AUTHENTICATED
U.S. GOVERNMENT
INFORMATION
GPO

FEDERAL REGISTER

Vol. 85 Tuesday,
No. 213 November 3, 2020

Pages 69465–70026

OFFICE OF THE FEDERAL REGISTER

The **FEDERAL REGISTER** (ISSN 0097–6326) is published daily, Monday through Friday, except official holidays, by the Office of the Federal Register, National Archives and Records Administration, under the Federal Register Act (44 U.S.C. Ch. 15) and the regulations of the Administrative Committee of the Federal Register (1 CFR Ch. I). The Superintendent of Documents, U.S. Government Publishing Office, is the exclusive distributor of the official edition. Periodicals postage is paid at Washington, DC.

The **FEDERAL REGISTER** provides a uniform system for making available to the public regulations and legal notices issued by Federal agencies. These include Presidential proclamations and Executive Orders, Federal agency documents having general applicability and legal effect, documents required to be published by act of Congress, and other Federal agency documents of public interest.

Documents are on file for public inspection in the Office of the Federal Register the day before they are published, unless the issuing agency requests earlier filing. For a list of documents currently on file for public inspection, see *www.federalregister.gov.*

The seal of the National Archives and Records Administration authenticates the Federal Register as the official serial publication established under the Federal Register Act. Under 44 U.S.C. 1507, the contents of the **Federal Register** shall be judicially noticed.

The **Federal Register** is published in paper and on 24x microfiche. It is also available online at no charge at *www.govinfo.gov*, a service of the U.S. Government Publishing Office.

The online edition of the **Federal Register** is issued under the authority of the Administrative Committee of the Federal Register as the official legal equivalent of the paper and microfiche editions (44 U.S.C. 4101 and 1 CFR 5.10). It is updated by 6:00 a.m. each day the **Federal Register** is published and includes both text and graphics from Volume 1, 1 (March 14, 1936) forward. For more information, contact the GPO Customer Contact Center, U.S. Government Publishing Office. Phone 202-512-1800 or 866-512-1800 (toll free). E-mail, *gpocusthelp.com.*

The annual subscription price for the **Federal Register** paper edition is $860 plus postage, or $929, for a combined **Federal Register, Federal Register** Index and List of CFR Sections Affected (LSA) subscription; the microfiche edition of the **Federal Register** including the **Federal Register** Index and LSA is $330, plus postage. Six month subscriptions are available for one-half the annual rate. The prevailing postal rates will be applied to orders according to the delivery method requested. The price of a single copy of the daily **Federal Register,** including postage, is based on the number of pages: $11 for an issue containing less than 200 pages; $22 for an issue containing 200 to 400 pages; and $33 for an issue containing more than 400 pages. Single issues of the microfiche edition may be purchased for $3 per copy, including postage. Remit check or money order, made payable to the Superintendent of Documents, or charge to your GPO Deposit Account, VISA, MasterCard, American Express, or Discover. Mail to: U.S. Government Publishing Office—New Orders, P.O. Box 979050, St. Louis, MO 63197-9000; or call toll free 1-866-512-1800, DC area 202-512-1800; or go to the U.S. Government Online Bookstore site, see *bookstore.gpo.gov.*

There are no restrictions on the republication of material appearing in the **Federal Register.**

How To Cite This Publication: Use the volume number and the page number. Example: 85 FR 12345.

Postmaster: Send address changes to the Superintendent of Documents, Federal Register, U.S. Government Publishing Office, Washington, DC 20402, along with the entire mailing label from the last issue received.

SUBSCRIPTIONS AND COPIES

PUBLIC

Subscriptions:

Paper or fiche	**202–512–1800**
Assistance with public subscriptions	**202–512–1806**

General online information **202–512–1530; 1–888–293–6498**

Single copies/back copies:

Paper or fiche	**202–512–1800**
Assistance with public single copies	**1–866–512–1800 (Toll-Free)**

FEDERAL AGENCIES

Subscriptions:

Assistance with Federal agency subscriptions:

Email	*FRSubscriptions@nara.gov*
Phone	**202–741–6000**

The Federal Register Printing Savings Act of 2017 (Pub. L. 115-120) placed restrictions on distribution of official printed copies of the daily **Federal Register** to members of Congress and Federal offices. Under this Act, the Director of the Government Publishing Office may not provide printed copies of the daily **Federal Register** unless a Member or other Federal office requests a specific issue or a subscription to the print edition. For more information on how to subscribe use the following website link: *https://www.gpo.gov/frsubs.*

Printed on recycled paper.

Contents

Federal Register

Vol. 85, No. 213

Tuesday, November 3, 2020

Agriculture Department
See Animal and Plant Health Inspection Service
NOTICES
Agency Information Collection Activities; Proposals, Submissions, and Approvals, 69564

Alcohol and Tobacco Tax and Trade Bureau
NOTICES
Agency Information Collection Activities; Proposals, Submissions, and Approvals, 69680–69684

Animal and Plant Health Inspection Service
NOTICES
Petition for the Determination of Nonregulated Status for Insect Resistant and Herbicide-Tolerant Maize:
Pioneer Hi-Bred International, Inc., 69564–69566

Antitrust Division
NOTICES
Proposed Final Judgment and Competitive Impact Statement:
United States, et al. v. Waste Management, Inc., et al., 70004–70026

Army Department
NOTICES
Meetings:
Western Hemisphere Institute for Security Cooperation; Board of Visitors, 69605–69606

Bureau of Consumer Financial Protection
RULES
Policy on Applications for Early Termination of Consent Orders, 69482–69485
NOTICES
Meetings:
Academic Research Council, 69605
Community Bank Advisory Council, 69604–69605
Consumer Advisory Board Meeting, 69604
Credit Union Advisory Council, 69603–69604

Census Bureau
NOTICES
Agency Information Collection Activities; Proposals, Submissions, and Approvals:
Annual Survey of School System Finances, 69566–69567

Centers for Medicare & Medicaid Services
PROPOSED RULES
Basic Health Program:
Federal Funding Methodology for Program Year 2022, 69525–69539

Children and Families Administration
NOTICES
Agency Information Collection Activities; Proposals, Submissions, and Approvals:
Formative Data Collections for Research and Evaluation, 69627–69628

Civil Rights Commission
NOTICES
Meetings:
South Carolina Advisory Committee, 69566

Coast Guard
NOTICES
Environmental Impact Statements; Availability, etc.:
Mariana Islands Training and Testing, 69634–69636

Commerce Department
See Census Bureau
See International Trade Administration
See National Institute of Standards and Technology
See National Oceanic and Atmospheric Administration
See Patent and Trademark Office
NOTICES
Performance Review Board Membership:
Economic Development Administration; National Telecommunications and Information Administration; Bureau of Industry and Security; Minority Business Development Agency, 69568
Performance Review Board; Membership, 69567–69568

Commodity Futures Trading Commission
RULES
Cross-Border Application of the Registration Thresholds and Certain Requirements Applicable to Swap Dealers and Major Swap Participants; Correction, 69498–69499
NOTICES
Privacy Act; Systems of Records, 69601–69603

Defense Department
See Army Department

Education Department
See National Assessment Governing Board

Employee Benefits Security Administration
NOTICES
Meetings:
Advisory Council on Employee Welfare and Pension Benefit Plans, 69647–69648

Energy Department
See Energy Information Administration
See Federal Energy Regulatory Commission
NOTICES
Agency Information Collection Activities; Proposals, Submissions, and Approvals, 69607–69609

Energy Information Administration
NOTICES
Agency Information Collection Activities; Proposals, Submissions, and Approvals, 69609

Environmental Protection Agency
RULES
Findings of Failure to Submit State Implementation Plans Required for Attainment of the 2010 1-Hour Primary Sulfur Dioxide National Ambient Air Quality Standard, 69504–69508

National Emission Standards for Hazardous Air Pollutants:
Phosphoric Acid Manufacturing, 69508–69512
Pesticide Tolerances:
Dipropylene Glycol and Triethylene Glycol; Exemption, 69512–69514

Executive Office for Immigration Review
RULES
Organization of the Executive Office for Immigration Review, 69465–69482

Federal Aviation Administration
RULES
Airworthiness Directives:
Airbus Helicopters, 69488–69492
Airbus Helicopters Deutschland GmbH, 69493–69496
Bell Textron Inc. (Type Certificate Previously Held by Bell Helicopter Textron Inc.) Helicopters, 69485–69488
Pilatus Aircraft Ltd. Airplanes, 69492–69493
Polskie Zaklady Lotnicze Sp. z o.o Airplanes, 69496–69498
PROPOSED RULES
Airworthiness Directives:
Dassault Aviation Airplanes, 69519–69525

Federal Communications Commission
RULES
Facilitating Shared Use in the 3100–3550 MHz Band; Correction, 69515
NOTICES
Agency Information Collection Activities; Proposals, Submissions, and Approvals, 69622–69625
Meetings:
Technological Advisory Council, 69624

Federal Emergency Management Agency
NOTICES
Adjustment of Disaster Grant Amounts, 69639–69640
Flood Hazard Determinations; Changes, 69636–69638
Flood Hazard Determinations; Proposals, 69638–69639

Federal Energy Regulatory Commission
NOTICES
Application:
Natural Gas Pipeline Co. of America, LLC, 69619–69620
Combined Filings, 69615–69618
Complaint:
Californians for Green Nuclear Power, Inc. v. North American Electric Reliability Corporation, Western Electricity Coordinating Council, California Independent System Operator Corporation, et al., 69620–69621
Designation of Certain Commission Personnel as Non–Decisional:
Nevada Irrigation District, 69615
Environmental Impact Statements; Availability, etc.:
Southern Star Central Gas Pipeline, Inc.; Lines DT And DS Replacement Project Amendment, 69611–69615
Initial Market-Based Rate Filings Including Requests for Blanket Section 204 Authorizations:
Centrica Business Solutions Optimize, LLC, 69621–69622
Nutmeg Solar, LLC, 69610–69611
Rancho Seco Solar, LLC, 69621
Suncor Energy Marketing, Inc., 69611
Records Governing Off-the-Record Communications, 69615
Request for Extension of Time:
Spire Storage West, LLC, 69609–69610

Federal Motor Carrier Safety Administration
NOTICES
Agency Information Collection Activities; Proposals, Submissions, and Approvals, 69678–69680
Qualification of Drivers; Exemption Applications:
Hearing, 69677–69678

Federal Railroad Administration
RULES
Texas Central Railroad High-Speed Rail Safety Standards, 69700–69776

Federal Reserve System
NOTICES
Change in Bank Control:
Acquisitions of Shares of a Bank or Bank Holding Company, 69625–69626

Federal Trade Commission
NOTICES
Agency Information Collection Activities; Proposals, Submissions, and Approvals, 69626–69627

Fish and Wildlife Service
RULES
Endangered and Threatened Species:
Removing the Gray Wolf (Canis lupus) from the List of Endangered and Threatened Wildlife, 69778–69895
PROPOSED RULES
Endangered and Threatened Species:
Canoe Creek Clubshell and Designation of Critical Habitat, 69540–69563
NOTICES
Meetings:
Aquatic Nuisance Species Task Force, 69641–69642

Foreign Assets Control Office
NOTICES
Blocking or Unblocking of Persons and Properties, 69684–69687

General Services Administration
NOTICES
Agency Information Collection Activities; Proposals, Submissions, and Approvals:
Ombudsman Inquiry/Request Instrument, 69627

Health and Human Services Department
See Centers for Medicare & Medicaid Services
See Children and Families Administration
See Health Resources and Services Administration
See National Institutes of Health
NOTICES
Review and Revision of the Screening Framework Guidance for Providers of Synthetic Double-Stranded DNA, 69630–69632

Health Resources and Services Administration
NOTICES
Agency Information Collection Activities; Proposals, Submissions, and Approvals:
Federal Tort Claims Act Program Deeming Sponsorship Application for Free Clinics, 69628–69629
National Vaccine Injury Compensation Program:
Revised Amount of the Average Cost of a Health Insurance Policy, 69629–69630

Homeland Security Department
See Coast Guard

See Federal Emergency Management Agency

Housing and Urban Development Department
NOTICES
Agency Information Collection Activities; Proposals, Submissions, and Approvals:
Conditional Commitment/Direct Endorsement Statement of Appraised Value, 69640
Public Housing Agency Lease and Grievance Requirements, 69640–69641
Removal and Archiving of Additional Obsolete and Superseded Guidance Documents, 69940–70001

Institute of Museum and Library Services
NOTICES
Agency Information Collection Activities; Proposals, Submissions, and Approvals:
IMLS Grants to States Program Five-Year State Plan Guidelines for State Library Administrative Agencies, 69649–69650

Interior Department
See Fish and Wildlife Service
See Land Management Bureau

Internal Revenue Service
RULES
Deduction for Foreign-Derived Intangible Income and Global Intangible Low-Taxed Income; Correction, 69500–69501
NOTICES
Agency Information Collection Activities; Proposals, Submissions, and Approvals, 69687–69696

International Trade Administration
NOTICES
Antidumping or Countervailing Duty Investigations, Orders, or Reviews:
Certain Steel Nails from the Republic of Korea, 69576–69579
High Pressure Steel Cylinders from the People's Republic of China, 69579–69580
Initiation of Five-Year (Sunset) Reviews, 69585–69586
Opportunity to Request Administrative Review, 69586–69588
Determination of Sales at Less Than Fair Value:
Mattresses from Cambodia, 69594–69597
Mattresses from Indonesia, 69597–69599
Mattresses from Malaysia, 69574–69576
Mattresses from Thailand, 69568–69571
Mattresses from the Republic of Turkey, 69571–69574
Mattresses from the Serbia, 69589–69591
Mattresses from the Socialist Republic of Vietnam, 69591–69594
Initiation of Less-Than-Fair-Value Investigations:
Thermal Paper from Germany, Japan, the Republic of Korea, and Spain, 69580–69584

International Trade Commission
NOTICES
Investigations; Determinations, Modifications, and Rulings, etc.:
Commodity Matchbooks from India, 69643
Polyester Textured Yarn from Indonesia, Malaysia, Thailand, and Vietnam, 69643–69644
Prestressed Concrete Steel Wire Strand from Brazil, India, Japan, Korea, Mexico, and Thailand, 69643

Justice Department
See Antitrust Division
See Executive Office for Immigration Review
RULES
Organization of the Executive Office for Immigration Review, 69465–69482
NOTICES
Agency Information Collection Activities; Proposals, Submissions, and Approvals:
Hate Crime Incident Report, 69646–69647
Registrant Record of Controlled Substances Destroyed, 69647
Proposed Consent Decree:
CERCLA, 69645
CERCLA; Extension of Comment Period, 69645–69646
Clean Air Act, 69644–69645

Labor Department
See Employee Benefits Security Administration
See Veterans Employment and Training Service

Land Management Bureau
NOTICES
Plats of Survey:
Idaho, 69642–69643
Oregon; Washington, 69642

National Aeronautics and Space Administration
NOTICES
Meetings:
Planetary Science Advisory Committee, 69649

National Assessment Governing Board
NOTICES
Meetings:
National Assessment Governing Board, 69606–69607

National Foundation on the Arts and the Humanities
See Institute of Museum and Library Services

National Highway Traffic Safety Administration
RULES
Anthropomorphic Test Devices:
Q3s 3-Year-Old Child Side Impact Test Dummy, 69898–69938

National Institute of Standards and Technology
NOTICES
Federal Information Processing Standard, 69599–69600

National Institutes of Health
NOTICES
Meetings:
Center for Scientific Review, 69632–69634
Eunice Kennedy Shriver National Institute of Child Health and Human Development, 69634

National Oceanic and Atmospheric Administration
RULES
Fisheries of the Exclusive Economic Zone off Alaska:
Exchange of Flatfish in the Bering Sea and Aleutian Islands Management Area, 69517–69518
Modification of Deadlines under the Fish and Fish Product Import Provisions of the Marine Mammal Protection Act, 69515–69517
NOTICES
Meetings:
Ocean Exploration Advisory Board, 69600–69601

National Science Foundation
NOTICES
Meetings:
Advisory Committee for Mathematical and Physical Sciences, 69650
Astronomy and Astrophysics Advisory Committee, 69651
Proposal Review Panel for Physics, 69650–69651

Nuclear Regulatory Commission
NOTICES
Applications and Amendments to Facility Operating Licenses and Combined Licenses Involving No Significant Hazards Considerations, 69651–69659
Applications and Amendments to Facility Operating Licenses and Combined Licenses Involving Proposed No Significant Hazards Considerations and Containing Sensitive Unclassified Non-Safeguards Information and Order Imposing Procedures for Access to Sensitive Unclassified Non-Safeguards Information, 69660–69664
Environmental Impact Statements; Availability, etc.:
Virginia Electric and Power Co.; North Anna Power Station, Unit Nos. 1 and 2, Correction, 69665–69666
Meetings; Sunshine Act, 69665

Patent and Trademark Office
RULES
International Trademark Classification Changes, 69501–69504

Postal Service
NOTICES
Meetings; Sunshine Act, 69666–69667

Securities and Exchange Commission
RULES
Adoption of Updated Electronic Data Gathering, Analysis, and Retrieval System Filer Manual, 69499–69500
NOTICES
Meetings; Sunshine Act, 69671
Self-Regulatory Organizations; Proposed Rule Changes:
Cboe BZX Exchange, Inc., 69675
Cboe Exchange, Inc., 69667–69671
MEMX LLC, 69671–69675

Small Business Administration
NOTICES
Major Disaster Declaration:
Louisiana, 69675

Surface Transportation Board
NOTICES
Abandonment Exemption:
Norfolk Southern Railway Co., Bergen County, NJ, 69676–69677
Agency Information Collection Activities; Proposals, Submissions, and Approvals:
Rail Service Data, 69675–69676

Transportation Department
See Federal Aviation Administration
See Federal Motor Carrier Safety Administration
See Federal Railroad Administration
See National Highway Traffic Safety Administration

Treasury Department
See Alcohol and Tobacco Tax and Trade Bureau
See Foreign Assets Control Office
See Internal Revenue Service

Veterans Affairs Department
NOTICES
Agency Information Collection Activities; Proposals, Submissions, and Approvals:
Authorization to Disclose Personal Information to a Third Party, 69696–69697
Statement of Dependency of Parent(s), 69696

Veterans Employment and Training Service
NOTICES
Agency Information Collection Activities; Proposals, Submissions, and Approvals:
Honoring Investments in Recruiting and Employing American Veterans Medallion Program, 69648

Separate Parts In This Issue

Part II
Transportation Department, Federal Railroad Administration, 69700–69776

Part III
Interior Department, Fish and Wildlife Service, 69778–69895

Part IV
Transportation Department, National Highway Traffic Safety Administration, 69898–69938

Part V
Housing and Urban Development Department, 69940–70001

Part VI
Justice Department, Antitrust Division, 70004–70026

Reader Aids

Consult the Reader Aids section at the end of this issue for phone numbers, online resources, finding aids, and notice of recently enacted public laws.

To subscribe to the Federal Register Table of Contents electronic mailing list, go to https://public.govdelivery.com/accounts/USGPOOFR/subscriber/new, enter your e-mail address, then follow the instructions to join, leave, or manage your subscription.

CFR PARTS AFFECTED IN THIS ISSUE

A cumulative list of the parts affected this month can be found in the Reader Aids section at the end of this issue.

8 CFR
1001 69465
1003 69465
1292 69465

12 CFR
Ch. X 69482

14 CFR
39 (5 documents) 69485, 69488, 69492, 69493, 69496

Proposed Rules:
39 (2 documents) 69519, 69522

17 CFR
23 69498
232 69499

26 CFR
1 69500

28 CFR
0 69465

37 CFR
6 69501

40 CFR
52 69504
63 69508
180 69512

42 CFR

Proposed Rules:
600 69525

47 CFR
2 69515
90 69515
97 69515

49 CFR
299 69700
572 69898

50 CFR
17 69778
216 69515
679 69517

Proposed Rules:
17 69540

Rules and Regulations

Federal Register

Vol. 85, No. 213

Tuesday, November 3, 2020

This section of the FEDERAL REGISTER contains regulatory documents having general applicability and legal effect, most of which are keyed to and codified in the Code of Federal Regulations, which is published under 50 titles pursuant to 44 U.S.C. 1510.

The Code of Federal Regulations is sold by the Superintendent of Documents.

DEPARTMENT OF JUSTICE

28 CFR Part 0

Executive Office for Immigration Review

8 CFR Parts 1001, 1003, and 1292

[EOIR Docket No. 18–0502; A.G. Order No. 4874–2020]

RIN 1125–AA85

Organization of the Executive Office for Immigration Review

AGENCY: Executive Office for Immigration Review, Department of Justice.

ACTION: Final rule.

SUMMARY: On August 26, 2019, the Department of Justice (''Department'') published an interim final rule (''IFR'') amending the regulations related to the internal organization of the Executive Office for Immigration Review (''EOIR''). The amendments reflected changes related to the establishment of EOIR's Office of Policy (''OP'') in 2017, made related clarifications or changes to the organizational role of EOIR's Office of the General Counsel (''OGC'') and Office of Legal Access Programs (''OLAP''), updated the Department's organizational regulations to align them with EOIR's regulations, made nomenclature changes to the titles of the members of the Board of Immigration Appeals (''BIA'' or ''Board''), provided for a delegation of authority from the Attorney General to the EOIR Director (''Director'') related to the efficient disposition of appeals, and clarified the Director's authority to adjudicate cases following changes to EOIR's Recognition and Accreditation Program (''R&A Program'') in 2017. This final rule responds to comments received and adopts the provisions of the IFR with some additional amendments: Restricting the authority of the Director regarding the further delegation of certain regulatory authorities, clarifying that the Director interprets relevant regulatory provisions when adjudicating recognition and accreditation (''R&A'') cases, and reiterating the independent judgment and discretion by which the Director will consider cases subject to his adjudication.

DATES: This rule is effective on November 3, 2020.

FOR FURTHER INFORMATION CONTACT: Lauren Alder Reid, Assistant Director, Office of Policy, Executive Office for Immigration Review, 5107 Leesburg Pike, Suite 2616, Falls Church, VA 22041, telephone (703) 305–0289 (not a toll-free call).

SUPPLEMENTARY INFORMATION:

I. Interim Final Rule: Summary and Authority

On August 26, 2019, the Department published an IFR amending the regulations related to the internal organization of EOIR. *See* Organization of the Executive Office for Immigration Review, 84 FR 44537 (Aug. 26, 2019).

A. Summary of Regulatory Changes

The IFR revised §§ 1001.1, 1003.0, 1003.1, 1003.108, 1292.6, 1292.11, 1292.12, 1292.13, 1292.14, 1292.15, 1292.16, 1292.17, 1292.18, 1292.19, and 1292.20 in title 8 of the Code of Federal Regulations (''CFR''), and §§ 0.115, 0.116, 0.117, and 0.118 in title 28 of the CFR.

1. Office of Policy

First, the IFR amended titles 8 and 28 of the CFR to reflect the establishment of EOIR's OP, which was created in 2017 to issue operational instructions and policy, administratively coordinate with other agencies, and provide for training to promote quality and consistency in adjudications. 84 FR at 44538. Prior to the IFR, EOIR's regulations outlined the functions of the majority of other EOIR components but did not include OP. The IFR added a new paragraph (e) to 8 CFR 1003.0 that provides the authority and responsibilities of OP. 84 FR at 44538, 44541; *see* 8 CFR 1003.0(e).

As part of the codification of OP in EOIR's regulations, the IFR also delineated OGC's authority regarding numerous EOIR programs and transferred some of OGC's programs to OP to ensure sufficient resources and to more appropriately align certain programs with their policymaking character. 84 FR at 44538–39; *see* 8 CFR 1003.0(e), (f).

2. Office of Legal Access Programs

To ensure proper functioning and support of EOIR's programs, the IFR transferred OLAP's responsibilities from the Office of the Director (''OOD'') to a division in OP. 84 FR at 44539. The Department determined that OLAP more appropriately belongs in OP, which has improved abilities to facilitate and coordinate OLAP's work across adjudicatory components in EOIR. *Id.* Accordingly, the IFR removed and reserved paragraphs (x) and (y) in 8 CFR 1001.1, which provided definitions for OLAP and the OLAP Director. 84 FR at 44541. The IFR also revised 8 CFR 1003.108 and 8 CFR part 1292 by replacing the phrases ''OLAP'' and ''OLAP Director'' with ''Office of Policy'' and ''Assistant Director for Policy (or the Assistant Director for Policy's delegate),'' respectively. 84 FR at 44542.

3. The Department's Regulations

The IFR sought to resolve inconsistencies between title 8 and title 28, CFR, regarding EOIR's organizational structure. 84 FR at 44537–38, 44539. The Department's general organizational regulations are located in 28 CFR part 0, subpart U. EOIR's current organizational structure is outlined in 8 CFR part 1003. Over time, these two titles were not updated consistently, such that 28 CFR part 0 was generally outdated. The IFR aligned these two titles, updated regulatory citations, and provided for the possibility for updates to title 8, thereby reducing the likelihood for future inconsistencies. 84 FR at 44539; *see generally* 8 CFR pt. 1003; 28 CFR pt. 0, subpt. U.

4. Board of Immigration Appeals

The IFR offered an alternate title for members of the BIA—in addition to being referred to as ''Board members,'' persons occupying those positions may also be referred to as ''Appellate Immigration Judges'' to better reflect the nature of their responsibilities. 84 FR at 44539; *see* 8 CFR 1003.1(a)(1). The Department believes the alternate title reflects the adjudicatory responsibilities those positions have for cases that the Attorney General designates to come before them. *See* 84 FR at 44539; *see*

also Authorities Delegated to the Director of the Executive Office for Immigration Review, the Chairman of the Board of Immigration Appeals, and the Chief Immigration Judge, 65 FR 81434, 81434 (Dec. 26, 2000) (acknowledging that the substantive and practical functions exercised by Board members are aptly described by the title ''Appellate Immigration Judge''). Relatedly, the IFR clarified in 8 CFR 1003.1(a)(2) and (4) that the Chairman of the BIA should also be known as the Chief Appellate Immigration Judge, a Vice Chairman of the BIA should also be known as a Deputy Chief Appellate Immigration Judge, and temporary Board members should also be known as temporary Appellate Immigration Judges. 84 FR at 44542; *see* 8 CFR 1003.1(a)(2), (4).

To provide more practical flexibility and efficiency in deciding appeals, the IFR delegated authority from the Attorney General to the Director to review certain cases from the BIA that have not been timely resolved. 84 FR at 44539–40; *see* 8 CFR 1003.1(e)(8)(ii). Specifically, the IFR amended 8 CFR 1003.1(e)(8)(ii) to provide that the Chairman shall either assign to himself or a Vice Chairman for final decision within 14 days any appeals that are not completed within the designated timelines, or he may refer such appeals to the Director (previously, the Attorney General) for decisions. 84 FR 44539–40. The Attorney General is delegating this authority to the Director because the Director is better situated, as the immediate supervisor of the BIA Chairman and the person in more direct, regular contact with the Chairman regarding pending cases, to ensure timely adjudication of these cases. *Id.* The Attorney General's delegation is necessary given the other obligations on the Attorney General's schedule and because the Director is better situated to ensure that procedures or changes are implemented so that untimely adjudications are rare. *See id.*

5. Other Authorities of the EOIR Director

The IFR sought to resolve tension between 8 CFR 1003.0(c), limiting the Director's authority to adjudicate or direct the adjudication of cases, and 8 CFR 1292.18, regarding the Director's authority to adjudicate requests for review of R&A Program determinations. 84 FR at 44540. When the Director was given authority under 8 CFR 1292.18, the limiting regulations at 8 CFR 1003.0(c) were not updated to reflect the change. *See* 84 FR at 44540; *see generally* Recognition of Organizations and Accreditation of Non-Attorney Representatives, 81 FR 92346 (Dec. 19, 2016). The IFR resolved this tension by updating 8 CFR 1003.0(c) to clarify that the limitation on adjudicatory authority is ''[e]xcept as provided by statute, regulation, or delegation of authority from the Attorney General, or when acting as a designee of the Attorney General.'' 8 CFR 1003.0(c).

B. Legal Authority for the Interim Final Rule

The Department issued the IFR pursuant to its authority under several statutory provisions. Generally, 5 U.S.C. 301 provides authority to department heads to issue regulations regarding, among other things, the governance of the department, employee conduct, and the distribution and performance of its business. More specifically, section 103(g) of the Immigration and Nationality Act (''INA'' or ''the Act'') (8 U.S.C. 1103(g)), provides authority to the Attorney General to establish regulations and to ''issue such instructions, review such administrative determinations in immigration proceedings, delegate such authority, and perform such other acts as the Attorney General determines to be necessary for carrying out [INA 103 (8 U.S.C. 1103)],'' which includes the immigration functions of EOIR.

The Homeland Security Act of 2002 (''HSA''), which added section 103(g) to the INA, further affirms the authority of the Attorney General over EOIR. *See* HSA, Public Law 107–296, tit. XI, secs. 1101, 1102, 116 Stat. 2135, 2273–74. Section 1101(a) of the HSA (6 U.S.C. 521(a)) states that ''the Executive Office for Immigration Review . . . shall be subject to the direction and regulation of the Attorney General under [INA 103(g)].''

Pursuant to this overarching regulatory authority, the Attorney General may amend the Department's regulations as necessary. In accordance with these authorities, the Attorney General promulgated the changes in the IFR.

II. Public Comments on the Interim Final Rule

A. Summary of Public Comments

The comment period associated with the IFR closed on October 25, 2019, with 193 comments received on the IFR.[1] Individual or anonymous commenters submitted 118 comments, and organizations, including non-government organizations, legal advocacy groups, non-profit organizations, and religious organizations, submitted 75 comments. A majority of individual commenters opposed the rule, while two supported the rule. All organizations expressed opposition to the rule.

Many, if not most, comments opposing the IFR either misstate its contents, proceed from an erroneous legal or factual premise, or contain internal logical inconsistencies. As the vast majority of comments in opposition fall within one of these three categories, the Department offers the following general responses to them, supplemented by more detailed, comment-specific responses in Part II.C of this preamble.

Several comments misstate the contents of the IFR. For example, many comments oppose the IFR because it allegedly eliminates OLAP, the Legal Orientation Program (''LOP''), and the Legal Orientation Program for Custodians of Unaccompanied Alien Children (''LOPC''), or changes the R&A Program.[2] However, the IFR makes clear that it does neither. *See* 84 FR at 44539 (''This rule is not intended to change—and does not have the effect of changing—any of OLAP's current functions.''); 8 CFR 1003.0(e)(3) (maintaining the R&A Program).

Several comments object to the idea that the IFR allows the Director to refer himself any case for review from the BIA at any time and under any circumstance. However, the IFR makes clear that cases would only be referred to the Director after the existing and longstanding regulatory deadline for adjudication by the Board has passed, which necessarily occurs only after briefing has been completed, the record is complete, and the case is ripe for decision. 84 FR at 44539–40 (''Accordingly, this rule delegates authority from the Attorney General to the Director to adjudicate BIA cases that *have otherwise not been adjudicated in a timely manner under the regulations,* based on a referral from the Chairman.'' (emphasis added)); 8 CFR 1003.1(e)(8) (setting timeliness benchmarks for Board adjudications which, if exceeded,

[1] The Department reviewed all 193 comments submitted in response to the rule; however, the Department did not post five of the comments to *https://www.regulations.gov* for public inspection. Of these comments, four were duplicates of another comment submitted by the same commenter, and one, which asked a specific visa-related question and provided a copy of a personal passport page, was unrelated to the IFR. Accordingly, the Department posted 188 comments.

[2] ''LOP'' is often used as an umbrella term to describe all of the legal access programs administered by OP: The general LOP, the LOPC, the LOPC National Call Center, the Immigration Court Help Desk, and the National Qualified Representatives Program. Unless otherwise indicated, all references to ''LOP'' herein refer to only the general LOP.

may warrant referral of cases to the Director for a timely adjudication).

Many comments are based on erroneous premises. For instance, many comments object to the IFR because the Director or the Assistant Director for Policy are allegedly political appointees. A political appointee is a full-time, non-career Presidential or Vice-Presidential appointee, a non-career Senior Executive Service (''SES'') (or other similar system) appointee, or an appointee to a position that has been excepted from the competitive service by reason of being of a confidential or policy-making character (Schedule C and other positions excepted under comparable criteria) in an executive agency. *See, e.g.,* Exec. Order 13770, sec. 2(b) (Jan. 28, 2017) (''Ethics Commitments by Executive Branch Appointees''); *see also* Edward ''Ted'' Kaufman and Michael Leavitt Presidential Transitions Improvements Act of 2015, Public Law 114–136, sec. 4(a)(4), (5) (2016). No employee currently at EOIR, including the Director or the Assistant Director for Policy, falls within these categories.

EOIR has no Schedule C positions or positions requiring appointment by the President or Vice President. Both the Director and the Assistant Director for Policy are career appointees within the SES. Although the Director is a general SES position, it has traditionally been filled only by a career appointee, and the incumbent Director serves through a career appointment. The Assistant Director for Policy is a career-reserved position in the SES and may be filled only by a career appointee. *See* SES Positions That Were Career Reserved During CY 2018, 85 FR 9524, 9581 (Feb. 19, 2020) (listing the Assistant Director for Policy at EOIR as a career reserved position). In short, all of EOIR's federal employees, including the Director and the Assistant Director for Policy, are career employees chosen through merit-based processes, and none of EOIR's employees are political appointees.[3]

Many comments object to the IFR by asserting that the Director is merely an administrator with no adjudicatory role and no subject matter expertise regarding immigration law. Longstanding regulations make clear, however, that the Director must have significant subject matter expertise in order to issue instructions and policy, including regarding the implementation of new legal authorities. *See* 8 CFR 1003.0(b)(1)(i). The Director must also administer an examination on immigration law to new immigration judges and Board members and must provide for ''comprehensive, continuing training'' in order to promote adjudicative quality. 8 CFR 1003.0(b)(1)(vi), (vii). Moreover, the Director was given explicit adjudicatory review authority involving R&A cases in January 2017, well before the IFR was promulgated. *See* 81 FR at 92357 (''Additionally, the final rule provides that organizations whose requests for reconsideration are denied may seek administrative review by the Director of EOIR. *See* final rule at 8 CFR 1292.18. This provision responds to concerns that OLAP would be the sole decision-maker regarding recognition and accreditation and that another entity should be able to review OLAP's decisions.''). In short, existing regulations already require some level of subject-matter knowledge by the Director and provide for the Director to have an adjudicatory role in addition to administrative duties. Thus, the IFR does not alter the nature of the Director position.

In addition, and consistent with the clarification in this final rule of the Director's adjudicatory role, the final rule edits potentially confusing regulatory language in 8 CFR 1292.6 to make clear that the Director, when conducting an administrative review of R&A cases under 8 CFR 1292.18, does interpret the regulatory provisions governing the R&A Program, 8 CFR 1292.11 through 1292.20. *See infra* Part III.

Some comments object to the IFR because it contains an alleged delegation of the Board's authority to the Director. However, the Director directs and supervises the Board, 8 CFR 1003.0(b)(1), and the Board cannot delegate authority upward to a manager. Moreover, the Board's authority comes from the Attorney General, and it is his authority to delegate, not the Board's. INA 103(g) (8 U.S.C. 1103(g)); 28 U.S.C. 509, 510. Accordingly, the IFR does not reflect a delegation of authority from the Board to the Director; it reflects a delegation of authority from the Attorney General to the Director.

In the aggregate, many of the comments are internally inconsistent or illogical. For example, some comments object to the placement of OLAP under the Office of Policy, alleging that OLAP should not be under a political appointee; yet, many of those comments also allege that the Director, who supervised OLAP for several years prior to its transfer to the Office of Policy and under whom OLAP would have remained if it had not been transferred, is a political appointee. Similarly, other comments that allege the Director is a political appointee also object to delegating authority from the Attorney General to the Director, paradoxically preferring to retain authority in the Attorney General, who is a political appointee, rather than in the Director, who is not, in fact, a political appointee.

Overall, and as discussed in more detail below, the Department generally declines to adopt the recommendations of comments that misstate the IFR, that are based on incorrect legal or factual premises, or that are internally or logically inconsistent.

B. Comments Expressing Support

Comment: Two commenters expressed support for the IFR for reasons unrelated to its substance. One commenter indicated support for building a border wall between the United States and Mexico and urged that other individuals go to Central America to improve living conditions there. Another commenter expressed general opposition to immigration.

Response: Such comments are beyond the scope of this rulemaking.

C. Comments Expressing Opposition

1. General Opposition to the IFR

Comment: The Department received several comments expressing general opposition to the IFR, with little to no further explanation. One commenter stated that such a ''pivotal'' topic requires deep discussion.

Response: The Department is unable to provide a more detailed response because these comments failed to articulate specific reasoning underlying expressions of general opposition.

[3] Most, if not all, of the comments opposing the IFR because the Director and the Assistant Director for Policy are alleged political appointees assume that any employee appointed to an agency position by an agency head, such as the Attorney General, is necessarily a political appointee. By statute, regulation, policy, or to comply with the Appointments Clause of the Constitution, approximately 530 positions at EOIR currently require appointment by the Attorney General, including Board members, immigration judges, and administrative law judges. The fact that the Attorney General, who is a political appointee, appoints an individual to a position does not convert that position to a political position.

Moreover, even if the Director position were filled by a political appointment, that fact alone would not render the individual a biased adjudicator incapable of adjudicating cases under the regulations. *Cf. Matter of L–E–A–,* 27 I&N Dec. 581, 585 (A.G. 2019) (rejecting arguments that the Attorney General is a biased adjudicator of immigration cases in the absence of any personal interest in the case or public statements about the case). After all, the functions of EOIR are vested in the Attorney General, who is a political appointee, and the INA specifically provides that determinations in immigration proceedings are subject to the Attorney General's review. 28 U.S.C. 503, 509, 510; INA 103(g) (8 U.S.C. 1103(g)).

2. Office of Legal Access Programs

a. Viability of OLAP and Its Programming

Comment: The Department received numerous comments opposing the transfer of OLAP and its responsibilities to OP. Commenters stated that transferring OLAP's current functions to OP and removing references to OLAP and OLAP's Director from the regulations effectively eliminates OLAP. One commenter expressed concern that the IFR transferred OLAP's functions to OP without ensuring that the Department will continue to prioritize the programs OLAP administers. Several commenters stated that because the IFR eliminated OLAP and because OP assumed OLAP's responsibilities, many of the programs administered by OLAP that ensure access to counsel are at risk of being eliminated.

Regarding specific programming, one commenter expressed concern that moving the R&A Program into OP would grant authority to the Assistant Director for Policy to make R&A Program determinations. This commenter stated that because the Assistant Director for Policy could be a political appointee, the objectivity of R&A Program determinations could be affected. Several organizations stated that they were concerned the IFR will weaken or lead to the dismantling of the LOP and the LOPC. One commenter asserted that if the LOPC is dissolved or mismanaged, children in immigration proceedings would be adversely affected because their understanding of the legal process would decrease. The commenter further asserted that affected children would lose access to justice and representation, which would increase failures to appear at initial court hearings.

A few commenters expressed concern that, based on ''the Office of Policy's recent history and relationship with migrants,'' moving OLAP under OP is ''a first step towards reducing access to counsel rather than expanding it.'' One commenter argued that placing OLAP in OP ''creates an incentive for OLAP to disseminate information that discourages certain individuals, deemed undesirable by the Executive Branch, from pursuing their legal rights.''

Response: The Department notes that any implication that the IFR eliminated OLAP or its functions is inaccurate, to include comments that a change in functions included a substantive change in the management of the R&A Program or the LOP. As the Department wrote in the IFR, this rule ''is not intended to change—and does not have the effect of changing—any of OLAP's current functions.'' 84 FR at 44539. The Department notes that OLAP's current functions continue as part of OP under the supervision of a member of the SES. *See Office of Legal Access Programs,* EOIR, U.S. Dep't of Justice, *https://www.justice.gov/eoir/office-of-legal-access-programs* (last updated Feb. 19, 2020).

OLAP (formerly known as the Legal Orientation and Pro Bono Program) has never been a separate component formally appearing on EOIR's official organizational chart. Rather, since its establishment in 2000, OLAP has existed under multiple different components within EOIR. *See* 84 FR at 44537. In 2000, OLAP existed as part of OOD; in 2002, it moved from OOD to OGC; in 2009, it moved from OGC to the BIA; and in 2011, it moved from the BIA back to OOD. *See id.* The IFR again moved OLAP within EOIR's organizational structure—this time to OP pursuant to the Department's reasoned analysis, as stated in the IFR, that OP is better suited to support OLAP. *See* 84 FR at 44539 (finding ''no organizational justification'' for OLAP to be part of OOD and determining that OP would be better suited to support OLAP's role and most effectively ''help coordinate OLAP's work across adjudicatory components''). The Department rejects the suggestion that OLAP's placement under OP would ''incentivize'' OLAP to engage in any action other than continuing its current missions, and the IFR—by its own terms—does nothing to change OLAP's functions.

Since the establishment of the R&A Program in 1984, multiple components have been responsible for maintaining it. From 1984 until 2017, the BIA ran the R&A Program.[4] *See* Requests for Recognition; Accreditation of Representatives, 49 FR 44084 (Nov. 2, 1984). In 2017, the Department transferred the R&A Program to OLAP, which at the time was a part of OOD. *See* 81 FR at 92347. In contrast to commenters' concerns that the R&A Program will be removed or limited, the IFR plainly requires OP to ''maintain a division within the Office of Policy to develop and administer a program to recognize organizations and accredit representatives to provide representation before [EOIR or DHS].'' 8 CFR 1003.0(e)(3).

In response to commenters' concerns that placing OLAP under the supervision of OP would undermine the objectivity of decisions regarding R&A Program determinations, the Department emphasizes that EOIR staff, including the Assistant Director for Policy, are career employees. OP is charged with making policy determinations as authorized by Congress and the Attorney General in furtherance of EOIR's mission. The Department has provided a more detailed discussion of OP as a neutral component within EOIR below. *See infra* Part II.C.3.c.

In response to commenters' concerns that the rule might undermine EOIR's LOP programs, the Department notes that the IFR did not alter any aspect of any LOP program and is not addressed to any particular aspect of LOP programs. It did not alter the mission, funding, or day-to-day operations of LOP programs, other than to reassign supervisory responsibilities over OLAP from the Director to the Assistant Director for Policy.

b. Elimination of OLAP and Effect on Individuals and Organizations

Comment: Several commenters indicated that moving OLAP to OP will have an adverse effect on their organizations' ability to provide competent, low-cost legal representation, which would in turn adversely affect individuals in immigration proceedings. Specifically, commenters alleged that the IFR either threatens to restrict or completely eliminates the R&A Program, without which organizations would have to reduce the services that are currently provided. Several commenters asserted that because the IFR dissolves OLAP, the IFR will harm children because they will have less meaningful access to effective legal representation during immigration proceedings. Commenters stated that without the R&A Program, thousands of low-income immigrants, including abused women and children, will lose access to legal advocates. One commenter stated that because of the possible loss in services, the rule undermines the key goals of non-profit immigration legal service organizations and the services they provide to low-income clients.

Response: As noted above, the IFR does not alter either OLAP's functions or the R&A Program. Further, the Department sees no connection between the move of OLAP to OP and any organization's abilities to provide competent, low-cost legal representation. It is not OLAP's mission to provide legal representation. Rather, one of its duties is to oversee the R&A Program, and supervision of OLAP's management of that program is now a duty of the Assistant Director of the Office of Policy rather than of the Director. In short, the IFR merely moved

[4] The Department notes that OLAP was part of the BIA for a portion of that period.

oversight of the R&A Program from one non-adjudicatory component of EOIR (OOD) to another (OP). Far from eliminating the R&A Program, the IFR clearly specified that OP will continue to maintain the program, including a mechanism for determining ''whether an organization and its representatives meet the eligibility requirements for recognition and accreditation in accordance with this chapter.'' 8 CFR 1003.0(e)(3).[5]

Also of note, the move of OLAP into OP, including the R&A Program, did not affect the regulatory criteria for recognizing an organization, 8 CFR 1292.11(a)(1)–(5), or accrediting a representative, 8 CFR 1292.12(a)(1)–(6). The only change was to authorize the Assistant Director for Policy to make such determinations based on the regulatory criteria. While the IFR provided the Assistant Director for Policy with the R&A Program authority by replacing ''OLAP Director'' with ''Assistant Director for Policy,'' the IFR further allowed the Assistant Director for Policy to delegate the authority to recognize an organization or accredit a representative. *See, e.g.,* 8 CFR 1292.11(a) (''or the Assistant Director for Policy's delegate''). At this time, such authority has been delegated to the OLAP Director. In sum, the IFR did not effectuate any substantive change to the R&A Program and certainly no change that would impact the ability of organizations to provide competent, low-cost legal representation.

3. Office of Policy

a. Legal Legitimacy

Comment: Numerous commenters stated, without more, that OP lacks legal legitimacy because it was created without regulatory or statutory authority. One commenter noted that OP was not created via notice and comment[6] and that there was not a press release or other information about its creation on the Department's website.

Response: Following a proposal by the Director, the Attorney General created OP in 2017 in accordance with all relevant statutory and regulatory authority. The Director has the authority to ''propose the establishment, transfer, reorganization or termination of major functions within his organizational unit as he may deem necessary or appropriate.'' 28 CFR 0.190(a). The Director proposed the creation of OP ''to, *inter alia,* issue operational instructions and policy, administratively coordinate with other agencies, and provide for training to promote quality and consistency in adjudications.'' 84 FR at 44538. The proposed EOIR reorganization received all necessary intermediate Department approvals. *See* 28 CFR 0.190(a). As the head of the Department, 28 U.S.C. 503, the Attorney General supervises and directs the administration and operation of the Department, and the Attorney General issued a new organizational chart for EOIR on July 26, 2017, approving EOIR's new organizational structure, which included OP. *See* EOIR, U.S. Dep't of Justice, *Executive Office for Immigration Review Organization Chart* (July 26, 2017), *https://www.justice.gov/eoir/eoir-organization-chart/chart.* When OP was created, the Department was required to reprogram appropriated funds. In accordance with the Consolidated Appropriations Act, 2017, and the Continuing Appropriations Act, 2018, the Department notified the House and Senate Committees on Appropriations of the change. *See* Consolidated Appropriations Act, 2017, Public Law 115–31, div. B, tit. V, sec. 505, 131 Stat. 135, 220 (2017) (''None of the funds provided under this Act . . . shall be available for obligation or expenditure through a reprogramming of funds that . . . (5) reorganizes or renames offices, programs or activities . . . unless the House and Senate Committees on Appropriations are notified 15 days in advance of such reprogramming of funds.''); Continuing Appropriations Act, 2018, Public Law 115–56, div. D, secs. 101(a)(2), 103, 131 Stat. 1139, 1139, 1141 (2017) (continuing appropriations for the Department under the same terms as the Consolidated Appropriation Act, 2017). Both committees indicated a lack of objection to the proposed reorganization in October 2017, and EOIR began to implement the reorganization in November 2017. The updated EOIR organizational chart was placed on the EOIR homepage on December 11, 2017.

The Department was not obligated to engage in rulemaking or a notice-and-comment period to create OP as a new component within EOIR. *See* 5 U.S.C. 553(b)(A) (providing that changes in internal agency organization are excepted from notice-and-comment requirements). In accordance with section 103(g) of the Act (8 U.S.C. 1103(g)), the Attorney General has delegated authority to the Director to manage the operations of EOIR. 8 CFR 1003.0(a), (b). Transferring authority from one office to another constitutes an internal operational change in line with the Director's operational management responsibilities under 8 CFR 1003.0(a) and (b). Moreover, the regulations are not meant to provide a complete, detailed description of the entirety of EOIR's organization, and the decision to memorialize some organizational changes by regulation does not mean that all internal organizational changes are required to be done through a regulation.[7]

b. Conflict With the Rule That Established the R&A Program

Comment: The Department received several comments stating that appointing the Assistant Director for Policy as head of OLAP and moving OLAP into OP directly contradicts the 2016 rule regarding authorization of representatives. *See* 81 FR at 92346. These commenters also averred that the move violated the intent and particular requirements of the 2016 rule, without providing specific concerns.

Response: Without further information regarding the specific conflicting provisions or specific concerns, the Department is unable to provide a more detailed response. The Department promulgated the 2016 rule to (1) provide requirements and procedures for authorized representatives to represent individuals before EOIR and DHS, and (2) revise EOIR's disciplinary procedures. *Id.* The Department clearly stated that the purpose of the 2016 rule was ''to promote the effective and efficient administration of justice before DHS and EOIR by increasing the availability of competent non-lawyer representation for underserved immigrant populations.'' Recognition of Organizations and Accreditation of Non-Attorney Representatives, 80 FR 59514, 59514 (Oct. 1, 2015) (notice of proposed rulemaking). The IFR did not conflict with that purpose; rather, the IFR furthered that purpose by making organizational changes within the agency that better facilitate efficiency and effectiveness across OLAP programs, including administration of the R&A Program. *See* 84 FR at 44537, 44539. Just as the Department moved the R&A Program from the BIA to OLAP in 2017, the Department's choice to now place authority over the R&A Program

[5] The Department notes that the instructions regarding the R&A Program in OP's regulations at 8 CFR 1003.0(e) are the same as those that were previously set out for OLAP in 1003.0(f)(2) with ''Assistant Director for Policy'' inserted instead of ''OLAP Director.''

[6] For further discussion on comments addressing notice-and-comment procedures, see the discussion in Part II.D.1 of this preamble.

[7] For example, the Department notes that OLAP was not memorialized in the regulations until 2017 even though it had existed since 2000 and been transferred among components multiple times. 84 FR at 44539.

with the Assistant Director for Policy was a decision of agency management or personnel and an organizational choice based on EOIR's needs.

c. Propriety of a Policy Office Within EOIR

Comment: Some commenters opposed the rule's ''formalization'' of OP because they generally opposed the existence of a policy office in EOIR. Commenters stated that OP ''conflicts with the fundamental mission of EOIR'' because its objectives and focus ''are controlled directly by the Attorney General and EOIR Director.'' Commenters believed that the creation of OP would change EOIR from an entity focused on impartial adjudications for individual immigration cases to, as one commenter explained, an ''extension of the Attorney General's and EOIR Director's immigration policy.'' Overall, commenters expressed concern that having OP within EOIR improperly politicizes the agency, whose mission is to adjudicate individual cases rather than make policy.

Response: The Department disagrees with commenters' statements that it is inappropriate for EOIR to have a policy office. EOIR's primary mission is the adjudication of immigration cases by fairly, expeditiously, and uniformly interpreting and administering the Nation's immigration laws, primarily pursuant to the Act. This mission remains unchanged by the IFR, and EOIR continues to work towards fulfilling this mission by increasing efficiencies wherever possible. Creating OP improved efficiency by reducing redundant activities performed by multiple components while also ensuring consistent coordination of regulatory and policy activities across all components.

OP was established to assist in effectuating the regulatory authorities granted to the Director such as issuing operational instructions and policy, administratively coordinating with other agencies, and providing for training to promote quality and consistency in adjudications. *See* 84 FR at 44538; 8 CFR 1003.0(b)(1). Some of these functions were previously performed by OGC, but were transferred to OP because of their policymaking nature and to ensure sufficient resources for those programs. 84 FR at 44538.

The non-adjudicatory policymaking functions now performed by OP are not new functions to the Department or to EOIR. The Department first explicitly codified the Attorney General's delegation of non-adjudicatory policymaking authority with respect to EOIR in the CFR in 2007, but such authority has existed throughout EOIR's history. *See* Authorities Delegated to the Director of the Executive Office for Immigration Review, and the Chief Immigration Judge, 72 FR 53673, 53676–77 (Sept. 20, 2007) (revising 8 CFR 1003.0 and 8 CFR 1003.9 to include policymaking authority). Since its inception in 1983, EOIR has implemented regulations, issued policy memoranda, and more generally engaged in policymaking in order to achieve its mission. *See, e.g.,* Office of the Chief Immigration Judge, EOIR, U.S. Dep't of Justice, *Operating Policies and Procedures 84–1: Case Priorities and Processing* (Feb. 6, 1984), *https://www.justice.gov/sites/default/files/eoir/legacy/2001/09/26/84-1.pdf.* EOIR is subject to the direction and regulation of the Attorney General, who may establish regulations or ''issue such instructions, review such administrative determinations in immigration proceedings, delegate such authority, and perform such other acts as the Attorney General determines to be necessary'' for the Attorney General's supervision of EOIR. 8 U.S.C. 1103(g).

Moreover, as discussed in Part II.A of this preamble, neither the Assistant Director for Policy nor the Director are political appointees. Instead, both positions, as well as all other EOIR senior leadership positions, are held by members of the SES serving on career appointments. The SES is composed of members who serve in key positions, operating and overseeing nearly every government function. *See generally Senior Executive Service,* Office of Personnel Management, *https://www.opm.gov/policy-data-oversight/senior-executive-service/* (last visited June 12, 2020). That the Attorney General continues to oversee the functions of EOIR is also proper: A long-held principle of administrative law is that an agency, within its congressionally delegated policymaking responsibilities, may ''properly rely upon the incumbent administration's view of wise policy to inform its judgments.'' *Chevron U.S.A. Inc.* v. *Nat. Res. Def. Council, Inc.,* 467 U.S. 837, 865 (1984).

The Department also notes that many other agencies include policy offices within their organizational structure—even when those agencies also perform adjudicatory functions. For example, the Social Security Administration, which conducts administrative hearings regarding appeals of benefits or program eligibility, has an Office of Financial Policy and Operations, an Office of Disability Policy, and an Office of Data Exchange, Policy Publications and International Negotiations. *See* U.S. Soc. Sec. Admin., *Social Security Administration Organizational Chart* (June 21, 2020), *https://www.ssa.gov/org/ssachart.pdf.* Similarly, the Department of Veterans Affairs includes adjudicatory components and an Office of Regulatory Policy and Management. *See* U.S. Dep't Vet. Aff., *2019 Functional Organizational Manual Version* 14–15 (Dec. 21, 2018), *https://www.va.gov/FOM-5-Final-July-2019.pdf.* In short, there is nothing anomalous or improper about EOIR maintaining an Office of Policy to address policy matters outside of the adjudicatory context.

d. Office of Policy's Expertise

Comment: Commenters specifically expressed opposition to the IFR's conferment of authority to the Assistant Director for Policy to oversee OLAP because commenters stated that the Assistant Director for Policy, and by extension OP, lacks the qualifications and expertise necessary to run OLAP and carry out its mission. Some commenters were concerned that, at the least, OLAP's commitment to ''improve the efficiency of immigration court hearings by increasing access to information and raising the level of representation for individuals appearing before the immigration courts and BIA'' would not remain a priority under OP's purview. Accordingly, commenters stated that moving OLAP and its legal access programs to OP was structurally ''irrational.'' Commenters stated that OLAP contains programmatic functions, not policy-related functions, and is thus outside the scope of the ''politicized'' Office of Policy, which is responsible for policy and regulations. Some commenters suggested that the Department should transfer OLAP back to the Office of the Director, where it more appropriately belongs.

Commenters specifically referenced OLAP's R&A Program, the National Qualified Representative Program (''NQRP''), and the LOP, all of which, they write, involve administering and managing congressionally appropriated funds and federal grants. Commenters stated that the Assistant Director for Policy, and a policy office generally, has no expertise in administering or managing such funds and grants. Commenters also specifically stated that OP lacks expertise and interest in fostering legal access and representation, which detrimentally impacts OLAP's programming (especially the R&A Program), the organizations involved, and the individuals served. Relatedly, commenters stated that the Assistant

Director for Policy lacks expertise in adjudicating R&A Program applications.

Response: As stated in the IFR, ''the rule is not intended to change—and does not have the effect of changing—any of OLAP's current functions.'' 84 FR at 44539. Moving OLAP to OP will ensure better programmatic management, provide for better coordination among EOIR's adjudicatory operations, and provide increased flexibility to fulfill OLAP's mission. *See id.* The Department is confident that OP is equipped to provide OLAP with the necessary resources and expertise to accomplish those initiatives.

Additionally, as stated above, the Assistant Director for Policy, who oversees OP, is a career-reserved SES position. *See* 85 FR at 9524. To be hired into these positions, members of the SES must possess the skills necessary to oversee and manage programmatic functions, such as those inherent to OLAP and identified by commenters. Moreover, when OLAP was housed in the Office of the Director, it was also supervised by a member of the SES serving on a career appointment—the Director. Thus, moving OLAP to OP neither places it under a political appointee nor diminishes its access to programmatic expertise or resources, and the Assistant Director for Policy is fully qualified to oversee such functions. At the same time, the Director continues to supervise every EOIR component, *see* 8 CFR 1003.0(b)(1), including OP. As such, OLAP ultimately remains subject to the direction of the Director even following its placement within OP. And, regardless of OLAP's ultimate placement, it remains free from any alleged direct political interference because all EOIR components are headed by career SES members, not political appointees.

Comment: One commenter explained that moving broad, policy-oriented tasks from OGC to OP prevents the Department from ''capitalizing on [OGC's] expertise[ ] and on OGC's extensive institutional knowledge.'' Similarly, another commenter stated that shifting responsibility for regulatory matters to OP ignores OGC's years of substantive expertise. That commenter also stated that the rule narrows OGC's role to focus almost exclusively on its role as legal counsel to the Director to the exclusion of its role in providing legal interpretation on substantive immigration policy matters.

Response: The EOIR General Counsel, under the supervision of the Director, serves as the chief legal counsel of EOIR for matters of immigration law. 8 CFR 1003.0(f). Following the IFR, OGC continues to oversee and perform many functions within EOIR, including employee discipline, ethics, anti-fraud efforts, practitioner discipline, privacy, Freedom of Information Act requests, and litigation support. *See id.; see also Office of the General Counsel,* EOIR, U.S. Dep't of Justice, *https://www.justice.gov/eoir/office-of-the-general-counsel* (last updated Aug. 13, 2018).

In recent years, OGC's work in performing these functions has grown increasingly more complicated. For example, in Fiscal Year 2018, EOIR received 52,432 FOIA requests, a nearly 100 percent increase from the total received in Fiscal Year 2014, when 26,614 were received. *See* U.S. Dep't of Justice, *United States Department of Justice Annual Freedom of Information Act Report: Fiscal Year 2018,* pt. V.A, *https://www.justice.gov/oip/page/file/1135751/download;* Dep't of Justice, *United States Department of Justice Annual Freedom of Information Act Report: Fiscal Year 2014,* pt. V.A, *https://www.justice.gov/sites/default/files/oip/pages/attachments/2014/12/24/oip-foia-fy14.pdf.*

Because of this increased scope of authority and responsibility, the Department moved the regulatory development and review authority from OGC into OP to ensure that sufficient resources are available across the offices for all of the agency's needs and to increase efficiency and streamline the policymaking process within EOIR. Additionally, the programs that were previously under OGC, such as regulatory development and review, involve a substantial policy role. To have functions of this nature in OGC is incongruous with OGC's goals of providing legal counsel to all of EOIR, including the three adjudicatory components. Transferring programs that have a heavy emphasis on policymaking from OGC into OP better permits OGC to focus on its role as general counsel to EOIR and better separates the division between legal counsel and policy choices while also increasing overall efficiency within EOIR's non-adjudicatory components.

Additionally, contrary to the commenter's suggestion, OGC's role has never been to provide legal interpretations on substantive matters of immigration law that would otherwise bind EOIR. To the contrary, under both the prior and the current regulation, OGC was excluded from supervisory activities related to the adjudication of cases and prohibited from influencing the adjudication of specific cases. The IFR simply clarified OGC's role on this point.

The Department further notes that although OP is a newly formed office within EOIR, the institutional knowledge and records from OGC remain within EOIR. OGC and OP have worked closely and continue to work closely to ensure that institutional knowledge is properly shared and resources remain available for all of EOIR's work.

4. Director's Authority

a. Due Process

Comment: Commenters expressed concern that the IFR undermined due process or contributed to an appearance of undermined due process. Commenters expressed general sentiment that the IFR was contrary to the Nation's tradition of due process, and commenters noted specific provisions that undermined due process or contributed to such appearance—namely, provisions that delegated authority to the Director to issue precedential decisions because such delegation is not an appropriate authority for the Director. *See* 8 CFR 1003.1(e)(8)(ii).

Response: Contrary to the commenters' concerns, the IFR's changes do not undermine due process. The essence of due process in an immigration proceeding is notice and an opportunity to be heard. *LaChance* v. *Erickson,* 522 U.S. 262, 266 (1998) (''The core of due process is the right to notice and a meaningful opportunity to be heard.''). Nothing in the rule eliminates notice of charges of removability against an alien, 8 U.S.C. 1229(a)(1), or the opportunity for the alien to make his or her case to an immigration judge, 8 U.S.C. 1229a(a), or on appeal, 8 CFR 1003.38.

Further, although due process requires a fair tribunal, *In re Murchison,* 349 U.S. 133, 136 (1955), generalized, ad hominem allegations of bias or impropriety are insufficient to ''overcome a presumption of honesty and integrity in those serving as adjudicators,'' *Withrow* v. *Larkin,* 421 U.S. 35, 47 (1975). Commenters identified no reason why it would be inappropriate for a career SES official with no pecuniary or personal interest in the outcome of immigration proceedings, such as the Director, to adjudicate appeals in specific circumstances, particularly since the Director had already been delegated adjudicatory authority through a prior rulemaking with no noted concerns regarding due process. *See* 8 CFR 1292.18; *cf. Matter of L–E–A–,* 27 I&N Dec. at 581, 585 (A.G. 2019) (rejecting arguments that the Attorney General is

a biased adjudicator of immigration cases in the absence of any personal interest in the case or public statements about the case).

Additionally, the Department notes that the Attorney General oversees EOIR and has statutory authority to, among other responsibilities, review administrative determinations in immigration proceedings; delegate authority; and perform other actions necessary to carry out the Attorney General's authority over EOIR. INA 103(g) (8 U.S.C. 1103(g)). Over time, the Attorney General has promulgated regulations pursuant to this statutory authority that reflect the full range of his authority and oversight in section 103(g) of the Act (8 U.S.C. 1103(g)). Among many examples, in 8 CFR 1003.1(h), the Attorney General codified the authority to review BIA decisions, and in 8 CFR 1003.0(a), the Attorney General delegated authority to the Director to head EOIR. Despite this delegated authority, EOIR remains subject to the Attorney General's oversight, and it is reasonable and proper that the Attorney General continue to exercise that oversight by way of administrative review.[8]

In accordance with 8 CFR 1003.0(a), the Director, who is appointed by the Attorney General, exercises delegated authority from the Attorney General related to oversight and supervision of EOIR. *See also* INA 103(g)(1) (8 U.S.C. 1103(g)(1)); 28 CFR 0.115(a). The Director may only act in accordance with the statutes and regulations and within the authority delegated to him by the Attorney General; put differently, the statute and regulations provide the Attorney General with the authority to act, and the Attorney General, in turn, determines the extent of the Director's authority. The Attorney General, by regulation, provides a list of the Director's authority and responsibilities at 8 CFR 1003.0(b), which includes the authority to ''[e]xercise such other authorities as the Attorney General may provide.'' 8 CFR 1003.0(b)(1)(ix). Such delegation supersedes the restrictions related to adjudication outlined in 8 CFR 1003.0(c) due to that paragraph's deference to 8 CFR 1003.0(b).

The Director's authority provided in the IFR to adjudicate BIA cases that have otherwise not been timely adjudicated constitutes ''such other authorities'' provided to the Director by the Attorney General, based on the powers to delegate and conduct administrative review under INA 103(g) (8 U.S.C. 1103(g)). *See* 8 CFR 1003.0(c); 8 CFR 1003.1(e)(8)(ii). To reiterate, the Attorney General's authority to review administrative determinations does not violate due process; thus, the proper delegation of that authority to the Director pursuant to statute and pre-existing regulations does not violate due process—specifically in light of the fact that those decisions ultimately remain subject to the Attorney General's review under 8 CFR 1003.1(e)(8)(ii). To the extent that commenters are concerned about such an appearance, the Department emphasizes the clear, direct intent of Congress in statutorily authorizing such delegations, and the Attorney General acted within the bounds of his statutory authority when he issued the IFR. INA 103(g)(2) (8 U.S.C. 1103(g)(2)); *see also Chevron,* 467 U.S. at 842.[9] In issuing the IFR, the Attorney General properly delegated adjudicatory authority to the Director to review certain administrative decisions that are otherwise untimely. 8 CFR 1003.1(e)(8)(ii). This delegation aligns with the Attorney General's longstanding authority to issue regulations and delegate that authority, in line with principles of due process.[10]

Comment: Commenters stated that the IFR is contrary to the immigration court system's traditions of the rule of law and due process. Commenters stated that the rule undermines the entire immigration system by threatening access to fair process and thus justice. Some commenters alleged this was in fact the purpose in issuing the IFR.

One commenter stated that the rule fails to provide constitutional protections that ensure due process, specifically that individuals lack ''standard procedural protections, such as notice and an opportunity to be heard'' if the Director selects an individual's case for adjudication. The commenter stated that, ''[i]n other words, an individual may have their case adjudicated by the Director (or his designee) at any stage in his or her immigration proceeding, without any prior notice that the Director (or his designee) is reviewing the case and without any opportunity to directly address the decisionmaker (either in a hearing or via briefing) regarding the adjudication.''

Another commenter specifically opposed the rule's delegation of certification power to the Director, explaining that such power exercised by the Attorney General was already problematic because it was ''generally driven by political decision making and a prosecutorial agenda.'' The commenter stated that extending that power to the Director only furthered the problems the commenter sees in the Attorney General's certification power. Another commenter stated that such power was unaccountable to the legislative and judicial branches of government, which also undermines democratic principles.

Response: The Department disagrees that the IFR undermined the rule of law and due process within the immigration court system. It does not restrict notice and an opportunity to be heard, and it does not threaten access to justice or fair process.

The agency continues to fairly, expeditiously, and uniformly interpret and administer the Nation's immigration laws. *See About the Office,* EOIR, U.S. Dep't of Justice, *https://www.justice.gov/eoir/about-office* (last updated Aug. 14, 2018). Immigration judges, Board members, the Director, and the Attorney General continue to exercise independent judgment and discretion in accordance with the case law, statutes, and regulations to decide each case before them. *See* 8 CFR 1003.10(b) (immigration judges), 1003.1(d)(1) (BIA members), 1003.1(e)(8)(ii) (Director and Attorney General), 1003.1(h) (Attorney General); *see also* INA 103(g)(1) (8 U.S.C. 1103(g)(1)). Further, the IFR did not affect the mechanisms previously provided for review—a respondent may still appeal a decision, in accordance with the statutes and regulations, from

[8] Numerous other agencies employ a similar structure and grant agency heads the authority to review administrative decisions. For example, the Department of the Interior (''DOI'') Office of Hearings and Appeals (''OHA'') uses three types of review boards for various matters before the agency, and the DOI OHA Director, as the authorized representative of the DOI Secretary, may participate in the consideration of appeals and sign the resulting decisions. *See* 43 CFR 4.1, 4.2(b). Similarly, the Secretary of Agriculture has delegated authority to a Judicial Officer to act as a final deciding officer in various adjudicatory proceedings within the Department of Agriculture. *See* 7 U.S.C. 2204–2; 7 CFR 2.35. The use of this general structure across agencies illustrates that it does not offend or undermine the tradition of due process.

[9] Further, even assuming that the congressional intent regarding the scope of the Attorney General's authority to delegate power is unclear, the Supreme Court has afforded *Chevron* deference to an agency's interpretation of an ambiguous statutory provision concerning the scope of the agency's statutory authority if the statute does not foreclose that interpretation. *See City of Arlington, Tex.* v. *FCC,* 569 U.S. 290, 296–97, 307 (2013) (''Where Congress has established a clear line, the agency cannot go beyond it; and where Congress has established an ambiguous line, the agency can go no further than the ambiguity will fairly allow.''). The INA does not foreclose the Attorney General's delegation of authority as articulated in the IFR; in fact, it provides that the Attorney General shall delegate such authority as he determines to be necessary to carry out the immigration functions of EOIR. INA 103(g)(2) (8 U.S.C. 1103(g)(2)).

[10] The Department notes that it received no complaints and has no record of any concerns being raised about due process when the Director was first delegated adjudicatory authority regarding R&A cases in 2017.

an immigration judge to the BIA. 8 CFR 1003.38. Cases may still be referred to the Attorney General. 8 CFR 1003.1(e)(8)(ii), (h). The IFR delegated authority to the Director to decide certain cases, but those decisions are subject to review by the Attorney General, either at the Director's or Attorney General's request. 8 CFR 1003.1(e)(8)(ii). Further, decisions of the BIA, the Director, and the Attorney General are each subject to review by federal courts of appeals. INA 242 (8 U.S.C. 1252).

As discussed in Part II.A of this preamble, the Director will only adjudicate cases on appeal that have exceeded regulatory deadlines, which would only occur after the record is complete, including the submission of briefs. Consequently, contrary to the comments, the Director cannot merely pick any case at all at any time for adjudication, and the alien whose case is referred to the Director will have already had the opportunity to brief any issues. The specified time period in 8 CFR 1003.1(e)(8)(ii), after which the Director may review a case, accounts for the timeframes in 8 CFR 1003.3(c)(1) and 1003.38 to file the Notice of Appeal (Form EOIR–26), briefs, and other documents. Accordingly, the Director would decide the case based on the same record that would have been before the BIA. Overall, respondents with cases before the Director, as provided in the IFR, retain the same rights and remain in the same situation as if their cases were before the BIA.

As stated in the preamble, given the heightened number of appeals filed and pending with the BIA and the decreased number of completions, the IFR sought to facilitate efficient dispositions of cases on appeal. 84 FR at 44538; *see also* EOIR, U.S. Dep't of Justice, *Adjudication Statistics: All Appeals Filed, Completed, and Pending* (Oct. 23, 2019), *https://www.justice.gov/eoir/page/file/1199201/download.* In addition to the IFR, recent agency initiatives demonstrate the agency's genuine commitment to efficiently addressing the BIA's pending caseload. *See* EOIR, U.S. Dep't of Justice, *Policy Memorandum 20–01: Case Processing at the Board of Immigration Appeals* (Oct. 1, 2019), *https://www.justice.gov/eoir/page/file/1206316/download* (explaining various agency initiatives, including an improved BIA case management system, issuance of performance reports, and a reiteration of EOIR's responsibility to timely and efficiently decide cases in serving the national interest).

The Department declines to adopt the specific request for ''notice that the Director (or his designee) is reviewing the case'' and ''opportunity to directly address the decision maker (either in a hearing or via briefing) regarding the adjudication.'' EOIR does not currently provide the identity of the specific Board member adjudicating a case prior to the issuance of a decision, and the identity of the adjudicator should be irrelevant to the outcome of the adjudication. Thus, providing notice that the Director will be the adjudicator serves no legitimate adjudicatory need to preserve due process and would constitute a significant departure from current practice. Further, as noted, the record will necessarily already be complete by the time the case is referred to the Director, and there is no operational or legal reason why a respondent would need to brief the same case twice before a decision is issued. In all cases, including those referred to the Director, EOIR will continue to uphold due process.

The Department also disagrees with the commenters' statements that the Attorney General's certification powers are politically motivated or unaccountable to other branches of government. First, the Attorney General's certification powers are statutorily authorized. *See* INA 103(g)(2) (8 U.S.C. 1103(g)(2)). Second, as the head of the Department with responsibilities that include oversight of EOIR, *see* INA 103(g)(1) (8 U.S.C. 1103(g)(1)); 8 CFR 1003.0(a); 28 CFR 0.115, it is reasonable for the Attorney General to be authorized to conduct administrative review. Further, the statute clearly provides for judicial review in section 242 of the Act (8 U.S.C. 1252), which includes the review of decisions by the Attorney General, thus providing accountability. Section 242 of the Act reiterates the non-political nature of the Attorney General's certification power: By providing for judicial review, Congress holds the agency accountable for fairly and uniformly interpreting and administering immigration law, in line with EOIR's mission. Accordingly, the Department disagrees that the IFR's delegation of authority to the Director to review certain cases further exacerbates the alleged problem of the Attorney General's certification power.

Comment: Commenters expressed concern over the IFR's adverse effects on judicial independence. Commenters stated that the following provisions in the IFR undermine or eliminate judicial independence: Delegating authority from the BIA [11] to the Director to review cases, imposing allegedly arbitrary deadlines on immigration judges to decide cases, and creating OP to develop agency rules and policies, which commenters allege will effectively decide cases. Commenters stated that these provisions threaten the issuance of fair, impartial adjudications.[12]

Commenters were concerned that transferring delegated adjudicatory power from the BIA to the Director to review cases threatens independent interpretation of immigration law. One commenter explained that the IFR effectively made the Director the chief judge and principal counsel for the Department. Another commenter expressed concern that the BIA Chairman will face pressure to refer cases to the Director, regardless of the reasons for delay, because the Director maintains a supervisory role over the Chairman and directs the Chairman's work. Further, commenters alleged that the rule eliminates deliberative review of appeals, curtailing review to a minimum and undermining the authority of BIA members. One of the commenters, objecting to the IFR's provisions relating to the Director's ability to intervene when BIA decisions exceed the permissible timeline, argued that ''decisions on complex appeals cases should not be rushed.''

Several commenters also stated that the judicial independence of immigration judges was undermined by the Department's imposition of ''arbitrary'' deadlines for case processing. Those deadlines, commenters stated, prioritize speed over accuracy, justice, and careful consideration. One commenter stated that he was opposed overall to the Department's ''attempts to weaken the independence of the immigration courts.'' Another commenter referenced ''the clear Congressional message'' that immigration judges ''should not and cannot be subservient to the interests of

[11] Commenters also expressed concern over adverse effects from delegating authority from OGC to the Director to review cases. The Department notes, however, that the IFR did not make any such change. OGC has never had the authority to advise on or supervise legal activities related to specific adjudications, which means OGC has never had the authority to adjudicate specific cases. The IFR instead merely clarified OGC's authority to reflect its longstanding, current role in advising on specific categories of issues but not specific adjudications. 84 FR at 44539–40; *see* 8 CFR 1003.0(f). Following the IFR, OGC continues to be the chief legal counsel of EOIR for specified matters.

[12] Commenters stated that, in turn, delegating authority to the Director undermines the independence of career adjudicators, which may harm children who are seeking asylum or other humanitarian protection. However, as discussed above, the Director occupies a career position, and the transfer of adjudicatory authority to him in 2017 has not threatened adjudications or undermined authority in the assessment of R&A cases.

an agency whose primary task is to expeditiously remove as many aliens as possible.'' Another commenter opposed the deadlines imposed on the BIA.

Commenters expressed concern over OP's influence on adjudicatory decisions. Specifically, commenters state that the office's development of rules, policies, guidance, and training would undermine immigration law and the abilities of immigration judges and BIA members to impartially adjudicate cases on a case-by-case basis. One commenter equated those rules, policies, guidance, and training to binding executive policy, and, relatedly, commenters stated that such provisions effectively allowed OP to decide cases. One commenter expressed concern that allowing OP to effectively decide cases erodes the separation between the executive and judicial branches of government.

Commenters expressed concern that the changes to 8 CFR 1003.0(c), which clarify that the INA, the regulations, or the Attorney General may delegate authority to the Director to adjudicate cases, in conjunction with the Director's authority at 8 CFR 1003.0(b)(2) to delegate authority to other EOIR employees, ''dramatically expands the list of individuals who may adjudicate individual immigration cases.''

One commenter stated that the IFR will result in arbitrary and unlawful restrictions on the meritorious claims of children seeking protection from harm. One organization stated that such restrictions would put children ''at risk of unsafe return to their home country in violation of the [Trafficking Victims Protection Reauthorization Act]'s provision requiring the safe repatriation of children.'' Further, commenters stated that the IFR's delegation of authority to the Director to intervene in BIA matters where the timeline for adjudication has been exceeded may undermine the independence of career adjudicators, thereby doing harm to the claims of children who are seeking asylum or other humanitarian protection.

Response: The Department disagrees that the IFR's delegation of authority to the Director to adjudicate certain BIA cases that have exceeded the regulatory parameter for timeliness threatens judicial independence for several reasons.

First, the IFR did not affect the ultimate review scheme for EOIR proceedings. The BIA may review appeals of immigration judge decisions, such as a final decision in removal proceedings under section 240 of the Act (8 U.S.C. 1229a) if either party files an appeal that complies with the requisite procedures. 8 CFR 1003.1(b)(3); *see also* 8 CFR 1003.3, 1003.38. The Attorney General may review a case in accordance with 8 CFR 1003.1(h), and federal courts may review decisions in accordance with section 242 of the Act, 8 U.S.C. 1252. The IFR revised this process only by delegating the authority previously provided to the Attorney General to the Director to review certain cases before the BIA that have otherwise not been timely adjudicated, and to ensure that such cases the Director reviews are also subject to final review by the Attorney General in the same manner as all other BIA appeals. 8 CFR 1003.1(e)(8)(ii).

In addition, the new regulatory provision specifically provides that the Director exercises ''authority . . . identical to that of the Board as described in this section,'' such that the Director must exercise the same independent judgment required for BIA members under 8 CFR 1003.1(d)(1)(ii). Any decisions by the Director are also subject to statutes, regulations, and case law, and his decisions, like BIA decisions, are ultimately reviewable by the Attorney General and the federal courts. Accordingly, the IFR does not threaten the fairness and impartiality of adjudications. Nevertheless, to address these concerns, the final rule makes changes to 8 CFR 1003.0(c) to provide in the regulations that the Director must exercise independent judgment and discretion when deciding cases. *See infra* Part III.

Because the IFR did not impose deadlines on immigration judges, comments that discussed immigration judge deadlines are not relevant to the rulemaking. Further, the IFR did not affect the BIA's timeline for deciding cases, which remains unchanged from the regulations pre-IFR.[13] *Compare* 8 CFR 1003.0(e)(8)(ii) (2018), *with* 8 CFR 1003.0(e)(8)(ii) (Aug. 26, 2019). The BIA continues to exercise independent judgment within the articulated timelines to decide cases in accordance with the ''authorities under the Act and the regulations as is appropriate and necessary for the disposition of the case.'' 8 CFR 1003.1(d)(1)(ii). Thus, the IFR did not eliminate, curtail, or rush the BIA's review and consideration of cases, as commenters alleged.

The Department disagrees that the IFR will pressure the BIA Chairman or Vice Chairman to refer cases to the Director; instead, the IFR provided the specific circumstances in which decisions shall be referred. *See* 8 CFR 1003.1(e)(8)(ii).

While the IFR provided authority to OP regarding regulatory and policy development in 8 CFR 1003.0(e), regulations and agency policy do not effectively decide cases as commenters alleged. Immigration judges, the BIA, the Director, and the Attorney General continue to exercise independent judgment to interpret and apply the INA, regulations, and case law. Regulations simply ''implement, interpret, or prescribe'' the INA but do not change the text of it. *See* 5 U.S.C. 551(4). Accordingly, even while implementing regulations interpreting the INA, OP does not decide cases or undermine the INA through its rulemaking authority.

The Department also notes that the IFR did not erode the separation between the executive and judicial branches of government because the judicial branch is not at issue—immigration courts are part of the executive branch within the Department, specifically EOIR. *See* 8 CFR pt. 1003, subpts. B, C.

Regarding concerns that the amendment to 8 CFR 1003.0(c), when read in conjunction with the Director's delegation authority in 8 CFR 1003.0(b), expands the EOIR employees authorized to adjudicate cases, the Department intends for only the Director, not other EOIR employees, to have the authority to adjudicate BIA decisions that exceed the established timelines. Nevertheless, the Department recognizes the potential for confusion and unintended consequences. Accordingly, to address the concern, the Department is making a change in this final rule to clarify that the adjudicatory authority of the Director cannot be redelegated to another employee.

Comment: Commenters opposed the rule's delegation of authority to the Director to issue precedential decisions. Many commenters alleged that the Director lacks expertise to issue precedential decisions. One commenter explained that ''adjudication authority should only ever be given to experienced immigration legal professionals who understand the weight of precedent-setting decisions, and these decisions' impacts on individual people's lives.'' Commenters stated that the Director's role was meant to be one of office administration rather than one that exercised adjudicatory

[13] The Department reprinted the entire paragraph 1003.1(e)(8)(ii), including the BIA's timelines, rather than only the changed language to ensure clarity of the amendments made in the entire section for publication in the **Federal Register** and to provide for the reader the relevant context of the amended unit. *See Document Drafting Handbook,* Office of the Federal Register, at 3–37, *www.archives.gov/federal-register/write/handbook* (last updated Aug. 9, 2019). The IFR did not change the BIA's timelines. *Compare* 8 CFR 1003.0(e)(8)(ii) (2018), *with* 8 CFR 1003.0(e)(8)(ii) (Aug. 26, 2019).

power. Further, commenters expressed specific opposition to transferring cases from immigration judges and the BIA, who both possess adjudicatory authority, to someone serving in an office administrator role.

Commenters alleged that such delegation vests broad, improper adjudicatory authority in a single individual, the Director, and described the rule as an ''extraordinary consolidation of powers in one individual who is not a judge and who is supposed to serve as an office administrator.'' Several commenters expressed that the ''stakes were too high'' to give final adjudicatory power to one person and that such authority undermines the fairness and impartiality that should characterize adjudications. Commenters expressed concern that the rule threatens the integrity of the system, thus creating uncertainty for respondents.

Response: As discussed earlier in this preamble, the Director is a career appointee within the SES, chosen through a merit-based process, and the position of Director requires a significant amount of subject-matter expertise regarding immigration laws. The Director is charged with, *inter alia,* directing and supervising each EOIR component in the execution of its duties under the Act, which include adjudicating cases; evaluating the performance of the adjudicatory components and taking corrective action as necessary; providing for performance appraisals for adjudicators, including a process for reporting adjudications that reflect poor decisional quality; ''[a]dminister[ing] an examination for newly-appointed immigration judges and Board members with respect to their familiarity with key principles of immigration law before they begin to adjudicate matters, and evaluat[ing] the temperament and skills of each new immigration judge or Board member within 2 years of appointment''; and ''[p]rovid[ing] for comprehensive, continuing training and support for Board members, immigration judges, and EOIR staff in order to promote the quality and consistency of adjudications.'' 8 CFR 1003.0(b)(1). Each of these responsibilities necessarily requires some manner of subject-matter expertise to carry out effectively. Moreover, since January 2017, the Director has been responsible for administratively reviewing certain types of denials of reconsideration requests in R&A cases, with no noted complaints that such a delegation of authority is inconsistent with the role of the Director. As discussed in Part II.A of this preamble, the Director's role is not purely administrative and contains limited adjudicatory responsibilities consistent with the legal and subject-matter expertise required for the position.

The Department also disagrees that the IFR vested broad or improper adjudicatory authority in one person or that it can be characterized as an ''extraordinary consolidation of power.''

First, the IFR delegated limited authority to the Director: ''in exigent circumstances . . . in those cases where the panel is unable to issue a decision within the established time limits, as extended, the Chairman shall either assign the case to himself or a Vice Chairman for final decision within 14 days or shall refer the case to the Director for decision.'' 8 CFR 1003.1(e)(8)(ii). The IFR replaced the Attorney General with the Director in 8 CFR 1003.1(e)(8)(ii) and merely delegated authority previously left with the Attorney General to the Director, subject to possible further review by the Attorney General. The Director may only adjudicate cases that have surpassed the articulated deadlines and that have not been assigned to the Chairman or a Vice Chairman for final adjudication. Clearly, the Director's scope of review is limited to only a narrow subset of EOIR cases.

Second, the INA authorizes such delegation. The propriety of the delegation is clear in section 103(g)(2) of the Act (8 U.S.C. 1103(g)(2)), which provides that ''the Attorney General shall . . . delegate such authority[ ] and perform such other acts as the Attorney General determines to be necessary for carrying out [INA 103 (8 U.S.C. 1103)],'' and is discussed further throughout Part II.C.4.a of this preamble.

Third, the Attorney General retains authority to review the Director's decisions, and judicial review continues to be available for administratively final decisions, in accordance with the statute. *See* 8 CFR 1003.1(e)(8)(ii); INA 242 (8 U.S.C. 1252). Thus, the IFR did not vest ''final'' authority in the Director, negating concerns that the IFR eliminated integrity and impartiality in the immigration system.

b. Political Concerns

Comment: Commenters expressed concern that the Director's decisions may be heavily influenced by the political climate or the ''President's anti-immigrant agenda.'' Commenters expressed specific concern over the political nature of the Director's role and its effect on fair adjudications. Commenters stated that the Director is a ''political appointee who is an administrator, not a judge.'' [14] Other commenters opposed the rule's delegation because the Director would act alone in issuing decisions, which they stated was ''problematic both for the visual it creates of an unjust system and for the very real possibility of a policy maker—the Director of EOIR—utilizing the power to adjudicate claims to effectuate policy.'' Another commenter echoed this sentiment, stating that delegating authority to an individual reporting to a political appointee creates the appearance of impropriety that undermines the immigration court system.

Response: The Department rejects the notion, and subsequent implications, that the Director acts in a political capacity. As previously stated, the Director is a career appointee of the SES, not a political appointee. The Department also notes that SES positions are specifically designed to ''provide for an executive system which is guided by the public interest and free from improper political interference.'' 5 U.S.C. 3131(13).

Accordingly, the Director does not encumber a political position, nor does the Director act in a political capacity. The Director, like members of the BIA, exercises independent judgment and discretion in accordance with the statutes and regulations to decide any case before him for decision pursuant to 8 CFR 1003.1(e)(8)(ii) due to the BIA's failure in that case to meet the established timelines. *See id.* (''[T]he Director shall exercise delegated authority from the Attorney General identical to that of the Board[.]''); *cf.* 8 CFR 1003.1(d)(1)(ii) (''Board members shall exercise their independent judgment and discretion in considering and determining the cases coming before the Board[.]''). EOIR's mission remains the same—to adjudicate cases in a fair, expeditious, and uniform manner. *See About the Office, supra.* The Director does not act outside of that mission or the governing statutes and regulations of EOIR.

Further, the Director's decisions are subject to review by the Attorney General, either at the Director's or Attorney General's request. 8 CFR 1003.1(e)(8)(ii). The Department disagrees with the commenter's concern regarding a politically appointed Attorney General's delegation of power to the Director creating the appearance of impropriety. Congress has specifically provided the Attorney General, a presidential appointee, with

[14] For further discussion on comments addressing the effect of political influence on the Director, see the discussion in Part II.A of this preamble.

broad powers regarding the immigration laws, and the statute explicitly allows for the Attorney General to delegate that power. INA 103(g)(2) (8 U.S.C. 1103(g)(2)). Concerns about this allocation of authority are best addressed to Congress.

5. Office of the General Counsel

Comment: The Department received several comments opposed to the rule's transfer of functions from OGC. Several commenters stated their opposition to the limitations placed on the functions and authority of OGC.[15]

Response: The Department appreciates the commenters' concerns. However, the Department believes that the transfer of certain OGC functions to OP was reasoned and appropriate.

As discussed above, the Director has the authority to ''propose the establishment, transfer, reorganization or termination of major functions within his organizational unit as he may deem necessary or appropriate.'' 28 CFR 0.190(a). The Attorney General, as the head of the Department, supervises and directs the administration of EOIR. 28 U.S.C. 503, 509, 510.

As reflected in the IFR, the Attorney General created OP to ''improve[ ] efficiency by reducing redundant activities performed by multiple components and ensure[ ] consistency and coordination of legal and policy activities across multiple components within EOIR.'' 84 FR at 44538. As a result, the rule transferred OGC functions that were policymaking in nature, namely regulatory development and review, from OGC into OP. *Id.; see* 8 CFR 1003.0(e)(1). It is the Department's judgment that including these policymaking functions in OP, and not in OGC or elsewhere in EOIR, is necessary for OP to be able to meet its mission and increase EOIR's efficiencies. Further, having policymaking functions within OGC is not fully congruent with OGC's role of providing legal counsel to all of EOIR, including the three adjudicatory components.

The IFR, however, did not otherwise limit the function or authority of OGC, which continues to perform a wide range of important roles for EOIR, including those related to employee discipline, ethics, anti-fraud efforts, practitioner discipline, privacy, Freedom of Information Act requests, records management, and litigation support. *See* 8 CFR 1003.0(f); *see also Office of the General Counsel, supra.* The IFR will ensure that OGC is able to devote sufficient resources to all of the programs for which it is responsible, particularly given the increased complexity and volume of its work in recent years. *See* 84 FR at 44538.

6. Policy Considerations

a. Political Motivations

Comment: Many commenters alleged that the rule is specifically purposed to advance a political agenda and politicize immigration adjudications. Commenters oppose the rule's transfer of cases to an alleged political appointee and the rule's empowerment of an allegedly politically controlled Office of Policy because those provisions allow political forces to influence and govern adjudications.

Some commenters alleged that OP was specifically created to advance an anti-immigrant political agenda through regulations and guidance. Accordingly, some commenters oppose the rule's moving of OLAP to OP as counterintuitive because OLAP works to expand legal access through the R&A Program, NQRP, and LOP, among others.

One commenter alleged that through the rule, the Director is attempting to rewrite immigration law to conform to particular political motives. Another commenter remarked that the ''delegation of judicial power to the unqualified Executive Director further stands at odds with the nomenclature change that outwardly enhances the esteem of the BIA. . . . These inconsistencies illustrate the arbitrary nature of the interim changes as a whole, and suggest ulterior motives.''

Response: As discussed above, all EOIR officials are career federal employees, not political appointees appointed for a particular presidential administration. Both the Director and the Assistant Director for Policy, as well as many other EOIR leadership positions, are members of the SES who occupy career appointments. Career SES officials serve as high-level managers in the federal government and work to further the public interest without political motivations. *See* 5 U.S.C. 3131(13).

As employees of the Department, however, all EOIR officials are subject to the supervision of the Attorney General, who is a political appointee of the President. *See* INA 103(g) (8 U.S.C. 1103(g)); 28 U.S.C. 503; *see also* 8 CFR 1003.0(a) (providing that EOIR is within the Department); 28 CFR 0.1 (same), 0.5(a) (providing that the Attorney General shall ''[s]upervise and direct the administration and operation of the Department of Justice''). The promulgation of this rule did not have any impact on the Attorney General's role as the ultimate supervisor of EOIR. *Cf. Matter of Castro-Tum,* 27 I&N Dec. 271, 281 (A.G. 2018) (discussing the Attorney General's ''well-established'' authority regarding the immigration laws).

As stated in the IFR, OP was established ''to assist in effectuating authorities given to the Director in 8 CFR 1003.0(b)(1), including the authority to, *inter alia,* issue operational instructions and policy, administratively coordinate with other agencies, and provide for training to promote quality and consistency in adjudications.'' 84 FR at 44538.

Further, the Department chose to locate OLAP within OP due to ''OLAP's role in effectuating EOIR's Nationwide Policy regarding procedural protections for detained aliens who may be deemed incompetent'' and to ''ensure[ ] an appropriate chain of command and better management of OLAP's programs, provide[ ] for better coordination of OLAP's functions within the broader scope of EOIR's adjudicatory operations, and allow[ ] for greater flexibility in the future regarding OLAP's mission.'' 84 FR at 44539. The Department continues to believe that OLAP is well-suited for placement in OP for these same reasons.

b. Justification for the Rule

Comment: Several commenters stated that the IFR ''lacks reasonable justification.''[16] Commenters compared the IFR to EOIR's alleged ''similar plan to eliminate OLAP's legal orientation programs in spring of 2018'' and averred that both the rule and the previous plan lacked reasonable justification. Commenters did not provide further discussion regarding their claim that the rule lacks reasonable justification.

Response: The Department continues to rely on the reasons articulated in the IFR. *See* 84 FR at 44538–40. All changes in the IFR were designed to further EOIR's mission.

[15] Other commenters averred that the delegation of OGC's responsibilities to the Director was unlawful. Commenters noted that the rule delegated decision-making authority to the Director on various matters previously handled by OGC; however, the commenters did not identify to which ''various matters'' they refer. Because the IFR did not delegate any authority or decision-making role from OGC to the Director, and did not alter the Director's supervisory authority over OGC, the Department does not discuss these concerns further in this final rule.

[16] Comments in this Part are distinguishable from comments described in Part II.D.2 of this preamble. Those comments alleged that the rule's arbitrary and capricious nature violates the Administrative Procedure Act (''APA''). These comments, however, do not mention the APA; rather, they briefly note that the rule ''lacks any reasonable justification'' but do not elaborate further.

c. Nation's Core Values

Comment: Commenters expressed opposition to the IFR, alleging that it undermines the immigration system, which, in turn, contradicts the Nation's core democratic principles of fair process, justice, access to legal representation, and rule of law. Commenters emphasized human dignity and expressed concern that the IFR adversely affects the Nation's system of laws and human lives. Commenters also stated that the IFR contradicts the nation's Christian and immigrant history.

Response: The Department recognizes that the United States government upholds certain core principles that are fundamentally and distinctly American, and the Department asserts that the IFR strengthens, not weakens, the Nation's immigration court system, and is thus aligned with America's core values. The IFR was designed to promote EOIR's primary mission of fairly, expeditiously, and uniformly interpreting and administering the Nation's immigration laws. For example, the IFR was designed to promote a more efficient disposition of cases at the administrative appeals level. 84 FR at 44539–40. Additionally, the IFR formalized the establishment of an Office of Policy, which is designed to improve efficiency by reducing redundancy within the agency and promoting consistent policy positions throughout EOIR. *Id.* at 44538. The rule also restructures EOIR by placing OLAP's duties under OP to ensure better management and facilitation of OLAP's programs within the bounds of relevant statues and regulations. *Id.* at 44539.

d. Efficiency Concerns

Comment: Numerous commenters stated that permitting the Director to adjudicate cases will not meaningfully address concerns about timely case adjudication. Commenters indicated that in allowing the Director to adjudicate pending cases before the BIA, the IFR did not address the root cause of the pending caseload before the BIA or attempt to increase the BIA's efficiency. One commenter stated that the Director would not have the time to adjudicate all BIA cases pending beyond the 90-day or 180-day adjudication deadlines and would therefore have to select which cases to adjudicate, thereby allowing the Director to interfere with the impartial BIA adjudication process. One commenter was concerned that delegating authority to adjudicate immigration cases would decrease the efficiency of the immigration system and degrade the public trust in the process.

Response: The Department has already undertaken several efficiency-focused initiatives for the BIA. *See, e.g., Policy Memorandum 20–01: Case Processing at the Board of Immigration Appeals, supra* (explaining various agency initiatives, including an improved BIA case management system, issuance of performance reports, and a reiteration of EOIR's responsibility to timely and efficiently decide cases in serving the national interest).

Addressing the root causes of the pending caseload is beyond the scope of this rulemaking; the IFR did not purport to solve every inefficiency or issue affecting timely case adjudications within the agency. Instead, the IFR is a tool that addresses one inefficiency that relates to particular case adjudications, as outlined in 8 CFR 1003.1(e)(8)(ii), by delegating authority to the Director to decide such cases.

The Department notes that attorneys and other staff at the BIA routinely assist Board members with research and analysis of cases pending before the BIA. The Director's handling of the subset of cases defined in this rule does not change the role of those staff to assist in such a manner. The Director, as the supervisor of all of EOIR, may seek assistance from such staff as well. Further, the Director has counsel from whom he may seek assistance within OOD. The Department is confident in the abilities of the Director and the BIA to timely adjudicate such cases in accordance with the regulations and statutes and, thus, disagrees with commenters' assertions that the Director lacks the time or capacity to fulfill this responsibility. This rule does not impose a requirement that the Director handle the cases, but provides for that possibility when needed and when it is reasonable and practicable for him to do so. Further, the Department has determined that, given other responsibilities and obligations, ''the Attorney General is not in a position to adjudicate any BIA appeal simply because it has exceeded its time limit for adjudication.'' 84 FR at 44539. Accordingly, the Department believes that the delegation of the Attorney General's authority over these cases to the Director increases efficiency within the agency and serves the national interest. *Cf.* Jefferson B. Sessions III, Attorney General, U.S. Dep't of Justice, *Memorandum for the Executive Office for Immigration Review: Renewing Our Commitment to the Timely and Efficient Adjudication of Immigration Cases to Serve the National Interest* (Dec. 5, 2017), *https://www.justice.gov/opa/press-release/file/1015996/download.*

e. Alternative Recommendations

Comment: Commenters stated that the IFR does not adequately address workload concerns at the BIA or the immigration courts. Several commenters stated that permitting the Director to adjudicate cases that have been pending before the BIA for more than 90 days is an inappropriate response to the workload issues currently affecting the BIA. Several commenters indicated that immigration law requires the expertise of an immigration judge; thus, commenters stated that hiring more immigration judges could address concerns regarding case processing times. One commenter also stated that the Department should hire more immigration judges rather than undermine the authority of the current immigration judges. Commenters proposed alternative solutions to address case processing times such as initiatives to improve staff retention, recalling senior judges or retired BIA members for temporary assignment to the BIA, and generally equipping the BIA with the resources necessary to adjudicate decisions in a timely manner.

Response: The Department appreciates the commenters' suggestions, though many of them—*e.g.,* hiring more immigration judges, recalling retired immigration judges or Board members—are beyond the scope of the IFR. The Department believes that the IFR will contribute to a better functioning immigration court system.

Further, the Department notes that the IFR was just one of many affirmative efforts to improve EOIR's efficiencies, including the immigration courts and the BIA, and it was not intended to foreclose alternative methods. For example, the Department has prioritized immigration judge hiring in recent years, increasing the number of immigration judges from 245 in 2010 to 466 through the first quarter of 2020. *See* EOIR, U.S. Dep't of Justice, *EOIR Adjudication Statistics: Immigration Judge (IJ) Hiring* (Jan. 2020), *https://www.justice.gov/eoir/page/file/1104846/download.* In 2018, the Department also increased the number of appellate immigration judges authorized to serve on the BIA from 17 to 21, *see* Expanding the Size of the Board of Immigration Appeals, 83 FR 8321 (Feb. 27, 2018), and recently increased it again to 23, *see* Expanding the Size of the Board of Immigration Appeals, 85 FR 18105 (Apr. 1, 2020). In addition, EOIR is working towards a pilot electronic system for filing and case management. *See* EOIR Electronic Filing Pilot Program, 83 FR

29575 (June 25, 2018). EOIR has taken steps to ensure that courtrooms are not being underutilized around the country during business hours. EOIR, U.S. Dep't of Justice, *Policy Memorandum 19–11: No Dark Courtrooms* (Mar. 29, 2019), *https://www.justice.gov/eoir/file/1149286/download* (intended to memorialize policies to reduce and minimize the impact of unused courtrooms and docket time). As previously explained by the Director, ''[e]ach of these accomplishments is critical to EOIR's continued success as it addresses the pending caseload, and EOIR has solved some of its most intractable problems of the past decade regarding hiring, productivity, and technology.'' *Unprecedented Migration at the U.S. Southern Border: The Year in Review: Hearing Before the S. Comm. on Homeland Sec. & Governmental Affs.,* 116th Cong. (2019) (statement of James McHenry, Director, EOIR, U.S. Dep't of Justice).

Comment: One commenter recommended that immigration courts be made into Article I courts.[17] The commenter did not provide further reasoning for the recommendation.

Response: The recommendation is both beyond the scope of this rulemaking and the authority of the Department of Justice.

Congress has the sole authority to create an Article I court. *Cf., e.g.,* 26 U.S.C. 7441 (''There is hereby established, under Article I of the Constitution of the United States, a court of record to be known as the United States Tax Court.''). Despite this authority, Congress has provided for a system of administrative hearings for immigration cases, which the Department believes should be maintained. *See* INA 240 (8 U.S.C. 1229a) (laying out administrative procedures for removal proceedings); *see also Strengthening and Reforming America's Immigration Court System: Hearing Before the Subcomm. on Border Sec. & Immigration of the S. Comm. on the Judiciary,* 115th Cong. (2018) (written response to Questions for the Record of James McHenry, Director, EOIR, U.S. Dep't of Justice) (''The financial costs and logistical hurdles to implementing an Article I immigration court system would be monumental and would likely delay pending cases even further.'').

D. Comments Regarding Regulatory Requirements: Administrative Procedure Act

1. Notice-and-Comment Requirements

Comment: Many commenters raised concerns that the IFR violated the Administrative Procedure Act (''APA'') by failing to provide a prior notice-and-comment period. *See* 5 U.S.C. 553. Several commenters stated that the rule should not have been exempt from the traditional notice-and-comment requirement and the rule included considerable substantive changes that will have a fundamental impact on EOIR's legal access programs. In making this argument, several commenters argued that the placement of OLAP's functions under OP constituted or took a step toward the elimination of those program functions.[18] One commenter indicated that the IFR's placement of OLAP under OP was particularly significant because OP ''is responsible for attacks on due process for immigrants'' and, with such a design, the rule constituted much more than an agency reorganization, rather than a mere ''rule of management and personnel'' or agency procedure and practice. Commenters alleged that because OLAP's programs impact thousands of accredited representatives and hundreds of non-profits who employ them, the IFR constituted an adverse impact on the public that required a period of notice-and-comment.

Some commenters argued that, because OLAP was created in direct response to a 2016 rule to administer the R&A Program, the changes to OLAP in the IFR should have been subject to the APA's notice-and-comment requirements.[19] Some commenters argued that the IFR improperly overturned the 2016 rule, which was properly implemented through notice and comment.

Commenters stated that there was not an ''urgent'' need to publish the IFR quickly and that the IFR enacted major changes to EOIR's adjudicatory system, thereby requiring EOIR to follow the notice-and-comment process.

Many of these commenters argued that the IFR's provisions regarding the delegation of authority from the Attorney General to the Director and from the Director to the Assistant Director for Policy demonstrated that the IFR made substantive changes that went beyond just reorganization and, thereby, required a period of notice and comment. Several commenters stated that the role of the Director is purely administrative, limited by the provisions of 8 CFR 1003.0, and that the IFR's provisions for the Director's intervention on BIA rulings when adjudication exceeds certain timelines amounted to significant substantive, not merely procedural, changes mandating a notice-and-comment period.

One commenter stated that implementation of the IFR without the provision of a notice-and-comment period undermined the APA's values, such as accuracy, efficiency, and acceptability.

One commenter said that the Department's characterization of the IFR's substance, which the commenter alleged was described as ''minor administrative housekeeping,'' was disingenuous and a deliberate effort to evade the APA's notice-and-comment requirements. Relatedly, another commenter asserted that the Department's imposition of the rule, without permitting a period for notice and comment, was ''both illegal and ill-conceived.''

Response: The Department disagrees with commenters that the IFR involved changes that required a notice-and-comment period or a 30-day delay in the effective date. As the Department explained in the IFR, it was not subject to the notice-and-comment process or a delay in effective date because it was ''a rule of management or personnel as well as a rule of agency organization, procedure, or practice.'' 84 FR at 44540; *see* 5 U.S.C. 553(a)(2), (b)(A).

Contrary to commenters' assertions that the substantive nature of the IFR triggered a required notice-and-comment period (as opposed to the procedural nature), the APA does not condition notice-and-comment requirements purely on whether a rulemaking is substantive in nature. Instead, the APA's notice-and-comment procedures are subject to various enumerated exceptions. Such exceptions include rulemaking related to ''agency management or personnel'' and ''rules of agency organization, procedure, or practice.'' *See* 5 U.S.C. 553(a)(2), (b)(A).

[17] In fact, the commenter recommended that immigration courts be made into Article II courts, but the Department believes that the commenter inadvertently meant to refer to Article I courts due to recent discussions on the issue, and responds accordingly. *See Strengthening and Reforming America's Immigration Court System, Hearing Before the H. Subcomm. on Border and Immigration Issues of the H. Comm. on the Judiciary,* 115th Cong. (Apr. 18, 2018), *https://www.judiciary.senate.gov/meetings/strengthening-and-reforming-americas-immigration-court-system* (exploring ways in which Congress can strengthen and reform the immigration court system, including the option to reform the system into Article I courts).

[18] See Part II.C.2.a of this preamble for further discussion.

[19] The Department understands these commenters to refer to OLAP's role in the R&A process, not OLAP as an individual office within EOIR. The 2016 regulation did not first establish OLAP. Instead, the 2016 regulation ''formalize[d] OLAP's structure and function as a component of EOIR and transfer[red] the administration of the R&A program from the Board to OLAP.'' 80 FR at 59516.

First, transferring OLAP and its programs to OP is a matter of agency management or personnel, as well as a rule of agency organization, procedure, or practice, such that notice-and-comment is unnecessary. *See* 5 U.S.C. 553(a)(2), (b)(A). In fact, OLAP has been moved multiple times within EOIR throughout its history, *see* 84 FR at 44537, and none of those moves were effected through notice-and-comment rulemaking. The IFR did not eliminate OLAP or otherwise change its programs except the immediate supervisor who oversees the office. *See supra* Part II.C.2.a. Further, the IFR did not change OLAP's significant role and operations within the agency or the necessary oversight of its projects and programs; it only transferred OLAP to a new component, OP, from OOD.

In addition, the Department disagrees that OP's actions undermine due process or that its creation was a product of anything further than agency management, personnel, and organization. *See supra* Part II.C.3.c, d. Accordingly, the public was not and will not be adversely affected by the IFR's internal reorganization and transfer of OLAP into OP and need not be given notice and an opportunity to comment. *See* 5 U.S.C. 553(a)(2), (b)(A).

The Department disagrees with commenters' assertions that the provisions in the IFR that delegated authority to the Director to review otherwise untimely BIA decisions were substantive changes that should have undergone notice-and-comment procedures. Instead, the Attorney General's delegation of authority to the Director to review cases under 8 CFR 1003.1(e)(8)(ii) furthers the Director's ability to exercise oversight and effective management of EOIR, and it improves agency organization, procedure, and practice in order to uphold EOIR's mission to interpret and administer the Nation's immigration laws. As explained by the IFR, an internal delegation of administrative authority does not adversely affect members of the public and involves an agency management decision that is exempt from the notice-and-comment rulemaking procedures of the APA. 84 FR at 44540. As such, the IFR is exempt from the APA's notice-and-comment requirements, and the Department appropriately published it as an IFR.

The general regulations that outline the Director's authority are contained in 8 CFR 1003.0(b) and were not substantively affected by the IFR.[20] Specifically, the regulations provide that the ''Director shall manage EOIR and its employees.'' 8 CFR 1003.0(b)(1). The enumerated list that follows in paragraphs (b)(1)(i)–(ix) explains how the Director may accomplish the directive provided in paragraph (b)(1). For example, the Director may ''[i]ssue operational instructions and policy, including procedural instructions,'' ''[d]irect the conduct of all EOIR employees to ensure the efficient disposition of all pending cases,'' and ''manage the docket of matters to be decided by the Board, the immigration judges, the Chief Administrative Hearing Officer, or the administrative law judges.'' *Id.* 1003.1(b)(1)(i), (ii). Given the breadth of the Director's responsibilities, the Attorney General also authorized the Director to ''exercise other such authorities as the Attorney General may provide.'' *Id.* 1003.0(b)(1)(ix).

Before the IFR's publication, § 1003.0(c) in turn provided that the Director had no authority to adjudicate cases arising under the Act or regulations and could not direct the result of an adjudication assigned to the Board, an immigration judge, the Chief Administrative Hearing Officer, or an Administrative Law Judge, although this prohibition was not to be construed to limit the authority of the Director under 8 CFR 1003.0(b). 8 CFR 1003.0(c) (2018). Accordingly, the authority conferred by paragraph (b)(1)(ix) on the Director to exercise other authority provided by the Attorney General was not affected by paragraph (c)'s limitation on the Director's adjudicatory authority.[21]

At the same time, the INA confers power on the Attorney General to review administrative determinations. INA 103(g)(2) (8 U.S.C. 1103(g)(2)). Prior to the IFR, when a case appeal surpassed the regulatory timeline, the Chairman assigned the case to himself, a Vice Chairman, or the Attorney General. 8 CFR 1003.1(e)(8)(ii) (2018). This procedure continues to be in place following the IFR. However, as a matter of agency management, as well as organization, procedure, or practice, the Attorney General delegated that authority to review administrative determinations to the Director. In his discretion, the Attorney General determined that the Director's oversight and management responsibilities, particularly in regards to case processing at the BIA, were best effectuated by authorizing the Director to adjudicate appeals when a ''panel is unable to issue a decision within the established time limits, as extended.'' *Id.* 1003.1(e)(8)(ii). Authorizing the Director to decide otherwise untimely cases allows him to best fulfill his oversight and management responsibilities of the agency, which includes the BIA. *See id.* 1003.0(b).

Regarding commenters who alleged there was not an ''urgent'' need to publish the IFR without notice-and-comment, the Department notes that it did not issue the rule as an IFR based on urgency; rather, the Department issued the rule as an IFR because it involved agency management or personnel, as well as agency organization, procedure, or practice. *See* 84 FR at 44540. As explained above, such rulemakings do not require a notice-and-comment period. 5 U.S.C. 553(a)(2), (b)(A).

Finally, the Department disagrees that publication of the rule as an IFR undermined values of the APA process. Congress specifically provided exceptions to the general notice-and-comment procedures for matters involving agency personnel or management because such procedures are unnecessary to further the APA's purpose. *See* S. Rep. No. 79–752, at 13 (1945) (explaining that the exception for proprietary matters was ''included because the principal considerations in most such cases relate to mechanics and interpretations or policy, and it is deemed wise to encourage and facilitate the issuance of rules by dispensing with all mandatory procedural requirements'').

The Department's publication of the rule as an IFR aligns with the Senate Committee's explanation of the exception at issue—while the Department was not required to use notice-and-comment rulemaking procedures, it chose, in an exercise of discretion, to issue the rule as an IFR to provide the public with information. For example, the IFR provided the public with information about OLAP's transfer because OLAP maintains many public-facing programs and contracts. Because the organizational change could impact letterhead or signage, with which the public interacts, the agency sought to reduce possible confusion.

Finally, the Department notes that although the IFR was published as an IFR and not a proposed rule, the IFR contained a 60-day comment period that was not required. The Department has

[20] The only change the IFR made to 8 CFR 1003.1(b)(1)(i)–(ix) was to include the Department of Health and Human Services (''HHS''), which has responsibility to provide care and other services for unaccompanied alien children (''UAC''), in the list of federal agencies with which EOIR may administratively coordinate. 84 FR at 44540 n.4; *see* 8 CFR 1003.0(b)(1)(iii); *cf.* 45 CFR pt. 410 (HHS regulations governing care and placement of UAC).

[21] See Part II.C.4.a of this preamble for further discussion regarding the propriety of the Attorney General's delegation of power to the Director to adjudicate cases.

carefully reviewed all comments received and appreciates the public's responses.

2. Arbitrary and Capricious

Comment: Several commenters stated that the rule's publication constituted an arbitrary and capricious attempt by the Department to impose substantive policy changes impacting the immigration adjudicatory process.

Other commenters stated that the rule's provision allowing for the Director's involvement when BIA adjudication exceeds the permissible timeline constitutes an impermissible, arbitrary reassignment of the BIA's authority to an administrator, not a judge. One commenter argued that the rule's timeline permitting intervention by the Director in BIA decisions amounted to creation of an ''arbitrary deadline,'' which would force judges to place speed over justice and violate due process requirements.

Several commenters argued that the IFR is arbitrary and capricious because the transfer of R&A Program oversight from OLAP to OP amounted to ''dismantling programs'' that are required by regulation, statute, and court order. Some commenters observed that the IFR's notice did not include sufficient information to anticipate the practical effects of changes created by the IFR, including possible changes to immigrants' access to counsel.

Response: The Department disagrees with commenters that the IFR's changes to title 8 and title 28, CFR, are arbitrary and capricious. *See* 5 U.S.C. 706(2)(A). An agency's decision is arbitrary and capricious if the agency did not conduct a consideration of the relevant factors and made a clear error of judgment. *Citizens to Preserve Overton Park, Inc.* v. *Volpe,* 401 U.S. 402, 416 (1971). As evidenced in the IFR, the Department considered the relevant factors and concluded that the changes to EOIR's organization and adjudication process were necessary to increase efficiency and properly allocate resources. *See, e.g.,* 84 FR at 44538–40. As explained in Part II.D.1 of this preamble, the IFR set forth non-substantive changes regarding agency management or personnel, as well as agency organization, procedure, or practice, and it was not subject to notice-and-comment requirements. *See Id.* at 44540; *see also* 5 U.S.C. 553(a)(2), (b)(A).

Specifically, the Department does not believe that it was arbitrary and capricious for the Attorney General to delegate his authority to the Director to adjudicate appeals that have exceeded the BIA's adjudication times. This delegation of authority is one of many actions that the Department is taking to address the pending caseload of appeals at the Board. The Attorney General has already codified regulations recognizing that the Attorney General may delegate duties to the Director in addition to those outlined in existing regulations. *See* 8 CFR 1003.0(b)(1)(ix) (providing that the Director may exercise ''other authorities as the Attorney General may provide''). Here, the Attorney General has reasonably concluded that it is necessary and appropriate to assign certain pending case appeals to the Director for adjudication for the purpose of improving efficiency in adjudications. *See* 84 FR at 44539–40.

The Department disagrees that this delegation of authority sets arbitrary deadlines. In fact, the IFR did not affect any BIA case-processing timelines. Instead, the timelines provided in EOIR's regulations for BIA case appeal adjudications were first established in 2002. *See* Board of Immigration Appeals: Procedural Reforms To Improve Case Management, 67 FR 54878, 54896 (Aug. 26, 2002) (codified at 8 CFR 3.1(e)(8) (2002)).[22] As part of this rulemaking, the Department revised 8 CFR 1003.1(e)(8)(ii), which generally required the Chairman to re-assign pending BIA cases that have surpassed the imposed deadlines to himself, a Vice-Chairman, or the Attorney General. *See* 8 CFR 1003.1(e)(8)(ii) (2018). The Department is unaware of any existing case law finding the deadlines imposed were arbitrary and capricious. *Cf., e.g., Purveegiin* v. *Gonzales,* 448 F.3d 684, 691 (3d Cir. 2006) (citing 8 CFR 1003.1(e)(8) as an example of a regulation that was ''merely an 'internal management directive' '').

Finally, the Department disagrees that the IFR was arbitrary and capricious because it ''dismantled'' the R&A Program. The IFR was ''not intended to change—and [did] not have the effect of changing—any of OLAP's current functions.'' 84 FR at 44539. Moreover, the rule plainly required OP to ''maintain a division within the Office of Policy to develop and administer a program to recognize organizations and accredit representatives to provide representation before [EOIR and/or DHS].'' 8 CFR 1003.0(e)(3). As explained above, the IFR merely moved oversight of the R&A Program from one non-adjudicatory component of EOIR, OOD, to another, OP. The R&A Program and OLAP's other programs continue to operate under OLAP's new leadership structure, demonstrating the Department's consideration of the practical effects of the rule, including aliens' access to counsel, as it relates to this point. Further, because the rule merely restructures EOIR, the practical effects to individual aliens is minimal at best.

[22] Following the creation of DHS in 2003 after the passage of the HSA, EOIR's regulations were moved from chapter I of title 8, CFR, to chapter V. Aliens and Nationality; Homeland Security; Reorganization of Regulations, 68 FR 9824 (Feb. 28, 2003). Part 3 was duplicated for EOIR at part 1003.

III. Provisions of the Final Rule

The Department has considered and responded to the comments received in response to the IFR. In accordance with the authorities discussed in Part I.B of this preamble, the Department is now issuing a final rule that adopts the provisions of the IFR as final with some amendments to 8 CFR 1003.0(b)(2) and (c), regarding the Director's adjudicatory authority and ability to delegate that authority, 8 CFR 1292.6, regarding the Director's interpretive authority in R&A cases, and 8 CFR 1292.18(a), also regarding the Director's ability to delegate his authority. Taken together, these changes address commenters' concerns that the IFR's changes allowed the Director to delegate authority to adjudicate cases arising under the Act or the regulations to the Assistant Director of Policy or to any other EOIR employee, and that the Director's decisions when adjudicating untimely BIA appeals could be subject to improper influence. The Department did not intend for the IFR to have either of those effects; therefore, it amends the regulatory text in the following ways.

First, in 8 CFR 1003.0(b)(2), the final rule designates the current text in the paragraph, which sets out the Director's general delegation authority, as paragraph 8 CFR 1003.0(b)(2)(i). It then adds new paragraph 8 CFR 1003.0(b)(2)(ii), which provides an exception to the Director's delegation authority. These changes instruct that the Director may generally delegate authority given to him by 8 CFR part 1003 or directly by the Attorney General to ''the Deputy Director, the Chairman of the Board of Immigration Appeals, the Chief Immigration Judge, the Chief Administrative Hearing Officer, the Assistant Director for Policy, the General Counsel, or any other EOIR employee,'' but that the Director may not further delegate the case adjudication authority provided by 8 CFR 1003.1(e)(8)(ii) (regarding the adjudication of BIA cases that exceed the established adjudication timelines), 8 CFR 1292.18 (regarding the Director's discretionary authority to review requests for reconsideration of denials of applications for recognition or accreditation), or any other provision or

direction unless expressly authorized to do so.

The final rule adds language to 8 CFR 1003.0(c) providing guidelines that would apply whenever the Director is authorized by statute, regulation, or delegation of authority from the Attorney General or when acting as the Attorney General's designee. During such adjudications, the final rule specifically instructs the Director to ''exercise independent judgment and discretion.'' As discussed above, the Director is a member of the career SES, not a political appointee, who has a demonstrated a knowledge of immigration law and procedure. The final rule enhances the assurance of independent judgment, and not political motivation, regarding the decisions the agency's adjudicators make, such as those authorized by regulation at 8 CFR 1003.1(e)(8)(ii) and 1292.18.

In addition, the final rule authorizes the Director to ''take any action consistent with the Director's authority as is appropriate and necessary for the disposition of the case.'' For example, under 8 CFR 1003.0(b)(1)(ii), the Director has authority to ''[d]irect the conduct of all EOIR employees to ensure the efficient disposition of all pending cases.'' The final rule makes explicit that this and other powers of the Director also apply whenever the Director is authorized to adjudicate a case.

The final rule also clarifies 8 CFR 1292.6 to state that both the Assistant Director for Policy (or the Assistant Director for Policy's delegate) and the Director are responsible for interpreting 8 CFR 1292.11 through 1292.20 when adjudicating R&A cases. This clarification eliminates any suggestion that only the Assistant Director for Policy (or the Assistant Director for Policy's delegate) can interpret 8 CFR 1292.11 through 1292.20, which would be in tension with the Director's administrative review authority in 8 CFR 1292.18.

Finally, consistent with the limitation, in response to a commenter's concern, on the Director's ability to re-delegate the Director's adjudicatory authority, the final rule makes a conforming change to 8 CFR 1292.18 by removing the Director's authority to delegate the discretionary authority to review requests for reconsideration of denials of applications for recognition or accreditation to ''any officer within EOIR, except the Assistant Director for Policy (or the Assistant Director for Policy's delegate).'' This provision was initially included in the regulations in 2016 without discussion as to the need of the Director to be able to delegate these cases. *See* 81 FR at 92356–57, 92372. The final rule, thus, ensures that the limit on the Director's authority to re-delegate that position's adjudicatory authorities is consistent across the regulations.

IV. Regulatory Review Requirements

A. Administrative Procedure Act

As previously explained by the Department and discussed further in Part II.D.1 of this preamble, the IFR was a rule of agency management or personnel, as well as a rule of agency organization, procedure, or practice, and was exempt from the requirements for notice-and-comment rulemaking and a 30-day delay in effective date. *See* 5 U.S.C. 553(a)(2), (b)(A); *see also* 84 FR at 44540. This rule adopts the provisions of the IFR with changes to provide restrictions on the authority of the Director regarding further delegations of certain regulatory authorities, to clarify that the Director shall exercise independent judgment when considering cases subject to his adjudication and may take any action within his authority that is appropriate and necessary to decide those cases, and to clarify the authority to interpret certain regulations. These changes are additional matters of agency management or personnel. Accordingly, this final rule, too, is exempt from the requirements of a 30-day delay in effective date.

B. Regulatory Flexibility Act

Under the Regulatory Flexibility Act (''RFA''), ''[w]henever an agency is required by section 553 of [title 5, U.S. Code], or any other law, to publish general notice of proposed rulemaking for any proposed rule, . . . the agency shall prepare and make available for public comment an initial regulatory flexibility analysis.'' 5 U.S.C. 603(a); *see also id.* 604(a). Such analysis is not required when a rule is exempt from notice-and-comment rulemaking under 5 U.S.C. 553. Because this rule is exempt from notice-and-comment rulemaking under 5 U.S.C. 553, no RFA analysis under 5 U.S.C. 603 or 604 is required.

C. Unfunded Mandates Reform Act of 1995

This final rule will not result in the expenditure by State, local, and tribal governments, in the aggregate, or by the private sector, of $100 million or more in any one year, and it will not significantly or uniquely affect small governments. Therefore, no actions were deemed necessary under the provisions of the Unfunded Mandates Reform Act of 1995, 2 U.S.C. 1501 *et seq.*

D. Executive Order 12866, Executive Order 13563, and Executive Order 13771 (Regulatory Planning and Review)

This rule is limited to agency organization, management, or personnel matters and is therefore not subject to review by the Office of Management and Budget pursuant to section 3(d)(3) of Executive Order 12866. Further, because this rule is one of internal organization, management, or personnel, it is not subject to the requirements of Executive Orders 13563 or 13771.

E. Executive Order 13132 (Federalism)

This final rule will not have substantial direct effects on the States, on the relationship between the national government and the States, or on the distribution of power and responsibilities among the various levels of government. Therefore, in accordance with section 6 of Executive Order 13132, it is determined that this rule does not have sufficient federalism implications to warrant the preparation of a federalism summary impact statement.

F. Executive Order 12988 (Civil Justice Reform)

This final rule meets the applicable standards set forth in sections 3(a) and 3(b)(2) of Executive Order 12988.

G. Paperwork Reduction Act

The provisions of the Paperwork Reduction Act of 1995, 44 U.S.C. 3501 *et seq.,* and its implementing regulations in 5 CFR part 1320, do not apply to this rule because there are no new or revised recordkeeping or reporting requirements.

H. Congressional Review Act

This is not a major rule as defined by 5 U.S.C. 804(2). This action pertains to agency management or personnel and is a rule of agency organization, procedure, or practice that does not substantially affect the rights or obligations of non-agency parties. Accordingly, it is not a ''rule'' as that term is used in 5 U.S.C. 804(3). Therefore, the reports to Congress and the Government Accountability Office specified by 5 U.S.C. 801 are not required.

List of Subjects

8 CFR Part 1001

Administrative practice and procedure, Immigration.

8 CFR Part 1003

Administrative practice and procedure, Aliens, Immigration, Legal services, Organization and functions (Government agencies).

8 CFR Part 1292

Administrative practice and procedure, Immigration, Lawyers, Reporting and recordkeeping requirements.

28 CFR Part 0

Authority delegations (Government agencies), Government employees, Organization and functions (Government agencies), Privacy, Reporting and recordkeeping requirements, Whistleblowing.

Accordingly, for the reasons set forth in the preamble, the interim final rule amending parts 1001, 1003, and 1292 of title 8 of the Code of Federal Regulations and part 0 of title 28 of the Code of Federal Regulations, published August 26, 2019, at 84 FR 44537, is adopted as final with the following changes:

Title 8—Aliens and Nationality

PART 1003—EXECUTIVE OFFICE FOR IMMIGRATION REVIEW

■ 1. The authority citation for part 1003 continues to read as follows:

Authority: 5 U.S.C. 301; 6 U.S.C. 521; 8 U.S.C. 1101, 1103, 1154, 1155, 1158, 1182, 1226, 1229, 1229a, 1229b, 1229c, 1231, 1254a, 1255, 1324d, 1330, 1361, 1362; 28 U.S.C. 509, 510, 1746; sec. 2 Reorg. Plan No. 2 of 1950; 3 CFR, 1949–1953 Comp., p. 1002; section 203 of Pub. L. 105–100, 111 Stat. 2196–200; sections 1506 and 1510 of Pub. L. 106–386, 114 Stat. 1527–29, 1531–32; section 1505 of Pub. L. 106–554, 114 Stat. 2763A–326 to –328.

■ 2. Section 1003.0 is amended by revising paragraphs (b)(2) and (c) to read as follows:

§ 1003.0 Executive Office for Immigration Review.

* * * * *

(b) * * *

(1) * * *

(2) *Delegations.* (i) Except as provided in paragraph (b)(2)(ii) of this section, the Director may delegate the authority given to him by this part or otherwise by the Attorney General to the Deputy Director, the Chairman of the Board of Immigration Appeals, the Chief Immigration Judge, the Chief Administrative Hearing Officer, the Assistant Director for Policy, the General Counsel, or any other EOIR employee.

(ii) The Director may not delegate the authority assigned to the Director in §§ 1003.1(e)(8)(ii) and 1292.18 and may not delegate any other authority to adjudicate cases arising under the Act or regulations unless expressly authorized to do so.

(c) *Limit on the authority of the Director.* Except as provided by statute, regulation, or delegation of authority from the Attorney General, or when acting as a designee of the Attorney General, the Director shall have no authority to adjudicate cases arising under the Act or regulations or to direct the result of an adjudication assigned to the Board, an immigration judge, the Chief Administrative Hearing Officer, or an Administrative Law Judge. When acting under authority described in this paragraph (c), the Director shall exercise independent judgment and discretion in considering and determining the cases and may take any action consistent with the Director's authority as is appropriate and necessary for the disposition of the case. Nothing in this part, however, shall be construed to limit the authority of the Director under paragraph (a) or (b) of this section.

* * * * *

PART 1292—REPRESENTATION AND APPEARANCES

■ 3. The authority citation for part 1292 continues to read as follows:

Authority: 8 U.S.C. 1103, 1362.

■ 4. Section 1292.6 is amended by revising the last sentence to read as follows:

§ 1292.6 Interpretation.

* * * Interpretations of §§ 1292.11 through 1292.20 will be made by the Assistant Director for Policy (or the Assistant Director for Policy's delegate) or the Director.

§ 1292.18 [Amended]

■ 5. Section 1292.18 is amended in paragraph (a) introductory text by removing the last sentence.

Dated: October 13, 2020.

William P. Barr,

Attorney General.

[FR Doc. 2020–23210 Filed 11–2–20; 8:45 am]

BILLING CODE 4410–30–P

BUREAU OF CONSUMER FINANCIAL PROTECTION

12 CFR Chapter X

Statement of Policy on Applications for Early Termination of Consent Orders

AGENCY: Bureau of Consumer Financial Protection.

ACTION: Policy statement.

SUMMARY: The Dodd-Frank Wall Street Reform and Consumer Protection Act (Dodd-Frank Act) provides that the Bureau of Consumer Financial Protection (Bureau) may enter into administrative consent orders (Consent Orders) where the Bureau has identified violations of Federal consumer financial law. The Bureau recognizes that there may be exceptional circumstances where it is appropriate to terminate a Consent Order before its original expiration date. To facilitate such early terminations where appropriate, this policy statement sets forth a process by which an entity subject to a Consent Order may apply for early termination and articulates the standards that the Bureau intends to use when evaluating early termination applications.

DATES: This policy statement is applicable on October 8, 2020.

FOR FURTHER INFORMATION CONTACT: Mehul Madia, Division of Supervision, Enforcement, and Fair Lending, at (202) 435–7104. If you require this document in an alternative electronic format, please contact *CFPB_Accessibility@cfpb.gov.*

SUPPLEMENTARY INFORMATION:

I. Background

Where the Bureau has found that an entity has violated Federal consumer financial law, the Dodd-Frank Act provides that the Bureau may settle its claims against that entity by entering into an administrative Consent Order.[1] Consent Orders describe the Bureau's findings and conclusions concerning the identified violations and generally impose injunctive relief, monetary relief such as redress and civil money penalties, and reporting, recordkeeping, and cooperation requirements.[2] Consent Orders are negotiated by the Bureau and the entity (or entities) subject to them and generally have a five-year term, although in some instances the Bureau may impose a longer term when, in its view, the circumstances warrant it. Bureau staff monitor whether entities subject to Consent Orders are complying

[1] *See* 12 U.S.C. 5563; *see also* 12 CFR 1081.120(d). The Bureau may also enter into settlements that are filed in Federal court and must be approved by the court. *See* 12 U.S.C. 5564(c). The Bureau may enter into settlements with any ''person,'' which includes both individuals (*i.e.,* natural persons) and various kinds of entities. *See* 12 U.S.C. 5481(19). As discussed further below, this policy applies to entities subject to Consent Orders, and not to individuals. This policy therefore generally refers to ''entities'' when discussing Bureau Consent Orders.

[2] *See* 12 U.S.C. 5565; *see also* Consumer Financial Protection Bureau, Enforcement Actions, *https://www.consumerfinance.gov/policy-compliance/enforcement/actions/.*

with the terms of those orders, and when appropriate the Bureau takes action against those who fail to comply with a Consent Order.[3]

Consent Orders play an essential role in the Bureau's enforcement work by providing a public, enforceable mechanism to provide relief for consumers and to deter future violations, and the Bureau believes that in most instances Consent Orders should run for their full negotiated terms. At the same time, the Bureau recognizes that Consent Orders can impose burdens on the entities subject to them. For example, the reporting and record-keeping requirements imposed by Consent Orders can be costly and resource-intensive. In addition, in some circumstances, the existence of an open Bureau Consent Order can impact whether a depository institution supervised by a prudential regulator is permitted to open new branches or to merge with or acquire other financial institutions—which can burden the institution and potentially limit the choices available to consumers. Monitoring Consent Orders can also pose a burden for the Bureau itself.

The Bureau believes there may be exceptional circumstances when early termination of a Consent Order against an entity is appropriate and can be accomplished in a manner that minimizes the risk of new violations of law or harm to consumers. To facilitate such early terminations, this policy statement sets forth a process by which an entity subject to a Consent Order may apply for early termination and articulates the standards that the Bureau intends to use when evaluating early termination applications. Under this policy, which is not binding on the Bureau, the Bureau's Director intends to retain complete discretion and sole authority to terminate Consent Orders.

In addition to reducing the burdens associated with Consent Orders when they are no longer necessary, this policy provides entities with an incentive to fully and promptly comply with Bureau Consent Orders and to improve their compliance management systems to avoid additional violations. This policy also provides guidance to those subject to Bureau Consent Orders regarding the circumstances in which the Bureau may grant applications for early termination of a Consent Order.

II. Policy on Applications for Early Termination of Consent Orders

A. Conditions for Granting Early Termination

The Bureau intends to grant applications for early termination of Consent Orders if it determines, in its sole discretion, that:

- The entity meets all of the eligibility criteria set forth below;
- The entity has complied with the terms and conditions of the Consent Order; and
- The entity's compliance position is ''satisfactory'' in the institutional product line (IPL) or compliance area (*e.g.,* fair lending) for which the Order was issued.

When an entity applies for termination, its application should demonstrate that these conditions are satisfied.

1. Eligibility To Apply for Early Termination

In order to protect consumers from unwarranted early terminations and preserve the resources of potential applicants and the Bureau, the Bureau only intends to consider applications for early termination under this policy from entities that meet certain threshold eligibility criteria.

First, the entity must be subject to a Consent Order the Bureau issued using its authority to conduct administrative adjudication proceedings.[4] This policy does not apply to settlements approved and ordered by a court, which can only be terminated early by court order. In general, the Bureau does not believe it is an appropriate use of its resources to seek to alter the status of settlements entered by courts. This policy also does not apply to court orders entered as a result of litigation (*e.g.,* after trial or summary judgment), which similarly can only be lifted by a court.

Second, only entities are eligible to apply for early termination under this policy.[5] Individuals (*i.e.,* natural persons) are not eligible. As described further below, the Bureau only intends to grant early termination where, among other things, an entity demonstrates that its compliance management system is ''satisfactory'' in the institutional product line in which the Consent Order was issued. The Bureau believes it would be impractical to undertake a comparable review of whether individuals are likely to comply with the law in the future.

Third, entities may not apply for early termination under this policy within the first year after the entry of the Consent Order, or until at least six months after all compliance and redress plans required under the Consent Order have been fully implemented, whichever is later. This eligibility requirement is intended to discourage premature applications for termination of Consent Orders and to preserve Bureau resources.

Fourth, entities are not eligible for early termination under this policy when the Consent Order imposes a ban on participating in a certain industry (*e.g.,* the mortgage industry or debt-relief industry), when the Consent Order at issue involves violations of an earlier Bureau Order, or when there has been any criminal action related to the violations found in the Consent Order.[6] In each of these situations, the Bureau believes that the risk of future violations and harm to consumers is heightened and that considering applications for early termination of a Consent Order would not be a productive use of Bureau resources.

Finally, absent extraordinary circumstances, the Bureau does not intend to consider more than one request from an entity for termination of the same Consent Order. This eligibility requirement is intended to incentivize entities to submit complete applications at an appropriate time following the issuance of a Consent Order, and to discourage serial requests that could pose a resource challenge for the Bureau.

2. Compliance With the Consent Order

When an entity applies for early termination, its application should demonstrate its full compliance with the Consent Order, including whether the entity has, when required, corrected violations of Federal consumer financial law; paid redress, civil money penalties, or other monetary relief; adopted appropriate policies and procedures to ensure future compliance; submitted adequate reports; and maintained required records. The entity's application may reference or attach prior submissions to the Bureau relevant to demonstrating its compliance with

[3] The Bureau may seek to enforce compliance with Consent Orders administratively or in court. *See, e.g.,* 12 U.S.C. 5563(a), (b), (c), (d), 5564(a). In addition to being a violation of the Consent Order itself, a failure to comply with the terms of a Consent Order is a violation of the Dodd-Frank Act. *See* 12 U.S.C. 5536(a)(1)(A) (making it unlawful for a covered person or service provider to ''commit any act or omission in violation of a Federal consumer financial law''); 12 U.S.C. 5481(14) (defining ''Federal consumer financial law'' to include an ''order prescribed by the Bureau'').

[4] *See* 12 U.S.C. 5563; 12 CFR 1081.120(d).

[5] For purposes of this policy, an entity is any ''person'' under 12 U.S.C. 5481(19) other than an individual.

[6] For purposes of this policy, a related criminal action is any Federal, State, or local criminal action involving the conduct described in the Consent Order in which the entity or any of its affiliates, officers, employees, or agents have been named as a defendant or as an unindicted co-conspirator, regardless of whether there has been a conviction in the action.

the Consent Order as appropriate. Additionally, if applicable, the entity's application should reference the results of any supervisory work conducted by the Bureau to assess the entity's Consent Order compliance and provide any additional information relevant to assessing its compliance with the Consent Order.

Where appropriate, the Bureau will work with the entity to ensure that the entity has provided adequate documentation to demonstrate compliance. If it has not already done so, the Bureau intends to expeditiously review the entity's compliance with the Consent Order and conduct follow-up work as needed to determine the entity's compliance. The Bureau generally intends to complete this compliance review within six months of receiving an application that the Bureau determines is complete, although the Bureau retains discretion over when to conduct the review to determine compliance with Consent Order provisions given the Bureau's other supervisory and enforcement priorities.

3. Satisfactory Compliance System for the IPL or Compliance Area

In the application for early termination of the Consent Order, the entity shall also demonstrate that its compliance management system for the IPL or compliance area at issue under the Order is ''satisfactory,'' or the equivalent of a ''2'' rating under the Uniform Interagency Consumer Compliance Rating System. Under that rating system, a 2 rating signifies that the entity ''maintains a [compliance management system] that is satisfactory at managing consumer compliance risk in the institution's products and services and at substantially limiting violations of law and consumer harm.'' As part of its application to the Bureau for early termination, an entity should submit evidence that it has satisfied these elements. If applicable, the entity should reference prior supervisory conclusions from a Bureau examination regarding the entity's compliance management system for the IPL or compliance area at issue.[7] In addition, if applicable, the entity should identify any supervisory rating or conclusion regarding its compliance management system in the relevant IPL or compliance area that it has received from other State or Federal regulators during the pendency of the Consent Order. The entity should also provide the Bureau with any additional documentation or information that the Bureau considers necessary to determine whether the entity maintains a satisfactory compliance management system in the subject IPL.[8]

The Bureau believes that requiring an entity to satisfy this condition should help ensure that the entity's compliance position is sustainable after the Consent Order is terminated.

B. Process for Submission and Review of Early Termination Applications

Unless otherwise directed in writing by the Bureau, an entity's termination application should be submitted to the Bureau point of contact identified in the ''Notices'' section of the Consent Order. Prior to submitting an application for order termination, an entity should contact the Bureau point of contact established in the Consent Order for additional guidance on the form of such a request.[9] In general, the entity's application should demonstrate that the entity has satisfied all of the conditions set forth above. The application may include exhibits and may reference prior written submissions to the Bureau as appropriate. Any factual assertions an entity makes in its application should be made under oath (such as in a sworn affidavit) by someone with personal knowledge of such facts.

Bureau staff intend to review the application and any supporting documentation when considering whether to recommend that the Director grant an application to terminate a Consent Order. As noted above, the Bureau may request additional information from the entity when evaluating the application. The Bureau may also consider any other information available to it regarding the entity, including information obtained from other government agencies or through other supervisory and enforcement activities involving the entity.

Under this policy, Bureau staff intend to make recommendations to the Bureau's Director regarding whether to grant applications for early termination. The Bureau's Director intends to retain complete discretion and sole authority to terminate Consent Orders. The Director's orders granting or denying termination applications will be posted on the Bureau's online administrative docket[10] and distributed to the entity. Prior to the Director's decision, an entity may withdraw its application at any time.[11]

III. Regulatory Requirements

This Policy Statement constitutes a general statement of policy that is exempt from the notice and comment rulemaking requirements of the Administrative Procedure Act.[12] It is intended to provide information regarding the Bureau's general plans to exercise its discretion and does not impose any legal requirements on external parties, nor does it create or confer any substantive rights on external parties that could be enforceable in any administrative or civil proceeding. Because no notice of proposed rulemaking is required, the Regulatory Flexibility Act does not require an initial or final regulatory flexibility analysis. The Bureau has also determined that this Policy Statement does not impose any new or revise any existing recordkeeping, reporting, or disclosure requirements on covered entities or members of the public that would be collections of information requiring approval by the Office of Management and Budget under the Paperwork Reduction Act.

Pursuant to the Congressional Review Act, 5 U.S.C. 801 *et seq.,* the Bureau will submit a report containing this policy statement and other required information to the United States Senate, the United States House of Representatives, and the Comptroller General of the United States prior to its applicability date. The Office of Information and Regulatory Affairs has designated this Policy Statement as not a ''major rule'' as defined by 5 U.S.C. 804(2).

IV. Signing Authority

The Director of the Bureau, having reviewed and approved this document,

[7] If, during the pendency of the Consent Order, Bureau supervisory staff have already concluded through supervisory work that the entity's compliance management system for the IPL or compliance area at issue is satisfactory or better, the entity may reference that exam and that supervisory conclusion in this portion of its application and need not provide additional documentation regarding its compliance management system.

[8] When evaluating applications, the Bureau does not intend to assign a numerical compliance rating under the Consumer Compliance Rating System to the entity that has applied for early termination. The Bureau assigns such ratings in the normal course of its supervisory process, and it intends to continue to do so in the context of scheduled examinations of consent order compliance.

[9] Any other questions regarding submission of an application for early termination should also be directed to the designated point of contact for the Consent Order.

[10] *See https://www.consumerfinance.gov/administrative-adjudication-proceedings/administrative-adjudication-docket/.*

[11] Prior to the Director's decision, Bureau staff may inform the entity if staff intend to recommend denying an application for early termination. If an entity withdraws its application, the Bureau would still consider the application to constitute the entity's one application for early termination for purposes of the eligibility criteria set forth in section II.A.1.

[12] 5 U.S.C. 553(b). However, this is not a ''statement of policy'' as that term is specifically used in Regulation X, 12 CFR 1024.4(a)(1)(ii).

is delegating the authority to electronically sign this document to Laura Galban, a Bureau **Federal Register** Liaison, for purposes of publication in the **Federal Register**.

Dated: October 5, 2020.

Laura Galban,

Federal Register Liaison, Bureau of Consumer Financial Protection.

[FR Doc. 2020–22360 Filed 11–2–20; 8:45 am]

BILLING CODE 4810–AM–P

DEPARTMENT OF TRANSPORTATION

Federal Aviation Administration

14 CFR Part 39

[Docket No. FAA–2020–0921; Project Identifier AD–2020–00323–R; Amendment 39–21303; AD 2020–22–07]

RIN 2120–AA64

Airworthiness Directives; Bell Textron Inc. (Type Certificate Previously Held by Bell Helicopter Textron Inc.) Helicopters

AGENCY: Federal Aviation Administration (FAA), DOT.

ACTION: Final rule; request for comments.

SUMMARY: The FAA is adopting a new airworthiness directive (AD) for all Bell Textron Inc. (Type Certificate previously held by Bell Helicopter Textron Inc.) Model 412, 412CF, and 412EP helicopters. This AD requires revising the existing Rotorcraft Flight Manual (RFM) for your helicopter. This AD was prompted by an accident and multiple reports of a cracked main gearbox (MGB) support case. The FAA is issuing this AD to address the unsafe condition on these products.

DATES: This AD is effective November 18, 2020.

The Director of the Federal Register approved the incorporation by reference of certain publications listed in this AD as of November 18, 2020.

The FAA must receive comments on this AD by December 18, 2020.

ADDRESSES: You may send comments, using the procedures found in 14 CFR 11.43 and 11.45, by any of the following methods:

- *Federal eRulemaking Portal:* Go to *https://www.regulations.gov.* Follow the instructions for submitting comments.
- *Fax:* 202–493–2251.
- *Mail:* U.S. Department of Transportation, Docket Operations, M–30, West Building Ground Floor, Room W12–140, 1200 New Jersey Avenue SE, Washington, DC 20590.
- *Hand Delivery:* U.S. Department of Transportation, Docket Operations, M–30, West Building Ground Floor, Room W12–140, 1200 New Jersey Avenue SE, Washington, DC 20590, between 9 a.m. and 5 p.m., Monday through Friday, except Federal holidays.

For service information identified in this final rule, contact Bell Textron, Inc., P.O. Box 482, Fort Worth, TX 76101; telephone 817–280–3391; fax 817–280–6466; or at *https://www.bellcustomer.com.* You may view this service information at the FAA, Office of the Regional Counsel, Southwest Region, 10101 Hillwood Pkwy., Room 6N–321, Fort Worth, TX 76177. For information on the availability of this material at the FAA, call 817–222–5110. It is also available on the internet at *https://www.regulations.gov* by searching for and locating Docket No. FAA–2020–0921.

Examining the AD Docket

You may examine the AD docket on the internet at *https://www.regulations.gov* by searching for and locating Docket No. FAA–2020–0921; or in person at Docket Operations between 9 a.m. and 5 p.m., Monday through Friday, except Federal holidays. The AD docket contains this final rule, any service information that is incorporated by reference, any comments received, and other information. The street address for the Docket Operations is listed above. Comments will be available in the AD docket shortly after receipt.

FOR FURTHER INFORMATION CONTACT: Kuethe Harmon, Safety Management Program Manager, DSCO Branch, Compliance & Airworthiness Division, FAA, 10101 Hillwood Pkwy., Fort Worth, TX 76177; telephone 817–222-5198; email *kuethe.harmon@faa.gov.*

SUPPLEMENTARY INFORMATION:

Discussion

The FAA is adopting a new AD for Bell Textron Inc. Model 412, 412CF, and 412EP helicopters. This AD was prompted by an accident on a Model 412EP helicopter and multiple reports of a cracked MGB support case. Initial investigations showed that excessive pylon pitch vibrations likely caused overload that resulted in these failures, and investigations are ongoing to determine the root cause of these vibrations. However, field experience and flight test data indicate that excessive degradation of the transmission mounts and friction dampers could cause the sudden increase in one-per-rev vertical vibration, and minimum collective and cyclic controls friction not meeting the maintenance manual specifications may also be a contributing factor.

This condition, if not addressed, could result in structural failure of the MGB support case and subsequent reduced control of the helicopter. To address this unsafe condition, this AD requires revising Section 2, Normal Procedures, under both ''BEFORE TAKEOFF'' and ''IN–FLIGHT OPERATION(S)'' of the existing RFM for your helicopter.

Related Service Information Under 1 CFR Part 51

The FAA reviewed Section 2—Normal Procedures, of Bell 412 BHT–412–FM–1 RFM, Revision 26; Bell 412 BHT–412–FM–2 RFM, Revision 13; Bell 412 BHT–412–FM–3 RFM, Revision 20; Bell 412EP BHT–412–FM–4 RFM, Revision 37; Bell 412EPI BHT–412–FM–5 RFM, Revision 9; and Subaru Bell 412EPX BHT–412–FM–6 RFM, Revision 5, each dated August 19, 2020. These RFM revisions add a caution under ''BEFORE TAKEOFF'' and ''IN–FLIGHT OPERATION(S)'' to the existing RFM for your helicopter.

This service information is reasonably available because the interested parties have access to it through their normal course of business or by the means identified in the **ADDRESSES** section.

Other Related Service Information

The FAA also reviewed Bell Operation Safety Notice 412–18–43, dated December 19, 2018 (OSN), which notified Model 412 and 412EP helicopter owners and operators of reports regarding rapid buildup of one-per-rev vertical vibration associated with a large steady state forward cyclic displacement in combination with collective input while at 100/103 percent revolutions per minute (RPM) with any part of the skid gear in contact with the ground. The OSN also noted that this vibration mode can be encountered on all Bell Model 412 helicopters equipped with any type of landing gear. Finally, the OSN reminded operators that, should this vibration mode be experienced, the amount of forward cyclic input shall immediately be reduced and, if necessary, the collective and rotor RPM shall also be reduced to exit the vibration mode described.

FAA's Determination

The FAA is issuing this AD after evaluating all of the relevant information and determining the unsafe condition described previously is likely

to exist or develop in other helicopters of these same type designs.

AD Requirements

This AD requires, before further flight, revising Section 2, Normal Procedures, under both ''BEFORE TAKEOFF'' and ''IN–FLIGHT OPERATION(S)'' of the existing RFM for your helicopter to add a caution about what to do if a sudden increase in one-per-rev vertical vibrations occurs with large steady state forward cycle displacements in combination with collective input while at a certain RPM % is encountered while any part of the skids is touching the ground. The caution varies depending on your helicopter model and serial number.

Revising the existing RFM for your helicopter may be performed by the owner/operator (pilot) holding at least a private pilot certificate. This authorization is an exception to the FAA's standard maintenance regulations. The pilot must record compliance with this AD in the aircraft maintenance records in accordance with 14 CFR 43.9(a)(1) through (4) and 14 CFR 91.417(a)(2)(v). The record must be maintained as required by 14 CFR 91.417, 121.380, or 135.439.

Interim Action

The FAA considers this AD interim action. If final action is later identified, the FAA might consider further rulemaking then.

FAA's Justification and Determination of the Effective Date

Section 553(b)(3)(B) of the Administrative Procedure Act (5 U.S.C.) authorizes agencies to dispense with notice and comment procedures for rules when the agency, for ''good cause'' finds that those procedures are ''impracticable, unnecessary, or contrary to the public interest.'' Under this section, an agency, upon finding good cause, may issue a final rule without seeking comment prior to the rulemaking.

An unsafe condition exists that requires the immediate adoption of this AD without providing an opportunity for public comments prior to adoption. The FAA has found that the risk to the flying public justifies waiving notice and comment prior to adoption of this rule because the required corrective action must be completed before further flight. Therefore, notice and opportunity for prior public comment are impracticable and contrary to public interest pursuant to 5 U.S.C. 553(b)(3)(B). In addition, for the reasons stated above, the FAA finds that good cause exists pursuant to 5 U.S.C. 553(d) for making this amendment effective in less than one month.

Comments Invited

This AD is a final rule that involves requirements affecting flight safety, and the FAA did not provide you with notice and an opportunity to provide your comments prior to it becoming effective. However, the FAA invites you to participate in this rulemaking by submitting written comments, data, or views. The most helpful comments reference a specific portion of the AD, explain the reason for any recommended change, and include supporting data. To ensure the docket does not contain duplicate comments, commenters should send only one copy of written comments, or if comments are filed electronically, commenters should submit them only one time.

Except for Confidential Business Information (CBI) as described in the following paragraph, and other information as described in 14 CFR 11.35, the FAA will file in the docket all comments received, as well as a report summarizing each substantive public contact with FAA personnel concerning this rulemaking during the comment period. The FAA will consider all the comments received and may conduct additional rulemaking based on those comments.

Confidential Business Information

CBI is commercial or financial information that is both customarily and actually treated as private by its owner. Under the Freedom of Information Act (FOIA) (5 U.S.C. 552), CBI is exempt from public disclosure. If your comments responsive to this final rule contain commercial or financial information that is customarily treated as private, that you actually treat as private, and that is relevant or responsive to this final rule, it is important that you clearly designate the submitted comments as CBI. Please mark each page of your submission containing CBI as ''PROPIN.'' The FAA will treat such marked submissions as confidential under the FOIA, and they will not be placed in the public docket of this final rule. Submissions containing CBI should be sent to Kuethe Harmon, Safety Management Program Manager, DSCO Branch, Compliance & Airworthiness Division, FAA, 10101 Hillwood Pkwy., Fort Worth, TX 76177; telephone 817–222- 5198; email *kuethe.harmon@faa.gov.* Any commentary that the FAA receives which is not specifically designated as CBI will be placed in the public docket for this rulemaking.

Regulatory Flexibility Act

The requirements of the Regulatory Flexibility Act (RFA) do not apply when an agency finds good cause pursuant to 5 U.S.C. 553 to adopt a rule without prior notice and comment. Because FAA has determined that it has good cause to adopt this rule without notice and comment, RFA analysis is not required.

Costs of Compliance

The FAA estimates that this AD affects 96 helicopters of U.S. registry. Labor rates are estimated at $85 per work-hour. Based on these numbers, the FAA estimates that operators may incur the following costs in order to comply with this AD.

For Model 412 and 412EP helicopters, revising the existing RFM for your helicopter takes about 0.5 work-hour for an estimated cost of $43 per helicopter and $4,128 for the U.S. fleet.

For Model 412CF helicopters, there are no costs of compliance associated with this AD because there are no helicopters with this type certificate on the U.S. Registry.

Authority for This Rulemaking

Title 49 of the United States Code specifies the FAA's authority to issue rules on aviation safety. Subtitle I, section 106, describes the authority of the FAA Administrator. Subtitle VII: Aviation Programs describes in more detail the scope of the Agency's authority.

The FAA is issuing this rulemaking under the authority described in Subtitle VII, Part A, Subpart III, Section 44701: General requirements. Under that section, Congress charges the FAA with promoting safe flight of civil aircraft in air commerce by prescribing regulations for practices, methods, and procedures the Administrator finds necessary for safety in air commerce. This regulation is within the scope of that authority because it addresses an unsafe condition that is likely to exist or develop on products identified in this rulemaking action.

Regulatory Findings

This AD will not have federalism implications under Executive Order 13132. This AD will not have a substantial direct effect on the States, on the relationship between the national government and the States, or on the distribution of power and responsibilities among the various levels of government.

For the reasons discussed above, I certify that this AD:

(1) Is not a ''significant regulatory action'' under Executive Order 12866, and

(2) Will not affect intrastate aviation in Alaska.

List of Subjects in 14 CFR Part 39

Air transportation, Aircraft, Aviation safety, Incorporation by reference, Safety.

Adoption of the Amendment

Accordingly, under the authority delegated to me by the Administrator, the FAA amends 14 CFR part 39 as follows:

PART 39—AIRWORTHINESS DIRECTIVES

■ 1. The authority citation for part 39 continues to read as follows:

Authority: 49 U.S.C. 106(g), 40113, 44701.

§ 39.13 Amended]

■ 2. The FAA amends § 39.13 by adding the following new airworthiness directive:

2020–22–07 Bell Textron Inc. (Type Certificate Previously Held by Bell Helicopter Textron Inc.): Amendment 39–21303; Docket No. FAA–2020–0921; Project Identifier AD–2020–00323–R.

(a) Effective Date

This AD is effective November 18, 2020.

(b) Affected ADs

None.

(c) Applicability

This airworthiness directive (AD) applies to Bell Textron Inc. (Type Certificate previously held by Bell Helicopter Textron Inc.) (Bell) Model 412, 412CF, and 412EP helicopters, certificated in any category.

Note 1 to paragraph (c): Helicopters with a 412EPI or 412EPX designation are Model 412EP helicopters.

(d) Subject

Joint Aircraft System Component (JASC): 5400, Nacelle/Pylon Structure.

(e) Unsafe Condition

This AD was prompted by an accident and multiple reports of a cracked main gearbox (MGB) support case. The FAA is issuing this AD to address excessive pylon pitch vibrations. The unsafe condition, if not addressed, could result in structural failure of the MGB support case and subsequent reduced control of the helicopter.

(f) Compliance

Comply with this AD within the compliance times specified, unless already done.

(g) Required Actions

Before further flight:

(1) For Bell Model 412 helicopters with serial number (S/N) 33001 through 33107 inclusive, S/N 33108 through 33213 inclusive, S/N 34001 through 34024 inclusive, or S/N 36001 through 36019 inclusive, revise Section 2, Normal Procedures, under both ''BEFORE TAKEOFF'' and ''IN–FLIGHT OPERATION(S)'' of the existing Rotorcraft Flight Manual (RFM) for your helicopter by adding the information in Figure 1 to paragraph (g)(1) of this AD or by adding this information under both ''BEFORE TAKEOFF'' and ''IN–FLIGHT OPERATION(S)'' of the following as applicable for your helicopter: Bell 412 BHT–412–FM–1 RFM, Revision 26; or Bell 412 BHT–412–FM–2 RFM, Revision 13, each dated August 19, 2020. Using a different document with information identical to this information under both ''BEFORE TAKEOFF'' and ''IN–FLIGHT OPERATION(S)'' in the RFM revision specified in this paragraph for your helicopter is acceptable for compliance with the requirements of this paragraph.

CAUTION: LARGE STEADY STATE FORWARD CYCLIC DISPLACEMENTS IN COMBINATION WITH COLLECTIVE INPUT WHILE AT 100% RPM WITH ANY PART OF THE SKIDS TOUCHING THE GROUND MAY RESULT IN A SUDDEN INCREASE IN ONE PER REV VERTICAL VIBRATIONS. IF THIS OCCURS IMMEDIATELY REDUCE FORWARD CYCLIC INPUT AND IF NECESSARY REDUCE COLLECTIVE AND ROTOR RPM TO STOP THE VIBRATIONS.

Figure 1 to Paragraph (g)(1)

(2) For Bell Model 412 helicopters with S/N 36020 through 36086 inclusive, and for Bell Model 412EP helicopters with S/N 36087 through 36999 inclusive, S/N 37002 through 37999 inclusive, S/N 38001 through 38999 inclusive, or S/N 39101 through 39999, revise Section 2, Normal Procedures, under both ''BEFORE TAKEOFF'' and ''IN–FLIGHT OPERATIONS'' of the existing RFM for your helicopter by adding the information in Figure 2 to paragraph (g)(2) of this AD or by adding this information under both ''BEFORE TAKEOFF'' and ''IN–FLIGHT OPERATIONS'' of the following as applicable for your helicopter: Bell 412 BHT–412–FM–3 RFM, Revision 20; Bell 412EP BHT–412–FM–4 RFM, Revision 37; Bell 412EPI BHT–412–FM–5 RFM, Revision 9; or Subaru Bell 412EPX BHT–412–FM–6 RFM, Revision 5, each dated August 19, 2020. Using a different document with information identical to this information under both ''BEFORE TAKEOFF'' and ''IN–FLIGHT OPERATIONS'' in the RFM revision specified in this paragraph for your helicopter is acceptable for compliance with the requirements of this paragraph.

CAUTION: LARGE STEADY STATE FORWARD CYCLIC DISPLACEMENTS IN COMBINATION WITH COLLECTIVE INPUT WHILE AT 100/103% RPM WITH ANY PART OF THE SKIDS TOUCHING THE GROUND MAY RESULT IN A SUDDEN INCREASE IN ONE PER REV VERTICAL VIBRATIONS. IF THIS OCCURS IMMEDIATELY REDUCE FORWARD CYCLIC INPUT AND IF NECESSARY REDUCE COLLECTIVE AND ROTOR RPM TO STOP THE VIBRATIONS.

Figure 2 to Paragraph (g)(2)

(3) For Bell Model 412CF helicopters, revise Section 2, Normal Procedures, under both ''BEFORE TAKEOFF'' and ''IN–FLIGHT OPERATIONS'' of the existing RFM for your helicopter by adding the information in Figure 1 to paragraph (g)(1) of this AD. Using a different document with information identical to that contained in Figure 1 to paragraph (g)(1) of this AD is acceptable for compliance with the requirements of this paragraph.

(4) The actions required by paragraphs (g)(1) through (3) of this AD may be performed by the owner/operator (pilot) holding at least a private pilot certificate and must be entered into the aircraft records showing compliance with this AD in accordance with 14 CFR 43.9(a)(1) through (4) and 14 CFR 91.417(a)(2)(v). The record must be maintained as required by 14 CFR 91.417, 121.380, or 135.439.

(h) Alternative Methods of Compliance (AMOCs)

(1) The Manager, DSCO Branch, FAA, has the authority to approve AMOCs for this AD, if requested using the procedures found in 14 CFR 39.19. In accordance with 14 CFR 39.19, send your request to your principal inspector or local Flight Standards District Office, as appropriate. If sending information directly to the manager of the certification office, send it to the attention of the person identified in paragraph (i) of this AD. Information may be emailed to: *9-ASW-190-COS@faa.gov.*

(2) Before using any approved AMOC, notify your appropriate principal inspector, or lacking a principal inspector, the manager of the local flight standards district office/certificate holding district office.

(i) Related Information

For more information about this AD, contact Kuethe Harmon, Safety Management Program Manager, DSCO Branch, Compliance & Airworthiness Division, FAA, 10101 Hillwood Pkwy., Fort Worth, TX 76177; telephone 817–222–5198; email *kuethe.harmon@faa.gov.*

(j) Material Incorporated by Reference

(1) The Director of the Federal Register approved the incorporation by reference (IBR) of the service information listed in this paragraph under 5 U.S.C. 552(a) and 1 CFR part 51.

(2) You must use this service information as applicable to do the actions required by this AD, unless the AD specifies otherwise.

(i) Section 2, Normal Procedures, of Bell 412 BHT–412–FM–1 Rotorcraft Flight Manual (RFM), Revision 26, dated August 19, 2020.

(ii) Section 2, Normal Procedures, of Bell 412 BHT–412–FM–2 RFM, Revision 13, dated August 19, 2020.

(iii) Section 2, Normal Procedures, of Bell 412 BHT–412–FM–3 RFM, Revision 20, dated August 19, 2020.

(iv) Section 2, Normal Procedures, of Bell 412EP BHT–412–FM–4 RFM, Revision 37, dated August 19, 2020.

(v) Section 2, Normal Procedures, of Bell 412EPI BHT–412–FM–5 RFM, Revision 9, dated August 19, 2020.

(vi) Section 2, Normal Procedures, of Subaru Bell 412EPX BHT–412–FM–6 RFM, Revision 5, dated August 19, 2020.

(3) For service information identified in this AD, contact Bell Textron, Inc., P.O. Box 482, Fort Worth, TX 76101; telephone 817–280–3391; fax 817–280–6466; or at *https://www.bellcustomer.com.*

(4) You may view this service information at the FAA, Office of the Regional Counsel, Southwest Region, 10101 Hillwood Pkwy., Room 6N–321, Fort Worth, TX 76177. For information on the availability of this material at the FAA, call 817–222–5110.

(5) You may view this service information that is incorporated by reference at the National Archives and Records Administration (NARA). For information on the availability of this material at NARA, email *fedreg.legal@nara.gov,* or go to: *https://www.archives.gov/federal-register/cfr/ibr-locations.html.*

Issued on October 15, 2020.

Gaetano A. Sciortino,

Deputy Director for Strategic Initiatives, Compliance & Airworthiness Division, Aircraft Certification Service.

[FR Doc. 2020–24258 Filed 11–2–20; 8:45 am]

BILLING CODE 4910–13–P

DEPARTMENT OF TRANSPORTATION

Federal Aviation Administration

14 CFR Part 39

[Docket No. FAA–2020–0462; Product Identifier 2019–SW–021–AD; Amendment 39–21309; AD 2020–22–13]

RIN 2120–AA64

Airworthiness Directives; Airbus Helicopters

AGENCY: Federal Aviation Administration (FAA), Department of Transportation (DOT).

ACTION: Final rule.

SUMMARY: The FAA is adopting a new airworthiness directive (AD) for certain Airbus Helicopters Model AS332C1 and AS332L1 helicopters. This AD was prompted by a report that the affected helicopters use the same ''flight/ground'' logic signal, instead of independent redundant signals. This AD requires amending the emergency procedures of the existing rotorcraft flight manual (RFM) for your helicopter, a wiring modification of the ''flight/ground'' logic signal source of the attitude and heading reference system (AHRS) 1, and then removal of the amendment to the existing RFM for your helicopter. The FAA is issuing this AD to address the unsafe condition on these products.

DATES: This AD is effective December 8, 2020.

The Director of the Federal Register approved the incorporation by reference of a certain publication listed in this AD as of December 8, 2020.

ADDRESSES: For service information identified in this final rule, contact Airbus Helicopters, 2701 N Forum Drive, Grand Prairie, TX 75052; phone: (972) 641–0000 or (800) 232–0323; fax: (972) 641–3775; or at *https://*

www.airbus.com/helicopters/services/hnical-support.html. You may view this service information at the FAA, Office of the Regional Counsel, Southwest Region, 10101 Hillwood Pkwy., Room 6N–321, Fort Worth, TX 76177. For information on the availability of this material at the FAA, call 817–222–5110.

Examining the AD Docket

You may examine the AD docket on the internet at *https://www.regulations.gov* by searching for and locating Docket No. FAA–2020–0462; or in person at Docket Operations between 9 a.m. and 5 p.m., Monday through Friday, except Federal holidays. The AD docket contains this final rule, the European Aviation Safety Agency (now European Union Aviation Safety Agency) (EASA) AD, any comments received, and other information. The street address for Docket Operations is listed above.

FOR FURTHER INFORMATION CONTACT: George Schwab, Aviation Safety Engineer, Safety Management Section, Rotorcraft Standards Branch, FAA, 10101 Hillwood Pkwy., Fort Worth, TX 76177; phone: 817–222–5110; email: *george.schwab@faa.gov.*

SUPPLEMENTARY INFORMATION:

Discussion

The FAA issued a notice of proposed rulemaking (NPRM) to amend 14 CFR part 39 by adding an AD that would apply to certain Airbus Helicopters Model AS332C1 and AS332L1 helicopters. The NPRM published in the **Federal Register** on June 4, 2020 (85 FR 34375). The NPRM was prompted by a report that the affected helicopters use the same ''flight/ground'' logic signal instead of independent redundant signals. The NPRM proposed to require amending the emergency procedures of the existing RFM for your helicopter, a wiring modification of the ''flight/ground'' logic signal source of the AHRS 1, and then removal of the amendment to the existing RFM for your helicopter. The FAA is issuing this AD to address certain helicopters that use the same ''flight/ground'' logic signal, instead of independent redundant signals. If both AHRS incorrectly receive ''ground'' status in flight, as a result for instance of a single failure, this will generate consistent erroneous computation of the attitudes and vertical speed during helicopter maneuvers with consequent incorrect flight data indications to the flight crew on both primary displays. Erroneous flight information could lead to increased workload for the flight crew when the upper modes of the automatic flight control system are not engaged, possibly resulting in reduced control of the helicopter during high speed maneuvers in instrumental meteorological conditions (IMC).

EASA, which is the Technical Agent for the Member States of the European Union, has issued EASA AD 2019–0021, dated February 1, 2019; corrected February 4, 2019 (EASA AD 2019–0021) (referred to after this as the Mandatory Continuing Airworthiness Information, or ''the MCAI''), to correct an unsafe condition for certain Airbus Helicopters Model AS332C1 and AS332L1 helicopters. EASA advises that the AHRS 1 and AHRS 2 installed on AS332C1e and AS332L1e helicopters use the same ''flight/ground'' logic signal, instead of independent redundant signals, as required by the original design specification. If both AHRS incorrectly receive ''ground'' status in flight, as a result for instance of a single failure, this will generate consistent erroneous computation of the attitudes and vertical speed during helicopter maneuvers with consequent incorrect flight data indications to the flight crew on both primary displays. EASA AD 2019–0021 states that this condition, if not corrected, could lead to increased workload for the flight crew when the upper modes of the automatic flight control system are not engaged, possibly resulting in reduced control of the helicopter during high speed maneuvers in IMC.

EASA further advises that Airbus Helicopters has issued rush revisions to the RFM, and developed a modification of the wiring harness, ensuring independent sources of the ''flight/ground'' logic signal for both AHRS. EASA AD 2019–0021 requires amending the emergency procedures of the applicable RFM, doing the modification of the wiring harness, and then removing the amendment to the RFM.

You may examine the MCAI in the AD docket on the internet at *https://www.regulations.gov* by searching for and locating Docket No. FAA–2020–0462.

Comments

The FAA gave the public the opportunity to participate in developing this final rule. The FAA received no comments on the NPRM or on the determination of the cost to the public.

Conclusion

The FAA reviewed the relevant data and determined that air safety and the public interest require adopting this final rule as proposed, except for minor editorial changes.

The FAA has determined that these minor changes:

- Are consistent with the intent that was proposed in the NPRM for addressing the unsafe condition; and
- Do not add any additional burden upon the public than was already proposed in the NPRM.

Related Service Information Under 1 CFR Part 51

Airbus Helicopters has issued Alert Service Bulletin No. AS332–34.00.60, Revision 1, dated March 29, 2019. This service information describes procedures for a wiring modification of the ''flight/ground'' logic signal source of the AHRS 1, which changes the ''flight/ground'' logic signal source to independent redundant signals.

This service information is reasonably available because the interested parties have access to it through their normal course of business or by the means identified in the **ADDRESSES** section.

Other Related Service Information

Airbus Helicopters has issued Alert Service Bulletin No. AS332–34.00.60, Revision 0, dated December 6, 2018. The service information describes procedures for a wiring modification of the ''flight/ground'' logic signal source of the AHRS 1, which changes the ''flight/ground'' logic signal source to independent redundant signals. Airbus Service Bulletin No. AS332–34.00.60, Revision 1, dated March 29, 2019, clarifies the procedures for the post-installation test in Alert Service Bulletin No. AS332–34.00.60, Revision 0, dated December 6, 2018.

Differences Between This AD and the MCAI or Service Information

EASA AD 2019–0021 specifies to do the modification within 6 months. This AD requires the modification be done within 100 hours time-in-service or before intentional flight into IMC, whichever occurs first. The FAA has determined this compliance time represents the maximum interval of time allowable for the affected helicopters to continue to safely operate before the modification is done.

Costs of Compliance

The FAA estimates that this AD affects 8 helicopters of U.S. registry. The FAA estimates the following costs to comply with this AD:

ESTIMATED COSTS FOR REQUIRED ACTIONS

Labor cost	Parts cost	Cost per product	Cost on U.S. operators
7 work-hours × $85 per hour = $595	$40	$635	$5,080

Authority for This Rulemaking

Title 49 of the United States Code specifies the FAA's authority to issue rules on aviation safety. Subtitle I, section 106, describes the authority of the FAA Administrator. Subtitle VII: Aviation Programs, describes in more detail the scope of the Agency's authority.

The FAA is issuing this rulemaking under the authority described in Subtitle VII, Part A, Subpart III, Section 44701: General requirements. Under that section, Congress charges the FAA with promoting safe flight of civil aircraft in air commerce by prescribing regulations for practices, methods, and procedures the Administrator finds necessary for safety in air commerce. This regulation is within the scope of that authority because it addresses an unsafe condition that is likely to exist or develop on products identified in this rulemaking action.

Regulatory Findings

This AD will not have federalism implications under Executive Order 13132. This AD will not have a substantial direct effect on the States, on the relationship between the national government and the States, or on the distribution of power and responsibilities among the various levels of government.

For the reasons discussed above, I certify that this AD:

(1) Is not a ''significant regulatory action'' under Executive Order 12866,

(2) Will not affect intrastate aviation in Alaska, and

(3) Will not have a significant economic impact, positive or negative, on a substantial number of small entities under the criteria of the Regulatory Flexibility Act.

List of Subjects in 14 CFR Part 39

Air transportation, Aircraft, Aviation safety, Incorporation by reference, Safety.

Adoption of the Amendment

Accordingly, under the authority delegated to me by the Administrator, the FAA amends 14 CFR part 39 as follows:

PART 39—AIRWORTHINESS DIRECTIVES

■ 1. The authority citation for part 39 continues to read as follows:

Authority: 49 U.S.C. 106(g), 40113, 44701.

§ 39.13 [Amended]

■ 2. The FAA amends § 39.13 by adding the following new airworthiness directive:

2020–22–13 Airbus Helicopters: Amendment 39–21309; Docket No. FAA–2020–0462; Product Identifier 2019–SW–021–AD.

(a) Effective Date

This airworthiness directive (AD) is effective December 8, 2020.

(b) Affected ADs

None.

(c) Applicability

This AD applies to Airbus Helicopters Model AS332C1 and AS332L1 helicopters, certificated in any category, all manufacturer serial numbers, equipped with an Advanced Helicopter Cockpit & Avionics System (AHCAS), except helicopters that have Airbus Helicopters modification 0728576 embodied in production.

(d) Subject

Joint Aircraft Service Component (JASC) Code 3420, Attitude and direction data system.

(e) Reason

This AD was prompted by a report that the affected helicopters use the same ''flight/ground'' logic signal, instead of independent redundant signals. The FAA is issuing this AD to address certain helicopters that use the same ''flight/ground'' logic signal, instead of independent redundant signals. If both attitude and heading reference systems (AHRS) incorrectly receive ''ground'' status in flight, as a result for instance of a single failure, this will generate consistent erroneous computation of the attitudes and vertical speed during helicopter maneuvers with consequent incorrect flight data indications to the flight crew on both primary displays. Erroneous flight information could lead to increased workload for the flight crew when the upper modes of the automatic flight control system are not engaged, possibly resulting in reduced control of the helicopter during high speed maneuvers in instrumental meteorological conditions (IMC).

(f) Compliance

Comply with this AD within the compliance times specified, unless already done.

(g) Required Actions

(1) Within 30 days after the effective date of this AD: Amend the emergency procedures of the existing rotorcraft flight manual (RFM) for your helicopter by inserting the supplemental text specified in figure 1 to paragraph (g)(1) of this AD, immediately following paragraph 9 GROUND/FLIGHT LOGIC FAULT.

Figure 1 to Paragraph (g)(1) - *Supplemental Text for Paragraph 9 GROUND/FLIGHT LOGIC FAULT of the RFM*

Symptoms	Condition	Consequences and procedures
GRD/FLT (Post-MOD 07 23817)		**Procedure:** The following NOTE is added: **NOTE** **In the event of GRD/FLT, both AHRS may provide erroneous attitude and vertical speed while ISIS remains reliable. Should this discrepancy occur it is recommended to:** **- Keep on (or activate) the upper modes.** **- In IMC flight limit the IAS (< 120 kt) and bank angle (< 20°).** The rest of the paragraph is unchanged.

(2) Within 100 hours time-in-service or before intentional flight into IMC, whichever occurs first after the effective date of this AD, do the wiring modification of the ''flight/ground'' logic signal source of the AHRS 1 in accordance with the Accomplishment Instructions of Airbus Helicopters Alert Service Bulletin No. AS332–34.00.60, Revision 1, dated March 29, 2019. After completion of the wiring modification, the RFM amendment required by paragraph (g)(1) of this AD must be removed from the existing RFM for your helicopter.

(h) Special Flight Permit

Special flight permits may be issued in accordance with 14 CFR 21.197 and 21.199 to operate the helicopter to a location where the helicopter can be modified (if the operator elects to do so), provided the helicopter is operated under visual flight rules only.

(i) Credit for Previous Actions

This paragraph provides credit for the actions specified in paragraph (g) of this AD, if those actions were performed before the effective date of this AD using Airbus Helicopters Alert Service Bulletin No. AS332–34.00.60, Revision 0, dated December 6, 2018.

(j) Alternative Methods of Compliance (AMOCs)

(1) The Manager, Rotorcraft Standards Branch, FAA, may approve AMOCs for this AD. Send your proposal to: George Schwab, Aviation Safety Engineer, Safety Management Section, Rotorcraft Standards Branch, FAA, 10101 Hillwood Pkwy., Fort Worth, TX 76177; phone: 817–222–5110; email: *9-ASW-FTW-AMOC-Requests@faa.gov.*

(2) For operations conducted under a 14 CFR part 119 operating certificate or under 14 CFR part 91, subpart K, notify your principal inspector or lacking a principal inspector, the manager of the local flight standards district office or certificate holding district office, before operating any aircraft complying with this AD through an AMOC.

(k) Related Information

(1) The subject of this AD is addressed in European Aviation Safety Agency (now European Union Aviation Safety Agency) (EASA) AD 2019–0021, dated February 1, 2019; corrected February 4, 2019. This EASA AD may be found in the AD docket on the internet at *https://www.regulations.gov* by searching for and locating Docket No. FAA–2020–0462.

(2) For more information about this AD, contact George Schwab, Aviation Safety Engineer, Safety Management Section, Rotorcraft Standards Branch, FAA, 10101 Hillwood Pkwy., Fort Worth, TX 76177; phone: 817–222–5110; email: *george.schwab@faa.gov.*

(3) Service information identified in this AD that is not incorporated by reference is available at the addresses specified in paragraphs (l)(3) and (4) of this AD.

(l) Material Incorporated by Reference

(1) The Director of the Federal Register approved the incorporation by reference (IBR) of the service information listed in this paragraph under 5 U.S.C. 552(a) and 1 CFR part 51.

(2) You must use this service information as applicable to do the actions required by this AD, unless this AD specifies otherwise.

(i) Airbus Helicopters Alert Service Bulletin No. AS332–34.00.60, Revision 1, dated March 29, 2019.

(ii) [Reserved]

(3) For service information identified in this AD, contact Airbus Helicopters, 2701 N Forum Drive, Grand Prairie, TX 75052; phone: (972) 641–0000 or (800) 232–0323; fax: (972) 641–3775; or at *https://www.airbus.com/helicopters/services/support.html.*

(4) You may view this service information at the FAA, Office of the Regional Counsel, Southwest Region, 10101 Hillwood Pkwy, Room 6N–321, Fort Worth, TX 76177. For information on the availability of this material at the FAA, call 817–222–5110.

(5) You may view this service information that is incorporated by reference at the National Archives and Records Administration (NARA). For information on the availability of this material at NARA, email *fedreg.legal@nara.gov,* or go to: *https://www.archives.gov/federal-register/cfr/ibr-locations.html.*

Issued on October 19, 2020.

Lance T. Gant,

Director, Compliance & Airworthiness Division, Aircraft Certification Service.

[FR Doc. 2020–24260 Filed 11–2–20; 8:45 am]

BILLING CODE 4910–13–P

DEPARTMENT OF TRANSPORTATION

Federal Aviation Administration

14 CFR Part 39

[Docket No. FAA–2020–0744; Project Identifier 2019–CE–056–AD; Amendment 39–21285; AD 2020–21–12]

RIN 2120–AA64

Airworthiness Directives; Pilatus Aircraft Ltd. Airplanes

AGENCY: Federal Aviation Administration (FAA), DOT.

ACTION: Final rule.

SUMMARY: The FAA is adopting a new airworthiness directive (AD) for certain Pilatus Aircraft Ltd Model PC–24 airplanes. This AD was prompted by mandatory continuing airworthiness information (MCAI) issued by the aviation authority of another country to identify and correct an unsafe condition on an aviation product. The MCAI describes the unsafe condition as the vinyl grommets on the upper panel assembly on the left-hand (LH) and right-hand (RH) emergency exits becoming rigid after exposure to low temperatures, which could result in failure of the emergency exits to open during an evacuation. This AD requires replacing the grommets. The FAA is issuing this AD to address the unsafe condition on these products.

DATES: This AD is effective December 8, 2020.

The Director of the Federal Register approved the incorporation by reference of a certain publication listed in this AD as of December 8, 2020.

ADDRESSES: For service information identified in this final rule, contact Pilatus Aircraft Ltd., Customer Technical Support (MCC), P.O. Box 992, CH–6371 Stans, Switzerland; telephone: +41 (0)41 619 67 74; fax: +41 (0)41 619 67 73; email: *Techsupport@pilatus-aircraft.com;* internet: *https://www.pilatus-aircraft.com/en.* You may view this service information at the FAA, Airworthiness Products Section, Operational Safety Branch, 901 Locust, Kansas City, MO 64106. For information on the availability of this material at the FAA, call 816–329–4148. It is also available on the internet at *https://www.regulations.gov* by searching for and locating Docket No. FAA–2020–0744.

Examining the AD Docket

You may examine the AD docket on the internet at *https://www.regulations.gov* by searching for and locating Docket No. FAA–2020–0744 or in person at Docket Operations between 9 a.m. and 5 p.m., Monday through Friday, except Federal holidays. The AD docket contains this final rule, the MCAI, any comments received, and other information. The address for Docket Operations is U.S. Department of Transportation, Docket Operations, M–30, West Building Ground Floor, Room W12–140, 1200 New Jersey Avenue SE, Washington, DC 20590.

FOR FURTHER INFORMATION CONTACT: Doug Rudolph, Aerospace Engineer, FAA, General Aviation & Rotorcraft Section, International Validation Branch, 901 Locust, Room 301, Kansas City, Missouri 64106; telephone: (816) 329–4059; fax: (816) 329–4090; email: *doug.rudolph@faa.gov.*

SUPPLEMENTARY INFORMATION:

Discussion

The FAA issued a notice of proposed rulemaking (NPRM) to amend 14 CFR part 39 by adding an AD that would apply to Pilatus Aircraft Ltd Model PC–24 airplanes with an emergency exit grommet part number (P/N) 944.87.32.001 installed. The NPRM published in the **Federal Register** on August 7, 2020 (85 FR 47919). The NPRM proposed to correct an unsafe condition of the specified products and was based on MCAI originated by the European Union Aviation Safety Agency (EASA), which is the Technical Agent for the Member States of the European Union. EASA issued AD No. 2019–0293, dated December 4, 2019 (referred to after this as ''the MCAI''), which states:

> After exposure to low temperatures, the vinyl grommets which hold the upper panel assembly in position on the left-hand and right-hand emergency exits were found to become rigid.
>
> This condition, if not corrected, could result in failure of the emergency exits to open during an evacuation, possibly resulting in injury to occupants.
>
> To address this potential unsafe condition, Pilatus issued the [service bulletin] SB to provide modification instructions.
>
> For the reason described above, this [EASA] AD requires replacement of affected parts with serviceable parts, as defined in this AD, and prohibits (re-)installation of affected parts.

You may obtain further information by examining the MCAI in the AD docket on the internet at *https://www.regulations.gov* by searching for and locating Docket No. FAA–2020–0744.

Comments

The FAA gave the public the opportunity to participate in developing this final rule. The FAA received no comments on the NPRM or on the determination of the cost to the public.

Conclusion

The FAA reviewed the relevant data and determined that air safety and the public interest require adopting this final rule as proposed.

Related Service Information Under 1 CFR Part 51

The FAA reviewed Pilatus PC–24 Service Bulletin No. 25–005, dated August 12, 2019. The service information contains procedures for replacing the grommets that are used to hold the upper panel assembly in position on the LH and RH emergency exits with different part-numbered grommets. This service information is reasonably available because the interested parties have access to it through their normal course of business or by the means identified in the **ADDRESSES** section.

Costs of Compliance

The FAA estimates that this AD affects 39 products of U.S. registry. The FAA also estimates that it will take 1.0 work-hour per product to comply with the requirements of this AD. The average labor rate is $85 per work-hour. Required parts will cost about $30 per product.

Based on these figures, the FAA estimates the cost of the AD on U.S. operators to be $4,485, or $115 per product.

According to the manufacturer, some of the costs of this AD may be covered under warranty, thereby reducing the cost impact on affected individuals. The FAA does not control warranty coverage for affected individuals. As a result, the FAA has included all costs in this cost estimate.

Authority for This Rulemaking

Title 49 of the United States Code specifies the FAA's authority to issue rules on aviation safety. Subtitle I, section 106, describes the authority of the FAA Administrator. Subtitle VII: Aviation Programs, describes in more

detail the scope of the Agency's authority.

The FAA is issuing this rulemaking under the authority described in Subtitle VII, Part A, Subpart III, Section 44701: General requirements. Under that section, Congress charges the FAA with promoting safe flight of civil aircraft in air commerce by prescribing regulations for practices, methods, and procedures the Administrator finds necessary for safety in air commerce. This regulation is within the scope of that authority because it addresses an unsafe condition that is likely to exist or develop on products identified in this rulemaking action.

Regulatory Findings

This AD will not have federalism implications under Executive Order 13132. This AD will not have a substantial direct effect on the States, on the relationship between the national government and the States, or on the distribution of power and responsibilities among the various levels of government.

For the reasons discussed above, I certify this AD:

(1) Is not a ''significant regulatory action'' under Executive Order 12866,

(2) Will not affect intrastate aviation in Alaska, and

(3) Will not have a significant economic impact, positive or negative, on a substantial number of small entities under the criteria of the Regulatory Flexibility Act.

List of Subjects in 14 CFR Part 39

Air transportation, Aircraft, Aviation safety, Incorporation by reference, Safety.

Adoption of the Amendment

Accordingly, under the authority delegated to me by the Administrator, the FAA amends 14 CFR part 39 as follows:

PART 39—AIRWORTHINESS DIRECTIVES

■ 1. The authority citation for part 39 continues to read as follows:

Authority: 49 U.S.C. 106(g), 40113, 44701.

§ 39.13 [Amended]

■ 2. The FAA amends § 39.13 by adding the following new airworthiness directive (AD):

2020–21–12 Pilatus Aircraft Ltd: Amendment 39–21285; Docket No. FAA–2020–0744; Project Identifier 2019–CE–056–AD.

(a) Effective Date

This AD is effective December 8, 2020.

(b) Affected ADs

None.

(c) Applicability

This AD applies to Pilatus Aircraft Ltd. Model PC–24 airplanes, all serial numbers, with an emergency exit grommet part number (P/N) 944.87.32.001 installed, certificated in any category.

(d) Subject

Joint Aircraft System Component (JASC) Code 52: Doors.

(e) Unsafe Condition

This AD was prompted by a report that after exposure to low temperatures, the vinyl grommets that hold the upper panel assembly in position on the left-hand (LH) and right-hand (RH) emergency exits can become rigid. This unsafe condition, if not addressed, could result in failure of the emergency exits to open during an evacuation.

(f) Actions and Compliance

Unless already done, do the following actions in paragraphs (f)(1) and (2) of this AD.

(1) Within 3 months after the effective date of this AD, replace each grommet P/N 944.87.32.001 holding the upper panel assembly in position on the LH and RH emergency exits with grommet P/N 525.26.24.035 in accordance with the Accomplishment Instructions, section 3.B., of Pilatus Aircraft Ltd PC–24 Service Bulletin No. 25–005, dated August 12, 2019.

(2) As of the effective date of this AD, do not install a grommet P/N 944.87.32.001 on any airplane.

(g) Alternative Methods of Compliance (AMOCs)

The Manager, International Validation Branch, FAA, has the authority to approve AMOCs for this AD, if requested using the procedures found in 14 CFR 39.19. Send information to ATTN: Doug Rudolph, Aerospace Engineer, FAA, General Aviation & Rotorcraft Section, International Validation Branch, 901 Locust, Room 301, Kansas City, Missouri 64106; telephone: (816) 329–4059; fax: (816) 329–4090; email: *doug.rudolph@faa.gov.* Before using any approved AMOC on any airplane to which the AMOC applies, notify your appropriate principal inspector (PI) in the FAA Flight Standards District Office (FSDO), or lacking a PI, your local FSDO. Before using any approved AMOC, notify your appropriate principal inspector, or lacking a principal inspector, the manager of the local flight standards district office/certificate holding district office.

(h) Related Information

Refer to European Union Aviation Safety Agency (EASA) AD No.: 2019–0293, dated December 4, 2019, for more information. You may examine the EASA AD in the AD docket on the internet at *https://www.regulations.gov* by searching for and locating Docket No. FAA–2020–0744.

(i) Material Incorporated by Reference

(1) The Director of the Federal Register approved the incorporation by reference (IBR) of the service information listed in this paragraph under 5 U.S.C. 552(a) and 1 CFR part 51.

(2) You must use this service information as applicable to do the actions required by this AD, unless the AD specifies otherwise.

(i) Pilatus PC–24 Service Bulletin No. 25–005, dated August 12, 2019.

(ii) [Reserved]

(3) For Pilatus Aircraft Ltd service information identified in this AD, contact Pilatus Aircraft Ltd., Customer Technical Support (MCC), P.O. Box 992, CH–6371 Stans, Switzerland; telephone: +41 (0)41 619 67 74; fax: +41 (0)41 619 67 73; email: *Techsupport@pilatus-aircraft.com;* internet: *https://www.pilatus-aircraft.com/en.*

(4) You may view this service information at the FAA, Airworthiness Products Section, Operational Safety Branch, 901 Locust, Kansas City, Missouri 64106. For information on the availability of this material at the FAA, call (816) 329–4148.

(5) You may view this service information that is incorporated by reference at the National Archives and Records Administration (NARA). For information on the availability of this material at NARA, email: *fedreg.legal@nara.gov,* or go to: *https://www.archives.gov/federal-register/cfr/ibr-locations.html.*

Issued on October 5, 2020.

Gaetano A. Sciortino,

Deputy Director for Strategic Initiatives, Compliance & Airworthiness Division, Aircraft Certification Service.

[FR Doc. 2020–24279 Filed 11–2–20; 8:45 am]

BILLING CODE 4910–13–P

DEPARTMENT OF TRANSPORTATION

Federal Aviation Administration

14 CFR Part 39

[Docket No. FAA–2020–0919; Project Identifier MCAI–2020–00637–R; Amendment 39–21300; AD 2020–22–04]

RIN 2120–AA64

Airworthiness Directives; Airbus Helicopters Deutschland GmbH

AGENCY: Federal Aviation Administration (FAA), DOT.

ACTION: Final rule; request for comments.

SUMMARY: The FAA is adopting a new airworthiness directive (AD) for all Airbus Helicopters Deutschland GmbH Model EC135P1, EC135P2, EC135P2+, EC135P3, EC135T1, EC135T2, EC135T2+, EC135T3, and EC635T2+ helicopters. This AD was prompted by reports of improper heat treatment of titanium (Ti)-bolts installed on the forward and aft tail rotor drive shafts, resulting in a broken Ti-bolt. This AD requires an inspection to determine if Ti-bolts installed on the forward and aft tail rotor drive shafts are affected parts,

and replacement if necessary, as specified in a European Union Aviation Safety Agency (EASA) AD, which is incorporated by reference. The FAA is issuing this AD to address the unsafe condition on these products.

DATES: This AD becomes effective November 18, 2020.

The Director of the Federal Register approved the incorporation by reference of a certain publication listed in this AD as of November 18, 2020.

The FAA must receive comments on this AD by December 18, 2020.

ADDRESSES: You may send comments, using the procedures found in 14 CFR 11.43 and 11.45, by any of the following methods:

- *Federal eRulemaking Portal:* Go to *https://www.regulations.gov.* Follow the instructions for submitting comments.
- *Fax:* 202–493–2251.
- *Mail:* U.S. Department of Transportation, Docket Operations, M–30, West Building Ground Floor, Room W12–140, 1200 New Jersey Avenue SE, Washington, DC 20590.
- *Hand Delivery:* Deliver to Mail address above between 9 a.m. and 5 p.m., Monday through Friday, except Federal holidays.

For material incorporated by reference (IBR) in this AD, contact the EASA, Konrad-Adenauer-Ufer 3, 50668 Cologne, Germany; phone: +49 221 8999 1000; email: *ADs@easa.europa.eu;* internet: *www.easa.europa.eu.* You may find this IBR material on the EASA website at *https://ad.easa.europa.eu.* You may view this IBR material at the FAA, Office of the Regional Counsel, Southwest Region, 10101 Hillwood Pkwy., Room 6N–321, Fort Worth, TX 76177. For information on the availability of this material at the FAA, call 817–222–5110. It is also available in the AD docket on the internet at *https://www.regulations.gov* by searching for and locating Docket No. FAA–2020–0919.

Examining the AD Docket

You may examine the AD docket on the internet at *https://www.regulations.gov* by searching for and locating Docket No. FAA–2020–0919; or in person at Docket Operations between 9 a.m. and 5 p.m., Monday through Friday, except Federal holidays. The AD docket contains this AD, any comments received, and other information. The street address for Docket Operations is listed above. Comments will be available in the AD docket shortly after receipt.

FOR FURTHER INFORMATION CONTACT: Kathleen Arrigotti, Aviation Safety Engineer, Large Aircraft Section, International Validation Branch, FAA, 2200 South 216th St., Des Moines, WA 98198; phone and fax: 206–231–3218; email: *kathleen.arrigotti@faa.gov.*

SUPPLEMENTARY INFORMATION:

Discussion

The EASA, which is the Technical Agent for the Member States of the European Union, has issued EASA AD 2020–0099, dated May 5, 2020 (EASA AD 2020–0099) (also referred to as the Mandatory Continuing Airworthiness Information, or ''the MCAI''), to correct an unsafe condition for all Airbus Helicopters Deutschland GmbH Model EC135P1, EC135P2, EC135P2+, EC135P3, EC135T1, EC135T2, EC135T2+, EC135T3, EC635P2+, EC635P3, EC635T1, EC635T2+, and EC635T3 helicopters. Model EC635P3, EC635P2+, EC635T1, and EC635T3 helicopters are not certificated by the FAA and are not included on the U.S. type certificate data sheet; this AD therefore does not include those helicopters in the applicability.

This AD was prompted by reports of improper heat treatment of Ti-bolts on the forward and aft tail rotor drive shafts, resulting in a broken Ti-bolt. The FAA is issuing this AD to address improper heat treatment of Ti-bolts on the forward and aft tail rotor drive shafts, which could result in rupture of a Ti-bolt installed in a critical location, possibly resulting in reduced control of the helicopter. See the MCAI for additional background information.

Related Service Information Under 1 CFR Part 51

EASA AD 2020–0099 describes procedures for an inspection to determine if Ti-bolts installed on the forward and aft tail rotor drive shafts are affected parts, and replacement of affected parts. This material is reasonably available because the interested parties have access to it through their normal course of business or by the means identified in the **ADDRESSES** section.

FAA's Determination

This product has been approved by the aviation authority of another country, and is approved for operation in the United States. Pursuant to the FAA's bilateral agreement with the State of Design Authority, the FAA has been notified of the unsafe condition described in the MCAI referenced above. The FAA is issuing this AD because the FAA evaluated all pertinent information and determined the unsafe condition exists and is likely to exist or develop on other products of the same type design.

Requirements of This AD

This AD requires accomplishing the actions specified in EASA AD 2020–0099 described previously, as incorporated by reference, except for any differences identified as exceptions in the regulatory text of this AD.

Explanation of Required Compliance Information

In the FAA's ongoing efforts to improve the efficiency of the AD process, the FAA initially worked with Airbus and EASA to develop a process to use certain EASA ADs as the primary source of information for compliance with requirements for corresponding FAA ADs. The FAA has since coordinated with other manufacturers and civil aviation authorities (CAAs) to use this process. As a result, EASA AD 2020–0099 is incorporated by reference in this final rule. This AD, therefore, requires compliance with EASA AD 2020–0099 in its entirety, through that incorporation, except for any differences identified as exceptions in the regulatory text of this AD. Using common terms that are the same as the heading of a particular section in the EASA AD does not mean that operators need comply only with that section. For example, where the AD requirement refers to ''all required actions and compliance times,'' compliance with this AD requirement is not limited to the section titled ''Required Action(s) and Compliance Time(s)'' in the EASA AD. Service information specified in EASA AD 2020–0099 that is required for compliance with EASA AD 2020–0099 is available on the internet at *https://www.regulations.gov* by searching for and locating Docket No. FAA–2020–0919.

FAA's Justification and Determination of the Effective Date

Section 553(b)(3)(B) of the Administrative Procedure Act (5 U.S.C.) authorizes agencies to dispense with notice and comment procedures for rules when the agency, for ''good cause'' finds that those procedures are ''impracticable, unnecessary, or contrary to the public interest.'' Under this section, an agency, upon finding good cause, may issue a final rule without seeking comment prior to the rulemaking.

An unsafe condition exists that requires the immediate adoption of this AD without providing an opportunity for public comments prior to adoption. The FAA has found that the risk to the flying public justifies waiving notice and comment prior to adoption of this rule because improper heat treatment of

Ti-bolts installed on the forward and aft tail rotor drive shafts could lead to rupture of a Ti-bolt installed in a critical location, possibly resulting in reduced control of the helicopter. In addition, the compliance time for the required action is shorter than the time necessary for the public to comment and for publication of the final rule. Therefore, the FAA finds good cause that notice and opportunity for prior public comment are impracticable. In addition, for the reasons stated above, the FAA finds that good cause exists pursuant to 5 U.S.C. 553(d) for making this amendment effective in less than 30 days.

Comments Invited

This AD is a final rule that involves requirements affecting flight safety and was not preceded by notice and an opportunity for public comment. However, the FAA invites you to send any written comments, data, or views about this AD. The most helpful comments reference a specific portion of the proposal, explain the reason for any recommended change, and include supporting data. To ensure the docket does not contain duplicate comments, commenters should submit only one copy of the comments. Send your comments to an address listed under the **ADDRESSES** section. Include ''Docket No. FAA2020–0919; Project Identifier MCAI–2020–00637–R at the beginning of your comments.

Except for Confidential Business Information (CBI) as described in the following paragraph, and other information as described in 14 CFR 11.35, the FAA will post all comments received, without change, as well as a report summarizing each substantive public contact with FAA personnel concerning this AD. The FAA will consider all comments received by the closing date for comments. The FAA may amend this AD because of those comments.

Confidential Business Information

CBI is commercial or financial information that is both customarily and actually treated as private by its owner. Under the Freedom of Information Act (FOIA) (5 U.S.C. 552), CBI is exempt from public disclosure. If your comments responsive to this AD contain commercial or financial information that is customarily treated as private, that you actually treat as private, and that is relevant or responsive to this AD, it is important that you clearly designate the submitted comments as CBI. Please mark each page of your submission containing CBI as ''PROPIN.'' The FAA will treat such marked submissions as confidential under the FOIA, and they will not be placed in the public docket of this AD. Submissions containing CBI should be sent to Kathleen Arrigotti, Aviation Safety Engineer, Large Aircraft Section, International Validation Branch, FAA, 2200 South 216th St., Des Moines, WA 98198; phone and fax: 206–231–3218; email: *kathleen.arrigotti@faa.gov.* Any commentary that the FAA receives that is not specifically designated as CBI will be placed in the public docket for this rulemaking.

Regulatory Flexibility Act (RFA)

The requirements of the RFA do not apply when an agency finds good cause pursuant to 5 U.S.C. 553 to adopt a rule without prior notice and comment. Because the FAA has determined that it has good cause to adopt this rule without notice and comment, RFA analysis is not required.

Costs of Compliance

The FAA estimates that this AD affects 330 helicopters of U.S. registry. The FAA estimates the following costs to comply with this AD:

ESTIMATED COSTS FOR REQUIRED ACTIONS

Labor cost	Parts cost	Cost per product	Cost on U.S. operators
2 work-hours × $85 per hour = $170	$0	$170	$56,100

The FAA estimates the following costs to do any necessary on-condition replacements that would be required based on the results of any required actions. The FAA has no way of determining the number of helicopter that might need these on-condition replacements:

ESTIMATED COSTS OF ON-CONDITION ACTIONS

Labor cost	Parts cost	Cost per product
4 work-hours × $85 per hour = $340	(*)	$340

* The FAA has received no definitive data on which to base the parts cost estimate for the on-condition replacements specified in this AD.

Authority for This Rulemaking

Title 49 of the United States Code specifies the FAA's authority to issue rules on aviation safety. Subtitle I, section 106, describes the authority of the FAA Administrator. Subtitle VII: Aviation Programs, describes in more detail the scope of the Agency's authority.

The FAA is issuing this rulemaking under the authority described in Subtitle VII, Part A, Subpart III, Section 44701: General requirements. Under that section, Congress charges the FAA with promoting safe flight of civil aircraft in air commerce by prescribing regulations for practices, methods, and procedures the Administrator finds necessary for safety in air commerce. This regulation is within the scope of that authority because it addresses an unsafe condition that is likely to exist or develop on products identified in this rulemaking action.

Regulatory Findings

The FAA determined that this AD will not have federalism implications under Executive Order 13132. This AD will not have a substantial direct effect on the States, on the relationship between the national government and the States, or on the distribution of power and responsibilities among the various levels of government.

For the reasons discussed above, I certify that this AD:

(1) Is not a ''significant regulatory action'' under Executive Order 12866, and

(2) Will not affect intrastate aviation in Alaska.

List of Subjects in 14 CFR Part 39

Air transportation, Aircraft, Aviation safety, Incorporation by reference, Safety.

Adoption of the Amendment

Accordingly, under the authority delegated to me by the Administrator, the FAA amends 14 CFR part 39 as follows:

PART 39—AIRWORTHINESS DIRECTIVES

■ 1. The authority citation for part 39 continues to read as follows:

Authority: 49 U.S.C. 106(g), 40113, 44701.

§ 39.13 [Amended]

■ 2. The FAA amends § 39.13 by adding the following new airworthiness directive:

2020–22–04 Airbus Helicopters Deutschland GmbH: Amendment 39–39–21300; Docket No. FAA–2020–0919; Project Identifier MCAI–2020–00637–R.

(a) Effective Date

This airworthiness directive (AD) becomes effective November 18, 2020.

(b) Affected ADs

None.

(c) Applicability

This AD applies to all Airbus Helicopters Deutschland GmbH Model EC135P1, EC135P2, EC135P2+, EC135P3, EC135T1, EC135T2, EC135T2+, EC135T3, and EC635T2+ helicopters, certificated in any category.

(d) Subject

Joint Aircraft System Component (JASC) Codes 6500, Tail Rotor Drive.

(e) Reason

This AD was prompted by reports of improper heat treatment of titanium (Ti)-bolts installed on the forward and aft tail rotor drive shafts, resulting in a broken Ti-bolt. The FAA is issuing this AD to address improper heat treatment of Ti-bolts on the forward and aft tail rotor drive shafts, which could lead to rupture of a Ti-bolt installed in a critical location, possibly resulting in reduced control of the helicopter.

(f) Compliance

Comply with this AD within the compliance times specified, unless already done.

(g) Requirements

Except as specified in paragraph (h) of this AD: Comply with all required actions and compliance times specified in, and in accordance with, European Union Aviation Safety Agency (EASA) AD 2020–0099, dated May 5, 2020 (EASA AD 2020–0099).

(h) Exceptions to EASA AD 2020–0099

(1) Where EASA AD 2020–0099 refers to its effective date, this AD requires using the effective date of this AD.

(2) The ''Remarks'' section of EASA AD 2020–0099 does not apply to this AD.

(3) Although the service information referenced in EASA AD 2020–0099 specifies to discard certain parts, this AD does not include that requirement.

(i) Alternative Methods of Compliance (AMOCs)

The Manager, International Validation Branch, FAA, has the authority to approve AMOCs for this AD, if requested using the procedures found in 14 CFR 39.19. In accordance with 14 CFR 39.19, send your request to your principal inspector or local Flight Standards District Office, as appropriate. If sending information directly to the International Validation Branch, send it to the attention of the person identified in paragraph (j) of this AD. Information may be emailed to: *9-AVS-AIR-730-AMOC@faa.gov.* Before using any approved AMOC, notify your appropriate principal inspector, or lacking a principal inspector, the manager of the local flight standards district office/certificate holding district office.

(j) Related Information

For more information about this AD, contact Kathleen Arrigotti, Aviation Safety Engineer, Large Aircraft Section, International Validation Branch, FAA, 2200 South 216th St., Des Moines, WA 98198; phone and fax: 206–231–3218; email: *kathleen.arrigotti@faa.gov.*

(k) Material Incorporated by Reference

(1) The Director of the Federal Register approved the incorporation by reference (IBR) of the service information listed in this paragraph under 5 U.S.C. 552(a) and 1 CFR part 51.

(2) You must use this service information as applicable to do the actions required by this AD, unless this AD specifies otherwise.

(i) European Union Aviation Safety Agency (EASA) AD 2020–0099, dated May 5, 2020.

(ii) [Reserved]

(3) For EASA AD 2020–0099, contact the EASA, Konrad-Adenauer-Ufer 3, 50668 Cologne, Germany; phone: +49 221 8999 1000; email: *ADs@easa.europa.eu;* internet: *www.easa.europa.eu.* You may find this EASA AD on the EASA website at *https://ad.easa.europa.eu.*

(4) You may view this material at the FAA, Office of the Regional Counsel, Southwest Region, 10101 Hillwood Pkwy., Room 6N–321, Fort Worth, TX. For information on the availability of this material at the FAA, call 206–231–3195. This material may be found in the AD docket on the internet at *https://www.regulations.gov* by searching for and locating Docket No. FAA–2020–0919.

(5) You may view this material that is incorporated by reference at the National Archives and Records Administration (NARA). For information on the availability of this material at NARA, email *fedreg.legal@nara.gov,* or go to: *https://www.archives.gov/federal-register/cfr/ibr-locations.html.*

Issued on October 13, 2020.

Lance T. Gant,

Director, Compliance & Airworthiness Division, Aircraft Certification Service.

[FR Doc. 2020–24263 Filed 11–2–20; 8:45 am]

BILLING CODE 4910–13–P

DEPARTMENT OF TRANSPORTATION

Federal Aviation Administration

14 CFR Part 39

[Docket No. FAA–2020–0473; Project Identifier 2018–CE–058–AD; Amendment 39–21308; AD 2020–22–12]

RIN 2120–AA64

Airworthiness Directives; Polskie Zaklady Lotnicze Sp. z o.o Airplanes

AGENCY: Federal Aviation Administration (FAA), DOT.

ACTION: Final rule.

SUMMARY: The FAA is adopting a new airworthiness directive (AD) for certain Polskie Zaklady Lotnicze Sp. z o.o. Model PZL M28 05 airplanes. This AD results from mandatory continuing airworthiness information (MCAI) originated by an aviation authority of another country to identify and correct an unsafe condition on an aviation product. The MCAI describes the unsafe condition as defective thermo-shrinkable tubes installed on the electrical harnesses located in the fuel tanks. This AD requires a one-time inspection of the electrical harnesses located in the fuel tanks and, depending on findings, replacement of the affected harness. The FAA is issuing this AD to address the unsafe condition on these products.

DATES: This AD is effective December 8, 2020.

The Director of the Federal Register approved the incorporation by reference of a certain publication listed in this AD as of December 8, 2020.

ADDRESSES: For service information identified in this final rule, contact Polskie Zaklady Lotnicze Sp. z o.o., Wojska Polskiego 3, 39–300 Mielec, Poland, telephone: +48 17 743 1901, email: *pzl.lm@lmco.com,* internet: *http://www.pzlmielec.pl/.* You may view this service information at the FAA, Airworthiness Products Section, Operational Safety Branch, 901 Locust, Kansas City, Missouri 64106. For information on the availability of this material at the FAA, call (816) 329–4148. It is also available on the internet at *https://www.regulations.gov* by searching for and locating Docket No. FAA–2020–0473.

Examining the AD Docket

You may examine the AD docket on the internet at *https://www.regulations.gov* by searching for and locating Docket No. FAA–2020–0473; or in person at Docket Operations between 9 a.m. and 5 p.m., Monday through Friday, except Federal holidays. The AD docket contains this final rule, the MCAI, any comments received, and other information. The address for Docket Operations is U.S. Department of Transportation, Docket Operations, M–30, West Building Ground Floor, Room W12–140, 1200 New Jersey Avenue SE, Washington, DC 20590.

FOR FURTHER INFORMATION CONTACT:

Doug Rudolph, Aerospace Engineer, FAA, General Aviation & Rotorcraft Section, International Validation Branch, 901 Locust, Room 301, Kansas City, Missouri 64106; telephone: (816) 329–4059; fax: (816) 329–4090; email: *doug.rudolph@faa.gov.*

SUPPLEMENTARY INFORMATION:

Discussion

The FAA issued a notice of proposed rulemaking (NPRM) to amend 14 CFR part 39 by adding an AD that would apply to certain serial-numbered Polskie Zaklady Lotnicze Sp. z o.o. Model PZL M28 05 airplanes. The NPRM published in the **Federal Register** on May 14, 2020 (85 FR 28893). The NPRM proposed to correct an unsafe condition for the specified products and was based on MCAI originated by the European Union Aviation Safety Agency (EASA), which is the Technical Agent for the Member States of the European Union. EASA issued AD No. 2018–0242, dated October 8, 2018 (referred to after this as ''the MCAI''), which states:

> During accomplishment of maintenance on an M28 05 military version airplane, torn pieces of thermo-shrinkable tubes were found in the header section of the main fuel tank. These tubes are installed on electrical harnesses located in the fuel tanks and serve as marking and protection devices against mechanical damage during manufacturing and servicing. Pieces of these tubes may travel with the fuel flow and may block the jet pump or reduce its performance, particularly in the centre-wing fuel tank, in which the jet pump is the only way of further transfer of fuel to the engine. Subsequent investigation determined that degradation of the tube material was caused by a manufacturing deficiency, leading to insufficient material resistance against mechanical damage when a tube is located in a fuel.
>
> This condition, if not detected and corrected, could lead to reduced fuel supply to the engines, inability to use all the fuel in fuel tanks and reduced available engine power, resulting in reduced aeroplane performance.
>
> To address this potentially unsafe condition, PZL identified the batch of aeroplanes that are potentially equipped with thermo-shrinkable tubes having this manufacturing defect, and issued the [service bulletin] SB providing inspection and replacement instructions.
>
> For the reasons described above, this [EASA] AD requires a one-time inspection of the electrical harnesses located in the fuel tanks and, depending on findings, replacement of the affected harness.

Polskie Zaklady Lotnicze Sp. z o.o. informed the FAA the potential for damage to the thermo-shrinkable tubes does not progress with time. Therefore, the FAA determined repetitive inspections are not required. You may examine the MCAI on the internet at *https://www.regulations.gov* by searching for and locating Docket No. FAA–2020–0473.

Comments

The FAA gave the public the opportunity to participate in developing this final rule. The following presents the comments received on the NPRM and the FAA's response to each comment.

Support for the NPRM

An individual commenter supported the NPRM.

Request To Change the Cost of Compliance

Another individual commenter requested the FAA increase the estimated number of labor hours in the cost of compliance. The commenter stated the number of hours should be increased from 3 to at least 44 to 48, based on the time and personnel needed to open the center wing panels, properly shore the engines, open the tank covers, perform the inspection, and complete the close up. The commenter further stated that this would not include costs for any de-fueling, de-puddling, re-fueling, or leak checks that may need to be done.

The FAA disagrees. The cost analysis in AD rulemaking actions typically includes only the costs associated with complying with the AD. In the NPRM, the FAA estimated 3 work hours to perform the inspection and 60 work hours, if necessary, to replace the harness, based on information from the design approval holder. The compliance time for this AD allows the operator do this inspection at the same time as other maintenance when the airplane has been prepared for other tasks. No changes were made to the proposed AD based on this comment.

Conclusion

The FAA reviewed the relevant data, considered the comments received, and determined that air safety and the public interest require adopting this final rule as proposed.

Related Service Information Under 1 CFR Part 51

The FAA reviewed Polskie Zaklady Lotnicze Sp. z o.o. Service Bulletin No. E/12.141/2018, dated May 15, 2018. The service information contains procedures for inspecting the thermo-shrinkable tubes on the electrical harnesses in the center and outer wing fuel tanks for damage and replacing any electrical harness with damaged thermo-shrinkable tubes. This service information is reasonably available because the interested parties have access to it through their normal course of business or by the means identified in the **ADDRESSES** section.

Costs of Compliance

The FAA estimates that this AD will affect 15 products of U.S. registry. The FAA also estimates that it will take about 3 work-hours per product to comply with the inspection requirement of this AD. The average labor rate is $85 per work-hour.

Based on these figures, the FAA estimates the cost of the AD on U.S. operators to be $3,825, or $255 per product.

In addition, the FAA estimates that any necessary follow-on replacement action will take about 60 work-hours and require parts costing $5,000, for a cost of $10,100 per electrical harness. The FAA has no way of determining the number of airplanes that may need these actions.

Authority for This Rulemaking

Title 49 of the United States Code specifies the FAA's authority to issue rules on aviation safety. Subtitle I, section 106, describes the authority of the FAA Administrator. Subtitle VII: Aviation Programs, describes in more detail the scope of the Agency's authority.

The FAA is issuing this rulemaking under the authority described in Subtitle VII, Part A, Subpart III, Section 44701: General requirements. Under that section, Congress charges the FAA with promoting safe flight of civil aircraft in air commerce by prescribing regulations for practices, methods, and procedures the Administrator finds necessary for safety in air commerce. This regulation is within the scope of that authority because it addresses an unsafe condition that is likely to exist or

develop on products identified in this rulemaking action.

Regulatory Findings

This AD will not have federalism implications under Executive Order 13132. This AD will not have a substantial direct effect on the States, on the relationship between the national government and the States, or on the distribution of power and responsibilities among the various levels of government.

For the reasons discussed above, I certify this AD:

(1) Is not a ''significant regulatory action'' under Executive Order 12866,

(2) Will not affect intrastate aviation in Alaska, and

(3) Will not have a significant economic impact, positive or negative, on a substantial number of small entities under the criteria of the Regulatory Flexibility Act.

List of Subjects in 14 CFR Part 39

Air transportation, Aircraft, Aviation safety, Incorporation by reference, Safety.

Adoption of the Amendment

Accordingly, under the authority delegated to me by the Administrator, the FAA amends 14 CFR part 39 as follows:

PART 39—AIRWORTHINESS DIRECTIVES

■ 1. The authority citation for part 39 continues to read as follows:

Authority: 49 U.S.C. 106(g), 40113, 44701.

§ 39.13 [Amended]

■ 2. The FAA amends § 39.13 by adding the following new airworthiness directive (AD):

2020–22–12 Polskie Zaklady Lotnicze Sp. z o.o: Amendment 39–21308; Docket No. FAA–2020–0473; Project Identifier 2018–CE–058–AD.

(a) Effective Date

This AD is effective December 8, 2020.

(b) Affected ADs

None.

(c) Applicability

This AD applies to Polskie Zaklady Lotnicze Sp. z o.o. Model PZL M28 05 airplanes, serial numbers AJE00301 through AJE00343, and AJE00345 through AJE00347, certificated in any category.

(d) Subject

Air Transport Association of America (ATA) Code 28: Fuel Tank.

(e) Reason

This AD was prompted by mandatory continuing airworthiness information (MCAI) originated by an aviation authority of another country to identify and correct an unsafe condition on an aviation product. The MCAI describes the unsafe condition as defective thermo-shrinkable tubes installed on the electrical harnesses located in the fuel tanks. The FAA is issuing this AD to prevent broken pieces of the thermo-shrinkable tubes from blocking the jet pump, reducing fuel supply to the engines, and resulting in the inability to use all the fuel in the fuel tanks. This condition could lead to reduced engine power and airplane performance.

(f) Actions and Compliance

Unless already done, do the following actions in paragraphs (f)(1) and (2) of this AD:

(1) Within the next 200 hours time-in-service (TIS) after the effective date of this AD or within the next 8 months after the effective date of this AD, whichever occurs first:

(i) Inspect each electrical wire harness in the center wing and the left-hand and right-hand outer wing fuel tanks for cracking, tears, and seizing of the thermo-shrinkable tubes in accordance with paragraphs II.1 through 2 a) of the Procedure for Bulletin Execution section in Polskie Zaklady Lotnicze Sp. z o.o. Service Bulletin No. E/12.141/2018, dated May 15, 2018.

(ii) If there is a tear or any cracking in or any seizing of an electrical wire harness thermo-shrinkable tube, before further flight, replace the harness in accordance with section II. a) Replacement of harness KL8 (KP), II. b) Replacement of Harness KL9 (KP9), or II. c) Replacement of harness KL10 (KP10), as applicable, of the Procedure for Bulletin Execution in Polskie Zaklady Lotnicze Sp. z o.o. Service Bulletin No. E/12.141/2018, dated May 15, 2018.

(2) As of the effective date of this AD, do not install any electrical wire harness part number 28.14.7205.073.000, 28.14.7205.074.000, 28.14.7205.075.000, 28.14.7205.076.000, 28.14.7205.077.000, or 28.14.7205.078.000, that has more than zero hours TIS on any airplane, unless it has passed the inspection required by paragraph (f)(1)(i) of this AD.

(g) Alternative Methods of Compliance (AMOCs)

The Manager, International Validation Branch, FAA, has the authority to approve AMOCs for this AD, if requested using the procedures found in 14 CFR 39.19. Send information to Doug Rudolph, Aerospace Engineer, FAA, General Aviation & Rotorcraft Section, International Validation Branch, 901 Locust, Room 301, Kansas City, Missouri 64106; telephone: (816) 329–4059; fax: (816) 329–4090; email: *doug.rudolph@faa.gov.* Before using any approved AMOC on any airplane to which the AMOC applies, notify your appropriate principal inspector (PI) in the FAA Flight Standards District Office (FSDO), or lacking a PI, your local FSDO.

(h) Related Information

Refer to European Union Aviation Safety Agency (EASA) AD No. 2018–0242, dated October 8, 2018, for more information. You may examine the EASA AD in the AD docket on the internet at *https://www.regulations.gov* by searching for and locating Docket No. FAA–2020–0473.

(i) Material Incorporated by Reference

(1) The Director of the Federal Register approved the incorporation by reference (IBR) of the service information listed in this paragraph under 5 U.S.C. 552(a) and 1 CFR part 51.

(2) You must use this service information as applicable to do the actions required by this AD, unless the AD specifies otherwise.

(i) Polskie Zaklady Lotnicze Sp. z o.o. Service Bulletin No. E/12.141/2018, dated May 15, 2018.

(ii) [Reserved]

(3) For Polskie Zaklady Lotnieze Spolka zo.o service information identified in this AD, contact Polskie Zaklady Lotnicze Sp. z o.o., Wojska Polskiego 3, 39–300 Mielec, Poland, telephone: +48 17 743 1901, email: *pzl.lm@lmco.com,* internet: *http://www.pzlmielec.pl.*

(4) You may view this service information at the FAA, Airworthiness Products Section, Operational Safety Branch, 901 Locust, Kansas City, Missouri 64106. For information on the availability of this material at the FAA, call (816) 329–4148.

(5) You may view this service information that is incorporated by reference at the National Archives and Records Administration (NARA). For information on the availability of this material at NARA, email: *fedreg.legal@nara.gov,* or go to: *https://www.archives.gov/federal-register/cfr/ibr-locations.html.*

Issued on October 19, 2020.

Lance T. Gant,

Director, Compliance & Airworthiness Division, Aircraft Certification Service.

[FR Doc. 2020–24243 Filed 11–2–20; 8:45 am]

BILLING CODE 4910–13–P

COMMODITY FUTURES TRADING COMMISSION

17 CFR Part 23

RIN 3038–AE84

Cross-Border Application of the Registration Thresholds and Certain Requirements Applicable to Swap Dealers and Major Swap Participants; Correction

AGENCY: Commodity Futures Trading Commission.

ACTION: Final rule; correction.

SUMMARY: The Commodity Futures Trading Commission (Commission) is correcting a final rule published in the **Federal Register** on September 14, 2020. The document addressed the cross-border application of certain swap provisions of the Commodity Exchange Act (''CEA'' or ''Act''), as added by Title VII of the Dodd-Frank Wall Street Reform and Consumer Protection Act (''Dodd-Frank Act'').

DATES: Effective on November 13, 2020.

FOR FURTHER INFORMATION CONTACT: Joshua Sterling, Director, (202) 418–6056, *jsterling@cftc.gov;* Frank Fisanich, Chief Counsel, (202) 418–5949, *ffisanich@cftc.gov;* Amanda Olear, Deputy Director, (202) 418–5283, *aolear@cftc.gov;* Rajal Patel, Associate Director, (202) 418–5261, *rpatel@cftc.gov;* Lauren Bennett, Special Counsel, (202) 418–5290, *lbennett@cftc.gov;* Jacob Chachkin, Special Counsel, (202) 418–5496, *jchachkin@cftc.gov;* or Owen Kopon, Special Counsel, *okopon@cftc.gov,* (202) 418–5360, Division of Swap Dealer and Intermediary Oversight (''DSIO''), Commodity Futures Trading Commission, Three Lafayette Centre, 1155 21st Street NW, Washington, DC 20581.

SUPPLEMENTARY INFORMATION: In FR Doc. 2020–16489 appearing on page 56924 in the **Federal Register** of Monday, September 14, 2020, the following correction is made:

§ 23.23 [Corrected]

■ 1. On page 57001, in the first column, in § 23.23, in paragraph (h)(3)(i), ''This section shall be effective on the date that is 60 days following its publication in the **Federal Register**.'' is corrected to read ''This section shall be effective on November 13, 2020.''

Dated: October 15, 2020.

Robert Sidman,

Deputy Secretary of the Commission.

[FR Doc. 2020–23167 Filed 11–2–20; 8:45 am]

BILLING CODE 6351–01–P

SECURITIES AND EXCHANGE COMMISSION

17 CFR Part 232

[Release Nos. 33–10845; 34–89920; 39–2533; IC–34015]

Adoption of Updated EDGAR Filer Manual

AGENCY: Securities and Exchange Commission.

ACTION: Final rule.

SUMMARY: The Securities and Exchange Commission (the ''Commission'') is adopting revisions to Volume II of the Electronic Data Gathering, Analysis, and Retrieval System (''EDGAR'') Filer Manual (''EDGAR Filer Manual'' or ''Filer Manual'') and related rules. The EDGAR system was upgraded on September 21, 2020.

DATES: Effective November 3, 2020. The incorporation by reference of the EDGAR Filer Manual is approved by the Director of the **Federal Register** as of November 3, 2020.

FOR FURTHER INFORMATION CONTACT: For questions regarding updates to the Forms N–CEN and N–CEN/A submission types for exchange-traded funds (''ETFs'') and the submission form types and exhibits for variable contracts, please contact Heather Fernandez in the Division of Investment Management at (202) 551–6708. For questions concerning the redlining for Inline eXtensible Business Reporting Language (''iXBRL'') and the removal of 2018 International Financial Reporting Standards (IFRS–2018) and 2018 Document and Entity Information (DEI–2018) taxonomies and removal of linkbases of 2018 US Mutual Fund Risk/Return (RR–2018) taxonomy, please contact the Office of Structured Disclosure in the Division of Economic and Risk Analysis at (202) 551–5494.

SUPPLEMENTARY INFORMATION: We are adopting an updated EDGAR Filer Manual Volume II: ''EDGAR Filing'' (Version 54) (September 2020). The updated Filer Manual is incorporated by reference into the Code of Federal Regulations.

The Filer Manual contains all the technical specifications needed for filers to make submissions through the EDGAR system.[1] Filers must comply with the applicable provisions of the Filer Manual in order to assure the timely acceptance and processing of filings made in electronic format.[2]

The EDGAR System was updated in Release 20.3 and corresponding amendments to the Filer Manual are being made to reflect the changes described below.

On September 25, 2019, the Commission adopted 17 CFR 6c–11 (''rule 6c–11'') under the Investment Company Act of 1940 to permit ETFs that satisfy certain conditions to operate without the expense and delay of obtaining an exemptive order. The Commission also adopted certain related amendments to Form N–CEN.[3] EDGAR Release 20.3 updates Forms N–CEN and N–CEN/A submission types to collect specific information on which ETFs are relying on rule 6c–11 and the instruction that contains the definition of ''authorized participant'' to conform the definition with rule 6c–11. The EDGAR Filer Manual has been revised to provide relevant instructions related to this modification for filers to complete Forms N–CEN and N–CEN/A submission types. See Chapter 8 (Preparing and Transmitting Online Submissions) of the EDGAR Filer Manual, Volume II: ''EDGAR Filing.''

On March 11, 2020, the Commission adopted rule and form amendments intended to help investors make informed investment decisions regarding variable annuity and variable life insurance contracts.[4] EDGAR Release 20.3 adds the following new submission form types accessible through EDGARLink Online: 497VPI, 497VPU, N–VP, N–VP/A, N–VPFS, and N–VPFS/A. See Chapter 3 (Index to Forms) and Appendix C (EDGAR Submission Types) of the EDGAR Filer Manual, Volume II: ''EDGAR Filing.''

The EDGAR system will no longer accept the following submission form types after September 21, 2020, due to the Commission's rescission of these form types: N–1, N–1/A, N–27E–1, N–27E–1/A, N–27F–1, and N–27F–1/A. New exhibits for Forms N–3, N–4 and N–6 also are available on EDGARLink Online and filers have the option to attach these new exhibits in official HTML or ASCII format (and unofficially in PDF format). The EDGAR Filer Manual includes information related to this modification for filers to complete the relevant submission types and to include references to the new exhibit types. See Appendix E (Automated Conformance Rules for EDGAR Data Fields) of the EDGAR Filer Manual, Volume II: ''EDGAR Filing.''

EDGAR Release 20.3 allows filers to mark changed material by redlining changed content in Inline XBRL submissions. Accordingly, the following submission form types permit redlining in Inline XBRL format: N–1A, N–1A/A, 485APOS, 497, 485BPOS, 10–Q, 10–Q/A, 10–QT, 10–QT/A, S–1, S–1/A, S–3, S–3/A, S–4, S–4/A, S–11, S–11/A, S–11MEF, S–1MEF, S–3D, S–3DPOS, S–3MEF, S–4 POS, S–4EF, S–4MEF, 10–K, 10–K/A, 10–KT, 10–KT/A, 10–12B, 10–12B/A, 10–12G, 10–12G/A, POS AM, POS EX, S–3ASR, 20–F, 20–F/A, 40–F, 40–F/A, 8–K, 8–K/A, F–1, F–1/A, F–3, F–3/A, F–3ASR, F–3D, F–3DPOS, F–3MEF, F–4, F–4/A, F–4EF, F–4POS, F–10EF, F–10POS, 6–K, 6–K/A, 8–K12B, 8–K12B/A, 8–K12G3, 8–K12G3/A, 8–K15D5, 8–K15D5/A, SP 15D2, and SP 15D2/A. See Chapter 5 (Constructing

[1] We originally adopted the Filer Manual on April 1, 1993, with an effective date of April 26, 1993. Release No. 33–6986 (Apr. 1, 1993) [58 FR 18638]. We implemented the most recent update to the Filer Manual on January 27, 2020. *See* Release No. 33–10749 (Jan. 27, 2020) [85 FR 9365].

[2] *See* Rule 301 of Regulation S–T (17 CFR 232.301).

[3] See Exchange-Traded Funds, Release No. 33–10695 (Sep. 25, 2019) [84 FR 57162].

[4] *See* Updated Disclosure Requirements and Summary Prospectus for Variable Annuity and Variable Life Insurance Contracts, Release No. 33–10765 (Mar. 11, 2020) [85 FR 25964].

Attached Documents and Document Types) of the EDGAR Filer Manual, Volume II: ''EDGAR Filing.''

In EDGAR Release 20.3, the EDGAR system disallows the IFRS–2018 taxonomy and DEI–2018 taxonomy versions and linkbases of RR–2018 taxonomy since two versions of both IFRS and DEI taxonomies are usually maintained, which are currently the 2020 and 2019 versions. The linkbases of the RR–2018 taxonomy depend on the DEI–2018 taxonomy, which is being removed. Please see *https://www.sec.gov/info/edgar/edgartaxonomies.shtml* for the complete list of supported standard taxonomies.

Along with the adoption of the Filer Manual, we are amending 17 CFR 232.301 to provide for the incorporation by reference into the Code of Federal Regulations of the current revisions. This incorporation by reference was approved by the Director of the Federal Register in accordance with 5 U.S.C. 552(a) and 1 CFR part 51.

The updated EDGAR Filer Manual is available for website viewing and printing; the address for the Filer Manual is *https://www.sec.gov/info/edgar/edmanuals.htm.* You may also obtain paper copies of the EDGAR Filer Manual from the following address: Public Reference Room, U.S. Securities and Exchange Commission, 100 F Street NE, Washington, DC 20549, on official business days between the hours of 10 a.m. and 3 p.m.

Because the Filer Manual and the corresponding rule and form amendments relate solely to agency procedures or practice, publication for notice and comment is not required under the Administrative Procedure Act (''APA'').[5] It follows that the requirements of the Regulatory Flexibility Act[6] do not apply.

The effective date for the updated Filer Manual and the related rule and form amendments is November 3, 2020. In accord with the APA,[7] we find that there is good cause to establish an effective date less than 30 days after publication of these rules. The Commission believes that establishing an effective date less than 30 days after publication of these rules is necessary to coordinate the effectiveness of the updated Filer Manual with the related system upgrades.

STATUTORY BASIS

We are adopting the amendments to Regulation S–T under the authority in Sections 6, 7, 8, 10, and 19(a) of the Securities Act of 1933,[8] Sections 3, 12, 13, 14, 15, 15B, 23, and 35A of the Securities Exchange Act of 1934,[9] Section 319 of the Trust Indenture Act of 1939,[10] and Sections 8, 30, 31, and 38 of the Investment Company Act of 1940.[11]

List of Subjects in 17 CFR Part 232

Incorporation by reference, Reporting and recordkeeping requirements, Securities.

TEXT OF THE AMENDMENTS

In accordance with the foregoing, title 17, chapter II of the Code of Federal Regulations is amended as follows:

PART 232 REGULATION S–T—GENERAL RULES AND REGULATIONS FOR ELECTRONIC FILINGS

■ 1. The authority citation for part 232 continues to read in part as follows:

Authority: 15 U.S.C. 77c, 77f, 77g, 77h, 77j, 77s(a), 77z–3, 77sss(a), 78c(b), 78*l,* 78m, 78n, 78*o*(d), 78w(a), 78*ll,* 80a–6(c), 80a–8, 80a–29, 80a–30, 80a–37, 7201 *et seq.;* and 18 U.S.C. 1350, unless otherwise noted.

* * * * *

■ 2. Section 232.301 is revised to read as follows:

§ 232.301 EDGAR Filer Manual.

Filers must prepare electronic filings in the manner prescribed by the EDGAR Filer Manual, promulgated by the Commission, which sets forth the technical formatting requirements for electronic submissions. The requirements for becoming an EDGAR Filer and updating company data are set forth in the updated EDGAR Filer Manual, Volume I: ''General Information,'' Version 35 (January 2020). The requirements for filing on EDGAR are set forth in the updated EDGAR Filer Manual, Volume II: ''EDGAR Filing,'' Version 54 (September 2020). All of these provisions have been incorporated by reference into the Code of Federal Regulations, which action was approved by the Director of the Federal Register in accordance with 5 U.S.C. 552(a) and 1 CFR part 51. You must comply with these requirements in order for documents to be timely received and accepted. The EDGAR Filer Manual is available for website viewing and printing; the address for the Filer Manual is *https://www.sec.gov/info/edgar/edmanuals.htm.* You can obtain paper copies of the EDGAR Filer Manual at the following address: Public Reference Room, U.S. Securities and Exchange Commission, 100 F Street NE, Washington, DC 20549, on official business days between the hours of 10 a.m. and 3 p.m. You can also inspect the document at the National Archives and Records Administration (''NARA''). For information on the availability of this material at NARA, email *fedreg.legal@nara.gov,* or go to: *https://www.archives.gov/federal-register/cfr/ibr-locations.html.*

By the Commission.

Dated: September 18, 2020.

Vanessa A. Countryman,

Secretary.

[FR Doc. 2020–22391 Filed 11–2–20; 8:45 am]

BILLING CODE 8011–01–P

[5] 5 U.S.C. 553(b)(A).

[6] 5 U.S.C. 601 through 612.

[7] 5 U.S.C. 553(d) (3).

[8] 15 U.S.C. 77f, 77g, 77h, 77j, and 77s (a).

[9] 15 U.S.C. 78c, 78*l,* 78m, 78n, 78*o,* 78o–4, 78w, and 78*ll.*

[10] 15 U.S.C. 77sss.

[11] 15 U.S.C. 80a–8, 80a–29, 80a–30, and 80a–37.

DEPARTMENT OF THE TREASURY

Internal Revenue Service

26 CFR Part 1

[TD 9901]

RIN 1545–BO55

Deduction for Foreign-Derived Intangible Income and Global Intangible Low-Taxed Income; Correction

AGENCY: Internal Revenue Service (IRS), Treasury.

ACTION: Final regulations; correction.

SUMMARY: This document contains corrections to the final regulations (Treasury Decision 9901) that were published in the **Federal Register** on Wednesday July 15, 2020. Treasury Decision 9901 contained final regulations that provide guidance regarding the deduction for foreign-derived intangible income (FDII) and global intangible low-taxed income (GILTI) and for coordinating the deduction for FDII and GILTI with other provisions in the Internal Revenue Code.

DATES: These corrections are effective on November 2, 2020. For dates of applicability, see §§ 1.250–1(b) and 1.861–8(h).

FOR FURTHER INFORMATION CONTACT: Brad McCormack at (202) 317–6911 and Lorraine Rodriguez at (202) 317–6726 (not toll-free numbers).

SUPPLEMENTARY INFORMATION:

Background

The final regulations (TD 9901) that are the subject of this correction are under sections 250 and 861 of the Internal Revenue Code.

Need for Correction

As published on July 15, 2020 (85 FR 43042) the final regulations (TD 9901) contain errors that need to be corrected.

Correction of Publication

Accordingly, the final regulations (TD 9901) that were the subject of FR Doc. 2020–14649, published at 85 FR 43042 (July 15, 2020), are corrected as follows:

1. On page 43044, third column, the third through the fifth, and the ninth line from the top of the last partial paragraph, and page 43045, first column, the first line from the top of the first partial paragraph, the language ''taken into account in determining the taxable income limitation in section 250(a)(2),'' is corrected to read ''taken into account for coordinating taxable income limitations (including the taxable income limitation in section 250(a)(2)),'' and the language ''if the method is applied consistently for all taxable'' is corrected to read '' if the same method is applied consistently for all relevant Code sections and for all taxable''.

2. On page 43071, first column, the third and eighth and ninth line from the top of the last partial paragraph from the bottom, the text ''years beginning before January 1, 2021,'' is corrected to read ''years beginning on or after January 1, 2018, and before January 1, 2021,'' and the text ''provisions in § 1.250(b)–4(d)(3) or § 1.250(b)–5(e)(4))'' is corrected to read ''provisions in § 1.250(b)–4(d)(3) or § 1.250(b)–5(e)(4)), but once applied, taxpayers must apply the final regulations for all subsequent taxable years beginning before January 1, 2021''.

3. On page 43071, second column, amend the first partial paragraph by adding at the end of the paragraph the text: ''The final regulations also make conforming amendments to § 1.861–8 in relation to the finalization of the regulations under section 250. Consistent with the general applicability date for §§ 1.250(a)–1 through 1.250(b)–6, these amendments apply to taxable years beginning on or after January 1, 2021. For taxable years beginning before January 1, 2021, taxpayers may allocate and apportion deductions for purposes of determining deduction eligible income and foreign-derived deduction eligible income by allocating and apportioning deductions in accordance with the principles of §§ 1.861–8 through 1.861–17. No inference is intended as to whether other approaches for allocating and apportioning deductions for purposes of section 250(b) may be considered to result in properly allocable deductions.''

Crystal Pemberton,

Senior Federal Register Liaison, Publications and Regulations Branch, Legal Processing Division, Associate Chief Counsel, (Procedure and Administration).

[FR Doc. 2020–22996 Filed 11–2–20; 8:45 am]

BILLING CODE 4830–01–P

DEPARTMENT OF COMMERCE

Patent and Trademark Office

37 CFR Part 6

[Docket No. PTO–T–2020–0037]

RIN 0651–AD49

International Trademark Classification Changes

AGENCY: United States Patent and Trademark Office, Department of Commerce.

ACTION: Final rule.

SUMMARY: The United States Patent and Trademark Office (USPTO) issues this final rule to incorporate classification changes adopted by the Nice Agreement Concerning the International Classification of Goods and Services for the Purposes of the Registration of Marks (Nice Agreement). These changes are listed in the International Classification of Goods and Services for the Purposes of the Registration of Marks (Nice Classification), which is published by the World Intellectual Property Organization (WIPO), and will become effective on January 1, 2021.

DATES: This rule is effective on January 1, 2021.

FOR FURTHER INFORMATION CONTACT: Catherine Cain, Office of the Deputy Commissioner for Trademark Examination Policy, at 571–272–8946, or by email at *TMFRNotices@uspto.gov.*

SUPPLEMENTARY INFORMATION:

Purpose: As noted above, this final rule incorporates classification changes adopted by the Nice Agreement that will become effective on January 1, 2021. Specifically, this rule adds new services to or deletes existing services from two class headings to further define the types of services appropriate to the class.

Summary of Major Provisions: The USPTO is revising § 6.1 of 37 CFR part 6 to incorporate classification changes and modifications, as listed in the Nice Classification (11th ed., ver. 2021), published by WIPO, which will become effective on January 1, 2021.

The Nice Agreement is a multilateral treaty, administered by WIPO, that establishes the international classification of goods and services for the purposes of registering trademarks and service marks. As of September 1, 1973, this international classification system is the controlling system used by the United States, and it applies, for all statutory purposes, to all applications filed on or after September 1, 1973, and their resulting registrations. *See* 37 CFR 2.85(a). Every signatory to the Nice Agreement must utilize the international classification system.

Each state party to the Nice Agreement is represented in the Committee of Experts of the Nice Union (Committee of Experts), which meets annually to vote on proposed changes to the Nice Classification. Any state that is a party to the Nice Agreement may submit proposals for consideration by the other members of the Committee of Experts in accordance with agreed-upon rules of procedure. Proposals are currently submitted on an annual basis to an electronic forum on the WIPO website, commented upon, modified, and compiled by WIPO for further discussion and voting at the annual Committee of Experts meeting.

In 2013, the Committee of Experts began annual revisions to the Nice Classification. The annual revisions, which are published electronically and enter into force on January 1 each year, are referred to as versions and identified by edition number and the year of the effective date (*e.g.,* ''Nice Classification, 10th edition, version 2013'' or ''NCL 10–2013''). Each annual version includes all changes adopted by the Committee of Experts since the adoption of the previous version. The changes consist of: (1) The addition of new goods and services to, and deletion of goods and services from, the Alphabetical List, and (2) any modifications to the wording in the Alphabetical List, the class headings, and the explanatory notes that do not involve the transfer of goods or services from one class to another. New editions of the Nice Classification continue to be published electronically every five years and include all changes adopted since the previous annual version, as well as goods or services transferred from one class to another or new classes that have been created since the previous edition.

Due to the worldwide impact of COVID–19, the International Bureau (IB) at WIPO announced on March 12, 2020, that the 30th session of the Committee of Experts, originally scheduled to be held in Geneva, Switzerland, from April 27, 2020, to May 1, 2020, would not be convened in person as planned. In order to maintain the revision cycle of the Nice Classification as much as possible,

the IB issued circular NCL 164 to Member States of the Nice Union to collect their opinion about the possibility of voting through the Nice Electronic Forum on proposals that had been submitted for the 30th session (e-voting). All proposals that received unanimous support through e-voting would be regarded as adopted for inclusion into the next version of the Nice Classification (NCL 11–2021), which will enter into force on January 1, 2021. All non-adopted proposals would be carried forward to the next session for further discussion. The IB's suggestion was supported by 29 of the 32 Member States of the Nice Union who submitted comments to the proposal.

The annual revisions contained in this final rule consist of modifications to the class headings that were incorporated into the Nice Agreement through e-voting during the 30th Session of the Committee of Experts, from April 1, 2020, through May 1, 2020. Under the Nice Classification, there are 34 classes of goods and 11 classes of services, each with a class heading. Class headings generally indicate the fields to which goods and services belong. Specifically, this rule adds new services to or deletes existing services from two class headings, as set forth in the discussion of regulatory changes below. The changes to the class headings further define the types of services appropriate to the class. As a signatory to the Nice Agreement, the United States adopts these revisions pursuant to Article 1.

Discussion of Regulatory Changes

The USPTO is revising § 6.1 as follows:

In Class 35, a comma is added after ''management'' and the wording ''organization and administration'' is added immediately thereafter. The wording ''business administration'' and the semicolon thereafter are deleted.

In Class 36, the wording ''Financial, monetary, and banking services;'' is added, and immediately thereafter, ''Insurance'' is amended to ''insurance services.'' The wording ''financial affairs'' and ''monetary affairs'' and the semicolons thereafter are deleted.

Rulemaking Requirements

A. Administrative Procedure Act: The changes in this rulemaking involve rules of agency practice and procedure, and/or interpretive rules. *See Perez* v. *Mortg. Bankers Ass'n,* 575 U.S. 92, 97 (2015) (Interpretive rules ''advise the public of the agency's construction of the statutes and rules which it administers.'' (citation and internal quotation marks omitted)); *Nat'l Org. of Veterans' Advocates* v. *Sec'y of Veterans Affairs,* 260 F.3d 1365, 1375 (Fed. Cir. 2001) (Rule that clarifies interpretation of a statute is interpretive.); *Bachow Commc'ns Inc.* v. *FCC,* 237 F.3d 683, 690 (D.C. Cir. 2001) (Rules governing an application process are procedural under the Administrative Procedure Act.); *Inova Alexandria Hosp.* v. *Shalala,* 244 F.3d 342, 350 (4th Cir. 2001) (Rules for handling appeals were procedural where they did not change the substantive standard for reviewing claims.).

Accordingly, prior notice and opportunity for public comment for the changes in this rulemaking are not required pursuant to 5 U.S.C. 553(b) or (c), or any other law. *See Perez,* 575 U.S. at 101 (Notice and comment procedures are required neither when an agency ''issue[s] an initial interpretive rule'' nor ''when it amends or repeals that interpretive rule.''); *Cooper Techs. Co.* v. *Dudas,* 536 F.3d 1330, 1336–37 (Fed. Cir. 2008) (stating that 5 U.S.C. 553, and thus 35 U.S.C. 2(b)(2)(B), does not require notice and comment rulemaking for ''interpretative rules, general statements of policy, or rules of agency organization, procedure, or practice'' (quoting 5 U.S.C. 553(b)(A))).

B. Regulatory Flexibility Act: As prior notice and an opportunity for public comment are not required pursuant to 5 U.S.C. 553 or any other law, neither a Regulatory Flexibility Act analysis nor a certification under the Regulatory Flexibility Act (5 U.S.C. 601 *et seq.*) is required. *See* 5 U.S.C. 603.

C. Executive Order 12866 (Regulatory Planning and Review): This rulemaking has been determined to be not significant for purposes of Executive Order 12866 (Sept. 30, 1993).

D. Executive Order 13563 (Improving Regulation and Regulatory Review): The USPTO has complied with Executive Order 13563 (Jan. 18, 2011). Specifically, the USPTO has, to the extent feasible and applicable: (1) Made a reasoned determination that the benefits justify the costs of the rule; (2) tailored the rule to impose the least burden on society consistent with obtaining the regulatory objectives; (3) selected a regulatory approach that maximizes net benefits; (4) specified performance objectives; (5) identified and assessed available alternatives; (6) involved the public in an open exchange of information and perspectives among experts in relevant disciplines, affected stakeholders in the private sector, and the public as a whole, and provided online access to the rulemaking docket; (7) attempted to promote coordination, simplification, and harmonization across government agencies and identified goals designed to promote innovation; (8) considered approaches that reduce burdens and maintain flexibility and freedom of choice for the public; and (9) ensured the objectivity of scientific and technological information and processes.

E. Executive Order 13771 (Reducing Regulation and Controlling Regulatory Costs): This rule is not an Executive Order 13771 (Jan. 30, 2017) regulatory action because this rule is not significant under Executive Order 12866 (Sept. 30, 1993).

F. Executive Order 13132 (Federalism): This rulemaking does not contain policies with federalism implications sufficient to warrant preparation of a Federalism Assessment under Executive Order 13132 (Aug. 4, 1999).

G. Executive Order 13175 (Tribal Consultation): This rulemaking will not: (1) Have substantial direct effects on one or more Indian tribes; (2) impose substantial direct compliance costs on Indian tribal governments; or (3) preempt tribal law. Therefore, a tribal summary impact statement is not required under Executive Order 13175 (Nov. 6, 2000).

H. Executive Order 13211 (Energy Effects): This rulemaking is not a significant energy action under Executive Order 13211 because this rulemaking is not likely to have a significant adverse effect on the supply, distribution, or use of energy. Therefore, a Statement of Energy Effects is not required under Executive Order 13211 (May 18, 2001).

I. Executive Order 12988 (Civil Justice Reform): This rulemaking meets applicable standards to minimize litigation, eliminate ambiguity, and reduce burden as set forth in sections 3(a) and 3(b)(2) of Executive Order 12988 (Feb. 5, 1996).

J. Executive Order 13045 (Protection of Children): This rulemaking does not concern an environmental risk to health or safety that may disproportionately affect children under Executive Order 13045 (Apr. 21, 1997).

K. Executive Order 12630 (Taking of Private Property): This rulemaking will not affect a taking of private property or otherwise have taking implications under Executive Order 12630 (Mar. 15, 1988).

L. Congressional Review Act: Under the Congressional Review Act provisions of the Small Business Regulatory Enforcement Fairness Act of 1996 (5 U.S.C. 801 *et seq.*), prior to issuing any final rule, the USPTO will submit a report containing the final rule

and other required information to the United States Senate, the United States House of Representatives, and the Comptroller General of the Government Accountability Office. The changes in this rulemaking are not expected to result in an annual effect on the economy of 100 million dollars or more, a major increase in costs or prices, or significant adverse effects on competition, employment, investment, productivity, innovation, or the ability of United States-based enterprises to compete with foreign-based enterprises in domestic and export markets. Therefore, this rulemaking is not expected to result in a ''major rule'' as defined in 5 U.S.C. 804(2).

M. Unfunded Mandates Reform Act of 1995: The changes set forth in this rulemaking do not involve a Federal intergovernmental mandate that will result in the expenditure by State, local, and tribal governments, in the aggregate, of 100 million dollars (as adjusted) or more in any one year, or a Federal private sector mandate that will result in the expenditure by the private sector of 100 million dollars (as adjusted) or more in any one year, and will not significantly or uniquely affect small governments. Therefore, no actions are necessary under the provisions of the Unfunded Mandates Reform Act of 1995. *See* 2 U.S.C. 1501 *et seq.*

N. National Environmental Policy Act of 1969: This rulemaking will not have any effect on the quality of the environment and is thus categorically excluded from review under the National Environmental Policy Act of 1969. *See* 42 U.S.C. 4321 *et seq.*

O. National Technology Transfer and Advancement Act of 1995: The requirements of section 12(d) of the National Technology Transfer and Advancement Act of 1995 (15 U.S.C. 272 note) are not applicable because this rulemaking does not contain provisions that involve the use of technical standards.

P. Paperwork Reduction Act of 1995: This final rule does not involve information collection requirements that are subject to review by the Office of Management and Budget (OMB) under the Paperwork Reduction Act of 1995 (44 U.S.C. 3501 *et seq.*).

Notwithstanding any other provision of law, no person is required to respond to, nor shall any person be subject to a penalty for failure to comply with, a collection of information subject to the requirements of the Paperwork Reduction Act unless that collection of information has a currently valid OMB control number.

List of Subjects in 37 CFR Part 6

Trademarks.

For the reasons given in the preamble and under the authority contained in 15 U.S.C. 1112, 1123 and 35 U.S.C. 2, as amended, the USPTO is amending part 6 of title 37 as follows:

PART 6—CLASSIFICATION OF GOODS AND SERVICES UNDER THE TRADEMARK ACT

■ 1. The authority citation for part 6 continues to read as follows:

Authority: Secs. 30, 41, 60 Stat. 436, 440; 15 U.S.C. 1112, 1123; 35 U.S.C. 2, unless otherwise noted.

■ 2. Revise § 6.1 to read as follows:

§ 6.1 International schedule of classes of goods and services.

Goods

1. Chemicals for use in industry, science and photography, as well as in agriculture, horticulture and forestry; unprocessed artificial resins, unprocessed plastics; fire extinguishing and fire prevention compositions; tempering and soldering preparations; substances for tanning animal skins and hides; adhesives for use in industry; putties and other paste fillers; compost, manures, fertilizers; biological preparations for use in industry and science.

2. Paints, varnishes, lacquers; preservatives against rust and against deterioration of wood; colorants, dyes; inks for printing, marking and engraving; raw natural resins; metals in foil and powder form for use in painting, decorating, printing and art.

3. Non-medicated cosmetics and toiletry preparations; non-medicated dentifrices; perfumery, essential oils; bleaching preparations and other substances for laundry use; cleaning, polishing, scouring and abrasive preparations.

4. Industrial oils and greases, wax; lubricants; dust absorbing, wetting and binding compositions; fuels and illuminants; candles and wicks for lighting.

5. Pharmaceuticals, medical and veterinary preparations; sanitary preparations for medical purposes; dietetic food and substances adapted for medical or veterinary use, food for babies; dietary supplements for human beings and animals; plasters, materials for dressings; material for stopping teeth, dental wax; disinfectants; preparations for destroying vermin; fungicides, herbicides.

6. Common metals and their alloys, ores; metal materials for building and construction; transportable buildings of metal; non-electric cables and wires of common metal; small items of metal hardware; metal containers for storage or transport; safes.

7. Machines, machine tools, power-operated tools; motors and engines, except for land vehicles; machine coupling and transmission components, except for land vehicles; agricultural implements, other than hand-operated hand tools; incubators for eggs; automatic vending machines.

8. Hand tools and implements, hand-operated; cutlery; side arms, except firearms; razors.

9. Scientific, research, navigation, surveying, photographic, cinematographic, audiovisual, optical, weighing, measuring, signalling, detecting, testing, inspecting, life-saving and teaching apparatus and instruments; apparatus and instruments for conducting, switching, transforming, accumulating, regulating or controlling the distribution or use of electricity; apparatus and instruments for recording, transmitting, reproducing or processing sound, images or data; recorded and downloadable media, computer software, blank digital or analogue recording and storage media; mechanisms for coin-operated apparatus; cash registers, calculating devices; computers and computer peripheral devices; diving suits, divers' masks, ear plugs for divers, nose clips for divers and swimmers, gloves for divers, breathing apparatus for underwater swimming; fire-extinguishing apparatus.

10. Surgical, medical, dental and veterinary apparatus and instruments; artificial limbs, eyes and teeth; orthopaedic articles; suture materials; therapeutic and assistive devices adapted for persons with disabilities; massage apparatus; apparatus, devices and articles for nursing infants; sexual activity apparatus, devices and articles.

11. Apparatus and installations for lighting, heating, cooling, steam generating, cooking, drying, ventilating, water supply and sanitary purposes.

12. Vehicles; apparatus for locomotion by land, air or water.

13. Firearms; ammunition and projectiles; explosives; fireworks.

14. Precious metals and their alloys; jewellery, precious and semi-precious stones; horological and chronometric instruments.

15. Musical instruments; music stands and stands for musical instruments; conductors' batons.

16. Paper and cardboard; printed matter; bookbinding material; photographs; stationery and office requisites, except furniture; adhesives for stationery or household purposes;

drawing materials and materials for artists; paintbrushes; instructional and teaching materials; plastic sheets, films and bags for wrapping and packaging; printers' type, printing blocks.

17. Unprocessed and semi-processed rubber, gutta-percha, gum, asbestos, mica and substitutes for all these materials; plastics and resins in extruded form for use in manufacture; packing, stopping and insulating materials; flexible pipes, tubes and hoses, not of metal.

18. Leather and imitations of leather; animal skins and hides; luggage and carrying bags; umbrellas and parasols; walking sticks; whips, harness and saddlery; collars, leashes and clothing for animals.

19. Materials, not of metal, for building and construction; rigid pipes, not of metal, for building; asphalt, pitch, tar and bitumen; transportable buildings, not of metal; monuments, not of metal.

20. Furniture, mirrors, picture frames; containers, not of metal, for storage or transport; unworked or semi-worked bone, horn, whalebone or mother-of-pearl; shells; meerschaum; yellow amber.

21. Household or kitchen utensils and containers; cookware and tableware, except forks, knives and spoons; combs and sponges; brushes, except paintbrushes; brush-making materials; articles for cleaning purposes; unworked or semi-worked glass, except building glass; glassware, porcelain and earthenware.

22. Ropes and string; nets; tents and tarpaulins; awnings of textile or synthetic materials; sails; sacks for the transport and storage of materials in bulk; padding, cushioning and stuffing materials, except of paper, cardboard, rubber or plastics; raw fibrous textile materials and substitutes therefor.

23. Yarns and threads for textile use.

24. Textiles and substitutes for textiles; household linen; curtains of textile or plastic.

25. Clothing, footwear, headwear.

26. Lace, braid and embroidery, and haberdashery ribbons and bows; buttons, hooks and eyes, pins and needles; artificial flowers; hair decorations; false hair.

27. Carpets, rugs, mats and matting, linoleum and other materials for covering existing floors; wall hangings, not of textile.

28. Games, toys and playthings; video game apparatus; gymnastic and sporting articles; decorations for Christmas trees.

29. Meat, fish, poultry and game; meat extracts; preserved, frozen, dried and cooked fruits and vegetables; jellies, jams, compotes; eggs; milk, cheese, butter, yogurt and other milk products; oils and fats for food.

30. Coffee, tea, cocoa and artificial coffee; rice, pasta and noodles; tapioca and sago; flour and preparations made from cereals; bread, pastries and confectionery; chocolate; ice cream, sorbets and other edible ices; sugar, honey, treacle; yeast, baking-powder; salt, seasonings, spices, preserved herbs; vinegar, sauces and other condiments; ice (frozen water).

31. Raw and unprocessed agricultural, aquacultural, horticultural and forestry products; raw and unprocessed grains and seeds; fresh fruits and vegetables, fresh herbs; natural plants and flowers; bulbs, seedlings and seeds for planting; live animals; foodstuffs and beverages for animals; malt.

32. Beers; non-alcoholic beverages; mineral and aerated waters; fruit beverages and fruit juices; syrups and other non-alcoholic preparations for making beverages.

33. Alcoholic beverages, except beers; alcoholic preparations for making beverages.

34. Tobacco and tobacco substitutes; cigarettes and cigars; electronic cigarettes and oral vaporizers for smokers; smokers' articles; matches.

Services

35. Advertising; business management, organization and administration; office functions.

36. Financial, monetary and banking services; insurance services; real estate affairs.

37. Construction services; installation and repair services; mining extraction, oil and gas drilling.

38. Telecommunications services.

39. Transport; packaging and storage of goods; travel arrangement.

40. Treatment of materials; recycling of waste and trash; air purification and treatment of water; printing services; food and drink preservation.

41. Education; providing of training; entertainment; sporting and cultural activities.

42. Scientific and technological services and research and design relating thereto; industrial analysis, industrial research and industrial design services; quality control and authentication services; design and development of computer hardware and software.

43. Services for providing food and drink; temporary accommodation.

44. Medical services; veterinary services; hygienic and beauty care for human beings or animals; agriculture, aquaculture, horticulture and forestry services.

45. Legal services; security services for the physical protection of tangible property and individuals; personal and social services rendered by others to meet the needs of individuals.

Dated: October 1, 2020.

Andrei Iancu,

Under Secretary of Commerce for Intellectual Property and Director of the United States Patent and Trademark Office.

[FR Doc. 2020–22353 Filed 11–2–20; 8:45 am]

BILLING CODE 3510–16–P

ENVIRONMENTAL PROTECTION AGENCY

40 CFR PART 52

[EPA–HQ–OAR–2020–0377; FRL–10015–79–OAR]

Findings of Failure To Submit State Implementation Plans Required for Attainment of the 2010 1-Hour Primary Sulfur Dioxide (SO_2) National Ambient Air Quality Standard (NAAQS)

AGENCY: Environmental Protection Agency (EPA).

ACTION: Final rule.

SUMMARY: The Environmental Protection Agency (EPA) is taking a final action to find that four states and territories (Indiana, Louisiana, Guam, and Puerto Rico) failed to submit State Implementation Plans (SIPs) to satisfy certain nonattainment area planning requirements of the Clean Air Act (CAA) for the 2010 1-Hour Primary Sulfur Dioxide (SO_2) National Ambient Air Quality Standard (NAAQS). The purpose of the development and implementation of nonattainment area SIPs is to provide for attainment of the NAAQS as expeditiously as practicable following the designation of an area as nonattainment. This action triggers certain CAA deadlines for the EPA to impose sanctions if a state or territory does not submit a complete SIP addressing the outstanding requirements and for the EPA to promulgate a Federal Implementation Plan (FIP) if the EPA does not approve a state's or territory's SIP.

DATES: The effective date of this action is December 3, 2020.

FOR FURTHER INFORMATION CONTACT: General questions concerning this notice should be addressed to Ms. Sydney Lawrence, Office of Air Quality Planning and Standards, Air Quality Policy Division, Mail Code: C539–01, 109 T.W. Alexander Drive, Research Triangle Park, NC 27709; by telephone (919) 541–4768; or by email at *lawrence.sydney@epa.gov.*

SUPPLEMENTARY INFORMATION:

Table of Contents

I. General Information
A. Notice and Comment Under the Administrative Procedure Act (APA)
B. How can I get copies of this document and other related information?
C. Where do I go if I have specific state or territory questions?
D. How is the preamble organized?
II. Background
III. Consequences of Findings of Failure To Submit
IV. Findings of Failure To Submit for States That Failed To Make a Nonattainment Area SIP Submittal
V. Environmental Justice Considerations
VI. Statutory and Executive Order Reviews
A. Executive Order 12866: Regulatory Planning and Executive Order 13563: Improving Regulation and Regulatory Review
B. Executive Order 13771: Reducing Regulations and Controlling Regulatory Costs
C. Paperwork Reduction Act (PRA)
D. Regulatory Flexibility Act (RFA)
E. Unfunded Mandates Reform Act of 1995 (UMRA)
F. Executive Order 13132: Federalism
G. Executive Order 13175: Consultation and Coordination With Indian Tribal Governments
H. Executive Order 13045: Protection of Children From Environmental Health and Safety Risks
I. Executive Order 13211: Actions That Significantly Affect Energy Supply, Distribution or Use
J. National Technology Transfer and Advancement Act (NTTAA)
K. Executive Order 12898: Federal Actions To Address Environmental Justice in Minority and Low-Income Populations
L. Congressional Review Act (CRA)
M. Judicial Review

I. General Information

A. Notice and Comment Under the Administrative Procedure Act (APA)

Section 553 of the APA, 5 U.S.C. 553(b)(3)(B), provides that, when an agency for good cause finds that notice and public procedure are impracticable, unnecessary or contrary to the public interest, the agency may issue a rule without providing notice and an opportunity for public comment. The EPA has determined that there is good cause for making this final agency action without prior proposal and opportunity for comment because no significant EPA judgment is involved in making findings of failure to submit SIPs, or elements of SIPs, required by the CAA, where states and territories have made no submissions, or incomplete submissions, to meet the requirement. Thus, notice and public procedures are unnecessary. The EPA finds that this constitutes good cause under 5 U.S.C. 553(b)(3)(B).

B. How can I get copies of this document and other related information?

The EPA has established a docket for this action under Docket ID No. EPA–HQ–OAR–2020–0377. All documents in the docket are listed on *http://www.regulations.gov* website. Although listed in the index, some information is not publicly available, *e.g.,* Confidential Business Information or information whose disclosure is restricted by statue. Certain other material, such as copyrighted material, is not placed on the internet and will be publicly available only in hard copy form through *http://www.regulations.gov.* Out of an abundance of caution for members of the public and our staff, EPA Docket Center and Reading Room are closed to the public, with limited exceptions, to reduce the risk of transmitting COVID–19. Our Docket Center staff will continue to provide remote customer service via email, phone, and webform. The telephone number for the Public Reading Room is (202) 566–1744 and the telephone number for the Office of Air and Radiation Docket and Information Center is (202) 566–1742. For further information on EPA Docket Center services and the current status, please visit us online at *https://www.epa.gov/dockets.*

C. Where do I go if I have specific state or territory questions?

For questions related to specific states or territories mentioned in this notice, please contact the appropriate EPA Regional Office:

EPA Region 2: Mr. Kirk Wieber, Air Programs Branch, EPA Region II, 290 Broadway, 25th Floor, New York 10007; *wieber.kirk@epa.gov*.	Puerto Rico.
EPA Region 5: Mr. Douglas Aburano, Chief, Attainment Planning and Maintenance Section, Air Programs Branch, EPA Region V, 77 West Jackson Street, Chicago, Illinois 60604; *aburano.douglas@epa.gov*.	Indiana.
EPA Region 6: Mr. Michael Feldman, Chief, SO_2 and Regional Haze Section, EPA Region 6, 1201 Elm Street, Suite 500, Dallas, Texas 75270; *feldman.michael@epa.gov*.	Louisiana.
EPA Region 9: Ms. Anita Lee, Manager, Air Planning Office, EPA Region 9, 75 Hawthorne Street, San Francisco, California 94105; *lee.anita@epa.gov*.	Guam.

II. Background

In June 2010, the EPA promulgated a new 1-hour primary SO_2 NAAQS of 75 parts per billion (ppb), which is met when the 3-year average of the annual 99th percentile of daily maximum 1-hour average concentrations does not exceed 75 ppb, as determined in accordance with Appendix T of 40 CFR part 50. *See* 40 CFR 50.17(a and (b). On January 9, 2018, the EPA, as part of the third round of area designations for the 2010 SO_2 NAAQS, designated five areas of the country as nonattainment for the 1-hour primary 2010 SO_2 NAAQS.[1] *See* 83 FR 1098, codified at 40 CFR part 81, subpart C. These area designations had an effective date of April 9, 2018.

Areas designated nonattainment for the SO_2 NAAQS are subject to the general nonattainment area planning requirements of CAA section 172 and to the SO_2-specific planning requirements of subpart 5 of part D of Title I of the CAA (sections 191 and 192). All components of the SO_2 part D nonattainment area SIP, including the emissions inventory, attainment demonstration, reasonably available control measures (RACM) and reasonably available control technology (RACT), enforceable emissions limitations and control measures, Reasonable Further Progress (RFP) plan, nonattainment New Source Review (NNSR) program, and contingency measures, are due to the EPA within 18 months of the effective date of designation of an area under CAA section 191. Thus, the nonattainment area SIPs for areas designated effective April 9, 2018, were due on October 9, 2019. These SIPs are required to demonstrate that their respective areas will attain the NAAQS as expeditiously as practicable, but no later than 5 years from the effective date of designation, or April 9, 2023.

[1] The EPA completed its first round of initial area designations for the 2010 1-hour primary SO_2 NAAQS on August 5, 2013, with an effective date of October 4, 2013. Under a court order issued on March 2, 2015, the EPA has completed two out of three additional rounds of designations, required to be completed by no later than December 31, 2020. The findings in this document apply only to those areas that were designated as a part of the third round of designations for the 2010 SO_2 NAAQS on January 9, 2018, with an effective date of April 9, 2018, and where, as of signature of this action, the affected states failed to submit required complete implementation plans to address attainment of the 1-hr primary SO_2 NAAQS.

III. Consequences of Findings of Failure To Submit

If the EPA finds that a state or territory has failed to make the required SIP submittal or that a submitted SIP is incomplete, then CAA section 179(a) establishes specific consequences, after a period of time, including the imposition of mandatory sanctions for the affected area. Additionally, such a finding triggers an obligation under CAA section 110(c) for the EPA to promulgate a FIP no later than 2 years after the finding of failure to submit if the affected state or territory has not submitted, and the EPA has not approved, the required SIP submittal.

If the EPA has not affirmatively determined that a state or territory has made the required complete SIP submittal for an area within 18 months of the effective date of this rulemaking, then, pursuant to CAA section 179(a) and (b) and 40 CFR 52.31, the offset sanction identified in CAA section 179(b)(2) will apply in the affected nonattainment area. If the EPA has not affirmatively determined that the state or territory has made a complete submission within 6 months after the offset sanction is imposed, then the highway funding sanction will apply in the affected nonattainment area, in accordance with CAA section 179(b)(1) and 40 CFR 52.31. The sanctions will not take effect, if, within 18 months after the effective date of these findings, the EPA affirmatively determines that the affected state or territory has made a complete SIP submittal addressing the deficiency for which the finding was made. Additionally, if the state or territory makes the required SIP submittal and the EPA takes final action to approve the submittal within 2 years of the effective date of these findings, the EPA is not required to promulgate a FIP for the affected nonattainment area.

IV. Findings of Failure To Submit for States That Failed To Make a Nonattainment Area SIP Submittal

As of the date of signature of this action, the four states and territories listed in Table 1 failed to make complete SIP submittals required under part D of Title I of the CAA by October 9, 2019, for the five areas designated nonattainment effective April 9, 2018. The specific components of the SO_2 part D nonattainment area SIP that the four states and territories failed to submit include: An accurate inventory of current emissions for all sources of SO_2 in the nonattainment area, an attainment demonstration, reasonably available control measures (RACM) and reasonably available control technology (RACT), enforceable emissions limitations and control measures, reasonable further progress (RFP) plan, nonattainment new source review (NNSR) program, and contingency measures. Therefore, the EPA is issuing findings of failure to submit SO_2 nonattainment area SIPs for four states and territories responsible for these areas.

TABLE 1—STATES OR TERRITORIES AND SO_2 NONATTAINMENT AREAS AFFECTED BY THESE FINDINGS OF FAILURE TO SUBMIT

EPA regional office	State or territory	Nonattainment area
Region 2	Puerto Rico	Guayama-Salinas: —Salinas Municipality (p).
Region 2	Puerto Rico	San Juan: —Cataño Municipality. —Toa Baja Municipality (p). —San Juan Municipality (p). —Guaynabo Municipality (p). —Bayamón Municipality (p).
Region 5	Indiana	Huntington: —Huntington County (p).
Region 6	Louisiana	Evangeline Parish: —Evangeline Parish (p).
Region 9	Guam	Piti-Cabras: —Piti-Cabras (p).

Note: Partial counties are indicated in the table as (p).

V. Environmental Justice Considerations

The EPA believes that the human health or environmental risks addressed by this action will not have disproportionately high or adverse human health or environmental effects on minority, low-income, or indigenous populations because it does not directly affect the level of protection provided to human health or the environment under the SO_2 NAAQS. The purpose of this rule is to make findings that the affected states and territories named failed to submit the required SIPs to provide for timely attainment of the 1-hour primary SO_2 NAAQS. In finding that certain states and territories failed to submit a complete SIP that satisfies the nonattainment area planning requirements under section 172 and subpart 5 of part D of Title I of the CAA (sections 191 and 192) for the 1-hour primary SO_2 NAAQS, this action does not directly affect the level of protection provided for human health or the environment. Moreover, it is intended that the actions and deadlines resulting from this notice will in fact lead to greater protection for U.S. citizens, including minority, low-income, or indigenous populations, by ensuring that states and territories meet their obligation to develop and submit SIPs to ensure that areas make progress toward attaining the 1-hour primary SO_2 NAAQS.

VI. Statutory and Executive Order Reviews

A. Executive Order 12866: Regulatory Planning and Executive Order 13563: Improving Regulation and Regulatory Review

This action is not a significant regulatory action and was, therefore, not submitted to the Office of Management and Budget (OMB) for review.

B. Executive Order 13771: Reducing Regulations and Controlling Regulatory Costs

This action is not an Executive Order 13771 regulatory action because this action is not significant under Executive Order 12866.

C. Paperwork Reduction Act (PRA)

This action does not impose an information collection burden under the provisions of the PRA. This final rule does not establish any new information collection requirement apart from what is already required by law. This rule relates to the requirement in the CAA for states and territories to submit SIPs under section 172 and subpart 5 of part D of Title I of the CAA (sections 191 and 192) which address the statutory requirements that apply to areas designated as nonattainment for the SO_2 NAAQS.

D. Regulatory Flexibility Act (RFA)

I certify that this rule will not have a significant economic impact on a substantial number of small entities under the RFA. This action will not impose any requirements on small entities. The rule is a finding that the named states and territories have not made the necessary SIP submission for nonattainment areas to meet the requirements of part D, title I of the CAA.

E. Unfunded Mandates Reform Act of 1995 (UMRA)

This action does not contain any unfunded mandate as described in UMRA 2 U.S.C. 1531–1538, and does not significantly or uniquely affect small governments. The action imposes no enforceable duty on any state, territorial, local or tribal governments or the private sector.

F. Executive Order 13132: Federalism

This action does not have federalism implications. It will not have substantial direct effects on the named states or territories, on the relationship between the national government and named the states or territories, or on the distribution of power and responsibilities among the various levels of government.

G. Executive Order 13175: Consultation and Coordination With Indian Tribal Governments

This action does not have tribal implications as specified in Executive Order 13175. This rule finds that the named states and territories failed to submit a complete SIP that satisfies the nonattainment area plan requirements under section 172 and subpart 5 of part D of Title I of the CAA (sections 191 and 192) for the 1-hour primary SO_2 NAAQS. No tribe is subject to the requirement to submit an implementation plan under section 172 or under subpart 5 of part D of Title I of the CAA. Thus, Executive Order 13175 does not apply to this action.

H. Executive Order 13045: Protection of Children From Environmental Health and Safety Risks

The EPA interprets Executive Order 13045 as applying only to those regulatory actions that concern health or safety risks that the EPA has reason to believe may disproportionately affect children, per the definition of ''covered regulatory action'' in section 2–202 of the Executive Order. This action is not subject to Executive Order 13045 because it is a finding that the named states and territories failed to submit a complete SIP that satisfies the nonattainment area plan requirements under section 172 and subpart 5 of part D of Title I of the CAA for the 1-hour primary SO_2 NAAQS and does not directly or disproportionately affect children.

I. Executive Order 13211: Actions That Significantly Affect Energy Supply, Distribution or Use

This action is not subject to Executive Order 13211, because it is not a significant regulatory action under Executive Order 12866.

J. National Technology Transfer and Advancement Act (NTTAA)

This rulemaking does not involve technical standards.

K. Executive Order 12898: Federal Actions To Address Environmental Justice in Minority Populations and Low-Income Populations

The EPA believes the human health or environmental risk addressed by this action will not have potential disproportionately high and adverse human health or environmental effects on minority, low-income, or indigenous populations. In finding that the named states and territories have failed to submit a complete SIP that satisfies the nonattainment area plan requirements under section 172 and subpart 5 of part D of Title I of the CAA for the 1-hour primary SO_2 NAAQS, this action does not directly affect the level of protection provided to human health or the environment.

L. Congressional Review Act (CRA)

This action is subject to the CRA, and EPA will submit a rule report to each House of the Congress and to the Comptroller General of the United States. This action is not a ''major rule'' as defined by 5 U.S.C. 804(2).

M. Judicial Review

Section 307(b)(1) of the CAA indicates which Federal Courts of Appeal have venue for petitions of review of final actions by the EPA under the CAA. This section provides, in part, that petitions for review must be filed in the United States Court of Appeals for the District of Columbia Circuit if (i) the agency action consists of ''nationally applicable regulations promulgated, or final actions taken, by the Administrator,'' or (ii) such action is locally or regionally applicable, but ''such action is based on a determination of nationwide scope or effect and if in taking such action the Administrator finds and publishes that such action is based on such a determination.''

This final action is nationally applicable. To the extent a court finds this final action to be locally or regionally applicable, the EPA finds that this action is based on a determination of ''nationwide scope or effect'' within the meaning of CAA section 307(b)(1). This final action consists of findings of failure to submit required SIPs from four states and territories for five named nonattainment areas for the 2010 primary 1-hour SO_2 NAAQS, located in four of the 10 EPA Regions, and in four different federal judicial circuits. This final action is also based on a common core of factual findings concerning the receipt and completeness of the relevant SIP submittals. For these reasons, this final action is nationally applicable or, alternatively, to the extent a court finds this action to be locally or regionally applicable, the Administrator has determined that this final action is based on a determination of nationwide scope or effect for purposes of CAA section 307(b)(1).

Under section 307(b)(1) of the CAA, petitions for judicial review of this action must be filed in the United States Court of Appeals for the District of Columbia Circuit within 60 days from the date this final action is published in the **Federal Register**.

Filing a petition for reconsideration by the Administrator of this final action does not affect the finality of the action for the purposes of judicial review, nor does it extend the time within which a petition for judicial review must be filed and shall not postpone the effectiveness of such rule or action.

List of Subjects in 40 CFR Part 52

Environmental protection, Approval and promulgation of implementation plans, Administrative practice and procedures, Air pollution control, Incorporation by reference, Intergovernmental relations, and Reporting and recordkeeping requirements.

Dated: October 8, 2020.

Anne L. Austin,

Principal Deputy Assistant Administrator.

[FR Doc. 2020–22947 Filed 11–2–20; 8:45 am]

BILLING CODE 6560–50–P

ENVIRONMENTAL PROTECTION AGENCY

40 CFR Part 63

[EPA–HQ–OAR–2020–0016; FRL–10015–94–OAR]

RIN 2060–AU25

National Emission Standards for Hazardous Air Pollutants: Phosphoric Acid Manufacturing

AGENCY: Environmental Protection Agency (EPA).

ACTION: Final rule.

SUMMARY: This action finalizes an amendment to the national emission standards for hazardous air pollutants (NESHAP) for the Phosphoric Acid Manufacturing source category. The final amendment is in response to a petition for rulemaking on the mercury emission limit for existing phosphate rock calciners that was finalized on August 19, 2015 (''2015 Rule''). That emission limit was based on the maximum achievable control technology (MACT) floor for existing sources. All six of the existing calciners used to set this MACT floor are located at the PCS Phosphate Company, Inc. (''PCS Phosphate'') facility in Aurora, North Carolina (''PCS Aurora''). PCS Phosphate asserted that data received since the rule's promulgation indicate that the MACT floor did not accurately reflect the average emission limitation achieved by the units used to set the standard. Based on these new data, the U.S. Environmental Protection Agency (EPA) is finalizing a revision of the mercury MACT floor for existing calciners.

DATES: This final rule is effective on November 3, 2020.

ADDRESSES: The EPA has established a docket for this action under Docket ID No. EPA–HQ–OAR–2020–0016. All documents in the docket are listed in *https://www.regulations.gov/.* Although listed, some information is not publicly available, *e.g.,* Confidential Business Information or other information whose disclosure is restricted by statute. Certain other material, such as copyrighted material, is not placed on the internet and will be publicly available only in hard copy form. With the exception of such material, publicly available docket materials are available electronically through *https://www.regulations.gov/.* Out of an abundance of caution for members of the public and our staff, the EPA Docket Center and Reading Room are closed to the public, with limited exceptions, to reduce the risk of transmitting COVID–19. Our Docket Center staff will continue to provide remote customer service via email, phone, and webform. For further information on EPA Docket Center services and the current status, please visit us online at *https://www.epa.gov/dockets.*

FOR FURTHER INFORMATION CONTACT: For questions about this final action, contact Mr. John Feather, Sector Policies and Programs Division (D243–04), Office of Air Quality Planning and Standards, U.S. Environmental Protection Agency, Research Triangle Park, North Carolina 27711; telephone number: (919) 541–3052; fax number: (919) 541–4991 and email address: *feather.john@epa.gov.*

SUPPLEMENTARY INFORMATION:

Preamble acronyms and abbreviations. We use multiple acronyms and terms in this preamble. While this list may not be exhaustive, to ease the reading of this preamble and for reference purposes, the EPA defines the following terms and acronyms here:

BTF beyond-the-floor
CAA Clean Air Act
CFR Code of Federal Regulations
CRA Congressional Review Act
HAP hazardous air pollutants(s)
ICR Information Collection Request
lb/yr pounds per year
MACT maximum achievable control technology
mg/dscm milligrams per dry standard cubic meter
NAICS North American Industry Classification System
NESHAP national emission standards for hazardous air pollutants
NTTAA National Technology Transfer and Advancement Act
OMB Office of Management and Budget
PRA Paperwork Reduction Act
RFA Regulatory Flexibility Act
UMRA Unfunded Mandates Reform Act
U.S.C. United States Code

Background information. On April 7, 2020, the EPA proposed revisions to the Phosphoric Acid Manufacturing NESHAP (85 FR 19412). In this action, we are finalizing decisions and revisions for the rule. We summarize some of the more significant comments we timely received regarding the proposed rule and provide our responses in this preamble. A summary of all other public comments on the proposal and the EPA's responses to those comments is available in the *Summary of Public Comments and Responses for the Phosphoric Acid Manufacturing NESHAP,* Docket ID No. EPA–HQ–OAR–2020–0016.

Organization of this document. The information in this preamble is organized as follows:

I. General Information
A. Does this action apply to me?
B. Where can I get a copy of this document and other related information?
C. Judicial Review and Administrative Reconsideration
II. Background
III. Summary of the Final Amendments
IV. Summary of Comments and Responses
V. Summary of Cost, Environmental, and Economic Impacts
VI. Statutory and Executive Order Reviews
A. Executive Orders 12866: Regulatory Planning and Review and Executive Order 13563: Improving Regulation and Regulatory Review
B. Executive Order 13771: Reducing Regulations and Controlling Regulatory Costs
C. Paperwork Reduction Act (PRA)
D. Regulatory Flexibility Act (RFA)
E. Unfunded Mandates Reform Act (UMRA)
F. Executive Order 13132: Federalism
G. Executive Order 13175: Consultation and Coordination With Indian Tribal Governments
H. Executive Order 13045: Protection of Children From Environmental Health Risks and Safety Risks
I. Executive Order 13211: Actions Concerning Regulations That Significantly Affect Energy Supply, Distribution, or Use
J. National Technology Transfer and Advancement Act (NTTAA)
K. Executive Order 12898: Federal Actions To Address Environmental Justice in Minority Populations and Low-Income Populations
L. Congressional Review Act (CRA)

I. General Information

A. Does this action apply to me?

Regulated entities. Categories and entities potentially regulated by this action are shown in Table 1 of this preamble.

TABLE 1—NESHAP AND INDUSTRIAL SOURCE CATEGORIES AFFECTED BY THIS FINAL ACTION

NESHAP and source category	NAICS [1] code
Phosphoric Acid Manufacturing ..	325312

[1] North American Industry Classification System.

Table 1 of this preamble is not intended to be exhaustive, but rather to provide a guide for readers regarding entities likely to be affected by the final action for the source category listed. To determine whether your facility is affected, you should examine the applicability criteria in the appropriate

NESHAP. If you have any questions regarding the applicability of any aspect of this NESHAP, please contact the appropriate person listed in the preceding **FOR FURTHER INFORMATION CONTACT** section of this preamble.

B. Where can I get a copy of this document and other related information?

In addition to being available in the docket, an electronic copy of this final action will also be available on the internet. Following signature by the EPA Administrator, the EPA will post a copy of this final action at: *https://www.epa.gov/stationary-sources-air-pollution/phosphate-fertilizer-production-plants-and-phosphoric-acid.* Following publication in the **Federal Register**, the EPA will post the **Federal Register** version and key technical documents at this same website.

C. Judicial Review and Administrative Reconsideration

Under Clean Air Act (CAA) section 307(b)(1), judicial review of this final action is available only by filing a petition for review in the United States Court of Appeals for the District of Columbia Circuit (the court) by January 4, 2021. Under CAA section 307(b)(2), the requirements established by this final rule may not be challenged separately in any civil or criminal proceedings brought by the EPA to enforce the requirements.

Section 307(d)(7)(B) of the CAA further provides that only an objection to a rule or procedure which was raised with reasonable specificity during the period for public comment (including any public hearing) may be raised during judicial review. This section also provides a mechanism for the EPA to reconsider the rule if the person raising an objection can demonstrate to the Administrator that it was impracticable to raise such objection within the period for public comment or if the grounds for such objection arose after the period for public comment (but within the time specified for judicial review) and if such objection is of central relevance to the outcome of the rule. Any person seeking to make such a demonstration should submit a Petition for Reconsideration to the Office of the Administrator, U.S. Environmental Protection Agency, Room 3000, WJC South Building, 1200 Pennsylvania Ave. NW, Washington, DC 20460, with a copy to both the person listed in the preceding **FOR FURTHER INFORMATION CONTACT** section, and the Associate General Counsel for the Air and Radiation Law Office, Office of General Counsel (Mail Code 2344A), U.S. Environmental Protection Agency, 1200 Pennsylvania Ave. NW, Washington, DC 20460.

II. Background

In the 2015 Rule, the EPA published final amendments to the Phosphoric Acid Manufacturing and Phosphate Fertilizer Production NESHAP (80 FR 50386). As part of that action, we established MACT-based mercury emission limits for new and existing calciners within the Phosphoric Acid Manufacturing source category. These limits were based on emission data from the six identical calciners at the PCS Aurora facility. Because these six sources are of identical design and use the same fuel and feed, we determined that they should be treated as a single source for purposes of MACT floor development. As a result, we combined the emission test results for the different calciners into a single database that we used as the basis to set MACT floor emission limits for both new and existing sources. We also evaluated a beyond-the-floor (BTF) option for MACT for existing calciners but did not select the BTF option as MACT because we determined that the economic impacts to the facility would not be reasonable. We did set a BTF limit for new calciners.

Following promulgation of the 2015 Rule, PCS Phosphate petitioned for reconsideration, pursuant to section 307(d)(7)(B) of the CAA, on October 16, 2015. The EPA granted the petition for reconsideration of the issues presented at the time relating to the compliance schedules, monitoring, and compliance options for air oxidation reactors and scrubbers. This reconsideration was finalized on September 28, 2017 (82 FR 45193). However, subsequent to this petition for reconsideration, compliance testing of the calciners for mercury emissions in 2016 showed that three calciners at the Aurora facility exceeded the MACT limit, with the three other calciners near the limit. For reference, the mean calciner compliance emissions concentration in 2016 was 0.143 milligrams per dry standard cubic meter (mg/dscm) at 3-percent oxygen, higher than the MACT limit of 0.14 mg/dscm at 3-percent oxygen. The mean of the 2016 compliance emissions concentrations was 44 percent higher than the mean of the data from the 2010 and 2014 Information Collection Requests (ICRs) that were used to develop the 2015 Rule's emission limit. On May 10, 2016, PCS Phosphate submitted a letter to the EPA requesting a revision to the calciner mercury MACT floor standard. On September 6, 2016, PCS Phosphate added the calciner mercury limit to its earlier petition for reconsideration. This additional request was not raised with reasonable specificity or within 60 days of the publication of the 2015 Rule, so the mercury MACT floor issue was not included in the EPA's 2017 reconsideration of the 2015 Rule. However, on the basis of the test data presented, the EPA was convinced there was justification to review the mercury calciner limit and include new emissions data in analysis of that limit.

Because of our evaluation of the emission data, as explained in more detail in the proposal and supporting documents (Docket ID No. EPA–HQ–OAR–2020–0016), the EPA proposed to revise the mercury emission standard for existing calciners. We received public comments on the proposed rule amendment from six parties. Copies of all comments submitted are available electronically through the docket. In this document, the EPA is taking final action on this revision as proposed.

III. Summary of the Final Amendments

The EPA is amending 40 CFR part 63, subpart AA. This amendment is in response to a petition for a rulemaking to amend the 2015 Rule's calciner mercury MACT floor emission limit, submitted by PCS Phosphate to the Agency on September 6, 2016. The petition is available in the docket for this action (Docket Item No. EPA–HQ–OAR–2020–0016–0007). The EPA is increasing the MACT floor-based mercury emission limit for existing calciners from 0.14 mg/dscm at 3-percent oxygen to 0.23 mg/dscm at 3-percent oxygen. Table 1 to Subpart AA of Part 63—Existing Source Emission Limits, is reproduced in its entirety at the end of this preamble for the sake of clarity. The EPA is amending only the existing source mercury limit for phosphate rock calciners, along with references to its accompanying compliance date. This amendment does not impact any other aspect of the table or regulatory text. The EPA is not amending the mercury emission limit for new sources.

IV. Summary of Comments and Responses

The following is a summary of the significant comments received on the proposed amendments to mercury emission standards for existing phosphate rock calciners and our responses to these comments.

Comment: Several commenters expressed concern that the EPA did not sufficiently consider the risk effects, particularly related to inhalation, of mercury emissions associated with a

less stringent standard, and whether stricter limits may be required.

Response: In its recent decision in *Citizens for Pennsylvania's Future, et al.,* v. *Wheeler,* 19–cv–02004–VC (N.D. Cal. 2020), the United States District Court for the Northern District of California affirmed that 42 U.S.C. 7412(f)(2)(A) does not impose a mandatory duty for the EPA to revisit risk assessments when we revise technology-based standards. Moreover, in this case a reassessment of the risks was unnecessary given the conservativism in our risk analysis completed in 2015. The risk assessment supporting the 2015 Rule (''Residual Risk Assessment for the Phosphate Fertilizer and Phosphoric Acid Source Categories in Support of the July 2015 Risk and Technology Review Final Rule,'' Docket Item No. EPA–HQ–OAR–2012–0522–0081) evaluated risks due to emissions of hazardous air pollutants (HAP) from calciners, including human health effects from chronic and acute inhalation exposure to mercury emissions. The 2015 Rule's risk assessment conservatively modeled phosphoric acid calciner mercury emissions of 352 pounds per year (lb/yr), which is considerably greater than the 264 lb/yr that we estimate will be emitted in compliance with the revised mercury emission limit. The calciner mercury emission values used to model risk were overestimates because they were based on inaccurate production values and because of the different test method used to derive the emissions estimates used in the risk assessment. As described in the 2015 Rule's emission data memorandum (''Emissions Data Used in Residual Risk Modeling: Phosphoric Acid and Phosphate Fertilizer Production Source Categories,'' Docket Item No. EPA–HQ–OAR–2012–0522–0011), an inaccurate projection was made of calciner emissions based on the annual production value and emissions of the one calciner tested in the 2010 ICR. This overestimate applied to all calciner HAP emissions used for modeling purposes, including mercury values. The BTF memorandum (''Beyond-the-Floor Analysis for Phosphate Rock Calciners at Phosphoric Acid Manufacturing Plants—Final Rule,'' Docket Item No. EPA–HQ–OAR–2012–0522–0082) further explained that the risk assessment used speciated mercury data obtained from the Ontario-Hydro test method. These data provided information on the relative prevalence of divalent mercury compared to elemental mercury, but also showed higher emissions than those obtained using EPA Method 30B. EPA Method 30B is the method used to determine facility compliance and is the basis of the calciner mercury estimates in this action and the 2015 Rule. We originally calculated allowable emissions by scaling measured emissions to the permitted design capacity, so increased operational throughputs would not change that evaluation. Using the conservative mercury emission estimates from our 2015 Rule's risk assessment, we still determined that the risk posed by emissions from the category, including mercury calciner emissions, was acceptable, that the standards provided an ample margin of safety to protect public health, and that no additional standards were necessary to prevent, taking into consideration costs, energy, safety, and other relevant factors, an adverse environmental effect. These conclusions have not changed.

Comment: One commenter stated that the EPA did not evaluate increased emissions of HAP other than mercury, such as lead, and whether calcination of higher mercury materials may affect lead emissions. The commenter feels these data should be included in the risk evaluation.

Response: The EPA is unaware of any evidence of a correlation between mercury and lead emissions from sources in this source category. This revision of the mercury emission limit for existing calciners is based on additional data that became available for analysis. Emissions of other HAP, such as lead, will not be changed by this action. No operational changes are expected as a result of this action. As discussed in the previous response, any changes in calciner operations since relevant data were originally gathered do not change the determinations made based on the 2015 Rule's risk assessment. This action does not affect emission limits for non-mercury HAP surrogates, which remain subject to current compliance requirements and are out of the scope of this action.

Comment: One commenter claimed that test reports for EPA Method 30B data were not available and that this precluded quality assurance or proper evaluation of analyses by the facility or the EPA.

Response: Compliance test reports are publicly available through WebFire (*https://cfpub.epa.gov/webfire/*). In addition, the mercury compliance test reports, along with the mercury study carried out as part of the consent order, have been added to the docket. We verified that the reported information was the same as that used to calculate the revised MACT floor. These methods and reports have been validated and have undergone quality assurance. Extensive data summaries used by the EPA to analyze the MACT floor were posted in the docket for the proposed rule and were sufficient to allow proper evaluation of relevant analyses.

Comment: One commenter supported the proposed decisions to revise the 2015 calciner mercury MACT floor standard and not pursue a BTF standard. The commenter agreed that the risk assessment shows add-on controls are not required to protect human health or the environment.

Response: We acknowledge the commenter's support of the EPA's proposed decisions.

Comment: One commenter asserted that the EPA did not consider mercury control by raw material selection and that the feasibility of determining the spatial variability of mercury concentration in phosphate rock resources has been demonstrated. Another commenter provided information which demonstrates that ore-switching is both technically infeasible and inconsistent with current permit requirements.

Response: The MACT floor for calciners was established pursuant to CAA section 112(d)(3) as the average emission limitation achieved by a single facility that uses a single source of raw material, which is mined on-site. Once the MACT floor has been established, raw material selection would be a BTF control option, discussed in CAA section 112(d)(2). In this case, raw material selection is not a feasible option to implement, as is supported by statements from another commenter. The EPA's site visit report for PCS Aurora (Docket Item No. EPA–HQ–OAR–2020–0016–0008) describes that this facility operates by processing phosphate rock that was mined on-site. The facility is constrained by their mining permit to mine certain areas of the phosphate rock in a certain order. In addition, the mining process itself inherently results in the ore being thoroughly mixed. Low-mercury phosphate rock could not be selectively targeted for mining and calciner processing. Material substitution would not be a feasible means to reduce HAP emissions.

V. Summary of Cost, Environmental, and Economic Impacts

Only the PCS Aurora facility and its six calciners are expected to be affected by the change to the existing calciner MACT floor emission limit for mercury finalized in this action. We are revising the MACT floor based on new data from PCS Phosphate for the existing calciners. Since neither this amendment

nor the 2015 Rule anticipated a need to install controls, we do not anticipate a change in actual mercury emissions as a result of this action. Currently, we estimate total actual emissions of mercury from all six calciners to be 264 lb/yr, less than the 352 lb/yr conservatively estimated for modeling purposes in the 2015 Rule, so our conclusions related to human health risk are unchanged and we continue to anticipate no adverse environmental impact. The 2015 Rule set a mercury limit of 0.14 mg/dscm at 3-percent oxygen that the existing calciners could not achieve under normal operations. Without this amendment, additional controls such as an activated carbon injection system would be necessary to comply with the 2015 Rule's standard. The revised standard that does not require installation of those controls represents a cost-savings for the facility, since those expenditures are no longer expected to be necessary. We estimate that installing new activated carbon injection control equipment to meet the 2015 Rule's calciner mercury standard would have resulted in a present value cost of approximately $26 million (2017 dollars) discounted at 7 percent to 2019 over a 5-year analytical period. Therefore, this action will result in a total cost savings of $26 million over the analytical period. For more detail, see the economic impact analysis memorandum in the docket, unchanged since the proposal (Docket Item No. EPA–HQ–OAR–2020–0016–0013).

VI. Statutory and Executive Order Reviews

Additional information about these statutes and Executive orders can be found at *https://www.epa.gov/laws-regulations/laws-and-executive-orders.*

A. Executive Orders 12866: Regulatory Planning and Review and Executive Order 13563: Improving Regulation and Regulatory Review

This action is not a significant regulatory action and was, therefore, not submitted to the Office of Management and Budget (OMB) for review.

B. Executive Order 13771: Reducing Regulations and Controlling Regulatory Costs

This action is considered an Executive Order 13771 deregulatory action. Details on the estimated cost savings of this final rule can be found in the EPA's analysis of the potential costs and benefits associated with this action.

C. Paperwork Reduction Act (PRA)

This action does not impose any new information collection burden under the PRA. OMB has previously approved the information collection activities contained in the existing regulations and has assigned OMB control number 2060–0361. With this action, the EPA is finalizing amendments to the 40 CFR part 63, subpart AA, rule language narrowly concerning the existing calciner mercury MACT floor. Therefore, the EPA believes that there are no changes to the information collection requirements of the 2015 Rule. The information collection estimate of projected cost and hour burden has not been revised due to any impacts from this action.

D. Regulatory Flexibility Act (RFA)

I certify that this action will not have a significant economic impact on a substantial number of small entities under the RFA. This action will not impose any requirements on small entities. The single facility subject to the existing calciner mercury MACT floor requirements of 40 CFR part 63, subpart AA, is not a small entity.

E. Unfunded Mandates Reform Act (UMRA)

This action does not contain any unfunded mandate as described in UMRA, 2 U.S.C. 1531–1538, and does not significantly or uniquely affect small governments. The action imposes no enforceable duty on any state, local, or tribal governments or the private sector.

F. Executive Order 13132: Federalism

This action does not have federalism implications. It will not have substantial direct effects on the states, on the relationship between the National Government and the states, or on the distribution of power and responsibilities among the various levels of government.

G. Executive Order 13175: Consultation and Coordination With Indian Tribal Governments

This action does not have tribal implications as specified in Executive Order 13175. This action will not have substantial direct effects on tribal governments, on the relationship between the Federal Government and Indian tribes, or on the distribution of power and responsibilities between the Federal Government and Indian tribes, as specified in Executive Order 13175. Thus, Executive Order 13175 does not apply to this action.

H. Executive Order 13045: Protection of Children From Environmental Health Risks and Safety Risks

The EPA interprets Executive Order 13045 as applying to those regulatory actions that concern environmental health or safety risks that the EPA has reason to believe may disproportionately affect children, per the definition of ''covered regulatory action'' in section 2–202 of the Executive Order. This action is not subject to Executive Order 13045 because it does not concern an environmental health risk or safety risk.

I. Executive Order 13211: Actions Concerning Regulations That Significantly Affect Energy Supply, Distribution, or Use

This action is not subject to Executive Order 13211 because it is not a significant regulatory action under Executive Order 12866.

J. National Technology Transfer and Advancement Act (NTTAA)

This action does not involve technical standards.

K. Executive Order 12898: Federal Actions To Address Environmental Justice in Minority Populations and Low-Income Populations

The EPA believes that this action does not have disproportionately high and adverse human health or environmental effects on minority populations, low-income populations, and/or indigenous peoples, as specified in Executive Order 12898 (59 FR 7629, February 16, 1994). The environmental justice finding in the 2015 Rule remains relevant in this action, which is finalizing amendments to the 40 CFR part 63, subpart AA, existing rule language narrowly concerning the calciner mercury MACT floor.

L. Congressional Review Act (CRA)

This action is subject to the CRA, and the EPA will submit a rule report to each House of the Congress and to the Comptroller General of the United States. This action is not a ''major rule'' as defined by 5 U.S.C. 804(2).

List of Subjects in 40 CFR Part 63

Environmental protection, Administrative practice and procedures, Air pollution control, Hazardous substances, Reporting and recordkeeping requirements.

Andrew Wheeler,
Administrator.

For the reasons set forth in the preamble, the EPA is amending 40 CFR part 63 as follows:

PART 63—NATIONAL EMISSION STANDARDS FOR HAZARDOUS AIR POLLUTANTS FOR SOURCE CATEGORIES

■ 1. The authority citation for part 63 continues to read as follows:

Authority: 42 U.S.C. 7401 *et seq.*

Subpart AA—National Emission Standards for Hazardous Air Pollutants for Phosphoric Acid Manufacturing Plants

■ 2. In § 63.602, revise paragraph (a)(2)(ii) to read as follows:

§ 63.602 Standards and compliance dates.

(a) * * *

(2) * * *

(ii) You must comply with the mercury emission limit specified in Table 1 to this subpart beginning on November 3, 2020.

* * * * *

■ 3. Revise table 1 to subpart AA of part 63 to read as follows:

TABLE 1 TO SUBPART AA OF PART 63—EXISTING SOURCE EMISSION LIMITS [a] [b]

For the following existing sources . . .	You must meet the emission limits for the specified pollutant . . .		
	Total fluorides	Total particulate	Mercury
Wet-Process Phosphoric Acid Line	0.020 lb/ton of equivalent P_2O_5 feed.		
Superphosphoric Acid Process Line [c]	0.010 lb/ton of equivalent P_2O_5 feed.		
Superphosphoric Acid Process Line with a Submerged Combustion Process.	0.20 lb/ton of equivalent P_2O_5 feed.		
Phosphate Rock Dryer		0.2150 lb/ton of phosphate rock feed.	
Phosphate Rock Calciner	9.0E–04 lb/ton of rock feed [d]	0.181 g/dscm	0.23 mg/dscm corrected to 3-percent oxygen [e]

[a] The existing source compliance data is June 10, 2002, except as noted.
[b] During periods of startup and shutdown, for emission limits stated in terms of pounds of pollutant per ton of feed, you are subject to the work practice standards specified in § 63.602(f).
[c] Beginning on August 19, 2018, you must include oxidation reactors in superphosphoric acid process lines when determining compliance with the total fluorides limit.
[d] Compliance date is August 19, 2015.
[e] Compliance date November 3, 2020.

[FR Doc. 2020–24280 Filed 11–2–20; 8:45 am]
BILLING CODE 6560–50–P

ENVIRONMENTAL PROTECTION AGENCY

40 CFR Part 180

[EPA–HQ–OPP–2013–0218 and EPA–HQ–OPP–2013–0219; FRL–10015–39]

RIN 2070–ZA16

Dipropylene Glycol and Triethylene Glycol; Exemption From the Requirement of a Tolerance

AGENCY: Environmental Protection Agency (EPA).

ACTION: Final rule.

SUMMARY: The Environmental Protection Agency (EPA) is exempting residues of the antimicrobial pesticide ingredients dipropylene glycol and triethylene glycol from the requirement of a tolerance when used on or applied to food-contact surfaces in public eating places, dairy-processing equipment, and food-processing equipment and utensils. The Agency is finalizing this rule on its own initiative under the Federal Food, Drug, and Cosmetic Act (FFDCA) to address residues identified as part of the Agency's registration review program under the Federal Insecticide, Fungicide, and Rodenticide Act (FIFRA).

DATES: This regulation is effective November 3, 2020. Objections and requests for hearings must be received on or before January 4, 2021 and must be filed in accordance with the instructions provided in 40 CFR part 178 (see also Unit I.C. of the **SUPPLEMENTARY INFORMATION**).

ADDRESSES: The dockets for this action, identified by docket identification (ID) numbers EPA–HQ–OPP–2013–0219 and EPA–HQ–OPP–2013–0218, are available at *http://www.regulations.gov* or at the Office of Pesticide Programs Regulatory Public Docket (OPP Docket) in the Environmental Protection Agency Docket Center (EPA/DC), West William Jefferson Clinton Bldg., Rm. 3334, 1301 Constitution Ave. NW, Washington, DC 20460–0001. The Public Reading Room is open from 8:30 a.m. to 4:30 p.m., Monday through Friday, excluding legal holidays. The telephone number for the Public Reading Room is (202) 566–1744, and the telephone number for the OPP Docket is (703) 305–5805.

Due to the public health concerns related to COVID–19, the EPA Docket Center (EPA/DC) and Reading Room is closed to visitors with limited exceptions. The staff continues to provide remote customer service via email, phone, and webform. For the latest status information on EPA/DC services and docket access, visit *https://www.epa.gov/dockets.*

FOR FURTHER INFORMATION CONTACT: Anita Pease, Antimicrobials Division (7510P), Office of Pesticide Programs, Environmental Protection Agency, 1200 Pennsylvania Ave. NW, Washington, DC 20460–0001; main telephone number: (703) 305–7090; email address: *ADFRNotices@epa.gov.*

SUPPLEMENTARY INFORMATION:

I. General Information

A. Does this action apply to me?

You may be potentially affected by this action if you are a pesticide manufacturer. The following list of North American Industrial Classification System (NAICS) codes is not intended to be exhaustive, but rather provides a guide to help readers determine whether this document applies to them. Potentially affected entities may include:

- Crop production (NAICS code 111), *e.g.,* agricultural workers; greenhouse, nursery, and floriculture workers; farmers.
- Animal production (NAICS code 112), *e.g.,* cattle ranchers and farmers, dairy cattle farmers, livestock farmers.

• Food manufacturing (NAICS code 311), *e.g.,* agricultural workers; farmers; greenhouse, nursery, and floriculture workers; ranchers; pesticide applicators.

• Pesticide manufacturing (NAICS code 32532), *e.g.,* agricultural workers; commercial applicators; farmers; greenhouse, nursery, and floriculture workers; residential users.

B. How can I get electronic access to other related information?

You may access a frequently updated electronic version of 40 CFR part 180 through the Government Printing Office's e-CFR site at *http://www.ecfr.gov/cgi-bin/text-idx?&c=ecfr&tpl=/ecfrbrowse/Title40/40tab_02.tpl.*

C. How can I file an objection or hearing request?

Under FFDCA section 408(g), 21 U.S.C. 346a, any person may file an objection to any aspect of this regulation and may also request a hearing on those objections. You must file your objection or request a hearing on this regulation in accordance with the instructions provided in 40 CFR part 178. To ensure proper receipt by EPA, you must identify docket ID numbers EPA–HQ–OPP–2013–0218 and EPA–HQ–OPP–2013–0219 in the subject line on the first page of your submission. All objections and requests for a hearing must be in writing and must be received by the Hearing Clerk on or before January 4, 2021. Addresses for mail and hand delivery of objections and hearing requests are provided in 40 CFR 178.25(b).

In addition to filing an objection or hearing request with the Hearing Clerk as described in 40 CFR part 178, please submit a copy of the filing (excluding any Confidential Business Information (CBI)) for inclusion in the public docket. Information not marked confidential pursuant to 40 CFR part 2 may be disclosed publicly by EPA without prior notice. Submit the non-CBI copy of your objection or hearing request, identified by docket ID numbers EPA–HQ–OPP–2013–0218 and EPA–HQ–OPP–2013–0219, by one of the following methods:

• *Federal eRulemaking Portal: http://www.regulations.gov.* Follow the online instructions for submitting comments. Do not submit electronically any information you consider to be CBI or other information whose disclosure is restricted by statute.

• *Mail:* OPP Docket, Environmental Protection Agency Docket Center (EPA/DC), (28221T), 1200 Pennsylvania Ave. NW, Washington, DC 20460–0001.

• *Hand Delivery:* To make special arrangements for hand delivery or delivery of boxed information, please follow the instructions at *http://www.epa.gov/dockets/contacts.html.*

Additional instructions on commenting or visiting the docket, along with more information about dockets generally, is available at *http://www.epa.gov/dockets.*

II. Summary of Proposed Rule-For Exemption

In the **Federal Register** of May 22, 2020 (85 FR 31130) (FRL–10008–87), EPA proposed to exempt residues of the antimicrobial pesticide ingredients dipropylene glycol and triethylene glycol from the requirement of a tolerance when used on or applied to food-contact surfaces in public eating places, dairy-processing equipment, and food-processing equipment and utensils. These exemptions were proposed on the Agency's own initiative under section 408(e) of the FFDCA. 21 U.S.C. 346a(e). No comments were submitted on the Agency's proposal. Therefore, the Agency is finalizing the exemption from the requirement of a tolerance for residues of the antimicrobial pesticide ingredients dipropylene glycol and triethylene glycol when used on or applied to food-contact surfaces in public eating places, dairy-processing equipment, and food-processing equipment and utensils as proposed.

III. Aggregate Risk Assessment and Determination of Safety

Section 408(c)(2)(A)(i) of FFDCA allows EPA to establish an exemption from the requirement for a tolerance (the legal limit for a pesticide chemical residue in or on a food) only if EPA determines that the exemption is ''safe.'' Section 408(c)(2)(A)(ii) of FFDCA defines ''safe'' to mean that ''there is a reasonable certainty that no harm will result from aggregate exposure to the pesticide chemical residue, including all anticipated dietary exposures and all other exposures for which there is reliable information.'' This includes exposure through drinking water and in residential settings but does not include occupational exposure. Pursuant to FFDCA section 408(c)(2)(B), in establishing or maintaining in effect an exemption from the requirement of a tolerance, EPA must take into account the factors set forth in FFDCA section 408(b)(2)(C), which requires EPA to give special consideration to exposure of infants and children to the pesticide chemical residue in establishing a tolerance and to ''ensure that there is a reasonable certainty that no harm will result to infants and children from aggregate exposure to the pesticide chemical residue . . . .''

Consistent with FFDCA section 408(c)(2)(A) and the factors specified in FFDCA section 408(c)(2)(B), EPA has reviewed the available scientific data and other relevant information in support of this action. EPA has sufficient data to assess the hazards of and to make a determination on aggregate exposure for dipropylene glycol and triethylene glycol including exposure resulting from the exemption established by this action. EPA's assessment of exposures and risks associated with dipropylene glycol and triethylene glycol are discussed in the preamble to the proposed rule.

Based on the toxicological and exposure data discussed in the proposal and the supporting registration review documents, EPA concludes that the exemption from the requirement of a tolerance for residues of dipropylene glycol and triethylene glycol when used in antimicrobial formulations applied to food-contact surfaces in public eating places, dairy-processing equipment, and food-processing equipment and utensils will be safe. EPA has determined that there is a reasonable certainty that no harm will result to the general population, or to infants and children, from aggregate exposure to dipropylene glycol and triethylene glycol residues.

IV. Analytical Enforcement Methodology

An analytical method for residue is not needed. Due to the lack of risk, EPA is establishing exemptions without limits for dipropylene glycol and triethylene glycol; therefore, measuring residues of dipropylene glycol and triethylene glycol is not necessary.

V. Conclusion

Therefore, EPA is establishing in 40 CFR 180.940(a) exemptions from the requirement of a tolerance for residues of dipropylene glycol and triethylene glycol when used in antimicrobial formulations applied to food-contact surfaces in public eating places, dairy-processing equipment, and food-processing equipment and utensils.

VI. Statutory and Executive Order Reviews

This action establishes exemptions from the requirement of a tolerance under FFDCA section 408(e). The Office of Management and Budget (OMB) has exempted these types of actions from review under Executive Order 12866, entitled ''Regulatory Planning and Review'' (58 FR 51735, October 4, 1993). Because this action has been exempted from review under Executive Order 12866, this action is not subject to Executive Order 13211, entitled

''Actions Concerning Regulations That Significantly Affect Energy Supply, Distribution, or Use'' (66 FR 28355, May 22, 2001) or Executive Order 13045, entitled ''Protection of Children from Environmental Health Risks and Safety Risks'' (62 FR 19885, April 23, 1997), nor is it considered a regulatory action under Executive Order 13771, entitled ''Reducing Regulations and Controlling Regulatory Costs'' (82 FR 9339, February 3, 2017). This action does not contain any information collections subject to OMB approval under the Paperwork Reduction Act (PRA) (44 U.S.C. 3501 *et seq.*), nor does it require any special considerations under Executive Order 12898, entitled ''Federal Actions to Address Environmental Justice in Minority Populations and Low-Income Populations'' (59 FR 7629, February 16, 1994).

Pursuant to the Regulatory Flexibility Act (RFA) (5 U.S.C. 601 *et seq.*), the Agency previously assessed whether establishment of exemptions from the requirement of a tolerance might significantly impact a substantial number of small entities and concluded that, as a general matter, these actions do not impose a significant economic impact on a substantial number of small entities. This analysis for tolerance establishments and modifications was published in the **Federal Register** of May 4, 1981 (46 FR 24950) and was provided to the Chief Counsel for Advocacy of the Small Business Administration. Taking into account this analysis, and available information concerning the pesticides listed in this rule, the Agency hereby certifies that this proposed rule will not have a significant negative economic impact on a substantial number of small entities. Furthermore, for the pesticides named in this rule, the Agency knows of no extraordinary circumstances that exist as to the present rule that would change EPA's previous analysis. No comments were submitted concerning EPA's similar determination in the proposed rule.

This action directly regulates growers, food processors, food handlers, and food retailers, not States or tribes, nor does this action alter the relationships or distribution of power and responsibilities established by Congress in the preemption provisions of FFDCA section 408(n)(4). As such, the Agency has determined that this action will not have a substantial direct effect on States or tribal governments, on the relationship between the national government and the States or tribal governments, or on the distribution of power and responsibilities among the various levels of government or between the Federal Government and Indian tribes. Thus, the Agency has determined that Executive Order 13132, entitled ''Federalism'' (64 FR 43255, August 10, 1999) and Executive Order 13175, entitled ''Consultation and Coordination with Indian Tribal Governments'' (65 FR 67249, November 9, 2000) do not apply to this action. In addition, this action does not impose any enforceable duty or contain any unfunded mandate as described under Title II of the Unfunded Mandates Reform Act (UMRA) (2 U.S.C. 1501 *et seq.*).

This action does not involve any technical standards that would require Agency consideration of voluntary consensus standards pursuant to section 12(d) of the National Technology Transfer and Advancement Act (NTTAA) (15 U.S.C. 272 note).

VII. Congressional Review Act

Pursuant to the Congressional Review Act (5 U.S.C. 801 *et seq.*), EPA will submit a report containing this rule and other required information to the U.S. Senate, the U.S. House of Representatives, and the Comptroller General of the United States prior to publication of the rule in the **Federal Register**. This action is not a ''major rule'' as defined by 5 U.S.C. 804(2).

List of Subjects in 40 CFR Part 180

Environmental protection, Administrative practice and procedure, Agricultural commodities, Pesticides and pests, Reporting and recordkeeping requirements.

Edward Messina,

Acting Director, Office of Pesticide Programs.

Therefore, for the reasons stated in the preamble, the EPA amends 40 CFR chapter I as follows:

PART 180—TOLERANCES AND EXEMPTIONS FOR PESTICIDE CHEMICAL RESIDUES IN FOOD

■ 1. The authority citation for part 180 continues to read as follows:

Authority: 21 U.S.C. 321(q), 346a and 371.

■ 2. In § 180.940 amend paragraph (a) by adding to the table, in alphabetical order, the entries of ''Dipropylene glycol'' and ''Triethylene glycol'' to read as follows:

§ 180.940 Tolerance exemptions for active and inert ingredients for use in antimicrobial formulations (Food-contact surface sanitizing solutions).

* * * * *

(a) * * *

TABLE 180.940(a)

Pesticide chemical	CAS Reg. No.	Limits
* * * * *	*	*
Dipropylene glycol	25265–71–8	None.
* * * * *	*	*
Triethylene glycol	112–27–6	None.
* * * * *	*	*

* * * * *

[FR Doc. 2020–23199 Filed 11–2–20; 8:45 am]

BILLING CODE 6560–50–P

FEDERAL COMMUNICATIONS COMMISSION

47 CFR Parts 2, 90, and 97

[WT Docket No. 19–348; FCC 20–138; FRS 17120]

Facilitating Shared Use in the 3100–3550 MHz Band

AGENCY: Federal Communications Commission.

ACTION: Final rule; correction.

SUMMARY: The Federal Communications Commission is correcting a final that appeared in the **Federal Register** on October 9, 2020. In the document, the Commission adopts changes to its rules to prepare the 3.45–3.55 GHz band for commercial wireless services. It removes the secondary, non-federal allocations in the 3.3–3.55 GHz band for radiolocation services and the amateur radio service. These services will continue in alternate spectrum; radiolocation operations will be moved to the 2.9–3.0 GHz band, already home to similar operations, and amateur licensees will be able to relocate their operations to other frequencies already available for amateur operations. Clearing this band of secondary services will allow the Commission to auction the 3.45–3.55 GHz band for commercial wireless services on a co-primary basis with federal radio navigation and radiolocation operations.

DATES: *Effective:* November 9, 2020.

FOR FURTHER INFORMATION CONTACT: Joyce Jones, Wireless Telecommunications Bureau, Mobility Division, (202) 418–1327 or *joyce.jones@fcc.gov,* or Ira Keltz, Office of Engineering and Technology, (202) 418–0616 or *ira.keltz@fcc.gov.*

SUPPLEMENTARY INFORMATION: In FR Doc 2020–22528 appearing on page 64068 in the **Federal Register** of October 9, 2020, the following corrections are made:

§ 97.209 [Corrected]

■ On page 64068 the instruction ''Amend § 97.209 by revising paragraph (b)(9) to read as follows:'' Is corrected to read ''Amend § 97.209 by revising paragraph (b)(2) to read as follows:''

Federal Communications Commission.

Marlene Dortch

Secretary, Office of the Secretary.

[FR Doc. 2020–23209 Filed 11–2–20; 8:45 am]

BILLING CODE 6712–01–P

DEPARTMENT OF COMMERCE

National Oceanic and Atmospheric Administration

50 CFR Part 216

[Docket No. 201023–0279]

RIN 0648–BK06

Modification of Deadlines Under the Fish and Fish Product Import Provisions of the Marine Mammal Protection Act

AGENCY: National Marine Fisheries Service (NMFS), National Oceanic and Atmospheric Administration (NOAA), Commerce.

ACTION: Interim final rule; request for comments.

SUMMARY: NMFS issues this interim final rule to revise the regulations implementing the import provisions of the Marine Mammal Protection Act (MMPA). This interim final rule extends, by one year, the five-year exemption period to end December 31, 2022, and changes the deadline for comparability finding applications from March 1 of the year of expiration of a comparability finding to November 30 of the year prior to the expiration of a comparability finding, moving the comparability finding application deadline to November 30, 2021.

DATES: This interim final rule is effective November 3, 2020. Written comments must be received by 5 p.m. Eastern Time on December 3, 2020.

ADDRESSES: You may submit comments on this document, identified by NOAA–NMFS–2020–0127, by the following methods:

(1) *Electronic Submissions:* Submit all electronic public comments via the Federal e-Rulemaking Portal at *http://www.regulations.gov.* Go to the URL *http://www.regulations.gov/#!docketDetail;D=NOAA-NMFS-2020-0127,* and click the ''Comment Now!'' icon, complete the required fields and enter or attach your comments.

Instructions: Comments sent by any other method, to any other address or individual, or received after the end of the comment period, may not be considered. All comments received are a part of the public record and will generally be posted for public viewing on *http://www.regulations.gov* without change. All personal identifying information (*e.g.,* name, address, etc.), confidential business information, or otherwise sensitive information submitted voluntarily by the sender will be publicly accessible. NMFS will accept anonymous comments (enter ''N/A'' in the required fields if you wish to remain anonymous).

Anyone who is unable to comment through *http://www.regulations.gov* may contact the **FOR FURTHER INFORMATION CONTACT** below to discuss potential alternatives for submitting comments.

FOR FURTHER INFORMATION CONTACT: Nina Young, Office of International Affairs and Seafood Inspection, NMFS at *Nina.Young@noaa.gov* or 301–427–8383.

SUPPLEMENTARY INFORMATION:

Background

In August 2016, NMFS published a final rule (81 FR 54390; August 15, 2016) implementing the fish and fish product import provisions (section 101(a)(2)) of the MMPA (hereafter referred to as the MMPA Import Provisions), which prohibit the import of fish or fish products from commercial fishing operations that result in the incidental mortality or serious injury of marine mammals in excess of United States standards. Specifically, this rule established conditions for evaluating a harvesting nation's regulatory programs to address incidental and intentional mortality and serious injury of marine mammals in its fisheries producing fish and fish products exported to the United States. Fish and fish products from export and exempt fisheries identified by the Assistant Administrator for Fisheries in the List of Foreign (LOFF) can only be imported into the United States if the harvesting nation has applied for and received a Comparability Finding from NMFS. The 2016 final rule established procedures that a harvesting nation must follow and conditions it must meet to receive a Comparability Finding for a fishery. The rule also established provisions for intermediary nations to ensure that such nations do not import and re-export to the United States fish or fish products that are subject to an import prohibition.

Exemption Period

Under the MMPA Import Provisions, NMFS established an initial five-year exemption period similar to the Interim Exemption for domestic fisheries that occurred in 1988 prior to implementation of the framework for addressing marine mammal bycatch in U.S. commercial fisheries. Currently, the exemption period expires December 31, 2021. This interim final rule would extend the exemption period one year to end December 31, 2022. During the exemption period, the prohibitions of the MMPA Import Provisions do not apply to imports from the harvesting nation. NMFS established the five-year

exemption period to provide nations with adequate time to assess marine mammal stocks, estimate bycatch, and develop regulatory programs to mitigate that bycatch.

NMFS is extending the exemption period by one year. This change is warranted because foreign nations have experienced delays or interruptions in the implementation of programs to comply with the MMPA Import Provisions because of the coronavirus pandemic. Necessary diversion of resources in response to the pandemic has resulted in significant disruptions to foreign government operations for nearly every nation exporting seafood products to the United States. These disruptions included inability to access government buildings, lack of telework capabilities, and inability to access data requested to meet the MMPA Import Provisions benchmarks. Additionally, legislative processes were suspended or postponed in some nations, preventing the adoption of laws aimed at implementing regulatory provisions necessary for nations to develop regulatory programs comparable in effectiveness to the U.S. regulatory program. There were also disruptions to scientific research cruises, fishery observer or bycatch monitoring programs, and experimental trials to develop marine mammal bycatch mitigation devices.

The rate of response by nations also declined during 2020. In 2019, 96 out of approximately 130 trading partners submitted progress reports in compliance with the MMPA Import Provisions. In 2020, only 85 nations submitted updates to their LOFF. Approximately 55 nations (or economies) did not update the information in their LOFF.[1] More than 17 nations requested that the deadline for the submission of updates to their LOFF be extended or expressed concern about being able to meet the deadline due to operational disruptions attributable to the pandemic. For the 55 nations that did not respond, we cannot determine if extenuating circumstances affected their ability to update their LOFF. Given these impacts, providing nations with additional time to implement the MMPA Import Provisions will result in fewer disruptions to international seafood trade and a more predictable impact to U.S. seafood wholesalers and retailers when the regulation enters into full effect.

[1] See 85 FR 22290, October 8, 2020 for a list of nations.

Modification to the Deadline for Comparability Finding Applications

The MMPA Import Provisions establish March 1st of the year when the ''exemption period or comparability finding is to expire'' as the deadline by which a harvesting nation must submit to the Assistant Administrator an application for each of its export and exempt fisheries. This application requires the nation to submit documentary evidence demonstrating that the harvesting nation has met the conditions specified in the MMPA Import Provisions to receive a comparability finding, including reasonable proof as to the effects on marine mammals of the commercial fishing technology in use in the fishery for fish or fish products exported from such nation to the United States.

According to the MMPA Import Provisions, NMFS must conduct comparability findings for all 953 exempt and 1,852 export fisheries on the LOFF. For exempt fisheries, the nation need only demonstrate that they prohibit the intentional mortality or serious injury of marine mammals in the course of commercial fishing operations or have procedures to reliably certify that exports of fish and fish products to the United States are not the product of an intentional killing or serious injury of a marine mammal. For export fisheries, NMFS must undertake a detailed evaluation of the regulatory program governing that fishery and determine whether that program is comparable in effectiveness to the U.S. regulatory program. Currently, the MMPA Import Provisions provide NMFS only eight months from the submission of the comparability finding application to the publication of the **Federal Register** notice to identify which nations and fisheries have either received or been denied a Comparability Finding and, if denied, the import restrictions associated with those fisheries. Based on NMFS' recent experience reviewing, issuing, and revoking Comparability Findings for certain fisheries of Mexico, this amount of time is insufficient given the number of export fisheries that must be evaluated. By this interim final rule, NMFS would change the deadline for submission of comparability finding applications from March 1 of the year when the exemption period or comparability finding is to expire to November 30 of the preceding year. As a result, the original comparability finding application deadline of March 1, 2021, would move to November 30, 2021, with this interim final rule's extension of the exemption period to December 31, 2022.

Classification

This rule is published under the authority of the Marine Mammal Protection Act, 16 U.S.C. 1371. The NMFS Assistant Administrator has determined that this interim final rule is consistent with the Marine Mammal Protection Act and other applicable laws. Under NOAA Administrative Order (NAO 216–6), the promulgation of regulations that are procedural and administrative in nature are categorically excluded from the requirement to prepare an Environmental Assessment.

Administrative Procedure Act

NOAA finds good cause to issue this interim final rule to extend the exemption period and revise the deadline for applications without advance notice in a proposed rule or the prior opportunity for public comment, and to make the rule effective immediately without providing a 30-day delay, because of the need to provide exporting nations with sufficient advance notice of the additional time to submit their comparability finding applications. Currently nations must submit their comparability finding applications in a few months by March 1, 2021. Advance notice and prior opportunity for comment, or delayed effectiveness, would not serve the purposes of the extension and would be contrary to the public interest, requiring exporting nations submit incomplete comparability finding applications without sufficient time. This interim final rule extends the comparability finding application deadline until November 30, 2021, and the exemption period until December 31, 2022. These extensions give exporting nations time to gather the needed information and data during the pandemic crisis. Furthermore, any delay in notifying exporting nations may adversely affect U.S. trade. However, NMFS is requesting public comments on this interim final rule and will consider whether any changes are warranted when issuing a final rule.

Executive Order 12866

This interim final rule has been determined to be not significant for purposes of Executive Order 12866.

Paperwork Reduction Act

This interim final rule contains no new or revised collection-of-information requirements subject to the Paperwork Reduction Act.

List of Subjects in 50 CFR Part 216

Administrative practice and procedure, Exports, Marine Mammals, Reporting and recordkeeping requirements.

Dated: October 26, 2020.

Paul N. Doremus,

Deputy Assistant Administrator for Operations, National Marine Fisheries Service.

For the reasons set out in the preamble, 50 CFR part 216 is amended as follows:

PART 216—REGULATIONS GOVERNING THE TAKING AND IMPORTING OF MARINE MAMMALS

■ 1. The authority citation for part 216 continues to read as follows:

Authority: 16 U.S.C. 1361 *et seq.*

■ 2. In § 216.3, revise the definition for ''Exemption period'' to read as follows:

§ 216.3 Definitions.

* * * * *

Exemption period means the one-time, six-year period that commences January 1, 2017 and ends December 31, 2022, during which commercial fishing operations that are the source of exports of commercial fish and fish products to the United States will be exempt from the prohibitions of § 216.24(h)(1).

* * * * *

■ 3. In § 216.24, paragraphs (h)(6)(i) and (h)(8)(v) are revised to read as follows:

§ 216.24 Taking and related acts in commercial fishing operations including tuna purse seine vessels in the eastern tropical Pacific Ocean.

* * * * *

(h) * * *

(6) * * *

(i) *Procedures to apply for a comparability finding.* On November 30 of the year prior to when the exemption period or comparability finding is to expire, a harvesting nation, shall submit to the Assistant Administrator an application for each of its export and exempt fisheries, along with documentary evidence demonstrating that the harvesting nation has met the conditions specified in paragraph (h)(6)(iii) of this section for each of such fisheries, including reasonable proof as to the effects on marine mammals of the commercial fishing technology in use in the fishery for fish or fish products exported from such nation to the United States. The Assistant Administrator may require the submission of additional supporting documentation or other verification of statements made in an application for a comparability finding.

* * * * *

(8) * * *

(v) *Renewal of comparability finding.* To seek renewal of a comparability finding, every 4 years or prior to the expiration of a comparability finding, the harvesting nation must submit to the Assistant Administrator the application and the documentary evidence required pursuant to paragraph (h)(6)(i) of this section, including, where applicable, reasonable proof as to the effects on marine mammals of the commercial fishing technology in use in the fishery for fish or fish products exported to the United States, by November 30 of the year prior to the expiration date of its current comparability finding.

* * * * *

[FR Doc. 2020–24210 Filed 11–2–20; 8:45 am]

BILLING CODE 3510–22–P

DEPARTMENT OF COMMERCE

National Oceanic and Atmospheric Administration

50 CFR Part 679

[Docket No. 200221–0062; RTID 0648–XA601]

Fisheries of the Exclusive Economic Zone Off Alaska; Exchange of Flatfish in the Bering Sea and Aleutian Islands Management Area

AGENCY: National Marine Fisheries Service (NMFS), National Oceanic and Atmospheric Administration (NOAA), Commerce.

ACTION: Temporary rule; reallocation.

SUMMARY: NMFS is exchanging allocations of Amendment 80 cooperative quota (CQ) for Amendment 80 acceptable biological catch (ABC) reserves. This action is necessary to allow the 2020 total allowable catch (TAC) of flathead sole, rock sole, and yellowfin sole in the Bering Sea and Aleutian Islands management area (BSAI) to be harvested.

DATES: Effective November 2, 2020, through December 31, 2020.

FOR FURTHER INFORMATION CONTACT: Steve Whitney, 907–586–7228.

SUPPLEMENTARY INFORMATION: NMFS manages the groundfish fishery in the BSAI according to the Fishery Management Plan for Groundfish of the Bering Sea and Aleutian Islands Management Area (FMP) prepared by the North Pacific Fishery Management Council under authority of the Magnuson-Stevens Fishery Conservation and Management Act. Regulations governing fishing by U.S. vessels in accordance with the FMP appear at subpart H of 50 CFR part 600 and 50 CFR part 679.

The 2020 flathead sole, rock sole, and yellowfin sole Amendment 80 allocations of the TAC specified in the BSAI are 12,884 metric tons (mt), 36,090 mt, and 114,903 mt, respectively, as established by the final 2020 and 2021 harvest specifications for groundfish in the BSAI (85 FR 13553, March 9, 2020) and as revised (85 FR 64413, October 13, 2020). The 2020 flathead sole, rock sole, and yellowfin sole Amendment 80 ABC reserves are 44,960 mt, 94,807 mt, and 96,895 mt, respectively, as established by the final 2020 and 2021 harvest specifications for groundfish in the BSAI (85 FR 13553, March 9, 2020) and as revised (85 FR 64413, October 13, 2020).

The Alaska Seafood Cooperative has requested that NMFS exchange 1,191 mt of flathead sole and 4,527 mt of rock sole Amendment 80 allocation of the TAC for 5,718 mt of yellowfin sole Amendment 80 ABC reserves under § 679.91(i). Therefore, in accordance with § 679.91(i), NMFS exchanges 1,191 mt of flathead sole and 4,527 mt of rock sole Amendment 80 allocation of the TAC for 5,718 mt of yellowfin sole Amendment 80 ABC reserves in the BSAI. This action also decreases and increases the TACs and Amendment 80 ABC reserves by the corresponding amounts. Tables 11 and 13 of the final 2020 and 2021 harvest specifications for groundfish in the BSAI (85 FR 13553, March 9, 2020) and as revised (85 FR 64413, October 13, 2020) are further revised as follows:

TABLE 11—FINAL 2020 COMMUNITY DEVELOPMENT QUOTA (CDQ) RESERVES, INCIDENTAL CATCH AMOUNTS (ICAS), AND AMENDMENT 80 ALLOCATIONS OF THE ALEUTIAN ISLANDS PACIFIC OCEAN PERCH, AND BSAI FLATHEAD SOLE, ROCK SOLE, AND YELLOWFIN SOLE TACS

[Amounts are in metric tons]

Sector	Pacific ocean perch			Flathead sole	Rock sole	Yellowfin sole
	Eastern Aleutian district	Central Aleutian district	Western Aleutian district	BSAI	BSAI	BSAI
TAC	10,613	8,094	10,000	16,654	42,178	158,518
CDQ	1,136	866	1,070	1,962	4,615	16,725
ICA	100	60	10	3,000	6,000	4,000
BSAI trawl limited access	938	717	178	.....	.....	17,172
Amendment 80	8,440	6,451	8,742	11,693	31,563	120,621

Note: Sector apportionments may not total precisely due to rounding.

TABLE 13—FINAL 2020 AND 2021 ABC SURPLUS, ABC RESERVES, COMMUNITY DEVELOPMENT QUOTA (CDQ) ABC RESERVES, AND AMENDMENT 80 ABC RESERVES IN THE BSAI FOR FLATHEAD SOLE, ROCK SOLE, AND YELLOWFIN SOLE

[Amounts are in metric tons]

Sector	2020 Flathead sole	2020 Rock sole	2020 Yellowfin sole	2021 [1] Flathead sole	2021 [1] Rock sole	2021 [1] Yellowfin sole
ABC	68,134	153,300	260,918	71,079	230,700	261,497
TAC	16,654	42,128	158,548	24,000	49,000	168,900
ABC surplus	51,480	111,172	102,370	47,079	181,700	92,597
ABC reserve	51,480	111,172	102,370	47,079	181,700	92,597
CDQ ABC reserve	5,329	11,838	11,193	5,037	19,442	9,908
Amendment 80 ABC reserve	46,151	99,334	91,177	42,042	162,258	82,689

[1] The 2021 allocations for Amendment 80 species between Amendment 80 cooperatives and the Amendment 80 limited access sector will not be known until eligible participants apply for participation in the program by November 1, 2020.

Classification

NMFS issues this action pursuant to section 305(d) of the Magnuson-Stevens Act. This action is required by 50 CFR part 679, which was issued pursuant to section 304(b), and is exempt from review under Executive Order 12866.

Pursuant to 5 U.S.C. 553(b)(B), there is good cause to waive prior notice and an opportunity for public comment on this action, as notice and comment would be impracticable and contrary to the public interest, as it would prevent NMFS from responding to the most recent fisheries data in a timely fashion and would delay the flatfish exchange by the Alaska Seafood Cooperative in the BSAI. NMFS was unable to publish a notice providing time for public comment because the most recent, relevant data only became available as of October 21, 2020.

Authority: 16 U.S.C. 1801 *et seq.*

Dated: October 28, 2020.

Jennifer M. Wallace,

Acting Director, Office of Sustainable Fisheries, National Marine Fisheries Service.

[FR Doc. 2020–24250 Filed 11–2–20; 8:45 am]

BILLING CODE 3510–22–P

Proposed Rules

Federal Register
Vol. 85, No. 213
Tuesday, November 3, 2020

This section of the FEDERAL REGISTER contains notices to the public of the proposed issuance of rules and regulations. The purpose of these notices is to give interested persons an opportunity to participate in the rule making prior to the adoption of the final rules.

DEPARTMENT OF TRANSPORTATION

Federal Aviation Administration

14 CFR Part 39

[Docket No. FAA–2020–0980; Product Identifier 2020–NM–094–AD]

RIN 2120–AA64

Airworthiness Directives; Dassault Aviation Airplanes

AGENCY: Federal Aviation Administration (FAA), DOT.

ACTION: Notice of proposed rulemaking (NPRM).

SUMMARY: The FAA proposes to supersede Airworthiness Directive (AD) 2020–02–21, which applies to all Dassault Aviation Model FALCON 2000 airplanes. AD 2020–02–21 requires revising the existing maintenance or inspection program, as applicable, to incorporate new or more restrictive and airworthiness limitations. Since the FAA issued AD 2020–02–21, the FAA has determined that new or more restrictive airworthiness limitations are necessary. This proposed AD would require revising the existing maintenance or inspection program, as applicable, to incorporate new or more restrictive airworthiness limitations, as specified in a European Union Aviation Safety Agency (EASA) AD, which will be incorporated by reference. The FAA is proposing this AD to address the unsafe condition on these products.

DATES: The FAA must receive comments on this proposed AD by December 18, 2020.

ADDRESSES: You may send comments, using the procedures found in 14 CFR 11.43 and 11.45, by any of the following methods:

- *Federal eRulemaking Portal:* Go to *https://www.regulations.gov.* Follow the instructions for submitting comments.
- *Fax:* 202–493–2251.
- *Mail:* U.S. Department of Transportation, Docket Operations, M–30, West Building Ground Floor, Room W12–140, 1200 New Jersey Avenue SE, Washington, DC 20590.
- *Hand Delivery:* Deliver to Mail address above between 9 a.m. and 5 p.m., Monday through Friday, except Federal holidays.

For EASA material that will be incorporated by reference (IBR) in this AD, contact the EASA, Konrad-Adenauer-Ufer 3, 50668 Cologne, Germany; telephone +49 221 8999 000; email *ADs@easa.europa.eu;* internet *www.easa.europa.eu.* You may find this IBR material on the EASA website at *https://ad.easa.europa.eu.* For Dassault Aviation service information identified in this proposed AD, contact Dassault Falcon Jet Corporation, Teterboro Airport, P.O. Box 2000, South Hackensack, NJ 07606; telephone 201–440–6700; internet *https://www.dassaultfalcon.com.* You may view this IBR material at the FAA, Airworthiness Products Section, Operational Safety Branch, 2200 South 216th St., Des Moines, WA. For information on the availability of this material at the FAA, call 206–231–3195. It is also available in the AD docket on the internet at *https://www.regulations.gov* by searching for and locating Docket No. FAA–2020–0980.

Examining the AD Docket

You may examine the AD docket on the internet at *https://www.regulations.gov* by searching for and locating Docket No. FAA–2020–0980; or in person at Docket Operations between 9 a.m. and 5 p.m., Monday through Friday, except Federal holidays. The AD docket contains this NPRM, any comments received, and other information. The street address for Docket Operations is listed above. Comments will be available in the AD docket shortly after receipt.

FOR FURTHER INFORMATION CONTACT: Tom Rodriguez, Aerospace Engineer, Large Aircraft Section, International Validation Branch, FAA, 2200 South 216th St., Des Moines, WA 98198; telephone and fax 206–231–3226; email *tom.rodriguez@faa.gov.*

SUPPLEMENTARY INFORMATION:

Comments Invited

The FAA invites you to send any written relevant data, views, or arguments about this proposal. Send your comments to an address listed under **ADDRESSES**. Include ''Docket No. FAA–2020–0980; Product Identifier 2020–NM–094–AD'' at the beginning of your comments. The most helpful comments reference a specific portion of the proposal, explain the reason for any recommended change, and include supporting data. The FAA will consider all comments received by the closing date and may amend the proposal because of those comments.

Except for Confidential Business Information (CBI) as described in the following paragraph, and other information as described in 14 CFR 11.35, the FAA will post all comments received, without change, to *https://www.regulations.gov,* including any personal information you provide. The agency will also post a report summarizing each substantive verbal contact received about this proposed AD.

Confidential Business Information

CBI is commercial or financial information that is both customarily and actually treated as private by its owner. Under the Freedom of Information Act (FOIA) (5 U.S.C. 552), CBI is exempt from public disclosure. If your comments responsive to this NPRM contain commercial or financial information that is customarily treated as private, that you actually treat as private, and that is relevant or responsive to this NPRM, it is important that you clearly designate the submitted comments as CBI. Please mark each page of your submission containing CBI as ''PROPIN.'' The FAA will treat such marked submissions as confidential under the FOIA, and they will not be placed in the public docket of this NPRM. Submissions containing CBI should be sent to Tom Rodriguez, Aerospace Engineer, Large Aircraft Section, International Validation Branch, FAA, 2200 South 216th St., Des Moines, WA 98198; telephone and fax 206–231–3226; email *tom.rodriguez@faa.gov.* Any commentary that the FAA receives which is not specifically designated as CBI will be placed in the public docket for this rulemaking.

Discussion

The FAA issued AD 2020–02–21, Amendment 39–19833 (85 FR 7860, February 12, 2020) (''AD 2020–02–21''), for all Dassault Aviation Model FALCON 2000 airplanes. AD 2020–02–21 requires revising the existing

maintenance or inspection program, as applicable, to incorporate new or more restrictive airworthiness limitations. The FAA issued AD 2020–02–21 to address reduced controllability of the airplane. AD 2020–02–21 specifies that accomplishing the revision required by paragraph (g) or (i) of that AD terminates the requirements of paragraph (g) of AD 2010–26–05, Amendment 39–16544 (75 FR 79952, December 21, 2010), for Model FALCON 2000 airplanes.

Actions Since AD 2020–02–21 Was Issued

Since the FAA issued AD 2020–02–21, the FAA has determined that new or more restrictive airworthiness limitations are necessary.

The EASA, which is the Technical Agent for the Member States of the European Union, has issued EASA AD 2020–0113, dated May 20, 2020 (''EASA AD 2020–0113'') (also referred to as the Mandatory Continuing Airworthiness Information, or ''the MCAI''), to correct an unsafe condition for all Dassault Aviation Model FALCON 2000 airplanes.

This proposed AD was prompted by a determination that new or more restrictive airworthiness limitations are necessary. The FAA is proposing this AD to address reduced controllability of the airplane. See the MCAI for additional background information.

Related Service Information Under 1 CFR Part 51

EASA AD 2020–0113 describes new or more restrictive airworthiness limitations for airplane structures and safe life limits.

This proposed AD would also require Chapter 5–40, Airworthiness Limitations, Revision 20, dated November 2018, of the Dassault Aviation Falcon 2000 Maintenance Manual, which the Director of the Federal Register approved for incorporation by reference as of March 18, 2020 (85 FR 7860, February 12, 2020).

This material is reasonably available because the interested parties have access to it through their normal course of business or by the means identified in the **ADDRESSES** section.

FAA's Determination and Requirements of This Proposed AD

This product has been approved by the aviation authority of another country, and is approved for operation in the United States. Pursuant to the FAA's bilateral agreement with the State of Design Authority, the FAA has been notified of the unsafe condition described in the MCAI and service information referenced above. The FAA is proposing this AD because the FAA has evaluated all pertinent information and determined an unsafe condition exists and is likely to exist or develop on other products of the same type design.

Proposed AD Requirements

This proposed AD would retain the requirements of AD 2020–02–21. This proposed AD would also require revising the existing maintenance or inspection program, as applicable, to incorporate new or more restrictive airworthiness limitations which are specified in EASA AD 2020–0113 described previously, as incorporated by reference. Any differences with EASA AD 2020–0113 are identified as exceptions in the regulatory text of this AD.

This proposed AD would require revisions to certain operator maintenance documents to include new actions (*e.g.,* inspections). Compliance with these actions is required by 14 CFR 91.403(c). For airplanes that have been previously modified, altered, or repaired in the areas addressed by this proposed AD, the operator may not be able to accomplish the actions described in the revisions. In this situation, to comply with 14 CFR 91.403(c), the operator must request approval for an alternative method of compliance according to paragraph (m)(1) of this proposed AD.

Explanation of Required Compliance Information

In the FAA's ongoing efforts to improve the efficiency of the AD process, the FAA initially worked with Airbus and EASA to develop a process to use certain EASA ADs as the primary source of information for compliance with requirements for corresponding FAA ADs. The FAA has since coordinated with other manufacturers and civil aviation authorities (CAAs) to use this process. As a result, EASA AD 2020–0113 will be incorporated by reference in the FAA final rule. This proposed AD would, therefore, require compliance with EASA AD 2020–0113 in its entirety, through that incorporation, except for any differences identified as exceptions in the regulatory text of this proposed AD. Using common terms that are the same as the heading of a particular section in the EASA AD does not mean that operators need comply only with that section. For example, where the AD requirement refers to ''all required actions and compliance times,'' compliance with this AD requirement is not limited to the section titled ''Required Action(s) and Compliance Time(s)'' in the EASA AD.

Service information specified in EASA AD 2020–0113 that is required for compliance with EASA AD 2020–0113 will be available on the internet at *https://www.regulations.gov* by searching for and locating Docket No. FAA–2020–0980 after the FAA final rule is published.

Airworthiness Limitation ADs Using the New Process

The FAA's process of incorporating by reference MCAI ADs as the primary source of information for compliance with corresponding FAA ADs has been limited to certain MCAI ADs (primarily those with service bulletins as the primary source of information for accomplishing the actions required by the FAA AD). However, the FAA is now expanding the process to include MCAI ADs that require a change to airworthiness limitation documents, such as airworthiness limitation sections.

For these ADs that incorporate by reference an MCAI AD that changes airworthiness limitations, the FAA requirements are unchanged. Operators must revise the existing maintenance or inspection program, as applicable, to incorporate the information specified in the new airworthiness limitation document. The airworthiness limitations must be followed according to 14 CFR 91.403(c) and 91.409(e).

The previous format of the airworthiness limitation ADs included a paragraph that specified that no alternative actions (*e.g.,* inspections) or intervals may be used unless the actions or intervals are approved as an alternative method of compliance (AMOC) in accordance with the procedures specified in the AMOCs paragraph under ''Other FAA Provisions.'' This new format includes a ''New Provisions for Alternative Actions and Intervals'' paragraph that does not specifically refer to AMOCs, but operators may still request an AMOC to use an alternative action or interval.

Costs of Compliance

The FAA estimates that this proposed AD affects 168 airplanes of U.S. registry. The FAA estimates the following costs to comply with this proposed AD:

The FAA estimates the total cost per operator for the retained actions from AD 2020–02–21 to be $7,650 (90 work-hours × $85 per work-hour).

The FAA has determined that revising the existing maintenance or inspection program takes an average of 90 work-hours per operator, although the agency recognizes that this number may vary

from operator to operator. In the past, the agency has estimated that this action takes 1 work-hour per airplane. Since operators incorporate maintenance or inspection program changes for their affected fleet(s), the FAA has determined that a per-operator estimate is more accurate than a per-airplane estimate.

The FAA estimates the total cost per operator for the new proposed actions to be $7,650 (90 work-hours × $85 per work-hour).

Authority for This Rulemaking

Title 49 of the United States Code specifies the FAA's authority to issue rules on aviation safety. Subtitle I, section 106, describes the authority of the FAA Administrator. Subtitle VII: Aviation Programs, describes in more detail the scope of the Agency's authority.

The FAA is issuing this rulemaking under the authority described in Subtitle VII, Part A, Subpart III, Section 44701: General requirements. Under that section, Congress charges the FAA with promoting safe flight of civil aircraft in air commerce by prescribing regulations for practices, methods, and procedures the Administrator finds necessary for safety in air commerce. This regulation is within the scope of that authority because it addresses an unsafe condition that is likely to exist or develop on products identified in this rulemaking action.

Regulatory Findings

The FAA determined that this proposed AD would not have federalism implications under Executive Order 13132. This proposed AD would not have a substantial direct effect on the States, on the relationship between the national Government and the States, or on the distribution of power and responsibilities among the various levels of government.

For the reasons discussed above, I certify this proposed regulation:

(1) Is not a ''significant regulatory action'' under Executive Order 12866,

(2) Will not affect intrastate aviation in Alaska, and

(3) Will not have a significant economic impact, positive or negative, on a substantial number of small entities under the criteria of the Regulatory Flexibility Act.

List of Subjects in 14 CFR Part 39

Air transportation, Aircraft, Aviation safety, Incorporation by reference, Safety.

The Proposed Amendment

Accordingly, under the authority delegated to me by the Administrator, the FAA proposes to amend 14 CFR part 39 as follows:

PART 39—AIRWORTHINESS DIRECTIVES

■ 1. The authority citation for part 39 continues to read as follows:

Authority: 49 U.S.C. 106(g), 40113, 44701.

§ 39.13 [Amended]

■ 2. The FAA amends § 39.13 by:

■ a. Removing Airworthiness Directive (AD) 2020–02–21, Amendment 39–19833 (85 FR 7860, February 12, 2020), and

■ b. Adding the following new AD:

Dassault Aviation: Docket No. FAA–2020–0980; Product Identifier 2020–NM–094–AD.

(a) Comments Due Date

The FAA must receive comments by December 18, 2020.

(b) Affected ADs

(1) This AD replaces AD 2020–02–21, Amendment 39–19833 (85 FR 7860, February 12, 2020) (''AD 2020–02–21'').

(2) This AD affects AD 2010–26–05, Amendment 39–16544 (75 FR 79952, December 21, 2010) (''AD 2010–26–05'').

(c) Applicability

This AD applies to all Dassault Aviation Model FALCON 2000 airplanes, certificated in any category.

(d) Subject

Air Transport Association (ATA) of America Code 05, Time Limits/Maintenance Checks.

(e) Reason

This AD was prompted by a determination that new or more restrictive airworthiness limitations are necessary. The FAA is issuing this AD to address reduced controllability of the airplane.

(f) Compliance

Comply with this AD within the compliance times specified, unless already done.

(g) Retained New Maintenance or Inspection Program Revision With No Changes

This paragraph restates the requirements of paragraph (i) of AD 2020–02–21, with no changes. Within 90 days after March 18, 2020 (the effective date of AD 2020–02–21), revise the existing maintenance or inspection program, as applicable, to incorporate the information specified in Chapter 5–40, Airworthiness Limitations, Revision 20, dated November 2018, of the Dassault Aviation Falcon 2000 Maintenance Manual. The initial compliance time for doing the tasks is at the time specified in Chapter 5–40, Airworthiness Limitations, Revision 20, dated November 2018, of the Dassault Aviation Falcon 2000 Maintenance Manual, or within 90 days after March 18, 2020, whichever occurs later, except as required by paragraphs (g)(1) through (3) of this AD. The term ''LDG'' in the ''First Inspection'' column of any table in the service information specified in this paragraph means total airplane landings. The term ''FH'' in the ''First Inspection'' column of any table in the service information specified in this paragraph means total flight hours. The term ''FC'' in the ''First Inspection'' column of any table in the service information specified in this paragraph means total flight cycles. The term ''M'' in the ''First Inspection'' column of any table in the service information specified in this paragraph means months since date of issuance of the original airworthiness certificate or original export certificate of airworthiness.

(1) For Task 30–11–09–350–801 identified in the service information specified in the introductory text of paragraph (g) of this AD, the initial compliance time is the later of the times specified in paragraphs (g)(1)(i) and (ii) of this AD.

(i) At the earlier of the times specified in paragraphs (g)(1)(i)(A) and (B) of this AD.

(A) Prior to the accumulation of 2,400 total flight hours or 2,000 total flight cycles, whichever occurs first.

(B) Within 2,400 flight hours or 2,000 flight cycles after April 7, 2014 (the effective date of AD 2014–03–12, Amendment 39–17749 (79 FR 11693, March 3, 2014)), whichever occurs first.

(ii) Within 30 days after April 7, 2014 (the effective date of AD 2014–03–12).

(2) For Task 52–20–00–610–801–01 identified in the service information specified in the introductory text of paragraph (g) of this AD, the initial compliance time is within 24 months after April 7, 2014 (the effective date of AD 2014–03–12).

(3) The limited service life of part number F2MA721512100 is 3,750 total flight cycles on the part or 6 years since the manufacturing date of the part, whichever occurs first.

(h) Retained No Alternative Actions or Intervals With a New Exception

This paragraph restates the requirements of paragraph (j) of AD 2020–02–21, with a new exception. Except as required by paragraph (i) of this AD, after the existing maintenance or inspection program has been revised as required by paragraph (g) of this AD, no alternative actions (*e.g.,* inspections) or intervals may be used unless the actions or intervals are approved as an AMOC in accordance with the procedures specified in paragraph (m)(1) of this AD.

(i) New Maintenance or Inspection Program Revision

Except as specified in paragraph (j) of this AD: Comply with all required actions and compliance times specified in, and in accordance with, European Union Aviation Safety Agency (EASA) AD 2020–0113, dated May 20, 2020 (''EASA AD 2020–0113''). Accomplishing the maintenance or inspection program revision required by this paragraph terminates the requirements of paragraph (g) of this AD.

(j) Exceptions to EASA AD 2020–0113

(1) The requirements specified in paragraphs (1) and (2) of EASA AD 2020–0113 do not apply to this AD.

(2) Paragraph (3) of EASA AD 2020–0113 specifies revising ''the approved AMP'' within 12 months after its effective date, but this AD requires revising the existing maintenance or inspection program, as applicable, to incorporate the ''limitations, tasks and associated thresholds and intervals'' specified in paragraph (3) of EASA AD 2020–0113 within 90 days after the effective date of this AD.

(3) The initial compliance time for doing the tasks specified in paragraph (3) of EASA AD 2020–0113 is at the applicable ''associated thresholds'' specified in paragraph (3) of EASA AD 2020–0113, or within 90 days after the effective date of this AD, whichever occurs later.

(4) The provisions specified in paragraphs (4) and (5) of EASA AD 2020–0113 do not apply to this AD.

(5) The ''Remarks'' section of EASA AD 2020–0113 does not apply to this AD.

(k) New Provisions for Alternative Actions and Intervals

After the maintenance or inspection program has been revised as required by paragraph (i) of this AD, no alternative actions (*e.g.,* inspections) and intervals are allowed unless they are approved as specified in the provisions of the ''Ref. Publications'' section of EASA AD 2020–0113.

(l) Terminating Action for Certain Actions in AD 2010–26–05

Accomplishing the actions required by paragraph (g) or (i) of this AD terminates the requirements of paragraph (g) of AD 2010–26–05 for Model FALCON 2000 airplanes only.

(m) Other FAA AD Provisions

The following provisions also apply to this AD:

(1) *Alternative Methods of Compliance (AMOCs):* The Manager, Large Aircraft Section, International Validation Branch, FAA, has the authority to approve AMOCs for this AD, if requested using the procedures found in 14 CFR 39.19. In accordance with 14 CFR 39.19, send your request to your principal inspector or local Flight Standards District Office, as appropriate. If sending information directly to the Large Aircraft Section, International Validation Branch, send it to the attention of the person identified in paragraph (n)(4) of this AD. Information may be emailed to: *9-AVS-AIR-730-AMOC@faa.gov.*

(i) Before using any approved AMOC, notify your appropriate principal inspector, or lacking a principal inspector, the manager of the local flight standards district office/certificate holding district office.

(ii) AMOCs approved previously for AD 2020–02–21 are approved as AMOCs for the corresponding provisions of EASA AD 2020–0113 that are required by paragraph (i) of this AD.

(2) *Contacting the Manufacturer:* For any requirement in this AD to obtain instructions from a manufacturer, the instructions must be accomplished using a method approved by the Manager, Large Aircraft Section, International Validation Branch, FAA; or EASA; or Dassault Aviation's EASA Design Organization Approval (DOA). If approved by the DOA, the approval must include the DOA-authorized signature.

(n) Related Information

(1) For EASA AD 2020–0113, contact the EASA, Konrad-Adenauer-Ufer 3, 50668 Cologne, Germany; telephone +49 221 8999 000; email *ADs@easa.europa.eu;* internet *www.easa.europa.eu.* You may find this EASA AD on the EASA website at *https://ad.easa.europa.eu.*

(2) For Dassault service information identified in this AD, contact Dassault Falcon Jet Corporation, Teterboro Airport, P.O. Box 2000, South Hackensack, NJ 07606; phone: 201–440–6700; internet: *https://www.dassaultfalcon.com.*

(3) You may view this material at the FAA, Airworthiness Products Section, Operational Safety Branch, 2200 South 216th St., Des Moines, WA. For information on the availability of this material at the FAA, call 206–231–3195. This material may be found in the AD docket on the internet at *https://www.regulations.gov* by searching for and locating Docket No. FAA–2020–0980.

(4) For more information about this AD, contact Tom Rodriguez, Aerospace Engineer, Large Aircraft Section, International Validation Branch, FAA, 2200 South 216th St., Des Moines, WA 98198; telephone and fax 206–231–3226; email *tom.rodriguez@faa.gov.*

Issued on October 27, 2020.

Lance T. Gant,

Director, Compliance & Airworthiness Division, Aircraft Certification Service.

[FR Doc. 2020–24148 Filed 11–2–20; 8:45 am]

BILLING CODE 4910–13–P

DEPARTMENT OF TRANSPORTATION

Federal Aviation Administration

14 CFR Part 39

[Docket No. FAA–2020–0976; Product Identifier 2020–NM–095–AD]

RIN 2120–AA64

Airworthiness Directives; Dassault Aviation Airplanes

AGENCY: Federal Aviation Administration (FAA), DOT.

ACTION: Notice of proposed rulemaking (NPRM).

SUMMARY: The FAA proposes to supersede Airworthiness Directive (AD) 2020–04–22, which applies to certain Dassault Aviation Model FALCON 2000EX airplanes. AD 2020–04–22 requires revising the existing maintenance or inspection program, as applicable, to incorporate new or more restrictive airworthiness limitations. Since the FAA issued AD 2020–04–22, the FAA has determined that new or more restrictive airworthiness limitations are necessary. This proposed AD would require revising the existing maintenance or inspection program, as applicable, to incorporate new or more restrictive airworthiness limitations, as specified in a European Union Aviation Safety Agency (EASA) AD, which will be incorporated by reference. The FAA is proposing this AD to address the unsafe condition on these products.

DATES: The FAA must receive comments on this proposed AD by December 18, 2020.

ADDRESSES: You may send comments, using the procedures found in 14 CFR 11.43 and 11.45, by any of the following methods:

- *Federal eRulemaking Portal:* Go to *https://www.regulations.gov.* Follow the instructions for submitting comments.
- *Fax:* 202–493–2251.
- *Mail:* U.S. Department of Transportation, Docket Operations, M–30, West Building Ground Floor, Room W12–140, 1200 New Jersey Avenue SE, Washington, DC 20590.
- *Hand Delivery:* Deliver to Mail address above between 9 a.m. and 5 p.m., Monday through Friday, except Federal holidays.

For EASA material that will be incorporated by reference (IBR) in this AD, contact the EASA, Konrad-Adenauer-Ufer 3, 50668 Cologne, Germany; telephone +49 221 8999 000; email *ADs@easa.europa.eu;* internet *www.easa.europa.eu.* You may find this IBR material on the EASA website at *https://ad.easa.europa.eu.* For Dassault Aviation service information identified in this proposed AD, contact Dassault Falcon Jet Corporation, Teterboro Airport, P.O. Box 2000, South Hackensack, NJ 07606; telephone 201–440–6700; internet *https://www.dassaultfalcon.com.* You may view this IBR material at the FAA, Airworthiness Products Section, Operational Safety Branch, 2200 South 216th St., Des Moines, WA. For information on the availability of this material at the FAA, call 206–231–3195. It is also available in the AD docket on the internet at *https://www.regulations.gov* by searching for and locating Docket No. FAA–2020–0976.

Examining the AD Docket

You may examine the AD docket on the internet at *https://www.regulations.gov* by searching for and locating Docket No. FAA–2020–0976; or in person at Docket Operations

between 9 a.m. and 5 p.m., Monday through Friday, except Federal holidays. The AD docket contains this NPRM, any comments received, and other information. The street address for Docket Operations is listed above. Comments will be available in the AD docket shortly after receipt.

FOR FURTHER INFORMATION CONTACT: Tom Rodriguez, Aerospace Engineer, Large Aircraft Section, International Validation Branch, FAA, 2200 South 216th St., Des Moines, WA 98198; telephone and fax 206–231–3226; email *tom.rodriguez@faa.gov.*

SUPPLEMENTARY INFORMATION:

Comments Invited

The FAA invites you to send any written relevant data, views, or arguments about this proposal. Send your comments to an address listed under **ADDRESSES**. Include ''Docket No. FAA–2020–0976; Product Identifier 2020–NM–095–AD'' at the beginning of your comments. The most helpful comments reference a specific portion of the proposal, explain the reason for any recommended change, and include supporting data. The FAA will consider all comments received by the closing date and may amend the proposal because of those comments.

Except for Confidential Business Information (CBI) as described in the following paragraph, and other information as described in 14 CFR 11.35, the FAA will post all comments received, without change, to *https://www.regulations.gov,* including any personal information you provide. The agency will also post a report summarizing each substantive verbal contact received about this proposed AD.

Confidential Business Information

CBI is commercial or financial information that is both customarily and actually treated as private by its owner. Under the Freedom of Information Act (FOIA) (5 U.S.C. 552), CBI is exempt from public disclosure. If your comments responsive to this NPRM contain commercial or financial information that is customarily treated as private, that you actually treat as private, and that is relevant or responsive to this NPRM, it is important that you clearly designate the submitted comments as CBI. Please mark each page of your submission containing CBI as ''PROPIN.'' The FAA will treat such marked submissions as confidential under the FOIA, and they will not be placed in the public docket of this NPRM. Submissions containing CBI should be sent to Tom Rodriguez, Aerospace Engineer, Large Aircraft Section, International Validation Branch, FAA, 2200 South 216th St., Des Moines, WA 98198; telephone and fax 206–231–3226; email *tom.rodriguez@faa.gov.* Any commentary that the FAA receives which is not specifically designated as CBI will be placed in the public docket for this rulemaking.

Discussion

The FAA issued AD 2020–04–22, Amendment 39–19858 (85 FR 17487, March 30, 2020) (''AD 2020–04–22''), for certain Dassault Aviation Model FALCON 2000EX airplanes. AD 2020–04–22 requires revising the existing maintenance or inspection program, as applicable, to incorporate new or more restrictive airworthiness limitations. The FAA issued AD 2020–04–22 to address reduced structural integrity of the airplane. AD 2020–04–22 specifies that accomplishing the revision required by paragraph (g) or (i) of that AD terminates the requirements of paragraph (g)(1) of AD 2010–26–05, Amendment 39–16544 (75 FR 79952, December 21, 2010), for Dassault Aviation Model FALCON 2000EX airplanes.

Actions Since AD 2020–04–22 Was Issued

Since the FAA issued AD 2020–04–22, the FAA has determined that new or more restrictive airworthiness limitations are necessary.

The EASA, which is the Technical Agent for the Member States of the European Union, has issued EASA AD 2020–0114, dated May 20, 2020 (''EASA AD 2020–0114'') (also referred to as the Mandatory Continuing Airworthiness Information, or ''the MCAI''), to correct an unsafe condition for all Dassault Aviation Model FALCON 2000EX airplanes.

Airplanes with an original airworthiness certificate or original export certificate of airworthiness issued after February 15, 2020, must comply with the airworthiness limitations specified as part of the approved type design and referenced on the type certificate data sheet for those airplanes; this AD therefore does not include these airplanes in the applicability.

This proposed AD was prompted by a determination that new or more restrictive airworthiness limitations are necessary. The FAA is proposing this AD to address reduced structural integrity of the airplane. See the MCAI for additional background information.

Related Service Information Under 1 CFR Part 51

EASA AD 2020–0114 describes new or more restrictive airworthiness limitations for airplane structures and safe life limits.

This proposed AD would also require Chapter 5–40, Airworthiness Limitations, DGT 113877, Revision 12, dated November 2018, of the Dassault Falcon 2000EX Maintenance Manual, which the Director of the Federal Register approved for incorporation by reference as of May 4, 2020 (85 FR 17487, March 30, 2020).

This material is reasonably available because the interested parties have access to it through their normal course of business or by the means identified in the **ADDRESSES** section.

FAA's Determination and Requirements of This Proposed AD

This product has been approved by the aviation authority of another country, and is approved for operation in the United States. Pursuant to the FAA's bilateral agreement with the State of Design Authority, the FAA has been notified of the unsafe condition described in the MCAI and service information referenced above. The FAA is proposing this AD because the FAA has evaluated all pertinent information and determined an unsafe condition exists and is likely to exist or develop on other products of the same type design.

Proposed AD Requirements

This proposed AD would retain the requirements of AD 2020–04–22. This proposed AD would also require revising the existing maintenance or inspection program, as applicable, to incorporate new or more restrictive airworthiness limitations, which are specified in EASA AD 2020–0114 described previously, as incorporated by reference. Any differences with EASA AD 2020–0114 are identified as exceptions in the regulatory text of this AD.

This proposed AD would require revisions to certain operator maintenance documents to include new actions (*e.g.,* inspections). Compliance with these actions is required by 14 CFR 91.403(c). For airplanes that have been previously modified, altered, or repaired in the areas addressed by this proposed AD, the operator may not be able to accomplish the actions described in the revisions. In this situation, to comply with 14 CFR 91.403(c), the operator must request approval for an alternative method of compliance according to paragraph (m)(1) of this proposed AD.

Explanation of Required Compliance Information

In the FAA's ongoing efforts to improve the efficiency of the AD process, the FAA initially worked with Airbus and EASA to develop a process to use certain EASA ADs as the primary source of information for compliance with requirements for corresponding FAA ADs. The FAA has since coordinated with other manufacturers and civil aviation authorities (CAAs) to use this process. As a result, EASA AD 2020–0114 will be incorporated by reference in the FAA final rule. This proposed AD would, therefore, require compliance with EASA AD 2020–0114 in its entirety, through that incorporation, except for any differences identified as exceptions in the regulatory text of this proposed AD. Using common terms that are the same as the heading of a particular section in the EASA AD does not mean that operators need comply only with that section. For example, where the AD requirement refers to ''all required actions and compliance times,'' compliance with this AD requirement is not limited to the section titled ''Required Action(s) and Compliance Time(s)'' in the EASA AD.

Service information specified in EASA AD 2020–0114 that is required for compliance with EASA AD 2020–0114 will be available on the internet at *https://www.regulations.gov* by searching for and locating Docket No. FAA–2020–0976 after the FAA final rule is published.

Airworthiness Limitation ADs Using the New Process

The FAA's process of incorporating by reference MCAI ADs as the primary source of information for compliance with corresponding FAA ADs has been limited to certain MCAI ADs (primarily those with service bulletins as the primary source of information for accomplishing the actions required by the FAA AD). However, the FAA is now expanding the process to include MCAI ADs that require a change to airworthiness limitation documents, such as airworthiness limitation sections.

For these ADs that incorporate by reference an MCAI AD that changes airworthiness limitations, the FAA requirements are unchanged. Operators must revise the existing maintenance or inspection program, as applicable, to incorporate the information specified in the new airworthiness limitation document. The airworthiness limitations must be followed according to 14 CFR 91.403(c) and 91.409(e).

The previous format of the airworthiness limitation ADs included a paragraph that specified that no alternative actions (*e.g.,* inspections) or intervals may be used unless the actions or intervals are approved as an alternative method of compliance (AMOC) in accordance with the procedures specified in the AMOCs paragraph under ''Other FAA Provisions.'' This new format includes a ''New Provisions for Alternative Actions and Intervals'' paragraph that does not specifically refer to AMOCs, but operators may still request an AMOC to use an alternative action or interval.

Costs of Compliance

The FAA estimates that this proposed AD affects 17 airplanes of U.S. registry. The FAA estimates the following costs to comply with this proposed AD:

The FAA estimates the total cost per operator for the retained actions from AD 2020–04–22 to be $7,650 (90 work-hours × $85 per work-hour).

The FAA has determined that revising the existing maintenance or inspection program takes an average of 90 work-hours per operator, although the agency recognizes that this number may vary from operator to operator. In the past, the agency has estimated that this action takes 1 work-hour per airplane. Since operators incorporate maintenance or inspection program changes for their affected fleet(s), the FAA has determined that a per-operator estimate is more accurate than a per-airplane estimate.

The FAA estimates the total cost per operator for the new revision to be $7,650 (90 work-hours × $85 per work-hour).

Authority for This Rulemaking

Title 49 of the United States Code specifies the FAA's authority to issue rules on aviation safety. Subtitle I, section 106, describes the authority of the FAA Administrator. Subtitle VII: Aviation Programs, describes in more detail the scope of the Agency's authority.

The FAA is issuing this rulemaking under the authority described in Subtitle VII, Part A, Subpart III, Section 44701: General requirements. Under that section, Congress charges the FAA with promoting safe flight of civil aircraft in air commerce by prescribing regulations for practices, methods, and procedures the Administrator finds necessary for safety in air commerce. This regulation is within the scope of that authority because it addresses an unsafe condition that is likely to exist or develop on products identified in this rulemaking action.

Regulatory Findings

The FAA determined that this proposed AD would not have federalism implications under Executive Order 13132. This proposed AD would not have a substantial direct effect on the States, on the relationship between the national Government and the States, or on the distribution of power and responsibilities among the various levels of government.

For the reasons discussed above, I certify this proposed regulation:

(1) Is not a ''significant regulatory action'' under Executive Order 12866,

(2) Will not affect intrastate aviation in Alaska, and

(3) Will not have a significant economic impact, positive or negative, on a substantial number of small entities under the criteria of the Regulatory Flexibility Act.

List of Subjects in 14 CFR Part 39

Air transportation, Aircraft, Aviation safety, Incorporation by reference, Safety.

The Proposed Amendment

Accordingly, under the authority delegated to me by the Administrator, the FAA proposes to amend 14 CFR part 39 as follows:

PART 39—AIRWORTHINESS DIRECTIVES

■ 1. The authority citation for part 39 continues to read as follows:

Authority: 49 U.S.C. 106(g), 40113, 44701.

§ 39.13 [Amended]

■ 2. The FAA amends § 39.13 by:

■ a. Removing Airworthiness Directive (AD) 2020–04–22, Amendment 39–19858 (85 FR 17487, March 30, 2020), and

■ b. Adding the following new AD:

Dassault Aviation: Docket No. FAA–2020–0976; Product Identifier 2020–NM–095–AD.

(a) Comments Due Date

The FAA must receive comments by December 18, 2020.

(b) Affected ADs

(1) This AD replaces AD 2020–04–22, Amendment 39–19858 (85 FR 17489, March 20, 2020) (''AD 2020–04–22'').

(2) This AD affects AD 2010–26–05, Amendment 39–16544 (75 FR 79952, December 21, 2010) (''AD 2010–26–05'').

(c) Applicability

This AD applies to Dassault Aviation Model FALCON 2000EX airplanes, certificated in any category, with an original airworthiness certificate or original export certificate of airworthiness issued on or before February 15, 2020.

(d) Subject

Air Transport Association (ATA) of America Code 05, Time Limits/Maintenance Checks.

(e) Reason

This AD was prompted by a determination that new or more restrictive airworthiness limitations are necessary. The FAA is issuing this AD to address reduced structural integrity of the airplane.

(f) Compliance

Comply with this AD within the compliance times specified, unless already done.

(g) Retained Maintenance or Inspection Program Revision, With No Changes

This paragraph restates the requirements of paragraph (i) of AD 2020–04–22, with no changes. For airplanes an original airworthiness certificate or original export certificate of airworthiness issued on or before January 15, 2019: Within 90 days after May 4, 2020 (the effective date of AD 2020–04–22), revise the existing maintenance or inspection program, as applicable, to incorporate the information specified in Chapter 5–40, Airworthiness Limitations, DGT 113877, Revision 12, dated November 2018, of the Dassault Falcon 2000EX Maintenance Manual. The initial compliance times for doing the tasks are at the time specified in Chapter 5–40, Airworthiness Limitations, DGT 113877, Revision 12, dated November 2018, of the Dassault Falcon 2000EX Maintenance Manual, or within 90 days after May 4, 2020, whichever occurs later; except for task number 52–20–00–610–801–01, the initial compliance time is within 24 months after October 8, 2014 (the effective date of AD 2014–16–12, Amendment 39–17936 (79 FR 52187, September 3, 2014)). The term ''LDG'' in the ''First Inspection'' column of any table in the service information specified in this paragraph means total airplane landings. The term ''FH'' in the ''First Inspection'' column of any table in the service information specified in this paragraph means total flight hours. The term ''FC'' in the ''First Inspection'' column of any table in the service information specified in this paragraph means total flight cycles. Accomplishing the maintenance or inspection program revision required by paragraph (i) of this AD terminates the requirements of this paragraph.

(h) Retained Provision: No Alternative Actions or Intervals, With a New Exception

This paragraph restates the requirements of paragraph (j) of AD 2020–04–22, with a new exception. Except as required by paragraph (k) of this AD, after the existing maintenance or inspection program has been revised as required by paragraph (g) of this AD, no alternative actions (*e.g.,* inspections) or intervals may be used unless the actions or intervals are approved as an AMOC in accordance with the procedures specified in paragraph (m)(1) of this AD.

(i) New Maintenance or Inspection Program Revision

Except as specified in paragraph (j) of this AD: Comply with all required actions and compliance times specified in, and in accordance with, European Union Aviation Safety Agency (EASA) AD 2020–0114, dated May 20, 2020 (''EASA AD 2020–0114''). Accomplishing the maintenance or inspection program revision required by this paragraph terminates the requirements of paragraph (g) of this AD.

(j) Exceptions to EASA AD 2020–0114

(1) The requirements specified in paragraphs (1) and (2) of EASA AD 2020–0114 do not apply to this AD.

(2) Paragraph (3) of EASA AD 2020–0114 specifies revising ''the approved AMP'' within 12 months after its effective date, but this AD requires revising the existing maintenance or inspection program, as applicable, to incorporate the ''limitations, tasks and associated thresholds and intervals'' specified in paragraph (3) of EASA AD 2020–0114 within 90 days after the effective date of this AD.

(3) The initial compliance time for doing the tasks specified in paragraph (3) of EASA AD 2020–0114 is at the applicable ''associated thresholds'' specified in paragraph (3) of EASA AD 2020–0114, or within 90 days after the effective date of this AD, whichever occurs later.

(4) The provisions specified in paragraphs (4) and (5) of EASA AD 2020–0114 do not apply to this AD.

(5) The ''Remarks'' section of EASA AD 2020–0114 does not apply to this AD.

(k) New Provisions for Alternative Actions and Intervals

After the maintenance or inspection program has been revised as required by paragraph (i) of this AD, no alternative actions (*e.g.,* inspections), and intervals are allowed unless they are approved as specified in the provisions of the ''Ref. Publications'' section of EASA AD 2020–0114.

(l) Terminating Action for Certain Actions in AD 2010–26–05

Accomplishing the actions required by paragraph (g) or (i) of this AD terminates the requirements of paragraph (g)(1) of AD 2010–26–05, for Dassault Aviation Model FALCON 2000EX airplanes only.

(m) Other FAA AD Provisions

The following provisions also apply to this AD:

(1) *Alternative Methods of Compliance (AMOCs):* The Manager, Large Aircraft Section, International Validation Branch, FAA, has the authority to approve AMOCs for this AD, if requested using the procedures found in 14 CFR 39.19. In accordance with 14 CFR 39.19, send your request to your principal inspector or local Flight Standards District Office, as appropriate. If sending information directly to the Large Aircraft Section, International Validation Branch, send it to the attention of the person identified in paragraph (n)(4) of this AD. Information may be emailed to: *9-AVS-AIR-730-AMOC@faa.gov.* Before using any approved AMOC, notify your appropriate principal inspector, or lacking a principal inspector, the manager of the local flight standards district office/certificate holding district office.

(2) *Contacting the Manufacturer:* For any requirement in this AD to obtain instructions from a manufacturer, the instructions must be accomplished using a method approved by the Manager, Large Aircraft Section, International Validation Branch, FAA; or EASA; or Dassault Aviation's EASA Design Organization Approval (DOA). If approved by the DOA, the approval must include the DOA-authorized signature.

(n) Related Information

(1) For information about EASA AD 2020–0114, contact the EASA, Konrad-Adenauer-Ufer 3, 50668 Cologne, Germany; telephone +49 221 8999 000; email *ADs@easa.europa.eu;* Internet *www.easa.europa.eu.* You may find this EASA AD on the EASA website at *https://ad.easa.europa.eu.*

(2) For Dassault service information identified in this AD, contact Dassault Falcon Jet Corporation, Teterboro Airport, P.O. Box 2000, South Hackensack, NJ 07606; phone: 201–440–6700; internet: *https://www.dassaultfalcon.com.*

(3) You may view this material at the FAA, Airworthiness Products Section, Operational Safety Branch, 2200 South 216th St., Des Moines, WA. For information on the availability of this material at the FAA, call 206–231–3195. This material may be found in the AD docket on the internet at *https://www.regulations.gov* by searching for and locating Docket No. FAA–2020–0976.

(4) For more information about this AD, contact Tom Rodriguez, Aerospace Engineer, Large Aircraft Section, International Validation Branch, FAA, 2200 South 216th St., Des Moines, WA 98198; telephone and fax 206–231–3226; email *tom.rodriguez@faa.gov.*

Issued on October 26, 2020.

Lance T. Gant,

Director, Compliance & Airworthiness Division, Aircraft Certification Service.

[FR Doc. 2020–24041 Filed 11–2–20; 8:45 am]

BILLING CODE 4910–13–P

DEPARTMENT OF HEALTH AND HUMAN SERVICES

Centers for Medicare & Medicaid Services

42 CFR Part 600

[CMS–2438–PN]

RIN 0938–ZB64

Basic Health Program; Federal Funding Methodology for Program Year 2022

AGENCY: Centers for Medicare & Medicaid Services (CMS), Department of Health and Human Services (HHS).

ACTION: Proposed methodology.

SUMMARY: This document proposes the methodology and data sources necessary

to determine Federal payment amounts to be made for program year 2022 to states that elect to establish a Basic Health Program under the Patient Protection and Affordable Care Act to offer health benefits coverage to low-income individuals otherwise eligible to purchase coverage through Affordable Insurance Exchanges.

DATES: To be assured consideration, comments must be received at one of the addresses provided below, no later than 5 p.m. on December 3, 2020.

ADDRESSES: In commenting, refer to file code CMS–2438–PN.

Comments, including mass comment submissions, must be submitted in one of the following three ways (please choose only one of the ways listed):

1. *Electronically.* You may submit electronic comments on this regulation to *http://www.regulations.gov.* Follow the ''Submit a comment'' instructions.

2. *By regular mail.* You may mail written comments to the following address ONLY: Centers for Medicare & Medicaid Services, Department of Health and Human Services, Attention: CMS–2438–PN, P.O. Box 8016, Baltimore, MD 21244–8016.

Please allow sufficient time for mailed comments to be received before the close of the comment period.

3. *By express or overnight mail.* You may send written comments to the following address ONLY: Centers for Medicare & Medicaid Services, Department of Health and Human Services, Attention: CMS–2438–PN, Mail Stop C4–26–05, 7500 Security Boulevard, Baltimore, MD 21244–1850.

For information on viewing public comments, see the beginning of the **SUPPLEMENTARY INFORMATION** section.

FOR FURTHER INFORMATION CONTACT: Christopher Truffer, (410) 786–1264; or Cassandra Lagorio, (410) 786–4554.

SUPPLEMENTARY INFORMATION: *Inspection of Public Comments:* All comments received before the close of the comment period are available for viewing by the public, including any personally identifiable or confidential business information that is included in a comment. We post all comments received before the close of the comment period on the following website as soon as possible after they have been received: *http://www.regulations.gov.* Follow the search instructions on that website to view public comments.

I. Background

A. Overview of the Basic Health Program

Section 1331 of the Patient Protection and Affordable Care Act (Pub. L. 111–148, enacted on March 23, 2010), as amended by the Health Care and Education Reconciliation Act of 2010 (Pub. L. 111–152, enacted on March 30, 2010) (collectively referred to as the Patient Protection and Affordable Care Act) provides states with an option to establish a Basic Health Program (BHP). In the states that elect to operate a BHP, the BHP will make affordable health benefits coverage available for individuals under age 65 with household incomes between 133 percent and 200 percent of the Federal poverty level (FPL) who are not otherwise eligible for Medicaid, the Children's Health Insurance Program (CHIP), or affordable employer-sponsored coverage, or for individuals whose income is below these levels but are lawfully present non-citizens ineligible for Medicaid. For those states that have expanded Medicaid coverage under section 1902(a)(10)(A)(i)(VIII) of the Social Security Act (the Act), the lower income threshold for BHP eligibility is effectively 138 percent due to the application of a required 5 percent income disregard in determining the upper limits of Medicaid income eligibility (section 1902(e)(14)(I) of the Act).

A BHP provides another option for states in providing affordable health benefits to individuals with incomes in the ranges described above. States may find a BHP a useful option for several reasons, including the ability to potentially coordinate standard health plans in the BHP with their Medicaid managed care plans, or to potentially reduce the costs to individuals by lowering premiums or cost-sharing requirements.

Federal funding for a BHP under section 1331(d)(3)(A) of the Patient Protection and Affordable Care Act is based on the amount of premium tax credit (PTC) and cost-sharing reductions (CSRs) that would have been provided for the fiscal year to eligible individuals enrolled in BHP standard health plans in the state if such eligible individuals were allowed to enroll in a qualified health plan (QHP) through Affordable Insurance Exchanges (''Exchanges''). These funds are paid to trusts established by the states and dedicated to the BHP, and the states then administer the payments to standard health plans within the BHP.

In the March 12, 2014 **Federal Register** (79 FR 14112), we published a final rule entitled the ''Basic Health Program: State Administration of Basic Health Programs; Eligibility and Enrollment in Standard Health Plans; Essential Health Benefits in Standard Health Plans; Performance Standards for Basic Health Programs; Premium and Cost Sharing for Basic Health Programs; Federal Funding Process; Trust Fund and Financial Integrity'' (hereinafter referred to as the BHP final rule) implementing section 1331 of the Patient Protection and Affordable Care Act), which governs the establishment of BHPs. The BHP final rule established the standards for state and Federal administration of BHPs, including provisions regarding eligibility and enrollment, benefits, cost-sharing requirements and oversight activities. While the BHP final rule codified the overall statutory requirements and basic procedural framework for the funding methodology, it does not contain the specific information necessary to determine Federal payments. We anticipated that the methodology would be based on data and assumptions that would reflect ongoing operations and experience of BHPs, as well as the operation of the Exchanges. For this reason, the BHP final rule indicated that the development and publication of the funding methodology, including any data sources, would be addressed in a separate annual BHP Payment Notice.

In the BHP final rule, we specified that the BHP Payment Notice process would include the annual publication of both a proposed and final BHP Payment Notice. The proposed BHP Payment Notice would be published in the **Federal Register** each October, 2 years prior to the applicable program year, and would describe the proposed funding methodology for the relevant BHP year,[1] including how the Secretary considered the factors specified in section 1331(d)(3) of the Patient Protection and Affordable Care Act, along with the proposed data sources used to determine the Federal BHP payment rates for the applicable program year. The final BHP Payment Notice would be published in the **Federal Register** in February, and would include the final BHP funding methodology, as well as the Federal BHP payment rates for the applicable BHP program year. For example, payment rates in the final BHP Payment Notice published in February 2015 applied to BHP program year 2016, beginning in January 2016. As discussed in section II.D. of this proposed methodology, and as referenced in 42 CFR 600.610(b)(2), state data needed to calculate the Federal BHP payment rates for the final BHP Payment Notice must be submitted to CMS.

[1] BHP program years span from January 1 through December 31.

As described in the BHP final rule, once the final methodology for the applicable program year has been published, we will generally make modifications to the BHP funding methodology on a prospective basis, with limited exceptions. The BHP final rule provided that retrospective adjustments to the state's BHP payment amount may occur to the extent that the prevailing BHP funding methodology for a given program year permits adjustments to a state's Federal BHP payment amount due to insufficient data for prospective determination of the relevant factors specified in the applicable final BHP Payment Notice. For example, the population health factor adjustment described in section II.D.3. of this proposed methodology allows for a retrospective adjustment (at the state's option) to account for the impact that BHP may have had on the risk pool and QHP premiums in the Exchange. Additional adjustments could be made to the payment rates to correct errors in applying the methodology (such as mathematical errors).

Under section 1331(d)(3)(ii) of the Patient Protection and Affordable Care Act, the funding methodology and payment rates are expressed as an amount per eligible individual enrolled in a BHP standard health plan (BHP enrollee) for each month of enrollment. These payment rates may vary based on categories or classes of enrollees. Actual payment to a state would depend on the actual enrollment of individuals found eligible in accordance with a state's certified BHP Blueprint eligibility and verification methodologies in coverage through the state BHP. A state that is approved to implement a BHP must provide data showing quarterly enrollment of eligible individuals in the various Federal BHP payment rate cells. Such data must include the following:

- Personal identifier;
- Date of birth;
- County of residence;
- Indian status;
- Family size;
- Household income;
- Number of persons in household enrolled in BHP;
- Family identifier;
- Months of coverage;
- Plan information; and
- Any other data required by CMS to properly calculate the payment.

B. The 2018 Final Administrative Order, 2019 Payment Methodology, 2020 Payment Methodology, and 2021 Payment Methodology

On October 11, 2017, the Attorney General of the United States provided the Department of Health and Human Services and the Department of the Treasury with a legal opinion indicating that the permanent appropriation at 31 U.S.C. 1324, from which the Departments had historically drawn funds to make CSR payments, cannot be used to fund CSR payments to insurers. In light of this opinion—and in the absence of any other appropriation that could be used to fund CSR payments—the Department of Health and Human Services directed us to discontinue CSR payments to issuers until Congress provides for an appropriation. In the absence of a Congressional appropriation for Federal funding for CSRs, we cannot provide states with a Federal payment attributable to CSRs that BHP enrollees would have received had they been enrolled in a QHP through an Exchange.

Starting with the payment for the first quarter (Q1) of 2018 (which began on January 1, 2018), we stopped paying the CSR component of the quarterly BHP payments to New York and Minnesota (the states), the only states operating a BHP in 2018. The states then sued the Secretary for declaratory and injunctive relief in the United States District Court for the Southern District of New York. *See State of New York, et al.,* v. *U.S. Department of Health and Human Services,* 18–cv–00683 (S.D.N.Y. filed Jan. 26, 2018). On May 2, 2018, the parties filed a stipulation requesting a stay of the litigation so that HHS could issue an administrative order revising the 2018 BHP payment methodology. As a result of the stipulation, the court dismissed the BHP litigation. On July 6, 2018, we issued a Draft Administrative Order on which New York and Minnesota had an opportunity to comment. Each state submitted comments. We considered the states' comments and issued a Final Administrative Order on August 24, 2018 (Final Administrative Order) setting forth the payment methodology that would apply to the 2018 BHP program year.

In the November 5, 2019 **Federal Register** (84 FR 59529 through 59548) (hereinafter referred to as the November 2019 final BHP Payment Notice), we finalized the payment methodologies for BHP program years 2019 and 2020. The 2019 payment methodology is the same payment methodology described in the Final Administrative Order. The 2020 payment methodology is the same methodology as the 2019 payment methodology with one additional adjustment to account for the impact of individuals selecting different metal tier level plans in the Exchange, referred to as the Metal Tier Selection Factor (MTSF).[2] In the August 13, 2020 **Federal Register** (85 FR 49264 through 49280) (hereinafter referred to as the August 2020 final BHP Payment Notice), we finalized the payment methodology for BHP program year 2021. The 2021 payment methodology is the same methodology as the 2020 payment methodology, with one adjustment to the income reconciliation factor (IRF). The 2022 proposed payment methodology is the same as the 2021 payment methodology, except for using more recent data for developing the value of the Metal Tier Selection Factor (MTSF).

II. Provisions of the Proposed Methodology

A. Overview of the Funding Methodology and Calculation of the Payment Amount

Section 1331(d)(3) of the Patient Protection and Affordable Care Act directs the Secretary to consider several factors when determining the Federal BHP payment amount, which, as specified in the statute, must equal 95 percent of the value of the PTC and CSRs that BHP enrollees would have been provided had they enrolled in a QHP through an Exchange. Thus, the BHP funding methodology is designed to calculate the PTC and CSRs as consistently as possible and in general alignment with the methodology used by Exchanges to calculate the advance payments of the PTC (APTC) and CSRs, and by the Internal Revenue Service (IRS) to calculate final PTCs. In general, we have relied on values for factors in the payment methodology specified in statute or other regulations as available, and have developed values for other factors not otherwise specified in statute, or previously calculated in other regulations, to simulate the values of the PTC and CSRs that BHP enrollees would have received if they had enrolled in QHPs offered through an Exchange. In accordance with section 1331(d)(3)(A)(iii) of the Patient Protection and Affordable Care Act, the final funding methodology must be certified by the Chief Actuary of CMS, in consultation with the Office of Tax Analysis (OTA) of the Department of the Treasury, as having met the requirements of section 1331(d)(3)(A)(ii) of the Patient Protection and Affordable Care Act.

[2] "Metal tiers" refer to the different actuarial value plan levels offered on the Exchanges. Bronze-level plans generally must provide 60 percent actuarial value; silver-level 70 percent actuarial value; gold-level 80 percent actuarial value; and platinum-level 90 percent actuarial value. See 45 CFR 156.140.

Section 1331(d)(3)(A)(ii) of the Patient Protection and Affordable Care Act specifies that the payment determination shall take into account all relevant factors necessary to determine the value of the PTCs and CSRs that would have been provided to eligible individuals, including but not limited to, the age and income of the enrollee, whether the enrollment is for self-only or family coverage, geographic differences in average spending for health care across rating areas, the health status of the enrollee for purposes of determining risk adjustment payments and reinsurance payments that would have been made if the enrollee had enrolled in a QHP through an Exchange, and whether any reconciliation of PTC and CSR would have occurred if the enrollee had been so enrolled. Under the payment methodologies for 2015 (79 FR 13887 through 14151) (published on March 12, 2014), for 2016 (80 FR 9636 through 9648) (published on February 24, 2015), for 2017 and 2018 (81 FR 10091 through 10105) (published on February 29, 2016), for 2019 and 2020 (84 FR 59529 through) (published on November 5, 2019), and for 2021 (85 FR 49264 through 49280) (published on August 13, 2020) (hereinafter referred to as the August 2020 final BHP Payment Notice), the total Federal BHP payment amount has been calculated using multiple rate cells in each state. Each rate cell represents a unique combination of age range (if applicable), geographic area, coverage category (for example, self-only or two-adult coverage through the BHP), household size, and income range as a percentage of FPL, and there is a distinct rate cell for individuals in each coverage category within a particular age range who reside in a specific geographic area and are in households of the same size and income range. The BHP payment rates developed also are consistent with the state's rules on age rating. Thus, in the case of a state that does not use age as a rating factor on an Exchange, the BHP payment rates would not vary by age.

Under the methodology finalized in the August 2020 final BHP Payment Notice, the rate for each rate cell is calculated in two parts. The first part is equal to 95 percent of the estimated PTC that would have been paid if a BHP enrollee in that rate cell had instead enrolled in a QHP in an Exchange. The second part is equal to 95 percent of the estimated CSR payment that would have been made if a BHP enrollee in that rate cell had instead enrolled in a QHP in an Exchange. These two parts are added together and the total rate for that rate cell would be equal to the sum of the PTC and CSR rates. As noted in the November 2019 final BHP Payment Notice, we currently assign a value of zero to the CSR portion of the BHP payment rate calculation, because there is presently no available appropriation from which we can make the CSR portion of any BHP Payment.

We propose that Equation (1) would be used to calculate the estimated PTC for eligible individuals enrolled in the BHP in each rate cell. We note that throughout this proposed methodology, when we refer to enrollees and enrollment data, we mean data regarding individuals who are enrolled in the BHP who have been found eligible for the BHP using the eligibility and verification requirements that are applicable in the state's most recent certified Blueprint. By applying the equations separately to rate cells based on age (if applicable), income and other factors, we would effectively take those factors into account in the calculation. In addition, the equations would reflect the estimated experience of individuals in each rate cell if enrolled in coverage through an Exchange, taking into account additional relevant variables. Each of the variables in the equations is defined in this section, and further detail is provided later in this section of this proposed methodology. In addition, we describe in Equation (2a) and Equation (2b) (below) how we propose to calculate the adjusted reference premium (ARP) that is used in Equation (1).

Equation 1: Estimated PTC by Rate Cell

We propose that the estimated PTC, on a per enrollee basis, would continue to be calculated for each rate cell for each state based on age range (if applicable), geographic area, coverage category, household size, and income range. The PTC portion of the rate would be calculated in a manner consistent with the methodology used to calculate the PTC for persons enrolled in a QHP, with 5 adjustments. First, the PTC portion of the rate for each rate cell would represent the mean, or average, expected PTC that all persons in the rate cell would receive, rather than being calculated for each individual enrollee. Second, the reference premium (RP) (described in section II.D.1. of this proposed methodology) used to calculate the PTC would be adjusted for the BHP population health status, and in the case of a state that elects to use 2021 premiums for the basis of the BHP Federal payment, for the projected change in the premium from 2021 to 2022, to which the rates announced in the final payment methodology would apply. These adjustments are described in Equation (2a) and Equation (2b). Third, the PTC would be adjusted prospectively to reflect the mean, or average, net expected impact of income reconciliation on the combination of all persons enrolled in the BHP; this adjustment, the IRF, as described in section II.D.7. of this proposed methodology, would account for the impact on the PTC that would have occurred had such reconciliation been performed. Fourth, the PTC would be adjusted to account for the estimated impacts of plan selection; this adjustment, the MTSF, would reflect the effect on the average PTC of individuals choosing different metal tier levels of QHPs. Finally, the rate is multiplied by 95 percent, consistent with section 1331(d)(3)(A)(i) of the Patient Protection and Affordable Care Act. We note that in the situation where the average income contribution of an enrollee would exceed the ARP, we would calculate the PTC to be equal to 0 and would not allow the value of the PTC to be negative.

We propose using Equation (1) to calculate the PTC rate, consistent with the methodology described above:

$$\textbf{Equation (1)}:\ PTC_{a,g,c,h,i} = \left[ARP_{a,g,c} - \frac{\sum_j I_{h,i,j} \times PTCF_{h,i,j}}{n}\right] \times IRF \times MTSF \times 95\%$$

$PTC_{a,g,c,h,i}$ = Premium tax credit portion of BHP payment rate
a = Age range
g = Geographic area
c = Coverage status (self-only or applicable category of family coverage) obtained through BHP
h = Household size
i = Income range (as percentage of FPL)
$ARP_{a,g,c}$ = Adjusted reference premium
$I_{h,i,j}$ = Income (in dollars per month) at each 1 percentage-point increment of FPL
j = j^{th} percentage-point increment FPL
n = Number of income increments used to calculate the mean PTC

$PTCF_{h,i,j}$ = Premium tax credit formula percentage
IRF = Income reconciliation factor
$MTSF$ = Metal tier selection factor

Equation (2a) and Equation (2b): Adjusted Reference Premium (ARP) Variable (Used in Equation 1)

As part of the calculations for the PTC component, we propose to continue to calculate the value of the ARP as described below. Consistent with the existing approach, we are proposing to allow states to choose between using the actual current year premiums or the prior year's premiums multiplied by the premium trend factor (PTF) (as described in section II.E. of this proposed methodology). Below we describe how we would continue to calculate the ARP under each option.

In the case of a state that elected to use the reference premium (RP) based on the current program year (for example, 2022 premiums for the 2022 program year), we propose to calculate the value of the ARP as specified in Equation (2a). The ARP would be equal to the RP, which would be based on the second lowest cost silver plan premium in the applicable program year, multiplied by the BHP population health factor (PHF) (described in section II.D.3. of this proposed methodology), which would reflect the projected impact that enrolling BHP-eligible individuals in QHPs through an Exchange would have had on the average QHP premium, and multiplied by the premium adjustment factor (PAF) (described in section II.D of this proposed methodology), which would account for the change in silver-level premiums due to the discontinuance of CSR payments.

$$\textbf{Equation (2a)}: \; ARP_{a,g,c} = RP_{a,g,c} \times PHF \times PAF$$

$ARP_{a,g,c}$ = Adjusted reference premium
a = Age range
g = Geographic area
c = Coverage status (self-only or applicable category of family coverage) obtained through BHP
$RP_{a,g,c}$ = Reference premium
PHF = Population health factor
PAF = Premium adjustment factor

In the case of a state that elected to use the RP based on the prior program year (for example, 2021 premiums for the 2022 program year, as described in more detail in section II.E. of this proposed methodology), we propose to calculate the value of the ARP as specified in Equation (2b). The ARP would be equal to the RP, which would be based on the second lowest cost silver plan premium in 2021, multiplied by the BHP PHF (described in section II.D of this proposed methodology), which would reflect the projected impact that enrolling BHP-eligible individuals in QHPs on an Exchange would have had on the average QHP premium, multiplied by the PAF (described in section II.D. of this proposed methodology), which would account for the change in silver-level premiums due to the discontinuance of CSR payments, and multiplied by the premium trend factor (PTF) (described in section II.E. of this proposed methodology), which would reflect the projected change in the premium level between 2021 and 2022.

$$\textbf{Equation (2b)}: \; ARP_{a,g,c} = RP_{a,g,c} \times PHF \times PAF \times PTF$$

$ARP_{a,g,c}$ = Adjusted reference premium
a = Age range
g = Geographic area
c = Coverage status (self-only or applicable category of family coverage) obtained through BHP
$RP_{a,g,c}$ = Reference premium
PHF = Population health factor
PAF = Premium adjustment factor
PTF = Premium trend factor

Equation 3: Determination of Total Monthly Payment for BHP Enrollees in Each Rate Cell

In general, the rate for each rate cell would be multiplied by the number of BHP enrollees in that cell (that is, the number of enrollees that meet the criteria for each rate cell) to calculate the total monthly BHP payment. This calculation is shown in Equation (3).

$$\textbf{Equation (3)}: PMT = \sum \left[(PTC_{a,g,c,h,i} + CSR_{a,g,c,h,i}) \times E_{a,g,c,h,i} \right]$$

PMT = Total monthly BHP payment
$PTC_{a,g,c,h,i}$ = Premium tax credit portion of BHP payment rate
$CSR_{a,g,c,h,i}$ = Cost sharing reduction portion of BHP payment rate
$E_{a,g,c,h,i}$ = Number of BHP enrollees
a = Age range
g = Geographic area
c = Coverage status (self-only or applicable category of family coverage) obtained through BHP
h = Household size
i = Income range (as percentage of FPL)

In this equation, we would assign a value of zero to the CSR part of the BHP payment rate calculation ($CSR_{a,g,c,h,i}$) because there is presently no available appropriation from which we can make the CSR portion of any BHP payment. In the event that an appropriation for CSRs for 2022 is made, we would determine whether and how to modify the CSR part of the BHP payment rate calculation ($CSR_{a,g,c,h,i}$) or the PAF and the MTSF in the payment methodology.

B. Federal BHP Payment Rate Cells

Consistent with the previous payment methodologies, we propose that a state implementing a BHP provide us an estimate of the number of BHP enrollees it projects will enroll in the upcoming BHP program quarter, by applicable rate cell, prior to the first quarter and each subsequent quarter of program operations until actual enrollment data is available. Upon our approval of such estimates as reasonable, we will use those estimates to calculate the prospective payment for the first and subsequent quarters of program operation until the state provides us with actual enrollment data for those periods. The actual enrollment data is required to calculate the final BHP payment amount and make any necessary reconciliation adjustments to the prior quarters' prospective payment amounts due to differences between projected and actual enrollment. Subsequent quarterly deposits to the state's trust fund would be based on the most recent actual enrollment data

submitted to us. Actual enrollment data must be based on individuals enrolled for the quarter who the state found eligible and whose eligibility was verified using eligibility and verification requirements as agreed to by the state in its applicable BHP Blueprint for the quarter that enrollment data is submitted. Procedures will ensure that Federal payments to a state reflect actual BHP enrollment during a year, within each applicable category, and prospectively determined Federal payment rates for each category of BHP enrollment, with such categories defined in terms of age range (if applicable), geographic area, coverage status, household size, and income range, as explained above.

We propose requiring the use of certain rate cells as part of the proposed methodology. For each state, we propose using rate cells that separate the BHP population into separate cells based on the five factors described as follows:

Factor 1—Age: We propose to continue separating enrollees into rate cells by age (if applicable), using the following age ranges that capture the widest variations in premiums under HHS's Default Age Curve: [3]

- Ages 0–20.
- Ages 21–34.
- Ages 35–44.
- Ages 45–54.
- Ages 55–64.

This proposed provision is unchanged from the current methodology.[4]

Factor 2—Geographic area: For each state, we propose separating enrollees into rate cells by geographic areas within which a single RP is charged by QHPs offered through the state's Exchange. Multiple, non-contiguous geographic areas would be incorporated within a single cell, so long as those areas share a common RP.[5] This proposed provision is also unchanged from the current methodology.

Factor 3—Coverage status: We propose to continue separating enrollees into rate cells by coverage status, reflecting whether an individual is enrolled in self-only coverage or persons are enrolled in family coverage through the BHP, as provided in section 1331(d)(3)(A)(ii) of the Patient Protection and Affordable Care Act. Among recipients of family coverage through the BHP, separate rate cells, as explained below, would apply based on whether such coverage involves two adults alone or whether it involves children. This proposed provision is unchanged from the current methodology.

Factor 4—Household size: We propose to continue the current methods for separating enrollees into rate cells by household size that states use to determine BHP enrollees' household income as a percentage of the FPL under 42 CFR 600.320 (Determination of eligibility for and enrollment in a standard health plan). We propose to require separate rate cells for several specific household sizes. For each additional member above the largest specified size, we propose to publish instructions for how we would develop additional rate cells and calculate an appropriate payment rate based on data for the rate cell with the closest specified household size. We propose to publish separate rate cells for household sizes of 1 through 10. This proposed provision is unchanged from the current methodology.

Factor 5—Household income: For households of each applicable size, we propose to continue the current methods for creating separate rate cells by income range, as a percentage of FPL. The PTC that a person would receive if enrolled in a QHP through an Exchange varies by household income, both in level and as a ratio to the FPL. Thus, we propose that separate rate cells would be used to calculate Federal BHP payment rates to reflect different bands of income measured as a percentage of FPL. We propose using the following income ranges, measured as a percentage of the FPL:

- 0 to 50 percent of the FPL.
- 51 to 100 percent of the FPL.
- 101 to 138 percent of the FPL.[6]
- 139 to 150 percent of the FPL.
- 151 to 175 percent of the FPL.
- 176 to 200 percent of the FPL.

This proposed provision is unchanged from the current methodology.

These rate cells would only be used to calculate the Federal BHP payment amount. A state implementing a BHP would not be required to use these rate cells or any of the factors in these rate cells as part of the state payment to the standard health plans participating in the BHP or to help define BHP enrollees' covered benefits, premium costs, or out-of-pocket cost-sharing levels.

Consistent with the current methodology, we propose using averages to define Federal payment rates, both for income ranges and age ranges (if applicable), rather than varying such rates to correspond to each individual BHP enrollee's age (if applicable) and income level. We believe that the proposed approach will increase the administrative feasibility of making Federal BHP payments and reduce the likelihood of inadvertently erroneous payments resulting from highly complex methodologies. We also believe this approach should not significantly change Federal payment amounts, since within applicable ranges, the BHP-eligible population is distributed relatively evenly.

The number of factors contributing to rate cells, when combined, can result in over 350,000 rate cells which can increase the complexity when generating quarterly payment amounts. In future years, and in the interest of administrative simplification, we will consider whether to combine or eliminate certain rate cells, once we are certain that the effect on payment would be insignificant.

C. Sources and State Data Considerations

To the extent possible, unless otherwise provided, we intend to continue to use data submitted to the Federal Government by QHP issuers seeking to offer coverage through the

[3] This curve is used to implement the Patient Protection and Affordable Care Act's 3:1 limit on age-rating in states that do not create an alternative rate structure to comply with that limit. The curve applies to all individual market plans, both within and outside the Exchange. The age bands capture the principal allowed age-based variations in premiums as permitted by this curve. The default age curve was updated for plan or policy years beginning on or after January 1, 2018 to include different age rating factors between children 0–14 and for persons at each age between 15 and 20. More information is available at *https://www.cms.gov/CCIIO/Programs-and-Initiatives/Health-Insurance-Market-Reforms/Downloads/StateSpecAgeCrv053117.pdf.* Both children and adults under age 21 are charged the same premium. For adults age 21–64, the age bands in this methodology divide the total age-based premium variation into the three most equally-sized ranges (defining size by the ratio between the highest and lowest premiums within the band) that are consistent with the age-bands used for risk-adjustment purposes in the HHS-Developed Risk Adjustment Model. For such age bands, see HHS-Developed Risk Adjustment Model Algorithm ''Do It Yourself (DIY)'' Software Instructions for the 2018 Benefit Year, April 4, 2019 Update, *https://www.cms.gov/CCIIO/Resources/Regulations-and-Guidance/Downloads/Updated-CY2018-DIY-instructions.pdf.*

[4] In this document, references to the ''current methodology'' refer to the 2021 program year methodology as outlined in the August 2020 final BHP Payment Notice.

[5] For example, a cell within a particular state might refer to ''County Group 1,'' ''County Group 2,'' etc., and a table for the state would list all the counties included in each such group. These geographic areas are consistent with the geographic areas established under the 2014 Market Reform Rules. They also reflect the service area requirements applicable to QHPs, as described in 45 CFR 155.1055, except that service areas smaller than counties are addressed as explained in this methodology.

[6] The three lowest income ranges would be limited to lawfully present immigrants who are ineligible for Medicaid because of immigration status.

Exchange in the relevant BHP state to perform the calculations that determine Federal BHP payment cell rates.

States operating a State-based Exchange (SBE) in the individual market, however, must provide certain data, including premiums for second lowest cost silver plans, by geographic area, for CMS to calculate the Federal BHP payment rates in those states. We propose that a State-based Exchange interested in obtaining the applicable 2022 program year Federal BHP payment rates for its state must submit such data accurately, completely, and as specified by CMS, by no later than October 15, 2021. If additional state data (that is, in addition to the second lowest cost silver plan premium data) are needed to determine the Federal BHP payment rate, such data must be submitted in a timely manner, and in a format specified by us to support the development and timely release of annual BHP Payment Notices. The specifications for data collection to support the development of BHP payment rates are published in CMS guidance and are available in the Federal Policy Guidance section at *https://www.medicaid.gov/federal-policy-Guidance/index.html.*

States operating a BHP must submit enrollment data to us on a quarterly basis and should be technologically prepared to begin submitting data at the start of their BHP, starting with the beginning of the first program year. This differs from the enrollment estimates used to calculate the initial BHP payment, which states would generally submit to CMS 60 days before the start of the first quarter of the program start date. This requirement is necessary for us to implement the payment methodology that is tied to a quarterly reconciliation based on actual enrollment data.

We propose to continue the policy first adopted in the 2016 final BHP Payment Notice that in states that have BHP enrollees who do not file Federal tax returns (non-filers), the state must develop a methodology to determine the enrollees' household income and household size consistently with Marketplace requirements.[7] The state must submit this methodology to us at the time of their Blueprint submission. We reserve the right to approve or disapprove the state's methodology to determine household income and household size for non-filers if the household composition and/or household income resulting from application of the methodology are different than what typically would be expected to result if the individual or head of household in the family were to file a tax return. States currently operating a BHP that wish to change the methodology for non-filers must submit a revised Blueprint outlining the revisions to its methodology, consistent with § 600.125.

In addition, as the Federal payments are determined quarterly and the enrollment data is required to be submitted by the states to us quarterly, we propose that the quarterly payment would be based on the characteristics of the enrollee at the beginning of the quarter (or their first month of enrollment in the BHP in each quarter). Thus, if an enrollee were to experience a change in county of residence, household income, household size, or other factors related to the BHP payment determination during the quarter, the payment for the quarter would be based on the data as of the beginning of the quarter (or their first month of enrollment in the BHP in the applicable quarter). Payments would still be made only for months that the person is enrolled in and eligible for the BHP. We do not anticipate that this would have a significant effect on the Federal BHP payment. The states must maintain data that are consistent with CMS' verification requirements, including auditable records for each individual enrolled, indicating an eligibility determination and a determination of income and other criteria relevant to the payment methodology as of the beginning of each quarter.

Consistent with § 600.610 (Secretarial determination of BHP payment amount), the state is required to submit certain data in accordance with this methodology. We require that this data be collected and validated by states operating a BHP, and that this data be submitted to CMS.

D. Discussion of Specific Variables Used in Payment Equations

1. Reference Premium (RP)

To calculate the estimated PTC that would be paid if BHP-eligible individuals enrolled in QHPs through an Exchange, we must calculate a RP because the PTC is based, in part, on the premiums for the applicable second lowest cost silver plan as explained in section II.D.5. of this proposed methodology, regarding the premium tax credit formula (PTCF). The proposal is unchanged from the current methodology except to update the reference years, and to provide additional methodological details to simplify calculations and to deal with potential ambiguities. Accordingly, for the purposes of calculating the BHP payment rates, the RP, in accordance with 26 U.S.C. 36B(b)(3)(C), is defined as the adjusted monthly premium for an applicable second lowest cost silver plan. The applicable second lowest cost silver plan is defined in 26 U.S.C. 36B(b)(3)(B) as the second lowest cost silver plan of the individual market in the rating area in which the taxpayer resides that is offered through the same Exchange. We propose to use the adjusted monthly premium for an applicable second lowest cost silver plan in the applicable program year (2022) as the RP (except in the case of a state that elects to use the prior plan year's premium as the basis for the Federal BHP payment for 2022, as described in section II.E. of this proposed methodology).

The RP would be the premium applicable to non-tobacco users. This is consistent with the provision in 26 U.S.C. 36B(b)(3)(C) that bases the PTC on premiums that are adjusted for age alone, without regard to tobacco use, even for states that allow insurers to vary premiums based on tobacco use in accordance with 42 U.S.C. 300gg(a)(1)(A)(iv).

Consistent with the policy set forth in 26 CFR 1.36B–3(f)(6), to calculate the PTC for those enrolled in a QHP through an Exchange, we propose not to update the payment methodology, and subsequently the Federal BHP payment rates, in the event that the second lowest cost silver plan used as the RP, or the lowest cost silver plan, changes (that is, terminates or closes enrollment during the year).

The applicable second lowest cost silver plan premium will be included in the BHP payment methodology by age range (if applicable), geographic area, and self-only or applicable category of family coverage obtained through the BHP.

We note that the choice of the second lowest cost silver plan for calculating BHP payments would rely on several simplifying assumptions in its selection. For the purposes of determining the second lowest cost silver plan for calculating PTC for a person enrolled in a QHP through an Exchange, the applicable plan may differ for various reasons. For example, a different second lowest cost silver plan may apply to a family consisting of two adults, their child, and their niece than to a family with two adults and their children, because one or more QHPs in the family's geographic area might not offer family coverage that includes the niece. We believe that it would not be possible to replicate such variations for calculating the BHP payment and

[7] See 81 FR at 10097.

believe that in the aggregate, they would not result in a significant difference in the payment. Thus, we propose to use the second lowest cost silver plan available to any enrollee for a given age, geographic area, and coverage category.

This choice of RP relies on an assumption about enrollment in the Exchanges. In the payment methodologies for program years 2015 through 2019, we had assumed that all persons enrolled in the BHP would have elected to enroll in a silver level plan if they had instead enrolled in a QHP through an Exchange (and that the QHP premium would not be lower than the value of the PTC). In the November 2019 final BHP Payment Notice, we continued to use the second-lowest cost silver plan premium as the RP, but for the 2020 payments we changed the assumption about which metal tier plans enrollees would choose (see section II.D.6. on the MTSF in this proposed methodology). In the 2021 payment methodology, we continued to account for how enrollees may choose other metal tier plans by applying the MTSF. For the 2022 payment methodology, we propose to continue accounting for how enrollees may choose other metal tier plans by proposing the continued application of the MTSF as described in section II.D.6. of this proposed methodology.

We do not believe it is appropriate to adjust the payment for an assumption that some BHP enrollees would not have enrolled in QHPs for purposes of calculating the BHP payment rates, since section 1331(d)(3)(A)(ii) of the Patient Protection and Affordable Care Act requires the calculation of such rates as if the enrollee had enrolled in a QHP through an Exchange.

The applicable age bracket (if any) will be one dimension of each rate cell. We propose to assume a uniform distribution of ages and estimate the average premium amount within each rate cell. We believe that assuming a uniform distribution of ages within these ranges is a reasonable approach and would produce a reliable determination of the total monthly payment for BHP enrollees. We also believe this approach would avoid potential inaccuracies that could otherwise occur in relatively small payment cells if age distribution were measured by the number of persons eligible or enrolled.

We propose to use geographic areas based on the rating areas used in the Exchanges. We propose to define each geographic area so that the RP is the same throughout the geographic area. When the RP varies within a rating area, we propose defining geographic areas as aggregations of counties with the same RP. Although plans are allowed to serve geographic areas smaller than counties after obtaining our approval, we propose that no geographic area, for purposes of defining BHP payment rate cells, will be smaller than a county. We do not believe that this assumption will have a significant impact on Federal payment levels and it would simplify both the calculation of BHP payment rates and the operation of the BHP.

Finally, in terms of the coverage category, we propose that Federal payment rates only recognize self-only and two-adult coverage, with exceptions that account for children who are potentially eligible for the BHP. First, in states that set the upper income threshold for children's Medicaid and CHIP eligibility below 200 percent of FPL (based on modified adjusted gross income (MAGI)), children in households with incomes between that threshold and 200 percent of FPL would be potentially eligible for the BHP. Currently, the only states in this category are Idaho and North Dakota.[8] Second, the BHP would include lawfully present immigrant children with household incomes at or below 200 percent of FPL in states that have not exercised the option under sections 1903(v)(4)(A)(ii) and 2107(e)(1)(E) of the Act to qualify all otherwise eligible, lawfully present immigrant children for Medicaid and CHIP. States that fall within these exceptions would be identified based on their Medicaid and CHIP State Plans, and the rate cells would include appropriate categories of BHP family coverage for children. For example, Idaho's Medicaid and CHIP eligibility is limited to families with MAGI at or below 185 percent FPL. If Idaho implemented a BHP, Idaho children with household incomes between 185 and 200 percent could qualify. In other states, BHP eligibility will generally be restricted to adults, since children who are citizens or lawfully present immigrants and live in households with incomes at or below 200 percent of FPL will qualify for Medicaid or CHIP, and thus be ineligible for a BHP under section 1331(e)(1)(C) of the Patient Protection and Affordable Care Act, which limits a BHP to individuals who are ineligible for minimum essential coverage (as defined in 26 U.S.C. 5000A(f)).

2. Premium Adjustment Factor (PAF)

The PAF considers the premium increases in other states that took effect after we discontinued payments to issuers for CSRs provided to enrollees in QHPs offered through Exchanges. Despite the discontinuance of Federal payments for CSRs, QHP issuers are required to provide CSRs to eligible enrollees. As a result, many QHP issuers increased the silver-level plan premiums to account for those additional costs; adjustments and how those were applied (for example, to only silver-level plans or to all metal tier plans) varied across states. For the states operating BHPs in 2018, the increases in premiums were relatively minor, because the majority of enrollees eligible for CSRs (and all who were eligible for the largest CSRs) were enrolled in the BHP and not in QHPs on the Exchanges, and therefore issuers in BHP states did not significantly raise premiums to cover unpaid CSR costs.

In the Final Administrative Order, the November 2019 final BHP Payment Notice, and the August 2020 final BHP Payment Notice, we incorporated the PAF into the BHP payment methodologies for 2018, 2019, 2020, and 2021 to capture the impact of how other states responded to us ceasing to pay CSRs. We propose to include the PAF in the 2022 payment methodology and to calculate it in the same manner as in the Final Administrative Order. In the event that an appropriation for CSRs for 2022 is made, we would determine whether and how to modify the PAF in the payment methodology.

Under the Final Administrative Order, we calculated the PAF by using information sought from QHP issuers in each state and the District of Columbia, and determined the premium adjustment that the responding QHP issuers made to each silver level plan in 2018 to account for the discontinuation of CSR payments to QHP issuers. Based on the data collected, we estimated the median adjustment for silver level QHPs nationwide (excluding those in the two BHP states). To the extent that QHP issuers made no adjustment (or the adjustment was zero), this would be counted as zero in determining the median adjustment made to all silver level QHPs nationwide. If the amount of the adjustment was unknown—or we determined that it should be excluded for methodological reasons (for example, the adjustment was negative, an outlier, or unreasonable)—then we did not count the adjustment towards determining the median adjustment.[9] The median adjustment for silver level

[8] CMCS. ''State Medicaid, CHIP and BHP Income Eligibility Standards Effective October 1, 2020.''

[9] Some examples of outliers or unreasonable adjustments include (but are not limited to) values over 100 percent (implying the premiums doubled or more as a result of the adjustment), values more than double the otherwise highest adjustment, or non-numerical entries.

QHPs is the nationwide median adjustment.

For each of the two BHP states, we determined the median premium adjustment for all silver level QHPs in that state, which we refer to as the state median adjustment. The PAF for each BHP state equaled one plus the nationwide median adjustment divided by one plus the state median adjustment for the BHP state. In other words,

PAF = (1 + Nationwide Median Adjustment) ÷ (1 + State Median Adjustment)

To determine the PAF described above, we sought to collect QHP information from QHP issuers in each state and the District of Columbia to determine the premium adjustment those issuers made to each silver level plan offered through the Exchange in 2018 to account for the end of CSR payments. Specifically, we sought information showing the percentage change that QHP issuers made to the premium for each of their silver level plans to cover benefit expenditures associated with the CSRs, given the lack of CSR payments in 2018. This percentage change was a portion of the overall premium increase from 2017 to 2018.

According to our records, there were 1,233 silver-level QHPs operating on Exchanges in 2018. Of these 1,233 QHPs, 318 QHPs (25.8 percent) responded to our request for the percentage adjustment applied to silver-level QHP premiums in 2018 to account for the discontinuance of the CSRs. These 318 QHPs operated in 26 different states, with 10 of those states running State-based Exchanges (SBEs) (while we requested information only from QHP issuers in states serviced by an FFE, many of those issuers also had QHPs in states operating SBEs and submitted information for those states as well). Thirteen of these 318 QHPs were in New York (and none were in Minnesota). Excluding these 13 QHPs from the analysis, the nationwide median adjustment was 20.0 percent. Of the 13 QHPs in New York that responded, the state median adjustment was 1.0 percent. We believe that this is an appropriate adjustment for QHPs in Minnesota, as well, based on the observed changes in New York's QHP premiums in response to the discontinuance of CSR payments (and the operation of the BHP in that state) and our analysis of expected QHP premium adjustments for states with BHPs. We calculated the proposed PAF as (1 + 20%) ÷ (1 + 1%) (or 1.20/1.01), which results in a value of 1.188.

We propose that the PAF continue to be set to 1.188 for program year 2022. We believe that this value for the PAF continues to reasonably account for the increase in silver-level premiums experienced in non-BHP states that took effect after the discontinuance of the CSR payments. We believe that the impact of the increase in silver-level premiums in 2022 can reasonably be expected to be similar to that in 2018, because the discontinuation of CSR payments has not changed. Moreover, we believe that states and QHP issuers have not significantly changed the manner and degree to which they are increasing QHP silver-level premiums to account for the discontinuation of CSR payments since 2018, and we expect the same for 2022.

In addition, the percentage difference between the average second lowest-cost silver level QHP and the bronze-level QHP premiums has not changed significantly since 2018, and we do not expect a significant change for 2022. In 2018, the average second lowest-cost silver level QHP premium was 41.1 percent higher than the average lowest-cost bronze-level QHP premium ($481 and $341, respectively). In 2020 (the latest year for which premiums have been published), the difference is similar; the average second lowest-cost silver-level QHP premium is 39.6 percent higher than the average lowest-cost bronze-level QHP premium ($462 and $331, respectively).[10] In contrast, the average second lowest-cost silver-level QHP premium was only 23.8 percent higher than the average lowest-cost bronze-level QHP premium in 2017 ($359 and $290, respectively).[11] If there were a significant difference in the amounts that QHP issuers were increasing premiums for silver-level QHPs to account for the discontinuation of CSR payments over time, then we would expect the difference between the bronze-level and silver-level QHP premiums to change significantly over time, and that this would be apparent in comparing the lowest-cost bronze-level QHP premium to the second lowest-cost silver-level QHP premium.

We request comments on our proposal that the PAF continue to be set to 1.188 for program year 2022. We request comments on whether sources of data other than what we sought in 2018 are available to account for the adjustment to the silver-level QHP premiums to account for the discontinuation of CSRs beyond 2018.

We also generally seek comment on what impact (if any) the recent court decisions[12] regarding the government's obligation to make CSR payments may have on the observed trends regarding adjustments to the silver-level QHP premiums to account for the discontinuation of CSRs, as well as the potential continuation of these trends for the 2022 plan year. We also generally seek comment on whether, in the event an appropriation for CSRs for 2022 is made, we should determine if and how to modify the PAF in the payment methodology, including whether to eliminate it in light of the purpose for which it was initially included in the payment methodology.

3. Population Health Factor (PHF)

We propose that the PHF be included in the methodology to account for the potential differences in the average health status between BHP enrollees and persons enrolled through the Exchanges. To the extent that BHP enrollees would have been enrolled through an Exchange in the absence of a BHP in a state, the exclusion of those BHP enrollees in the Exchange may affect the average health status of the overall population and the expected QHP premiums.

We currently do not believe that there is evidence that the BHP population would have better or poorer health status than the Exchange population. At this time, there continues to be a lack of data on the experience in the Exchanges that limits the ability to analyze the potential health differences between these groups of enrollees. More specifically, Exchanges have been in operation since 2014, and 2 states have operated BHPs since 2015, but data is not available to do the analysis necessary to determine if there are differences in the average health status between BHP and Exchange enrollees. In addition, differences in population health may vary across states. We also do not believe that sufficient data would be available to permit us to make a prospective adjustment to the PHF under § 600.610(c)(2) for the 2022 program year.

Given these analytic challenges and the limited data about Exchange coverage and the characteristics of BHP-eligible consumers, we propose that the PHF continue to be 1.00 for program year 2022.

[10] *See* Kaiser Family Foundation, ''Average Marketplace Premiums by Metal Tier, 2018–2020,'' *https://www.kff.org/health-reform/state-indicator/average-marketplace-premiums-by-metal-tier/.*

[11] See Basic Health Program: Federal Funding Methodology for Program Years 2019 and 2020; Final Methodology, 84 FR 59529 at 59532 (November 5, 2019).

[12] See *Sanford Health Plan* v. *United States,* 969 F.3d 1370 (Fed. Cir. 2020) and *Community Health Choice, Inc.* v. *United States,* 970 F.3d 1364 (Fed. Cir. 2020).

In previous years BHP payment methodologies, we included an option for states to include a retrospective population health status adjustment. We propose that states be provided with the same option for 2022 to include a retrospective population health status adjustment in the certified methodology, which is subject to our review and approval. This option is described further in section II.F. of this proposed methodology. Regardless of whether a state elects to include a retrospective population health status adjustment, we anticipate that, in future years, when additional data becomes available about Exchange coverage and the characteristics of BHP enrollees, we may propose a different PHF.

While the statute requires consideration of risk adjustment payments and reinsurance payments insofar as they would have affected the PTC that would have been provided to BHP-eligible individuals had they enrolled in QHPs, we are not proposing to require that a BHP's standard health plans receive such payments. As explained in the BHP final rule, BHP standard health plans are not included in the federally-operated risk adjustment program.[13] Further, standard health plans did not qualify for payments under the transitional reinsurance program established under section 1341 of the Patient Protection and Affordable Care Act for the years the program was operational (2014 through 2016).[14] To the extent that a state operating a BHP determines that, because of the distinctive risk profile of BHP-eligible consumers, BHP standard health plans should be included in mechanisms that share risk with other plans in the state's individual market, the state would need to use other methods for achieving this goal.

4. Household Income (I)

Household income is a significant determinant of the amount of the PTC that is provided for persons enrolled in a QHP through an Exchange. Accordingly, both the current and proposed BHP payment methodologies incorporate household income into the calculations of the payment rates through the use of income-based rate cells. We propose defining household income in accordance with the definition of modified adjusted gross income in 26 U.S.C. 36B(d)(2)(B) and consistent with the definition in 45 CFR 155.300. Income would be measured relative to the FPL, which is updated periodically in the **Federal Register** by the Secretary under the authority of 42 U.S.C. 9902(2). In our proposed methodology, household size and income as a percentage of FPL would be used as factors in developing the rate cells. We propose using the following income ranges measured as a percentage of FPL:[15]

- 0–50 percent.
- 51–100 percent.
- 101–138 percent.
- 139–150 percent.
- 151–175 percent.
- 176–200 percent.

We further propose to assume a uniform income distribution for each Federal BHP payment cell. We believe that assuming a uniform income distribution for the income ranges proposed would be reasonably accurate for the purposes of calculating the BHP payment and would avoid potential errors that could result if other sources of data were used to estimate the specific income distribution of persons who are eligible for or enrolled in the BHP within rate cells that may be relatively small.

Thus, when calculating the mean, or average, PTC for a rate cell, we propose to calculate the value of the PTC at each one percentage point interval of the income range for each Federal BHP payment cell and then calculate the average of the PTC across all intervals. This calculation would rely on the PTC formula described in section II.D.5. of this proposed methodology.

As the APTC for persons enrolled in QHPs would be calculated based on their household income during the open enrollment period, and that income would be measured against the FPL at that time, we propose to adjust the FPL by multiplying the FPL by a projected increase in the CPI–U between the time that the BHP payment rates are calculated and the QHP open enrollment period, if the FPL is expected to be updated during that time. We propose that the projected increase in the CPI–U would be based on the intermediate inflation forecasts from the most recent OASDI and Medicare Trustees Reports.[16]

5. Premium Tax Credit Formula (PTCF)

In Equation 1 described in section II.A.1. of this proposed methodology, we propose to use the formula described in 26 U.S.C. 36B(b) to calculate the estimated PTC that would be paid on behalf of a person enrolled in a QHP on an Exchange as part of the BHP payment methodology. This formula is used to determine the contribution amount (the amount of premium that an individual or household theoretically would be required to pay for coverage in a QHP on an Exchange), which is based on (A) the household income; (B) the household income as a percentage of FPL for the family size; and (C) the schedule specified in 26 U.S.C. 36B(b)(3)(A) and shown below.

The difference between the contribution amount and the adjusted monthly premium (that is, the monthly premium adjusted for the age of the enrollee) for the applicable second lowest cost silver plan is the estimated amount of the PTC that would be provided for the enrollee.

The PTC amount provided for a person enrolled in a QHP through an Exchange is calculated in accordance with the methodology described in 26 U.S.C. 36B(b)(2). The amount is equal to the lesser of the premium for the plan in which the person or household enrolls, or the adjusted premium for the applicable second lowest cost silver plan minus the contribution amount.

The applicable percentage is defined in 26 U.S.C. 36B(b)(3)(A) and 26 CFR 1.36B–3(g) as the percentage that applies to a taxpayer's household income that is within an income tier specified in Table 1, increasing on a sliding scale in a linear manner from an initial premium percentage to a final premium percentage specified in Table 1. We propose to continue to use applicable percentages to calculate the estimated PTC that would be paid on behalf of a person enrolled in a QHP on an Exchange as part of the BHP payment methodology as part of Equation 1. We propose that the applicable percentages in Table 1 for calendar year (CY) 2021 would be effective for BHP program year 2022. The applicable percentages will be updated in future years in accordance with 26 U.S.C. 36B(b)(3)(A)(ii).

[13] See 79 FR at 14131.

[14] See 45 CFR 153.400(a)(2)(iv) (BHP standard health plans are not required to submit reinsurance contributions), 153.20 (definition of ''Reinsurance-eligible plan'' as not including ''health insurance coverage not required to submit reinsurance contributions''), 153.230(a) (reinsurance payments under the national reinsurance parameters are available only for ''Reinsurance-eligible plans'').

[15] These income ranges and this analysis of income apply to the calculation of the PTC.

[16] *See* Table IV A1 from the 2020 Annual Report of the Boards of Trustees of the Federal Hospital Insurance and Federal Supplementary Medical Insurance Trust Funds, available at *https://www.cms.gov/files/document/2020-medicare-trustees-report.pdf.*

TABLE 1—APPLICABLE PERCENTAGE TABLE FOR CY 2021 [a]

In the case of household income (expressed as a percent of poverty line) within the following income tier:	The initial premium percentage is—	The final premium percentage is—
Up to 133%	2.07	2.07
133% but less than 150%	3.10	4.14
150% but less than 200%	4.14	6.52
200% but less than 250%	6.52	8.33
250% but less than 300%	8.33	9.83
300% but not more than 400%	9.83	8.83

[a] IRS Revenue Procedure 2020–36. *https://www.irs.gov/pub/irs-drop/rp-20–36.pdf.*

6. Metal Tier Selection Factor (MTSF)

On the Exchange, if an enrollee chooses a QHP and the value of the APTC to which the enrollee is entitled is greater than the premium of the plan selected, then the APTC is reduced to be equal to the premium. This usually occurs when enrollees eligible for larger APTCs choose bronze-level QHPs, which typically have lower premiums on the Exchange than silver-level QHPs. Prior to 2018, we believed that the impact of these choices and plan selections on the amount of PTCs that the Federal Government paid was relatively small. During this time, most enrollees in income ranges up to 200 percent FPL chose silver-level QHPs, and in most cases where enrollees chose bronze-level QHPs, the premium was still more than the PTC. Based on our analysis of the percentage of persons with incomes below 200 percent FPL choosing bronze-level QHPs and the average reduction in the PTCs paid for those enrollees, we believe that the total PTCs paid for persons with incomes below 200 percent FPL were reduced by about 1 percent in 2017. Therefore, we did not seek to make an adjustment based on the effect of enrollees choosing non-silver-level QHPs in developing the BHP payment methodology applicable to program years prior to 2018. However, after the discontinuance of the CSR payments in October 2017, several changes occurred that increased the expected impact of enrollees' plan selection choices on the amount of PTC the government paid. These changes led to a larger percentage of individuals choosing bronze-level QHPs, and for those individuals who chose bronze-level QHPs, these changes also generally led to larger reductions in PTCs paid by the Federal Government per individual. The combination of more individuals with incomes below 200 percent of FPL choosing bronze-level QHPs and the reduction in PTCs had an impact on PTCs paid by the Federal Government for enrollees with incomes below 200 percent FPL.

Silver-level QHP premiums for the 2018 benefit year increased substantially relative to other metal tier plans in many states (on average, by about 20 percent). We believe this contributed to an increase in the percentage of enrollees with lower incomes choosing bronze-level QHPs, despite being eligible for CSRs in silver-level QHPs, because many were able to purchase bronze-level QHPs and pay $0 in premium; according to CMS data, the percentage of persons with incomes between 0 percent and 200 percent of FPL eligible for CSRs (those who would be eligible for the BHP if the state operated a BHP) selecting bronze-level QHPs increased from about 11 percent in 2017 to about 13 percent in 2018. In addition, the likelihood that a person choosing a bronze-level QHP would pay $0 premium increased, and the difference between the bronze-level QHP premium and the available PTC widened. Between 2017 and 2018, the ratio of the average silver-level QHP premium to the average bronze-level QHP premium increased: The average silver-level QHP premium was 17 percent higher than the average bronze-level QHP premium in 2017, whereas the average silver-level QHP premium was 33 percent higher than the average bronze-level QHP premium in 2018. Similarly, the average estimated reduction in APTC for enrollees with incomes between 0 percent and 200 percent FPL that chose bronze-level QHPs increased from about 11 percent in 2017 to about 23 percent in 2018 (after adjusting for the average age of bronze-level QHP and silver-level QHP enrollees); that is, in 2017, enrollees with incomes in this range who chose bronze-level QHPs received 11 percent less than the full value of the APTC, and in 2018, those enrollees who chose bronze-level QHPs received 23 percent less than the full value of the APTC.

The discontinuance of the CSR payments led to increases in silver-level QHP premiums (and thus in the total potential PTCs), but did not generally increase the bronze-level QHP premiums in most states; we believe this is the primary reason for the increase in the percentage reduction in PTCs paid by the government for those who enrolled in bronze-level QHPs between 2017 and 2018. Therefore, we now believe that the impacts on the amount of PTC the government would pay due to enrollees' plan selection choices are larger and thus more significant, and we are proposing to include an adjustment (the MTSF) in the BHP payment methodology to account for the effects of these choices. Section 1331(d)(3) of the Patient Protection and Affordable Care Act requires that the BHP payments to states be based on what would have been provided if such eligible individuals were allowed to enroll in QHPs, and we believe that it is appropriate to consider how individuals would have chosen different plans—including across different metal tiers—as part of the BHP payment methodology.

We finalized the application of the MTSF for the first time in the 2020 payment methodology, and here we propose to calculate the MTSF using the same approach as finalized there (84 FR 59543). First, we would calculate the percentage of enrollees with incomes below 200 percent of the FPL (those who would be potentially eligible for the BHP) in non-BHP states who enrolled in bronze-level QHPs. Second, we would calculate the ratio of the average PTC paid for enrollees in this income range who selected bronze-level QHPs compared to the average PTC paid for enrollees in the same income range who selected silver-level QHPs. Both of these calculations would be done using CMS data on Exchange enrollment and payments. For 2022, we propose to use 2019 data, as it is the latest year of data available at this time. In the 2021 final BHP Payment Notice, we used 2018 data, as it was the latest year of data available at that time.

The MTSF would then be set to the value of 1 minus the product of the percentage of enrollees who chose bronze-level QHPs and 1 minus the ratio of the average PTC paid for enrollees in bronze-level QHPs to the average PTC paid for enrollees in silver-level QHPs:

MTSF = 1 − (percentage of enrollees in bronze-level QHPs × (1 − average PTC paid for bronze-level QHP enrollees/average PTC paid for silver-level QHP enrollees))

We have calculated that 16.14 percent of enrollees in households with incomes below 200 percent of the FPL selected bronze-level QHPs in 2019. We also have calculated that the ratio of the average PTC paid for those enrollees in bronze-level QHPs to the average PTCs paid for enrollees in silver-level QHPs was 79.41 percent after adjusting for the average age of bronze-level and silver-level QHP enrollees. The MTSF is equal to 1 minus the product of the percentage of enrollees in bronze-level QHPs (16.14 percent) and 1 minus the ratio of the average PTC paid for bronze-level QHP enrollees to the average PTC paid for silver-level QHP enrollees (79.41 percent). Thus, the MTSF would be calculated as:

MTSF = 1 − (16.14% × (1 − 79.41%))

Therefore, we propose that the value of the MTSF for 2022 would be 96.68 percent.

We believe it is reasonable to update the value for the MTSF from the value that was used in the 2021 payment methodology. In general, we believe it is appropriate to update the calculation of the MTSF (and other factors) as more recent data becomes available. At this time, we have complete data for 2019, and only for several months of 2020. Therefore, we propose to use 2019 data to calculate the 2022 MTSF. Therefore, we believe that our proposal to update the value of the MTSF to 96.68 percent is reasonable for program year 2022.

We request comments on this proposal. In particular, we welcome comments on whether other sources of data beyond 2019 are available and should be used to calculate the MTSF for 2022. One potential alternative would be to update the MTSF with partial 2020 data collected by CMS for Exchange plan selection and enrollment (by income and by metal tier selection) and for APTC paid for 2021 (based on the number of months available at the time the final payment methodology is published).

We also seek comment on what impact (if any) the recent court decisions [17] regarding the government's obligation to make CSR payments may have on the observed trends regarding adjustments to the silver-level QHP premiums to account for the discontinuation of CSRs and consumer plan selection behaviors, as well as the potential continuation of these trends for the 2022 plan year. We also seek comment on the potential for Congressional action on CSR appropriations.

7. Income Reconciliation Factor (IRF)

For persons enrolled in a QHP through an Exchange who receive APTC, there will be an annual reconciliation following the end of the year to compare the APTC to the correct amount of PTC based on household circumstances shown on the Federal income tax return. Any difference between the latter amounts and the APTC paid during the year would either be paid to the taxpayer (if too little APTC was paid) or charged to the taxpayer as additional tax (if too much APTC was paid, subject to any limitations in statute or regulation), as provided in 26 U.S.C. 36B(f).

Section 1331(e)(2) of the Patient Protection and Affordable Care Act specifies that an individual eligible for the BHP may not be treated as a ''qualified individual'' under section 1312 of the Patient Protection and Affordable Care Act who is eligible for enrollment in a QHP offered through an Exchange. We are defining ''eligible'' to mean anyone for whom the state agency or the Exchange assesses or determines, based on the single streamlined application or renewal form, as eligible for enrollment in the BHP. Because enrollment in a QHP is a requirement for individuals to receive APTC, individuals determined or assessed as eligible for a BHP are not eligible to receive APTC for coverage in the Exchange. Because they do not receive APTC, BHP enrollees, on whom the BHP payment methodology is generally based, are not subject to the same income reconciliation as Exchange consumers.

Nonetheless, there may still be differences between a BHP enrollee's household income reported at the beginning of the year and the actual household income over the year. These may include small changes (reflecting changes in hourly wage rates, hours worked per week, and other fluctuations in income during the year) and large changes (reflecting significant changes in employment status, hourly wage rates, or substantial fluctuations in income). There may also be changes in household composition. Thus, we believe that using unadjusted income as reported prior to the BHP program year may result in calculations of estimated PTC that are inconsistent with the actual household incomes of BHP enrollees during the year. Even if the BHP adjusts household income determinations and corresponding claims of Federal payment amounts based on household reports during the year or data from third-party sources, such adjustments may not fully capture the effects of tax reconciliation that BHP enrollees would have experienced had they been enrolled in a QHP through an Exchange and received APTC.

Therefore, in accordance with current practice, we propose including in Equation 1 an adjustment, the IRF, that would account for the difference between calculating estimated PTC using: (a) Household income relative to FPL as determined at initial application and potentially revised mid-year under § 600.320, for purposes of determining BHP eligibility and claiming Federal BHP payments; and (b) actual household income relative to FPL received during the plan year, as it would be reflected on individual Federal income tax returns. This adjustment would seek prospectively to capture the average effect of income reconciliation aggregated across the BHP population had those BHP enrollees been subject to tax reconciliation after receiving APTC for coverage provided through QHPs. Consistent with the methodology used in past years, we propose estimating reconciliation effects based on tax data for 2 years, reflecting income and tax unit composition changes over time among BHP-eligible individuals.

The OTA maintains a model that combines detailed tax and other data, including Exchange enrollment and PTC claimed, to project Exchange premiums, enrollment, and tax credits. For each enrollee, this model compares the APTC based on household income and family size estimated at the point of enrollment with the PTC based on household income and family size reported at the end of the tax year. The former reflects the determination using enrollee information furnished by the applicant and tax data furnished by the IRS. The latter would reflect the PTC eligibility based on information on the tax return, which would have been determined if the individual had not enrolled in the BHP. Consistent with prior years, we propose to use the ratio of the reconciled PTC to the initial estimation of PTC as the IRF in Equations (1a) and (1b) for estimating the PTC portion of the BHP payment rate.

For 2022, OTA has estimated that the IRF for states that have implemented the Medicaid eligibility expansion to cover adults up to 133 percent of the FPL will be 99.01 percent. We believe that it is appropriate to refine the calculation of the IRF and only use data regarding

[17] See *Sanford Health Plan* v. *United States,* 969 F.3d 1370 (Fed. Cir. 2020) and *Community Health Choice, Inc.* v. *United States,* 970 F.3d 1364 (Fed. Cir. 2020).

Exchange enrollees with incomes between 133 percent and 200 percent FPL, as in Medicaid expansion states, instead of an average that also includes data regarding Exchange enrollees with incomes between 100 percent and 200 percent FPL, as in non-Medicaid expansion states. This is the same approach that we finalized in the 2021 BHP Payment Notice. For other factors used in the BHP payment methodology, it may not always be possible to separate the experiences between different types of states and there may not be meaningful differences between the experiences of such states. Therefore, we propose to set the value of the IRF equal to the value of the IRF for states that have expanded Medicaid eligibility, which would be 99.01 percent for program year 2022.

We propose to use this value for the IRF in Equations (1a) and (1b) for calculating the PTC portion of the BHP payment rate.

E. State Option To Use Prior Program Year QHP Premiums for BHP Payments

In the interest of allowing states greater certainty in the total BHP Federal payments for a given plan year, we have given states the option to have their final Federal BHP payment rates calculated using a projected ARP (that is, using premium data from the prior program year multiplied by the premium trend factor (PTF), as described in Equation (2b). We propose to require states to make their election to have their final Federal BHP payment rates calculated using a projected ARP by the later of (1) May 15 of the year preceding the applicable program year or (2) 60 days after the publication of the final methodology. Therefore, we propose states inform CMS in writing of their election for the 2022 program year by the later of May 15, 2021 or 60 days after the publication of the final methodology.

For Equation (2b), we propose to continue to define the PTF, with minor proposed changes in calculation sources and methods, as follows:

PTF: In the case of a state that would elect to use the 2021 premiums as the basis for determining the 2022 BHP payment, it would be appropriate to apply a factor that would account for the change in health care costs between the year of the premium data and the BHP program year. This factor would approximate the change in health care costs per enrollee, which would include, but not be limited to, changes in the price of health care services and changes in the utilization of health care services. This would provide an estimate of the adjusted monthly premium for the applicable second lowest cost silver plan that would be more accurate and reflective of health care costs in the BHP program year.

For the PTF we propose to use the annual growth rate in private health insurance expenditures per enrollee from the National Health Expenditure (NHE) projections, developed by the Office of the Actuary in CMS (*https://www.cms.gov/Research-Statistics-Data-and-Systems/Statistics-Trends-and-Reports/NationalHealthExpendData/NationalHealthAccountsProjected.html*). Based on these projections, for BHP program year 2022, we propose that the PTF would be 4.7 percent.

We note that the increase in premiums for QHPs from 1 year to the next may differ from the PTF developed for the BHP funding methodology for several reasons. In particular, we note that the second lowest cost silver plan may be different from one year to the next. This may lead to the PTF being greater than or less than the actual change in the premium of the second lowest cost silver plan.

F. State Option To Include Retrospective State-Specific Health Risk Adjustment in Certified Methodology

To determine whether the potential difference in health status between BHP enrollees and consumers in an Exchange would affect the PTC and risk adjustment payments that would have otherwise been made had BHP enrollees been enrolled in coverage through an Exchange, we propose to continue to provide states implementing the BHP the option to propose and to implement, as part of the certified methodology, a retrospective adjustment to the Federal BHP payments to reflect the actual value that would be assigned to the population health factor (or risk adjustment) based on data accumulated during that program year for each rate cell.

We acknowledge that there is uncertainty with respect to this factor due to the lack of available data to analyze potential health differences between the BHP and QHP populations, which is why, absent a state election, we propose to use a value for the PHF (see section II.D.3. of this proposed methodology) to determine a prospective payment rate which assumes no difference in the health status of BHP enrollees and QHP enrollees. There is considerable uncertainty regarding whether the BHP enrollees will pose a greater risk or a lesser risk compared to the QHP enrollees, how to best measure such risk, the potential effect such risk would have had on PTC, and risk adjustment that would have otherwise been made had BHP enrollees been enrolled in coverage through an Exchange. To the extent, however, that a state would develop an approved protocol to collect data and effectively measure the relative risk and the effect on Federal payments of PTCs and CSRs, we propose to continue to permit a retrospective adjustment that would measure the actual difference in risk between the two populations to be incorporated into the certified BHP payment methodology and used to adjust payments in the previous year.

For a state electing the option to implement a retrospective population health status adjustment as part of the BHP payment methodology applicable to the state, we propose requiring the state to submit a proposed protocol to CMS, which would be subject to approval by us and would be required to be certified by the Chief Actuary of CMS, in consultation with the OTA. We propose to apply the same protocol for the population health status adjustment as what is set forth in guidance in *Considerations for Health Risk Adjustment in the Basic Health Program in Program Year 2015* (*http://www.medicaid.gov/Basic-Health-Program/Downloads/Risk-Adjustment-and-BHP-White-Paper.pdf*). We propose requiring a state to submit its proposed protocol for the 2022 program year by August 1, 2021 or 60 days after the publication of the final methodology. We propose that this submission would also need to include descriptions of how the state would collect the necessary data to determine the adjustment, including any contracting contingences that may be in place with participating standard health plan issuers. We would provide technical assistance to states as they develop their protocols, as requested. To implement the population health status adjustment, we propose that we must approve the state's protocol by December 31, 2021 for the 2022 program year. Finally, we propose that the state be required to complete the population health status adjustment at the end of the program year based on the approved protocol. After the end of the program year, and once data is made available, we propose to review the state's findings, consistent with the approved protocol, and make any necessary adjustments to the state's Federal BHP payment amounts. If we determine that the Federal BHP payments were less than they would have been using the final adjustment factor, we would apply the difference to the state's next quarterly BHP trust fund

deposit. If we determine that the Federal BHP payments were more than they would have been using the final reconciled factor, we would subtract the difference from the next quarterly BHP payment to the state.

III. Collection of Information Requirements

Although our Federal funding methodology's information collection requirements and burden had at one time been approved by OMB under control number 0938–1218 (CMS–10510), the approval was discontinued on August 31, 2017, since we adjusted our estimated number of respondents to be below the Paperwork Reduction Act of 1995 (PRA) (44 U.S.C. 3501 *et seq.*) threshold of ten or more respondents. Since we continue to estimate fewer than ten respondents (only New York and Minnesota operate a BHP at this time), the proposed program year 2022 methodology is not subject to the requirements of the PRA.

IV. Response to Comments

Because of the large number of public comments we normally receive on **Federal Register** documents, we are not able to acknowledge or respond to them individually. We will consider all comments we receive by the date and time specified in the **DATES** section of this preamble, and, when we proceed with a subsequent document, we will respond to the comments in the preamble to that document.

V. Regulatory Impact Analysis

A. Statement of Need

Section 1331 of the Patient Protection and Affordable Care Act (42 U.S.C. 18051) requires the Secretary to establish a BHP, and section 1331(d)(1) specifically provides that if the Secretary finds that a state meets the requirements of the program established under section 1331(a) of the Patient Protection and Affordable Care Act, the Secretary shall transfer to the state Federal BHP payments described in section 1331(d)(3). This proposed methodology provides for the funding methodology to determine the Federal BHP payment amounts required to implement these provisions for program year 2022.

B. Overall Impact

We have examined the impacts of this methodology as required by Executive Order 12866 on Regulatory Planning and Review (September 30, 1993), Executive Order 13563 on Improving Regulation and Regulatory Review (January 18, 2011), the Regulatory Flexibility Act (RFA) (September 19, 1980, Pub. L. 96–354), section 1102(b) of the Act, section 202 of the Unfunded Mandates Reform Act of 1995 (March 22, 1995; Pub. L. 104–4), Executive Order 13132 on Federalism (August 4, 1999), the Congressional Review Act (5 U.S.C. 804(2) and Executive Order 13771 on Reducing Regulation and Controlling Regulatory Costs (January 30, 2017).

Executive Orders 12866 and 13563 direct agencies to assess all costs and benefits of available regulatory alternatives and, if regulation is necessary, to select regulatory approaches that maximize net benefits (including potential economic, environmental, public health and safety effects, distributive impacts, and equity). Section 3(f) of Executive Order 12866 defines a ''significant regulatory action'' as an action that is likely to result in a rule: (1) (Having an annual effect on the economy of $100 million or more in any 1 year, or adversely and materially affecting a sector of the economy, productivity, competition, jobs, the environment, public health or safety, or state, local or tribal governments or communities (also referred to as ''economically significant''); (2) creating a serious inconsistency or otherwise interfering with an action taken or planned by another agency; (3) materially altering the budgetary impacts of entitlement grants, user fees, or loan programs or the rights and obligations of recipients thereof; or (4) raising novel legal or policy issues arising out of legal mandates, the President's priorities, or the principles set forth in the Executive Order.

A regulatory impact analysis (RIA) must be prepared for major rules with economically significant effects ($100 million or more in any 1 year). As noted in the BHP final rule, the BHP provides states the flexibility to establish an alternative coverage program for low-income individuals who would otherwise be eligible to purchase coverage on an Exchange. Because we make no changes in methodology that would have a consequential effect on state participation incentives, or on the size of either the BHP program or offsetting PTC and CSR expenditures, the effects of the changes made in this Payment Notice would not approach the $100 million threshold, and hence it is neither an economically significant rule under E.O. 12866 nor a major rule under the Congressional Review Act. Moreover, the proposed regulation is not economically significant within the meaning of section 3(f)(1) of the Executive Order.

C. Anticipated Effects

The provisions of this proposed methodology are designed to determine the amount of funds that will be transferred to states offering coverage through a BHP rather than to individuals eligible for Federal financial assistance for coverage purchased on the Exchange. We are uncertain what the total Federal BHP payment amounts to states will be as these amounts will vary from state to state due to the state-specific factors and conditions. For example, total Federal BHP payment amounts may be greater in more populous states simply by virtue of the fact that they have a larger BHP-eligible population and total payment amounts are based on actual enrollment. Alternatively, total Federal BHP payment amounts may be lower in states with a younger BHP-eligible population as the RP used to calculate the Federal BHP payment will be lower relative to older BHP enrollees. While state composition will cause total Federal BHP payment amounts to vary from state to state, we believe that the methodology, like the methodology used in 2021, accounts for these variations to ensure accurate BHP payment transfers are made to each state.

The Regulatory Flexibility Act (5 U.S.C. 601 *et seq.*) (RFA) requires agencies to prepare a final regulatory flexibility analysis to describe the impact of the final rule on small entities, unless the head of the agency can certify that the rule will not have a significant economic impact on a substantial number of small entities. The RFA generally defines a ''small entity'' as (1) a proprietary firm meeting the size standards of the Small Business Administration (SBA); (2) a not-for-profit organization that is not dominant in its field; or (3) a small government jurisdiction with a population of less than 50,000. Individuals and states are not included in the definition of a small entity. Few of the entities that meet the definition of a small entity as that term is used in the RFA would be impacted directly by this methodology.

Because this methodology is focused solely on Federal BHP payment rates to states, it does not contain provisions that would have a direct impact on hospitals, physicians, and other health care providers that are designated as small entities under the RFA. Accordingly, we have determined that the methodology, like the previous methodology and the final rule that established the BHP program, will not have a significant economic impact on a substantial number of small entities.

Section 1102(b) of the Act requires us to prepare a regulatory impact analysis if a methodology may have a significant economic impact on the operations of a substantial number of small rural hospitals. For purposes of section 1102(b) of the Act, we define a small rural hospital as a hospital that is located outside of a metropolitan statistical area and has fewer than 100 beds. For the preceding reasons, we have determined that the methodology will not have a significant impact on a substantial number of small rural hospitals.

Section 202 of the Unfunded Mandates Reform Act (UMRA) of 2005 requires that agencies assess anticipated costs and benefits before issuing any rule whose mandates require spending in any 1 year of $100 million in 1995 dollars, updated annually for inflation, by state, local, or tribal governments, in the aggregate, or by the private sector. In 2020, that threshold is approximately $156 million. States have the option, but are not required, to establish a BHP. Further, the methodology would establish Federal payment rates without requiring states to provide the Secretary with any data not already required by other provisions of the Patient Protection and Affordable Care Act or its implementing regulations. Thus, neither the current nor the proposed payment methodologies mandate expenditures by state governments, local governments, or tribal governments.

Executive Order 13132 establishes certain requirements that an agency must meet when it issues a final rule that imposes substantial direct effects on states, preempts state law, or otherwise has federalism implications. The BHP is entirely optional for states, and if implemented in a state, provides access to a pool of funding that would not otherwise be available to the state. Accordingly, the requirements of Executive Order 13132 do not apply to this proposed methodology.

D. Alternative Approaches

We considered several alternatives in developing the proposed BHP payment methodology for 2022, and we discuss some of these alternatives below.

We considered alternatives as to how to calculate the PAF in the proposed methodology for 2022. The proposed value for the PAF is 1.188, which is the same as was used for 2018, 2019, 2020, and 2021. We believe it would be difficult to obtain the updated information from QHP issuers comparable to what was used to develop the 2018 factor, because QHP issuers may not distinctly consider the impact of the discontinuance of CSR payments on the QHP premiums any longer. We do not have reason to believe that the value of the PAF would change significantly between program years 2018 and 2022. We are continuing to consider whether or not there are other methodologies or data sources we may be able to use to calculate the PAF.

We also considered alternatives as how to calculate the MTSF in the proposed methodology for 2022. The proposed value for the MTSF for program year 2022 is 96.68 percent. We considered whether other sources of data that include data after 2019 should be used to calculate the MTSF for 2022, including calculating the MTSF with partial 2020 data collected by CMS for Exchange plan selection and enrollment (by income and by metal tier selection) and for APTC paid for 2021 (based on the number of months available at the time the final payment methodology is published).

We also considered whether to continue to provide states the option to develop a protocol for a retrospective adjustment to the population health factor (PHF) as we did in previous payment methodologies. We believe that continuing to provide this option is appropriate and likely to improve the accuracy of the final payments.

We also considered whether to require the use of the program year premiums to develop the Federal BHP payment rates, rather than allow the choice between the program year premiums and the prior year premiums trended forward. We believe that the payment rates can still be developed accurately using either the prior year QHP premiums or the current program year premiums and that it is appropriate to continue to provide the states these options.

Many of the factors proposed in this proposed methodology are specified in statute; therefore, for these factors we are limited in the alternative approaches we could consider. One area in which we previously had and still have a choice is in selecting the data sources used to determine the factors included in the proposed methodology. Except for state-specific RPs and enrollment data, we propose using national rather than state-specific data. This is due to the lack of currently available state-specific data needed to develop the majority of the factors included in the proposed methodology. We believe the national data will produce sufficiently accurate determinations of payment rates. In addition, we believe that this approach will be less burdensome on states. In many cases, using state-specific data would necessitate additional requirements on the states to collect, validate, and report data to CMS. By using national data, we are able to collect data from other sources and limit the burden placed on the states. For RPs and enrollment data, we propose using state-specific data rather than national data as we believe state-specific data will produce more accurate determinations than national averages.

We request public comment on these alternative approaches.

E. Regulatory Reform Analysis Under E.O. 13771

Executive Order 13771, titled Reducing Regulation and Controlling Regulatory Costs, was issued on January 30, 2017 and requires that the costs associated with significant new regulations ''shall, to the extent permitted by law, be offset by the elimination of existing costs associated with at least two prior regulations.'' This proposed methodology, if finalized as proposed, is expected to be neither an E.O. 13771 regulatory action nor an E.O. 13771 deregulatory action.

F. Conclusion

We believe that this proposed BHP payment methodology is effectively the same methodology as finalized for 2021. BHP payment rates may change as the values of the factors change, most notably the QHP premiums for 2021 or 2022. We do not anticipate this proposed methodology to have any significant effect on BHP enrollment in 2022.

In accordance with the provisions of Executive Order 12866, this regulation was reviewed by the Office of Management and Budget.

Dated: October 8, 2020.

Seema Verma,

Administrator, Centers for Medicare & Medicaid Services.

Dated: October 15, 2020.

Alex M. Azar II,

Secretary, Department of Health and Human Services.

[FR Doc. 2020–24147 Filed 10–30–20; 11:15 am]

BILLING CODE 4120–01–P

DEPARTMENT OF THE INTERIOR

Fish and Wildlife Service

50 CFR Part 17

[Docket No. FWS–R4–ES–2020–0078; FF09E21000 FXES11110900000 201]

RIN 1018–BE82

Endangered and Threatened Wildlife and Plants; Endangered Species Status for the Canoe Creek Clubshell and Designation of Critical Habitat

AGENCY: Fish and Wildlife Service, Interior.

ACTION: Proposed rule.

SUMMARY: We, the U.S. Fish and Wildlife Service (Service), announce a 12-month finding on a petition to list the Canoe Creek clubshell (*Pleurobema athearni*), a freshwater mussel species endemic to a single watershed in north-central Alabama, as an endangered or threatened species and to designate critical habitat under the Endangered Species Act of 1973, as amended (Act). After a review of the best available scientific and commercial information, we find that listing the species is warranted. Accordingly, we propose to list the Canoe Creek clubshell as an endangered species under the Act. We also propose to designate critical habitat for the Canoe Creek clubshell under the Act. In total, approximately 58.5 river kilometers (36.3 river miles) in St. Clair and Etowah Counties, Alabama, fall within the boundaries of the proposed critical habitat designation. Finally, we announce the availability of a draft economic analysis (DEA) of the proposed designation of critical habitat for the Canoe Creek clubshell.

DATES: We will accept comments received or postmarked on or before January 4, 2021. Comments submitted electronically using the Federal eRulemaking Portal (see **ADDRESSES**, below) must be received by 11:59 p.m. Eastern Time on the closing date. We must receive requests for a public hearing, in writing, at the address shown in **FOR FURTHER INFORMATION CONTACT** by December 18, 2020.

ADDRESSES: You may submit comments by one of the following methods:

(1) *Electronically:* Go to the Federal eRulemaking Portal: *http://www.regulations.gov.* In the Search box, enter FWS–R4–ES–2020–0078, which is the docket number for this rulemaking. Then, click on the Search button. On the resulting page, in the Search panel on the left side of the screen, under the Document Type heading, check the Proposed Rule box to locate this document. You may submit a comment by clicking on ''Comment Now!''

(2) *By hard copy:* Submit by U.S. mail to: Public Comments Processing, Attn: FWS–R4–ES–2020–0078, U.S. Fish and Wildlife Service, MS: PRB/3W, 5275 Leesburg Pike, Falls Church, VA 22041–3803.

We request that you send comments only by the methods described above. We will post all comments on *http://www.regulations.gov.* This generally means that we will post any personal information you provide us (see Information Requested, below, for more information).

Availability of supporting materials: For the critical habitat designation, the coordinates or plot points or both from which the maps are generated are included in the administrative record and are available at *https://www.fws.gov/daphne* and at *http://www.regulations.gov* under Docket No. FWS–R4–ES–2020–0078. Any additional tools or supporting information that we may develop for the critical habitat designation will also be available at the Service website set out above, and may also be included in the preamble and/or at *http://www.regulations.gov.*

FOR FURTHER INFORMATION CONTACT: William J. Pearson, Field Supervisor, U.S. Fish and Wildlife Service, Alabama Ecological Services Field Office, 1208 Main Street, Daphne, AL 36526; telephone 251–441–5181. Persons who use a telecommunications device for the deaf (TDD) may call the Federal Relay Service at 800–877–8339.

SUPPLEMENTARY INFORMATION:

Executive Summary

Why we need to publish a rule. Under the Act, if we determine that a species is warranted for listing as an endangered or threatened species throughout all or a significant portion of its range, we are required to promptly publish a proposal in the **Federal Register** and make a determination on our proposal within one year. To the maximum extent prudent and determinable, we must designate critical habitat for any species that we determine to be an endangered or threatened species under the Act. Listing a species as an endangered or threatened species and designation of critical habitat can only be completed by issuing a rule.

What this document does. We propose to list the Canoe Creek clubshell as an endangered species under the Act, and we propose the designation of critical habitat for the species.

The basis for our action. Under the Act, we may determine that a species is an endangered or threatened species because of any of five factors: (A) The present or threatened destruction, modification, or curtailment of its habitat or range; (B) overutilization for commercial, recreational, scientific, or educational purposes; (C) disease or predation; (D) the inadequacy of existing regulatory mechanisms; or (E) other natural or manmade factors affecting its continued existence. We have determined that habitat degradation through changes in water quality and quantity (Factor A), increased sedimentation (Factor A), and climate events (Factor E) are the primary threats to the species.

Section 4(a)(3) of the Act requires the Secretary of the Interior (Secretary) to designate critical habitat concurrent with listing to the maximum extent prudent and determinable. Section 3(5)(A) of the Act defines critical habitat as (i) the specific areas within the geographical area occupied by the species, at the time it is listed, on which are found those physical or biological features (I) essential to the conservation of the species and (II) which may require special management considerations or protections; and (ii) specific areas outside the geographical area occupied by the species at the time it is listed, upon a determination by the Secretary that such areas are essential for the conservation of the species. Section 4(b)(2) of the Act states that the Secretary must make the designation on the basis of the best scientific data available and after taking into consideration the economic impact, the impact on national security, and any other relevant impacts of specifying any particular area as critical habitat.

Peer review. In accordance with our joint policy on peer review published in the **Federal Register** on July 1, 1994 (59 FR 34270), and our August 22, 2016, memorandum updating and clarifying the role of peer review of listing actions under the Act, we sought the expert opinions of eight appropriate specialists with expertise in biology, habitat, and threats to the species regarding the species status assessment report. We did not receive any responses to our peer review requests. The purpose of peer review is to ensure that our listing determinations, critical habitat designations, and 4(d) rules are based on scientifically sound data, assumptions, and analyses.

Because we will consider all comments and information we receive during the comment period, our final determinations may differ from this proposal. Based on the new information

we receive (and any comments on that new information), we may conclude that the species is threatened instead of endangered, or we may conclude that the species does not warrant listing as either an endangered species or a threatened species and withdraw this proposed rule. Such final decisions would be a logical outgrowth of this proposal, as long as we: (1) Base the decisions on the best scientific and commercial data available after considering all of the relevant factors; (2) do not rely on factors Congress has not intended us to consider; and (3) articulate a rational connection between the facts found and the conclusions made, including why we changed our conclusion.

Information Requested

We intend that any final action resulting from this proposed rule will be based on the best scientific and commercial data available and be as accurate and as effective as possible. Therefore, we request comments or information from other concerned governmental agencies, Native American tribes, the scientific community, industry, or any other interested parties concerning this proposed rule.

We particularly seek comments concerning:

(1) The species' biology, range, and population trends, including:

(a) Biological or ecological requirements of the species, including habitat requirements for feeding, breeding, and sheltering;

(b) Genetics and taxonomy;

(c) Historical and current range, including distribution patterns;

(d) Historical and current population levels, and current and projected trends; and

(e) Past and ongoing conservation measures for the species, its habitat, or both.

(2) Factors that may affect the continued existence of the species, which may include habitat modification or destruction, overutilization, disease, predation, the inadequacy of existing regulatory mechanisms, or other natural or manmade factors.

(3) Biological, commercial trade, or other relevant data concerning any threats (or lack thereof) to this species and existing regulations that may be addressing those threats.

(4) Additional information concerning the historical and current status, range, distribution, and population size of this species, including the locations of any additional populations of this species.

(5) The reasons why we should or should not designate habitat as ''critical habitat'' under section 4 of the Act (16 U.S.C. 1531 *et seq.*), including information to inform the following factors that the regulations identify as reasons why designation of critical habitat may be not prudent:

(a) The species is threatened by taking or other human activity and identification of critical habitat can be expected to increase the degree of such threat to the species;

(b) The present or threatened destruction, modification, or curtailment of a species' habitat or range is not a threat to the species, or threats to the species' habitat stem solely from causes that cannot be addressed through management actions resulting from consultations under section 7(a)(2) of the Act;

(c) Areas within the jurisdiction of the United States provide no more than negligible conservation value, if any, for a species occurring primarily outside the jurisdiction of the United States; or

(d) No areas meet the definition of critical habitat.

(6) Specific information on:

(a) The amount and distribution of Canoe Creek clubshell habitat;

(b) What areas, that were occupied at the time of listing and that contain the physical or biological features essential to the conservation of the species, should be included in the designation and why;

(c) Special management considerations or protection that may be needed in critical habitat areas we are proposing, including managing for the potential effects of climate change; and

(d) What areas not occupied at the time of listing are essential for the conservation of the species. We particularly seek comments:

(i) Regarding whether occupied areas are adequate for the conservation of the species; and

(ii) Providing specific information regarding whether or not unoccupied areas would, with reasonable certainty, contribute to the conservation of the species and contain at least one physical or biological feature essential to the conservation of the species.

(7) Land use designations and current or planned activities in the subject areas and their possible impacts on proposed critical habitat.

(8) Any probable economic, national security, or other relevant impacts of designating any area that may be included in the final designation, and the related benefits of including or excluding specific areas.

(9) Information on the extent to which the description of probable economic impacts in the draft economic analysis is a reasonable estimate of the likely economic impacts.

(10) Whether any specific areas we are proposing for critical habitat designation should be considered for exclusion under section 4(b)(2) of the Act, and whether the benefits of potentially excluding any specific area outweigh the benefits of including that area under section 4(b)(2) of the Act.

(11) Whether we could improve or modify our approach to designating critical habitat in any way to provide for greater public participation and understanding, or to better accommodate public concerns and comments.

Please include sufficient information with your submission (such as scientific journal articles or other publications) to allow us to verify any scientific or commercial information you include.

Please note that submissions merely stating support for, or opposition to, the action under consideration without providing supporting information, although noted, will not be considered in making a determination, as section 4(b)(1)(A) of the Act directs that determinations as to whether any species is an endangered or a threatened species must be made ''solely on the basis of the best scientific and commercial data available.''

You may submit your comments and materials concerning this proposed rule by one of the methods listed in **ADDRESSES**. We request that you send comments only by the methods described in **ADDRESSES**.

If you submit information via *http://www.regulations.gov,* your entire submission—including any personal identifying information—will be posted on the website. If your submission is made via a hardcopy that includes personal identifying information, you may request at the top of your document that we withhold this information from public review. However, we cannot guarantee that we will be able to do so. We will post all hardcopy submissions on *http://www.regulations.gov.*

Comments and materials we receive, as well as supporting documentation we used in preparing this proposed rule, will be available for public inspection on *http://www.regulations.gov.*

Public Hearing

Section 4(b)(5) of the Act provides for a public hearing on this proposal, if requested. Requests must be received by the date specified in **DATES**. Such requests must be sent to the address shown in **FOR FURTHER INFORMATION CONTACT**. We will schedule a public hearing on this proposal, if requested, and announce the date, time, and place

of the hearing, as well as how to obtain reasonable accommodations, in the **Federal Register** and local newspapers at least 15 days before the hearing. For the immediate future, we will provide these public hearings using webinars that will be announced on the Service's website, in addition to the **Federal Register**. The use of these virtual public hearings is consistent with our regulation at 50 CFR 424.16(c)(3).

Previous Federal Actions

On April 20, 2010, the Service was petitioned by the Center for Biological Diversity, Alabama Rivers Alliance, Clinch Coalition, Dogwood Alliance, Gulf Restoration Network, Tennessee Forests Council, West Virginia Highlands Conservancy, Tierra Curry, and Noah Greenwald to list 404 aquatic, riparian, and wetland species, including the Canoe Creek clubshell (named as the ''Canoe Creek pigtoe'' in the petition) as endangered or threatened species under the Act. On September 27, 2011, we published a 90-day finding in the **Federal Register** (76 FR 59836), concluding that the petition presented substantial information indicating that listing the Canoe Creek clubshell may be warranted. On March 16, 2016, the Center for Biological Diversity filed a complaint against the Service for failure to complete a 12-month finding for the Canoe Creek clubshell. On August 30, 2016, the Service entered into a settlement agreement with the Center for Biological Diversity whereby the Service agreed to submit a 12-month finding for the Canoe Creek clubshell to the **Federal Register** by September 30, 2020. This document serves as our 12-month finding on the April 20, 2010, petition.

Supporting Documents

A species status assessment (SSA) team prepared an SSA report for the Canoe Creek clubshell. The SSA team was composed of Service biologists, in consultation with other species experts. The SSA report represents a compilation of the best scientific and commercial data available concerning the status of the species, including the impacts of past, present, and future factors (both negative and beneficial) affecting the species. The Service sent the SSA report to eight independent peer reviewers. Although we made several attempts to obtain responses from the peer reviewers, we did not receive a review from any of them. The Service also sent the SSA report to four partners, including scientists with expertise in the ecology and life history of the Canoe Creek clubshell and related freshwater mussels, as well as in the mussel habitat of the Big Canoe Creek watershed in which the species lives, for review. We received reviews from two partners: The State of Alabama and the Service's Conservation Genetics Laboratory.

I. Proposed Listing Determination

Background

A thorough review of the taxonomy, life history, and ecology of the Canoe Creek clubshell (*Pleurobema athearni*) is presented in the SSA report (version 1.1, Service 2020, pp. 14–27).

The Canoe Creek clubshell is a medium-sized mussel that grows up to 93 millimeters (mm) in length. The shell outline is roughly ovate or sub-ovate with slight sculpturing on the posterior-dorsal third of the valves (Gangloff *et al.* 2006, p. 48). The outside of the shell is tawny to brown in color and without rays (Williams *et al.* 2008, p. 505).

The Canoe Creek clubshell occurs only in the Big Canoe Creek watershed in St. Clair and Etowah Counties, Alabama (Gangloff *et al.* 2006, p. 53; Williams *et al.* 2008, p. 506). Information on the historical distribution of the species is limited and gleaned primarily from vouchered museum specimens (Gangloff *et al.* 2006, p. 47; MRBMRC 2010, p. 26). A genetic analysis of *Pleurobema* and *Fusconaia* species in the Coosa River led to the description of this species in 2006 (Gangloff *et al.* 2006, entire). Thus, it is difficult to quantify the historical population. The animal was likely collected in historical samplings but reported as a different species that is similar in appearance (*e.g.,* southern pigtoe (*Pleurobema georgianum*), ovate clubshell (*Pleurobema perovatum*), Georgia pigtoe (*Pleurobema hanleyianum*), or Gulf pigtoe (*Fusconaia cerina*)). Recent comprehensive surveys of the species in 2017 and 2018 verified that it is present at historical locations; therefore, we conclude that the current distribution of the species is likely similar to its historical distribution (Gangloff *et al.* 2006, p. 47; Fobian *et al.* 2017, pp. 26–29). However, the population within that distribution may be patchily distributed, in very low abundance, and absent of recent recruitment (Fobian *et al.* 2017, pp. 10–11, 38).

The species' distribution is disjunct; the Little Canoe Creek West and Big Canoe Creek mainstem portions are separated from the Little Canoe Creek East portion by 28 kilometers (km) (17 miles (mi)) of unoccupied stream. In this unoccupied area sits the backwaters of the H. Neely Henry Reservoir, an inundated portion of the river constructed in 1966 that is unsuitable habitat for the Canoe Creek clubshell. The distance between the two portions of the clubshell's range likely exceeds the dispersal distance of the species' host fish (the clubshell's primary mode of dispersal). In addition, the unsuitable stretch of river caused by the reservoir presents a significant barrier to dispersal. As a result, we conclude no genetic exchange occurs between the western and eastern parts of the species' range and these two areas have likely been physically separated since the construction of the reservoir in the late 1960s. Although genetic research supports the Canoe Creek clubshell as a valid species, we do not have any genetic information regarding the two areas of the species' range (Gangloff *et al.* 2006, entire). Due to the physical barrier between these areas and the inability of a host fish to travel between them, we characterize these areas as subpopulations (referred to throughout this document as the western and eastern subpopulations).

The Canoe Creek clubshell, like other freshwater mussels, has a complex life history involving an obligate parasitic larval life stage that is wholly dependent on a suitable host fish (Haag 2012, pp. 38–41). For reproduction, males release sperm into the water column, females take up the sperm, and the sperm fertilizes eggs held in the female. The developing larvae remain in the female's gill chamber until they mature and are ready to be released. These mature larvae are called glochidia.

The Canoe Creek clubshell targets host fish to infest with their glochidia by releasing the glochidia in packets called conglutinates that resemble fish prey items (Haag 2012, pp. 148, 163; Williams *et al.* 2008, p. 506). Host fish used by the Canoe Creek clubshell include the tricolor shiner (*Cyprinella trichroistia*), Alabama shiner (*C. callistia*), and striped shiner (*Luxilus chrysocephalus*), among others (Fobian 2019, pp. 6, 14). Since adult mussels are sedentary, dispersal of individuals is accomplished during the glochidial life stage when they are attached to their mobile host fish (Smith 1985, p. 105). The clubshell's host fish species are common and widely distributed within the Big Canoe Creek watershed; therefore, host availability is not likely limiting the reproductive success of the mussel. However, these fish move relatively short distances, which means that dispersal of the clubshell is also limited.

Once attached to a fish host, the larvae draw nutrients from the fish and develop into juvenile mussels (Arey

1932, pp. 213–214; Haag 2012, p. 42). After about 2 to 4 weeks, when the metamorphosis is complete, juveniles fall to the stream bottom where they live the remainder of their lives as free-living benthic animals (Haag 2012, p. 42; Fobian 2019, pp. 6, 17).

Canoe Creek clubshells, like other freshwater mussels, are naturally inefficient reproducers because recruitment success is very low. While survival of adult mussels is generally high (annual adult survival is greater than 90 percent) (Haag 2012, pp. 219–221), the survival from the glochidial stage to the benthic recruitment stage is exceptionally low (0.00001 percent to 0.000001 percent) (Haag 2012, p. 220). This means that individual females may successfully produce only 0.1 to 1.3 juveniles per year (Haag 2012, p. 220), despite an annual fecundity of many thousands to millions of glochidia (Haag and Staton 2003, pp. 2122–2123; Haag 2013, pp. 748–751; Fobian 2019, p. 12). Further, survival of recruits immediately after settlement is also extremely low; in a hatchery, about 50 percent survive during the first 50 days (Hanlon and Neves 2006, pp. 47–48), and the rate in the wild is likely lower. After settlement, survival increases significantly. Individuals reach sexual maturity around 4 to 6 years of age (Fobian 2019, pers. comm.) and have a life expectancy of about 25 to 35 years (Haag and Rypel 2010, p. 6).

Mussels are omnivores, and their diet consists of a wide variety of particulate material (primarily less than 20 micrometers in size), including algae, bacteria, detritus, and microscopic animals (Gatenby *et al.* 1996, p. 606; Haag 2012, pp. 26–27). Dissolved organic matter may also be a significant source of nutrition (Vaughn *et al.* 2008, p. 411). Adult freshwater mussels are primarily suspension-feeders that filter water and nutrients to eat. Filter feeding also allows mussels to uptake oxygen, excrete waste, and disperse and acquire gametes (Haag 2012, p. 27).

Regulatory and Analytical Framework

Regulatory Framework

Section 4 of the Act (16 U.S.C. 1533) and its implementing regulations (50 CFR part 424) set forth the procedures for determining whether a species is an ''endangered species'' or a ''threatened species.'' The Act defines an endangered species as a species that is ''in danger of extinction throughout all or a significant portion of its range,'' and a threatened species as a species that is ''likely to become an endangered species within the foreseeable future throughout all or a significant portion of its range.'' The Act requires that we determine whether any species is an ''endangered species'' or a ''threatened species'' because of any of the following factors:

(A) The present or threatened destruction, modification, or curtailment of its habitat or range;

(B) Overutilization for commercial, recreational, scientific, or educational purposes;

(C) Disease or predation;

(D) The inadequacy of existing regulatory mechanisms; or

(E) Other natural or manmade factors affecting its continued existence.

These factors represent broad categories of natural or human-caused actions or conditions that could have an effect on a species' continued existence. In evaluating these actions and conditions, we look for those that may have a negative effect on individuals of the species, as well as other actions or conditions that may ameliorate any negative effects or may have positive effects.

We use the term ''threat'' to refer, in general, to actions or conditions that are known to or are reasonably likely to negatively affect individuals of a species. The term ''threat'' includes actions or conditions that have a direct impact on individuals (direct impacts), as well as those that affect individuals through alteration of their habitat or required resources (stressors). The term ''threat'' may encompass—either together or separately—the source of the action or condition or the action or condition itself.

However, the mere identification of any threat(s) does not necessarily mean that the species meets the statutory definition of an ''endangered species'' or a ''threatened species.'' In determining whether a species meets either definition, we must evaluate all identified threats by considering the expected response by the species, and the effects of the threats—in light of those actions and conditions that will ameliorate the threats—on an individual, population, and species level. We evaluate each threat and its expected effects on the species, then analyze the cumulative effect of all of the threats on the species as a whole. We also consider the cumulative effect of the threats in light of those actions and conditions that will have positive effects on the species, such as any existing regulatory mechanisms or conservation efforts. The Secretary determines whether the species meets the definition of an ''endangered species'' or a ''threatened species'' only after conducting this cumulative analysis and describing the expected effect on the species now and in the foreseeable future.

The Act does not define the term ''foreseeable future,'' which appears in the statutory definition of ''threatened species.'' Our implementing regulations at 50 CFR 424.11(d) set forth a framework for evaluating the foreseeable future on a case-by-case basis. The term ''foreseeable future'' extends only so far into the future as the Services can reasonably determine that both the future threats and the species' responses to those threats are likely. In other words, the foreseeable future is the period of time in which we can make reliable predictions. ''Reliable'' does not mean ''certain''; it means sufficient to provide a reasonable degree of confidence in the prediction. Thus, a prediction is reliable if it is reasonable to depend on it when making decisions.

It is not always possible or necessary to define foreseeable future as a particular number of years. Analysis of the foreseeable future uses the best scientific and commercial data available and should consider the timeframes applicable to the relevant threats and to the species' likely responses to those threats in view of its life-history characteristics. Data that are typically relevant to assessing the species' biological response include species-specific factors such as lifespan, reproductive rates or productivity, certain behaviors, and other demographic factors.

Analytical Framework

The SSA report documents the results of our comprehensive biological review of the best scientific and commercial data regarding the status of the species, including an assessment of the potential threats to the species. The SSA report does not represent a decision by the Service on whether the species should be proposed for listing as an endangered or threatened species under the Act. It does, however, provide the scientific basis that informs our regulatory decisions, which involve the further application of standards within the Act and its implementing regulations and policies. The following is a summary of the key results and conclusions from the SSA report; the full SSA report can be found at Docket No. FWS–R4–ES–2020–0078 on *http://www.regulations.gov.*

To assess the Canoe Creek clubshell's viability, we used the three conservation biology principles of resiliency, redundancy, and representation (Shaffer and Stein 2000, pp. 306–310). Briefly, resiliency supports the ability of the species to withstand environmental and demographic stochasticity (*e.g.,* wet or dry, warm or cold years), redundancy

supports the ability of the species to withstand catastrophic events (*e.g.,* droughts, large pollution events), and representation supports the ability of the species to adapt over time to long-term changes in the environment (*e.g.,* climate changes). In general, the more resilient and redundant a species is and the more representation it has, the more likely it is to sustain populations over time, even under changing environmental conditions. Using these principles, we identified the species' ecological requirements for survival and reproduction at the individual, population, and species levels, and described the beneficial and risk factors influencing the species' viability.

The SSA process can be categorized into three sequential stages. During the first stage, we evaluated the individual species' life-history needs. The next stage involved an assessment of the historical and current condition of the species' demographics and habitat characteristics, including an explanation of how the species arrived at its current condition. The final stage of the SSA involved making predictions about the species' responses to positive and negative environmental and anthropogenic influences. Throughout all of these stages, we used the best available information to characterize viability as the ability of a species to sustain populations in the wild over time. We use this information to inform our regulatory decision.

Summary of Biological Status and Threats

In this discussion, we review the biological condition of the species and its resources, and the threats that influence the species' current and future condition, in order to assess the species' overall viability and the risks to that viability.

We note that, by using the SSA framework to guide our analysis of the scientific information documented in the SSA report, we have not only analyzed individual effects on the species, but we have also analyzed their potential cumulative effects. We incorporate the cumulative effects into our SSA analysis when we characterize the condition of the species. Our assessment of the condition encompasses and incorporates the threats individually and cumulatively. Our condition assessment is iterative because it accumulates and evaluates the effects of all the factors that may be influencing the species, including threats and conservation efforts. Because the SSA framework considers not just the presence of the factors, but to what degree they collectively influence risk to the entire species, our assessment integrates the cumulative effects of the factors and replaces a standalone cumulative effects analysis.

Individual, Subpopulation, and Species Needs

The primary requirements for individual Canoe Creek clubshells include the following: Stable instream substrate for settling and burrowing; clean, flowing water to keep substrates free from excess sedimentation and to facilitate host fish interactions and feeding; appropriate water quality and temperatures to meet physiological needs for survival, growth, and reproduction; food and nutrients to survive and grow; and host fish for reproduction and dispersal.

Juvenile and adult Canoe Creek clubshells need stable instream substrates, including, but not limited to, coarse sand and gravel for settlement and sheltering. Clean, flowing water is needed to keep these substrates free from excess sedimentation that may reduce the amount of available habitat for sheltering, hinder a mussel's ability to feed, and, in severe instances, cause smothering and death (see *Risk Factors for the Canoe Creek Clubshell,* below, for information on impacts of sedimentation). Clean, flowing water is also needed to attract host fish and disperse juveniles throughout stream reaches. In addition, freshwater mussels are sensitive to changes in water quality parameters such as temperature, dissolved oxygen, ammonia, and pollutants. Therefore, while the precise tolerance thresholds for these water quality parameters are unknown for the Canoe Creek clubshell, we know the species requires water of sufficient quality to sustain its natural physiological processes for normal behavior, growth, and survival at all life stages (see *Risk Factors for the Canoe Creek Clubshell,* below, for more information on water quality impairments). Food and nutrients are needed for individuals at all life stages for survival and growth (see Background, above, for information on food sources and feeding). Lastly, the presence of host fish is needed for successful reproduction and dispersal. Host fish used by the Canoe Creek clubshell include the tricolor shiner (*Cyprinella trichroistia*), Alabama shiner (*C. callistia*), and striped shiner (*Luxilus chrysocephalus*), among others (see Background, above, for more information on reproduction and host fish).

To be healthy at the subpopulation and species levels, the Canoe Creek clubshell needs individuals to be present in sufficient numbers throughout the subpopulations; reproduction, which is evidenced by the presence of multiple age classes within a subpopulation; and connectivity among mussel beds (local aggregations) within a subpopulation and between subpopulations. Mussel abundance facilitates reproduction. Mussels do not actively seek mates; males release sperm into the water column, where it drifts until a female takes it in (Moles and Layzer 2008, p. 212). Therefore, successful reproduction and subpopulation growth requires a sufficient number of females to be downstream of a sufficient number of males.

There must also be multiple mussel beds of sufficient density such that local stochastic events do not eliminate most or all the beds. Connectivity among beds within each subpopulation is also needed to allow mussel beds within a stream reach to be recolonized by one another and recover from stochastic events. A nonlinear distribution of beds over a sufficiently large area also helps buffer against stochastic events that may impact portions of a clubshell subpopulation. Similarly, having multiple subpopulations that are connected to one another protects the species from catastrophic events, such as spills, because subpopulations can recolonize one another following events that impact the entirety or portions of one subpopulation.

Risk Factors for the Canoe Creek Clubshell

We identified several factors that are influencing the viability of the Canoe Creek clubshell. The primary factors include sedimentation, water quality, and climate events.

Sedimentation

Under a natural flow regime, sediments are washed through river and stream systems, and the overall amount of sediment in the substrate remains relatively stable over time. However, some past and ongoing activities or practices can result in elevated levels of sediment in the substrate. This excessive stream sedimentation (or siltation) can be caused by soil erosion associated with upland activities (*e.g.,* agriculture, forestry, unpaved roads, road construction, development, unstable streambanks, and urbanization) and stream channel destabilization associated with other activities (*e.g.,* dredging, poorly installed culverts, pipeline crossings, or other instream structures) (Brim Box and Mossa 1999, p. 102; Wynn *et al.* 2016, pp. 36–52). In severe cases, stream bottoms can

become ''embedded,'' whereby substrate features including larger cobbles, gravel, and boulders are surrounded by, or buried in, sediment, which eliminates interstitial spaces (small openings between rocks and gravels).

The negative effects of increased sedimentation on mussels are relatively well-understood (Brim Box and Mossa 1999, entire; Gascho Landis *et al.* 2013, entire; Poole and Downing 2004, pp. 118–124). First, the river processes and sediment dynamics caused by increased sedimentation degrade and reduce the amount of habitats available to mussels. Juvenile mussels burrow into interstitial spaces in the substrate. Therefore, juveniles are particularly susceptible to excess sedimentation that removes those spaces, and they are unable to find adequate habitat to survive and become adults (Brim Box and Mossa 1999, p. 100). Second, sedimentation interferes with juvenile and adult physiological processes and behaviors. Mussels can die from being physically buried and smothered by excessive sediment. However, the primary impacts of excess sedimentation on individuals are sublethal; sedimentation can reduce a mussel's ability to feed (Brim Box and Mossa 1999, p. 101) and reproduce (by reducing the success of glochidial attachment and metamorphosis; Beussink 2007, pp. 19–20).

The primary activities causing sedimentation that have occurred, and continue to occur, in the Big Canoe Creek watershed include urbanization and development, agricultural practices, and forestry practices (Wynn *et al.* 2016, pp. 9–10, 50–51). Approximately 59 percent of the Big Canoe Creek watershed is in evergreen or mixed deciduous forest, and forestry activities are common in central Big Canoe Creek and Little Canoe Creek West. Agriculture is also common, with pasture and small farms comprising 18 percent, and cultivated crops comprising 2.3 percent, of land use in the watershed. Urban development comprises 6 percent of the watershed's land use and is concentrated near the cities of Ashville and Springville near the western clubshell subpopulation, and Steele near the eastern subpopulation (Wynn *et al.* 2016, p. 9).

A rapid habitat assessment survey that included an evaluation of sedimentation deposition was completed at multiple sites in the Big Canoe Creek watershed from 2008–2013 (Wynn *et al.* 2016, pp. 37–39). Overall habitat quality varied from poor to optimal throughout Big Canoe Creek's nine subwatersheds, but six subwatersheds were reported impaired by sedimentation (Wynn *et al.* 2016, p. 51).

Water Quality

Water quality in freshwater systems can be impaired through contamination or alteration of water chemistry. Chemical contaminants are ubiquitous throughout the environment and are a major reason for the current declining status of freshwater mussel species nationwide (Augspurger *et al.* 2007, p. 2025). Chemicals such as ammonia enter the environment through both point and nonpoint discharges, including spills, industrial sources, municipal effluents, and agricultural runoff. These sources contribute organic compounds, heavy metals, pesticides, herbicides, and a wide variety of newly emerging contaminants to the aquatic environment.

Alteration of water chemistry parameters is another type of impairment. Reduced dissolved oxygen levels and increased water temperatures are of particular concern. Runoff and wastewater can wash nutrients (*e.g.,* nitrogen and phosphorus) into the water column, which can stimulate excessive plant growth (Carpenter *et al.* 1998, p. 561). The decomposition of this plant material can lead to reduced dissolved oxygen levels and eutrophication. Increased temperatures from climate changes (Alder and Hostetler 2013, U.S. Geological Survey (USGS) National Climate Change Viewer) and low flow events during periods of drought can also reduce dissolved oxygen levels (Haag and Warren 2008, p. 1176).

The effects of water quality impairments on freshwater mussels is well studied (Naimo 1995, entire; Havlik and Marking 1987, entire; Milam *et al.* 2005, entire; Markick 2017, entire). Contaminants, reduced dissolved oxygen levels, and increased temperatures are primary types of impairments that affect mussel survival, reproduction, and fitness. Freshwater mussels in their early life stages are among the most sensitive organisms to contaminants, but all life stages are vulnerable and can suffer from both acute and chronic effects (Augspurger *et al.* 2003, p. 2569). Depending on the type and concentration, contaminants can cause mortality of or sublethal effects (*e.g.,* reduced filtration efficiency, growth, and reproduction) on mussels at all life stages.

In addition to contaminants, alterations in water chemistry, especially reduced dissolved oxygen levels and increased temperatures, can have negative impacts on mussels. Although juveniles tend to be more vulnerable, reduced dissolved oxygen levels can have lethal and sublethal impacts on mussels in all life stages. Mussels require oxygen for metabolism and when levels are low, normal functions and behaviors (*e.g.,* ventilation, filtration, oxygen consumption, feeding, growth, and reproduction) are impaired. Below a certain level, mortality can occur. Lastly, increased water temperatures can impact mussel health. Young juveniles (less than 3 weeks old) are particularly sensitive, with upper and lower thermal limits 2 to 3 degrees Celsius (°C) higher or lower than juveniles 1 to 2 years older (Martin 2016, pp. 14–17). While drastic increases in temperatures beyond thermal tolerances can cause mortality, the most common negative effects of temperatures on mussels is caused by relatively minor increases that exacerbate impacts caused by other issues, such as contamination. For example, temperature increases impair physiological functions like immune response, filtration and excretion rates, oxygen consumption, and growth (Pandolfo *et al.* 2012, p. 73). Temperature increases have been linked to increased respiration rates and have also been linked to increased toxicity of some metals, like copper (Rao and Khan 2000, pp. 176–177).

In the Big Canoe Creek watershed, water quality impairments have historically impacted the Canoe Creek clubshell and continue to do so. Historically, point source discharges and pesticide and herbicide applications were not well regulated. The Clean Water Act (CWA; 33 U.S.C. 1251 *et seq.*) is the primary Federal law in the United States governing water pollution. A primary role of the CWA is to regulate the point source discharge of pollutants to surface waters through a permit process pursuant to the National Pollutant Discharge Elimination System (NPDES). The NPDES permit process may be delegated by the Environmental Protection Agency (EPA) to the States. In Alabama, this authority has been delegated to the Alabama Department of Environmental Management (ADEM).

The Federal Insecticide, Fungicide, and Rodenticide Act (FIFRA; 7 U.S.C. 136 *et seq.*) is intended to protect against unreasonable human health or environmental effects. While pesticides are usually tested on standard biological media (*e.g.,* honey bees (*Apis sp.*), daphnia (*Daphnia magna*), bluegill sunfish (*Lepomis macrochirus*), rainbow trout (*Oncorhynchus mykiss*), mice (*Mus musculus*)), often endangered and threatened species are more susceptible to pollutants than test organisms commonly used in bioassays. While

State and Federal regulations have become more stringent and toxicity and environmental consequences of contaminants are better understood, the use of many pesticides and herbicides are more commonplace. Runoff and discharges are also concerns now and into the future with the ongoing urbanization of the area. Increasing water temperatures from drought events have been and will continue to exacerbate water quality issues (see ''Climate Events,'' below).

Climate Events

Climate events such as droughts and floods can have significant impacts on freshwater systems and their fundamental ecological processes (Poff *et al.* 2002, pp. ii–v). Drought can cause dewatering of freshwater habitats and low flows, which exacerbate water quality impairments (*e.g.,* dissolved oxygen, temperature, contaminants). Streams with smaller drainage areas are especially vulnerable to drought because they are more likely to experience extensive dewatering than larger streams that maintain substantial flow (Haag and Warren 2008, pp. 1172–1173). Floods can cause excessive erosion, destabilize banks and bed materials, and lead to increases in sedimentation and suspended solids. Climate change can affect the frequency and duration of drought and floods, as well as alter normal temperature regimes. Higher water temperatures, which are common during the low flow periods of droughts, decrease mussel survival (Gough *et al.* 2012, p. 2363).

Severe drought and major floods can have significant impacts on mussel communities (Haag and Warren 2008, p. 1165; Hastie *et al.* 2001, p. 107; Hastie *et al.* 2003, pp. 40–45). Reduced flows from drought can isolate or eliminate areas of suitable habitat for mussels in all life stages and render individuals exposed and vulnerable to drying and predation (Golladay *et al.* 2004, pp. 503–504). Drought can also degrade water quality (*e.g.,* decreased dissolved oxygen levels and increased temperatures), which can reduce mussel survival, reproduction, and fitness (Golladay *et al.* 2004, p. 501; Haag and Warren 2008, pp. 1174–1176) (see discussion above under ''Water Quality''). If severe or frequent, droughts can cause substantial declines in mussel abundance. Flooding can also affect mussels by dislodging individuals and depositing them in unsuitable habitat, which can affect their ability to survive and reproduce (Hastie *et al.* 2001, pp. 108, 114). Higher turbidity and reduced visibility during high flows reduce the chances of successful fertilization of the female and impede the host fish's ability to find and take up conglutinates.

While the Canoe Creek clubshell evolved in an environment that experiences periods of drought, the frequency of severe droughts in the Big Canoe Creek watershed has increased in recent decades (NOAA 2020). The stream segments within Big Canoe Creek where clubshells occur have relatively small drainage sizes, which render them particularly vulnerable to drought. Combined with other stressors such as water quality degradation that occur within the watershed, severe droughts can have significant impacts on the species (Haag and Warren 2008, p. 1175). No studies have been conducted specifically on the impacts of Canoe Creek clubshells within Big Canoe Creek following drought events. However, neighboring streams of similar size and condition experienced drastic declines in the density and abundance of the warrior pigtoe (*Pleurobema rubellum,* a mussel species similar to the clubshell). Following a severe drought event in 2000, warrior pigtoe abundance declined by 65 to 83 percent (Haag and Warren 2008, p. 1165), and multiple sites were extirpated. We presume that Big Canoe Creek faced similar conditions following this and other severe drought events because of its geographic proximity and similar size and condition. Additionally, we presume the Canoe Creek clubshell's response to the drought event was comparable to that of the warrior pigtoe given its similar life-history characteristics and physiological and habitat needs.

While the impacts on mussels following the drought in 2000 were well documented (Golladay et al. 2004, entire; Haag and Warren 2008, entire), drought events have been occurring in the area and affecting mussel communities for decades. The severity and frequency of droughts is closely monitored and recorded at the local and State levels by multiple initiatives (NDMC 2019; USGS 2019). The National Oceanic and Atmospheric Administration's (NOAA) National Integrated Drought Information System (NIDIS) program keeps one of the most extensive records (beginning in 1895) of drought in Alabama. The program uses the Palmer Drought Severity Index (PDSI), which is a measurement of dryness based on evapotranspiration (NOAA 2020). These data indicate that over the past 100 years (1918–2018), approximately 6 percent of years experienced severe drought.

While severe droughts are natural events that these streams have always experienced, this part of Alabama has undergone more frequent severe drought events over the last 20 years; the number of severe drought years has increased to approximately 11 percent (NOAA 2020, unpaginated). This drying trend was also recorded at the local scale. Water flow gauge data at a Big Canoe Creek gauging site reported low flows that correlate to the severe and exceptional droughts in the Big Canoe Creek watershed during 2000, 2007, and 2008 (USGS 2019). The severe drought events that occurred in relatively short succession during a prolonged dry period likely caused severe impacts to the survival, reproduction, and abundance of Canoe Creek clubshells. Although we do not have specific data on the Canoe Creek clubshell in response to these drought events, the decline of other freshwater mussel species was documented in a nearby watershed. The dark pigtoe (*Pleurobema furvum*), a freshwater mussel with similar life history characteristics of the Canoe Creek clubshell, was extirpated at sites with low densities following the 2000 severe drought event (Haag and Warran 2008, pp. 1173).

Species Condition

The Canoe Creek clubshell's ability to withstand, or be resilient to, stochastic events and disturbances such as drought and fluctuations in reproductive rates is extremely limited. The species has likely always been a rare, narrow endemic of the Big Canoe Creek watershed; however, past and ongoing stressors, including decreased water quality from drought events, development, and agriculture, among other sources, have greatly reduced the resiliency of the species. At present, the clubshell has extremely low abundance, shows no signs of successful reproduction, and has poor connectivity within and among subpopulations.

During comprehensive mussel surveys conducted in 2017 and 2018 in the Big Canoe Creek watershed, only 25 Canoe Creek clubshells were found (Fobian *et al.* 2017, entire; Fobian 2018, entire). In the western subpopulation, 9 individuals were found in 2 of the 40 sites that were surveyed. In the eastern subpopulation, 16 individuals were found at only 1 of the 8 sites that were surveyed. In the 25 years prior to these surveys, fewer than 15 live individuals were found (Fobian et al. 2017, pp. 9–10). However, despite the numbers of clubshell found in the 2017 surveys, the age structure of the individuals consisted of aged adults and the surveys found no evidence of successful recruitment (*i.e.,* sub adults (Fobian et al. 2017, pp. 9–10)).

In addition to a low abundance, the clubshell is experiencing recruitment failure; juveniles are not surviving to reproductive ages and joining the adult population (Strayer and Malcom 2012, pp. 1783–1785). This is evidenced by the species' heavily skewed age class distribution. Of the 25 individuals found in recent surveys, all were aging adults (Fobian *et al.* 2017, entire; Fobian 2018, entire). This skewed age class distribution is indicative of a species that is not successfully reproducing and is in decline.

Lastly, the resiliency of each subpopulation is limited by their disjunct distribution. The stretch of unsuitable habitat separating the subpopulations prevents individuals from dispersing from one subpopulation to another. This isolation renders the subpopulations vulnerable to extirpation because individuals are unable to recolonize portions of the range following stochastic disturbances that eliminate entire mussel beds or a subpopulation.

The Canoe Creek clubshell's ability to withstand catastrophic events (redundancy) is also limited primarily because of its narrow range. Severe droughts resulting in decreased water quality and direct mortality were likely the primary causes of the species' recent decline. This is in part because of the species' limited ability to withstand this type of catastrophic event. Compared to a more wide-ranging species whose risk is spread over multiple populations across its range, the entirety of the clubshell's range is impacted by a severe drought event. However, the impacts of other potential catastrophic events, such as contaminant spills, may be restricted to a portion of the clubshell's range, especially because the species' subpopulations are not directly downstream from one another.

The ability of the Canoe Creek clubshell to adapt to changing environmental conditions (representation) over time is also likely limited. There are no studies that have explicitly explored the species' adaptive capacity or the fundamental components—phenotypic plasticity, dispersal ability, and genetic diversity—by which it is characterized. The clubshell is a narrow endemic, inhabiting a single watershed, and we do not observe any ecological, behavioral, or other form of diversity that may indicate adaptive capacity across its range; thus, we presume the species currently has limited ability to adapt to changing environmental conditions.

Future Condition

As part of the SSA, we also developed three future condition scenarios to capture the range of uncertainties regarding future threats and the projected responses by the Canoe Creek clubshell. Our scenarios assumed a moderate or enhanced probability of severe drought, and either propagation or no propagation of the species. Because we determined that the current condition of the Canoe Creek clubshell was consistent with an endangered species (see Determination of Species Status, below), we are not presenting the results of the future scenarios in this proposed rule. Please refer to the SSA report (Service 2020) for the full analysis of future scenarios.

Determination of the Canoe Creek Clubshell's Status

Section 4 of the Act (16 U.S.C. 1533) and its implementing regulations (50 CFR part 424) set forth the procedures for determining whether a species meets the definition of an endangered species or a threatened species. The Act defines an ''endangered species'' as a species that is ''in danger of extinction throughout all or a significant portion of its range,'' and a ''threatened species'' as a species that is ''likely to become an endangered species within the foreseeable future throughout all or a significant portion of its range.'' The Act requires that we determine whether a species meets the definition of ''endangered species'' or ''threatened species'' because of any of the following factors: (A) The present or threatened destruction, modification, or curtailment of its habitat or range; (B) Overutilization for commercial, recreational, scientific, or educational purposes; (C) Disease or predation; (D) The inadequacy of existing regulatory mechanisms; or (E) Other natural or manmade factors affecting its continued existence.

Status Throughout All of Its Range

After evaluating threats to the species and assessing the cumulative effect of the threats under the Act's section 4(a)(1) factors, we find that past and ongoing stressors including decreased water quality from drought, development, and agriculture, among other sources (Factor A), have reduced the resiliency of the Canoe Creek clubshell to such a degree that the species is particularly vulnerable to extinction. The Canoe Creek clubshell has likely always been a rare, narrow endemic within the Big Canoe Creek, and the species has some natural ability to withstand stochastic demographic fluctuations and catastrophic events such as a severe drought, which are characteristic of the environment in which it evolved. However, the frequency of severe drought events in the past two decades, combined with other ongoing habitat-related stressors and the mussel's naturally inefficient reproductive strategy, likely caused the decline of the species to its current vulnerable condition from which it is unable to recover naturally. The species' declining trend and inability to recover is evidenced by recent comprehensive surveys in both the western and eastern subpopulations that reveal the species is comprised of a limited number of older adults that are failing to recruit young. While we anticipate these threats will continue to act on the species in the future, they are affecting the species such that it is in danger of extinction now, and therefore we find that a threatened species status is not appropriate. We find that the Canoe Creek clubshell's vulnerability to ongoing stressors is heightened to such a degree that it is currently in danger of extinction as a result of its narrow range and critically low numbers. Thus, after assessing the best available information, we conclude that the Canoe Creek clubshell is in danger of extinction throughout all of its range.

Status Throughout a Significant Portion of Its Range

Under the Act and our implementing regulations, a species may warrant listing if it is in danger of extinction or likely to become so in the foreseeable future throughout all or a significant portion of its range. We have determined the Canoe Creek clubshell is in danger of extinction throughout all of its range and, accordingly, did not undertake an analysis of any significant portion of its range. Because we have determined the Canoe Creek clubshell warrants listing as endangered throughout all of its range, our determination is consistent with the decision in *Center for Biological Diversity* v. *Everson,* 2020 WL 437289 (D.D.C. Jan. 28, 2020), in which the court vacated the aspect of our Final Policy on Interpretation of the Phrase ''Significant Portion of Its Range'' in the Endangered Species Act's Definitions of ''Endangered Species'' and ''Threatened Species'' (79 FR 37578; July 1, 2014) that provided that the Service and the National Marine Fisheries Service do not undertake an analysis of significant portions of a species' range if the species warrants listing as threatened throughout all of its range.

Determination of Status

Our review of the best available scientific and commercial information indicates that the Canoe Creek clubshell meets the definition of an endangered species. Therefore, we propose to list the Canoe Creek clubshell as an endangered species in accordance with sections 3(6) and 4(a)(1) of the Act.

Available Conservation Measures

Conservation measures provided to species listed as endangered or threatened species under the Act include recognition, recovery actions, requirements for Federal protection, and prohibitions against certain practices. Recognition through listing results in public awareness, and conservation by Federal, State, tribal, and local agencies, private organizations, and individuals. The Act encourages cooperation with the States and other countries and calls for recovery actions to be carried out for listed species. The protection required by Federal agencies and the prohibitions against certain activities are discussed, in part, below.

The primary purpose of the Act is the conservation of endangered and threatened species and the ecosystems upon which they depend. The ultimate goal of such conservation efforts is the recovery of these listed species, so that they no longer need the protective measures of the Act. Section 4(f) of the Act calls for the Service to develop and implement recovery plans for the conservation of endangered and threatened species. The recovery planning process involves the identification of actions that are necessary to halt or reverse the species' decline by addressing the threats to its survival and recovery. The goal of this process is to restore listed species to a point where they are secure, self-sustaining, and functioning components of their ecosystems.

Recovery planning consists of preparing draft and final recovery plans, beginning with the development of a recovery outline and making it available to the public within 30 days of a final listing determination. The recovery outline guides the immediate implementation of urgent recovery actions and describes the process to be used to develop a recovery plan. Revisions of the plan may be done to address continuing or new threats to the species, as new substantive information becomes available. The recovery plan also identifies recovery criteria for review of when a species may be ready for reclassification from endangered to threatened (''downlisting'') or removal from protected status (''delisting''), and methods for monitoring recovery progress. Recovery plans also establish a framework for agencies to coordinate their recovery efforts and provide estimates of the cost of implementing recovery tasks. Recovery teams (composed of species experts, Federal and State agencies, nongovernmental organizations, and stakeholders) are often established to develop recovery plans. When completed, the recovery outline, draft recovery plan, and the final recovery plan will be available on our website (*http://www.fws.gov/endangered*), or from our Alabama Ecological Services Field Office (see **FOR FURTHER INFORMATION CONTACT**).

Implementation of recovery actions generally requires the participation of a broad range of partners, including other Federal agencies, States, Tribes, nongovernmental organizations, businesses, and private landowners. Examples of recovery actions include habitat restoration (*e.g.,* restoration of native vegetation), research, captive propagation and reintroduction, and outreach and education. The recovery of many listed species cannot be accomplished solely on Federal lands because their range may occur primarily or solely on non-Federal lands. To achieve recovery of these species requires cooperative conservation efforts on private, State, and Tribal lands.

If this species is listed, funding for recovery actions will be available from a variety of sources, including Federal budgets, State programs, and cost-share grants for non-Federal landowners, the academic community, and nongovernmental organizations. In addition, pursuant to section 6 of the Act, the State of Alabama would be eligible for Federal funds to implement management actions that promote the protection or recovery of the Canoe Creek clubshell. Information on our grant programs that are available to aid species recovery can be found at: *http://www.fws.gov/grants.*

Although the Canoe Creek clubshell is only proposed for listing under the Act at this time, please let us know if you are interested in participating in recovery efforts for this species. Additionally, we invite you to submit any new information on this species whenever it becomes available and any information you may have for recovery planning purposes (see **FOR FURTHER INFORMATION CONTACT**).

Section 7(a) of the Act requires Federal agencies to evaluate their actions with respect to any species that is proposed or listed as an endangered or threatened species and with respect to its critical habitat, if any is designated. Regulations implementing this interagency cooperation provision of the Act are codified at 50 CFR part 402. Section 7(a)(4) of the Act requires Federal agencies to confer with the Service on any action that is likely to jeopardize the continued existence of a species proposed for listing or result in destruction or adverse modification of proposed critical habitat. If a species is listed subsequently, section 7(a)(2) of the Act requires Federal agencies to ensure that activities they authorize, fund, or carry out are not likely to jeopardize the continued existence of the species or destroy or adversely modify its critical habitat. If a Federal action may affect a listed species or its critical habitat, the responsible Federal agency must enter into consultation with the Service.

Federal agency actions within the species' habitat that may require conference or consultation or both as described in the preceding paragraph include management and any other landscape-altering activities. These actions include work by the U.S. Fish and Wildlife Service under the Partners for Fish and Wildlife Program. This program provides technical and financial assistance to private landowners and Tribes who are willing to help meet habitat needs of Federal trust species. The Farm Service Agency administers the Conservation Reserve Program, which includes working with farmers and private landowners to use their environmentally sensitive agricultural land for conservation benefit. The Natural Resources Conservation Service works with private landowners under multiple Farm Bill programs, all aimed at the conservation of water and soil. The U.S. Army Corps of Engineers administers the issuance of section 404 Clean Water Act permits that regulate fill of wetlands, and the Federal Highway Administration regulates the construction and maintenance of roads or highways.

The Act and its implementing regulations set forth a series of general prohibitions and exceptions that apply to endangered wildlife. The prohibitions of section 9(a)(1) of the Act, codified at 50 CFR 17.21, make it illegal for any person subject to the jurisdiction of the United States to take (which includes harass, harm, pursue, hunt, shoot, wound, kill, trap, capture, or collect; or to attempt any of these) endangered fish or wildlife within the United States or on the high seas. In addition, it is unlawful to import; export; deliver, receive, carry, transport, or ship in interstate or foreign commerce in the course of commercial activity; or sell or offer for sale in interstate or foreign commerce any species listed as an

endangered species. It is also illegal to possess, sell, deliver, carry, transport, or ship any such wildlife that has been taken illegally. Certain exceptions apply to employees of the Service, the National Marine Fisheries Service, other Federal land management agencies, and State conservation agencies.

We may issue permits to carry out otherwise prohibited activities involving endangered wildlife under certain circumstances. Regulations governing permits are codified at 50 CFR 17.22. With regard to endangered wildlife, a permit may be issued for the following purposes: For scientific purposes, to enhance the propagation or survival of the species, and for incidental take in connection with otherwise lawful activities. There are also certain statutory exemptions from the prohibitions, which are found in sections 9 and 10 of the Act.

It is our policy, as published in the **Federal Register** on July 1, 1994 (59 FR 34272), to identify to the maximum extent practicable at the time a species is listed, those activities that would or would not constitute a violation of section 9 of the Act. The intent of this policy is to increase public awareness of the effect of a proposed listing on proposed and ongoing activities within the range of the species proposed for listing. Based on the best available information, the following actions are unlikely to result in a violation of section 9, if these activities are carried out in accordance with existing regulations and permit requirements; this list is not comprehensive:

(1) Normal agricultural and silvicultural practices, including herbicide and pesticide use, that are carried out in accordance with any existing regulations, permit and label requirements, and best management practices.

(2) Normal residential development and landscape activities that are carried out in accordance with any existing regulations, permit requirements, and best management practices.

(3) Normal recreational hunting, fishing, or boating activities that are carried out in accordance with all existing hunting, fishing, and boating regulations, and following reasonable practices and standards.

Based on the best available information, the following activities, which are activities that the Service finds could potentially harm the Canoe Creek clubshell and result in ''take'' of the species, may potentially result in a violation of section 9 of the Act if they are not authorized in accordance with applicable law; this list is not comprehensive:

(1) Unauthorized collecting, handling, possessing, selling, delivering, carrying, or transporting of the Canoe Creek clubshell, including import or export across State lines and international boundaries, except for properly documented antique specimens of the taxon at least 100 years old, as defined by section 10(h)(1) of the Act.

(2) Unauthorized modification of the channel, substrate, temperature, or water flow of any stream or water body in which the Canoe Creek clubshell is known to occur.

(3) Unauthorized discharge of chemicals or fill material into any waters in which the Canoe Creek clubshell is known to occur.

(4) Introduction of nonnative species that compete with or prey upon the Canoe Creek clubshell, such as the zebra mussel (*Dreissena polymorpha*) and Asian clam (*Corbicula fluminea*).

(5) Pesticide applications in violation of label restrictions.

Questions regarding whether specific activities would constitute a violation of section 9 of the Act should be directed to the Alabama Ecological Services Field Office (see **FOR FURTHER INFORMATION CONTACT**).

II. Critical Habitat

Background

Critical habitat is defined in section 3 of the Act as:

(1) The specific areas within the geographical area occupied by the species, at the time it is listed in accordance with the Act, on which are found those physical or biological features

(a) Essential to the conservation of the species, and

(b) Which may require special management considerations or protection; and

(2) Specific areas outside the geographical area occupied by the species at the time it is listed, upon a determination that such areas are essential for the conservation of the species.

Our regulations at 50 CFR 424.02 define the geographical area occupied by the species as an area that may generally be delineated around species' occurrences, as determined by the Secretary (*i.e.,* range). Such areas may include those areas used throughout all or part of the species' life cycle, even if not used on a regular basis (*e.g.,* migratory corridors, seasonal habitats, and habitats used periodically, but not solely by vagrant individuals).

Conservation, as defined under section 3 of the Act, means to use and the use of all methods and procedures that are necessary to bring an endangered or threatened species to the point at which the measures provided pursuant to the Act are no longer necessary. Such methods and procedures include, but are not limited to, all activities associated with scientific resources management such as research, census, law enforcement, habitat acquisition and maintenance, propagation, live trapping, and transplantation, and, in the extraordinary case where population pressures within a given ecosystem cannot be otherwise relieved, may include regulated taking.

Critical habitat receives protection under section 7 of the Act through the requirement that Federal agencies ensure, in consultation with the Service, that any action they authorize, fund, or carry out is not likely to result in the destruction or adverse modification of critical habitat. The designation of critical habitat does not affect land ownership or establish a refuge, wilderness, reserve, preserve, or other conservation area. Designation also does not allow the government or public to access private lands, nor does designation require implementation of restoration, recovery, or enhancement measures by non-Federal landowners. Where a landowner requests Federal agency funding or authorization for an action that may affect a listed species or critical habitat, the Federal agency would be required to consult with the Service under section 7(a)(2) of the Act. However, even if the Service were to conclude that the proposed activity would result in destruction or adverse modification of the critical habitat, the Federal action agency and the landowner are not required to abandon the proposed activity, or to restore or recover the species; instead, they must implement ''reasonable and prudent alternatives'' to avoid destruction or adverse modification of critical habitat.

Under the first prong of the Act's definition of critical habitat, areas within the geographical area occupied by the species at the time it was listed are included in a critical habitat designation if they contain physical or biological features (1) which are essential to the conservation of the species and (2) which may require special management considerations or protection. For these areas, critical habitat designations identify, to the extent known using the best scientific and commercial data available, those physical or biological features that are essential to the conservation of the species (such as space, food, cover, and protected habitat). In identifying those physical or biological features that occur

in specific occupied areas, we focus on the specific features that are essential to support the life-history needs of the species, including, but not limited to, water characteristics, soil type, geological features, prey, vegetation, symbiotic species, or other features. A feature may be a single habitat characteristic or a more complex combination of habitat characteristics. Features may include habitat characteristics that support ephemeral or dynamic habitat conditions. Features may also be expressed in terms relating to principles of conservation biology, such as patch size, distribution distances, and connectivity.

Under the second prong of the Act's definition of critical habitat, we can designate critical habitat in areas outside the geographical area occupied by the species at the time it is listed, upon a determination that such areas are essential for the conservation of the species. When designating critical habitat, the Secretary will first evaluate areas occupied by the species. The Secretary will only consider unoccupied areas to be essential where a critical habitat designation limited to geographical areas occupied by the species would be inadequate to ensure the conservation of the species. In addition, for an unoccupied area to be considered essential, the Secretary must determine that there is a reasonable certainty both that the area will contribute to the conservation of the species and that the area contains one or more of those physical or biological features essential to the conservation of the species.

Section 4 of the Act requires that we designate critical habitat on the basis of the best scientific data available. Further, our Policy on Information Standards Under the Endangered Species Act (published in the **Federal Register** on July 1, 1994 (59 FR 34271)), the Information Quality Act (section 515 of the Treasury and General Government Appropriations Act for Fiscal Year 2001 (Pub. L. 106–554; H.R. 5658)), and our associated Information Quality Guidelines provide criteria, establish procedures, and provide guidance to ensure that our decisions are based on the best scientific data available. They require our biologists, to the extent consistent with the Act and with the use of the best scientific data available, to use primary and original sources of information as the basis for recommendations to designate critical habitat.

When we are determining which areas should be designated as critical habitat, our primary source of information is generally the information from the SSA report and information developed during the listing process for the species. Additional information sources may include any generalized conservation strategy, criteria, or outline that may have been developed for the species; the recovery plan for the species; articles in peer-reviewed journals; conservation plans developed by States and counties; scientific status surveys and studies; biological assessments; other unpublished materials; or experts' opinions or personal knowledge.

Habitat is dynamic, and species may move from one area to another over time. We recognize that critical habitat designated at a particular point in time may not include all of the habitat areas that we may later determine are necessary for the recovery of the species. For these reasons, a critical habitat designation does not signal that habitat outside the designated area is unimportant or may not be needed for recovery of the species. Areas that are occupied by the species and important to the conservation of the species, both inside and outside the critical habitat designation, will continue to be subject to: (1) Conservation actions implemented under section 7(a)(1) of the Act; (2) regulatory protections afforded by the requirement in section 7(a)(2) of the Act for Federal agencies to ensure their actions are not likely to jeopardize the continued existence of any endangered or threatened species; and (3) the prohibitions found in section 9 of the Act. Federally funded or permitted projects affecting listed species outside their designated critical habitat areas may still result in jeopardy findings in some cases. These protections and conservation tools will continue to contribute to recovery of this species. Similarly, critical habitat designations made on the basis of the best available information at the time of designation will not control the direction and substance of future recovery plans, habitat conservation plans (HCPs), or other species conservation planning efforts if new information available at the time of these planning efforts calls for a different outcome.

Prudency Determination

Section 4(a)(3) of the Act, as amended, and implementing regulations (50 CFR 424.12), require that, to the maximum extent prudent and determinable, the Secretary shall designate critical habitat at the time the species is determined to be an endangered or threatened species. Our regulations (50 CFR 424.12(a)(1)) state that the Secretary may, but is not required to, determine that a designation would not be prudent in the following circumstances:

(i) The species is threatened by taking or other human activity and identification of critical habitat can be expected to increase the degree of such threat to the species;

(ii) The present or threatened destruction, modification, or curtailment of a species' habitat or range is not a threat to the species, or threats to the species' habitat stem solely from causes that cannot be addressed through management actions resulting from consultations under section 7(a)(2) of the Act;

(iii) Areas within the jurisdiction of the United States provide no more than negligible conservation value, if any, for a species occurring primarily outside the jurisdiction of the United States;

(iv) No areas meet the definition of critical habitat; or

(v) The Secretary otherwise determines that designation of critical habitat would not be prudent based on the best scientific data available.

As discussed earlier in the document, there is currently no imminent threat of take attributed to collection or vandalism identified under Factor B for this species, and identification and mapping of critical habitat is not expected to initiate any such threat. In our SSA and proposed listing determination for the Canoe Creek clubshell, we determined that the present or threatened destruction, modification, or curtailment of habitat or range is a threat to the Canoe Creek clubshell and that those threats in some way can be addressed by section 7(a)(2) consultation measures. The species occurs wholly in the jurisdiction of the United States, and we are able to identify areas that meet the definition of critical habitat. Therefore, because none of the circumstances enumerated in our regulations at 50 CFR 424.12(a)(1) apply and because there are no other circumstances the Secretary has identified for which this designation of critical habitat would be not prudent, we have determined that the designation of critical habitat is prudent for the Canoe Creek clubshell.

Critical Habitat Determinability

Having determined that designation is prudent, under section 4(a)(3) of the Act we must find whether critical habitat for the Canoe Creek clubshell is determinable. Our regulations at 50 CFR 424.12(a)(2) state that critical habitat is not determinable when one or both of the following situations exist:

(i) Data sufficient to perform required analyses are lacking, or

(ii) The biological needs of the species are not sufficiently well known to identify any area that meets the definition of ''critical habitat.''

When critical habitat is not determinable, the Act allows the Service an additional year to publish a critical habitat designation (16 U.S.C. 1533(b)(6)(C)(ii)).

We reviewed the available information pertaining to the biological needs of the species and habitat characteristics where this species is located. This and other information represent the best scientific data available and led us to conclude that the designation of critical habitat is determinable for the Canoe Creek clubshell.

Physical or Biological Features Essential to the Conservation of the Species

In accordance with section 3(5)(A)(i) of the Act and regulations at 50 CFR 424.12(b), in determining which areas we will designate as critical habitat from within the geographical area occupied by the species at the time of listing, we consider the physical or biological features that are essential to the conservation of the species and that may require special management considerations or protection. The regulations at 50 CFR 424.02 define ''physical or biological features essential to the conservation of the species'' as the features that occur in specific areas and that are essential to support the life-history needs of the species, including, but not limited to, water characteristics, soil type, geological features, sites, prey, vegetation, symbiotic species, or other features. A feature may be a single habitat characteristic, or a more complex combination of habitat characteristics. Features may include habitat characteristics that support ephemeral or dynamic habitat conditions. Features may also be expressed in terms relating to principles of conservation biology, such as patch size, distribution distances, and connectivity.

For example, physical features essential to the conservation of the species might include gravel of a particular size required for spawning, alkaline soil for seed germination, protective cover for migration, or susceptibility to flooding or fire that maintains necessary early-successional habitat characteristics. Biological features might include prey species, forage grasses, specific kinds or ages of trees for roosting or nesting, symbiotic fungi, or a particular level of nonnative species consistent with conservation needs of the listed species. The features may also be combinations of habitat characteristics and may encompass the relationship between characteristics or the necessary amount of a characteristic essential to support the life history of the species. In considering whether features are essential to the conservation of the species, the Service may consider an appropriate quality, quantity, and spatial and temporal arrangement of habitat characteristics in the context of the life-history needs, condition, and status of the species. These characteristics include, but are not limited to, space for individual and population growth and for normal behavior; food, water, air, light, minerals, or other nutritional or physiological requirements; cover or shelter; sites for breeding, reproduction, or rearing (or development) of offspring; and habitats that are protected from disturbance.

Canoe Creek clubshells live in freshwater rivers and streams. Clubshells, like other freshwater mussels, live in aggregations called mussel beds, which can be patchily distributed throughout an occupied river or stream reach, but together comprise a mussel population. Mussel beds are connected to one another when host fish infested by mussel larvae in one bed disperse the larvae to another bed. While adults are mostly sedentary, larval dispersal among beds causes mussel density and abundance to vary dynamically throughout an occupied reach over time. Connectivity among beds and populations is essential for maintaining resilient populations because it allows for recolonization of areas following stochastic events. Populations that do not occupy a long enough reach or have too few or sparsely distributed beds are vulnerable to extirpation.

The primary requirements for individual Canoe Creek clubshells include the following: Stable instream substrate for attaching and sheltering; clean, flowing water to keep substrates free from excess sedimentation and to facilitate host fish interactions and feeding; appropriate water quality and temperatures to meet physiological needs for survival, growth, and reproduction; food and nutrients to survive and grow; and host fish for reproduction and dispersal (see *Individual, Subpopulation, and Species Needs,* above, for more discussion of these needs).

Summary of Essential Physical or Biological Features

We derive the specific physical or biological features essential to the conservation of the Canoe Creek clubshell from studies of the species' habitat, ecology, and life history as described below. Additional information can be found in the SSA report (Service 2020, entire; available on *http://www.regulations.gov* under Docket No. FWS–R4–ES–2020–0078). We have determined that the following physical or biological features are essential to the conservation of the Canoe Creek clubshell:

(1) Suitable substrates and connected instream habitats, characterized by a geomorphically stable stream channel (a channel that maintains its lateral dimensions, longitudinal profile, and spatial pattern over time without aggrading or degrading bed elevation) and connected instream habitats (*e.g.,* stable riffle-run-pool habitats that provide flow refuges consisting of silt-free gravel and coarse sand substrates).

(2) A hydrologic flow regime (*i.e.,* the magnitude, frequency, duration, and seasonality of discharge over time) necessary to maintain benthic habitats where the species is found; to maintain connectivity of streams with the floodplain; and to provide for normal behavior, growth, and survival of all life stages of Canoe Creek clubshell mussels and their fish hosts.

(3) Water quality (including, but not limited to, temperature, conductivity, hardness, turbidity, ammonia, heavy metals, oxygen content, and other chemical characteristics) necessary to sustain natural physiological processes for normal behavior, growth, and viability of all life stages of Canoe Creek clubshell mussels and their fish hosts.

(4) Sediment quality (including, but not limited to, coarse sand and/or gravel substrates with low to moderate amounts of fine sediment, low amounts of attached filamentous algae, and other physical and chemical characteristics) necessary for normal behavior, growth, and viability of all life stages of Canoe Creek clubshell mussels and their fish hosts.

(5) The presence and abundance of known fish hosts, which may include the tricolor shiner (*Cyprinella trichroistia*), Alabama shiner (*C. callistia*), and striped shiner (*Luxilus chrysocephalus*), necessary for recruitment of the Canoe Creek clubshell mussel.

Special Management Considerations or Protection

When designating critical habitat, we assess whether the specific areas within the geographical area occupied by the species at the time of listing contain features which are essential to the conservation of the species and which may require special management

considerations or protection. The features essential to the conservation of the Canoe Creek clubshell may require special management considerations or protections to ensure that conditions do not degrade. Examples of these threats include excessive amounts of fine sediment deposited in the channel, changes in water quality (impairment), activities that cause a destabilization of the stream channel and/or its banks, loss of riparian cover, and altered hydrology from inundation, channelization, withdrawals, or flow loss/scour resulting from other human-induced perturbations.

Management activities that could ameliorate these threats include, but are not limited to: Use of best management practices designed to reduce sedimentation, erosion, and bank-side destruction; protection of riparian corridors and retention of sufficient canopy cover along banks; exclusion of livestock and nuisance wildlife (feral hogs, exotic ungulates); moderation of surface and ground water withdrawals to maintain natural flow regimes; increased use of stormwater management and reduction of stormwater flows into the systems; use of highest water quality standards for wastewater and other return flows; and reduction of other watershed and floodplain disturbances that release sediments, pollutants, or nutrients into the water.

In summary, we find that the areas we are proposing to designate as critical habitat contain the physical and biological features that are essential to the conservation of the species and that may require special management considerations or protection. Special management considerations or protection may be required of the Federal action agency to eliminate, or to reduce to negligible levels, the threats affecting the physical and biological features of each unit.

Criteria Used To Identify Critical Habitat

As required by section 4(b)(2) of the Act, we use the best scientific data available to designate critical habitat. In accordance with the Act and our implementing regulations at 50 CFR 424.12(b), we review available information pertaining to the habitat requirements of the species and identify specific areas within the geographical area occupied by the species at the time of listing and any specific areas outside the geographical area occupied by the species to be considered for designation as critical habitat. We are not currently proposing to designate any areas outside the geographical area occupied by the species because we have not identified any unoccupied areas that meet the definition of critical habitat. We defined ''occupied'' areas as stream channels with observations of one or more live individuals, or recent dead shell material, from 1999 to the present because Canoe Creek clubshells may be difficult to detect and some sites are not visited multiple times. Recently dead shell material at a site indicates the species is likely present in that area, given their average life span of 25 to 35 years. Using this definition, we considered portions of the Big Canoe Creek mainstem and portions of Little Canoe Creek in its eastern and western reaches as occupied by the Canoe Creek clubshell at the time of proposed listing. In 2017 and 2018, surveys confirmed occupancy of these river portions consistent with previous data collected.

The Canoe Creek clubshell has likely always been a narrow endemic within its single watershed. Therefore, the species' redundancy and representation is limited, but likely similar to that which it was historically. However, the species has an extremely limited ability to withstand stochastic events and disturbances because of its now critically low numbers. Conserving the species will therefore require increasing the species' abundance throughout its range and successful recruitment. Although conservation of the Canoe Creek clubshell will require improving the species' resiliency, we concluded that the occupied areas proposed as critical habitat are sufficient to ensure the conservation of the species. We are not currently proposing to designate any areas outside the geographical area occupied by the species because we have not identified any unoccupied areas that meet the definition of critical habitat.

Sources of data for this proposed critical habitat include multiple databases maintained by the Service, museums, universities, nongovernmental organizations (NGOs), and State agencies; scientific and agency reports; peer-reviewed journal articles; and numerous survey reports on streams throughout the species' range.

In summary, for areas within the geographic area occupied by the species at the time of proposed listing, we delineated critical habitat unit boundaries as follows: We evaluated habitat suitability of stream segments within the geographic area occupied at the time of listing, and retained those segments that contain some or all of the physical and biological features to support life-history functions essential for conservation of the species. Then, we assessed those occupied stream segments retained through the above analysis and refined the starting and ending points by evaluating the presence or absence of appropriate physical and biological features. We selected upstream and downstream cutoff points to reference existing easily recognizable landmarks, including stream confluences, highway crossings, and the Federal Energy Regulatory Commission boundary of H. Neely Henry Reservoir. Unless otherwise specified, any stream beds located directly beneath bridge crossings or other landmark features used to describe critical habitat spatially, such as stream confluences, are considered to be wholly included within the critical habitat unit. Critical habitat stream segments were then mapped using ArcGIS Pro version 2.3.3 (ESRI, Inc.), a Geographic Information Systems program.

When determining proposed critical habitat boundaries, we made every effort to avoid including developed areas such as lands covered by buildings, pavement, and other structures because such lands lack physical or biological features necessary for the Canoe Creek clubshell. The scale of the maps we prepared under the parameters for publication within the Code of Federal Regulations may not reflect the exclusion of such developed lands. Any such lands inadvertently left inside critical habitat boundaries shown on the maps of this proposed rule have been excluded by text in the proposed rule and are not proposed for designation as critical habitat. Therefore, if the critical habitat is finalized as proposed, a Federal action involving these lands would not trigger section 7 consultation with respect to critical habitat and the requirement of no adverse modification unless the specific action would affect the physical or biological features in the adjacent critical habitat.

We propose to designate as critical habitat lands that we have determined are occupied at the time of listing (*i.e.,* currently occupied) and contain one or more of the physical or biological features that are essential to support life-history processes of the species. Units are proposed for designation based on one or more of the physical or biological features being present to support the Canoe Creek clubshell's life-history processes. Both proposed units contain all of the identified physical or biological features and support multiple life-history processes.

The proposed critical habitat designation is defined by the map or maps, as modified by any accompanying regulatory text, presented at the end of

this document under Proposed Regulation Promulgation. We include more detailed information on the boundaries of the proposed critical habitat designation in the preamble of this document. We will make the coordinates or plot points or both on which each map is based available to the public on *http://www.regulations.gov* at Docket No. FWS–R4–ES–2020–0078 and on our internet site at *https://www.fws.gov/daphne.*

Proposed Critical Habitat Designation

We are proposing to designate approximately 58.5 river kilometers (km) (36.3 river miles (mi)) in two units as critical habitat for the Canoe Creek clubshell. The critical habitat areas we describe below constitute our current best assessment of areas that meet the definition of critical habitat for the Canoe Creek clubshell. The two units we propose as critical habitat are: (1) Little Canoe Creek East and (2) Big Canoe Creek/Little Canoe Creek West. Table 1 shows the proposed critical habitat units and the approximate area of each unit. In Alabama, all waters are held within the public trust. The Service will consult with the State to confirm the status of ownership of the river bottoms in these river segments. This information will be made available in our final rule published in the **Federal Register**.

TABLE 1—PROPOSED CRITICAL HABITAT UNITS FOR THE CANOE CREEK CLUBSHELL

[Area estimates reflect all land within critical habitat unit boundaries]

Critical habitat unit	Adjacent land ownership by type	Size of unit in kilometers (miles)	Occupied?
1. Little Canoe Creek East	Private, County	9.7 (6.0)	Yes.
2. Big Canoe Creek/Little Canoe Creek West	Private	48.8 (30.3)	Yes.
Total		58.5 (36.3)	Yes.

Note: Area sizes may not sum due to rounding.

We present brief descriptions of both units, and reasons why they meet the definition of critical habitat for the Canoe Creek clubshell, below.

Unit 1: Little Canoe Creek East

Unit 1 consists of 9.7 river km (6.0 river mi) of Little Canoe Creek East, due east of the Town of Steele, in St. Clair and Etowah Counties, Alabama. The unit consists of the Little Canoe Creek mainstem from the intersection with the Federal Energy Regulatory Commission boundary of H. Neely Henry Reservoir (at elevation 155 meters (m) (509 feet (ft)) above mean sea level and approximately 4.4 river km (2.7 river mi) upstream of its confluence with Big Canoe Creek), upstream 9.7 river km (6.0 river mi) to the U.S. Highway 11 bridge crossing.

This unit is currently occupied by the Canoe Creek clubshell. The majority of the adjacent land surrounding this unit is privately owned. A small amount of the adjacent land is publicly owned in the form of bridge crossings and easements, and portions of the eastern bank of Little Canoe Creek between U.S. Highway 11 to Interstate 59, in Etowah County, Alabama. Approximately 2.4 river km (1.5 river mi) of Little Canoe Creek borders property to the east owned by Etowah County, Alabama.

Unit 1 contains all physical or biological features essential to the conservation of the species. The channel within Unit 1 is relatively stable and provides the necessary riffle-run-pool sequences required by the Canoe Creek clubshell. A continued hydrologic flow regime with adequate water quality and limited fine sediments are present within this unit, providing habitat features that support the Canoe Creek clubshell. The unit also contains fish hosts for the clubshell. The physical and biological features in this unit may require special management considerations or protections to ensure that conditions do not further degrade. Examples of these threats include excessive amounts of fine sediment deposited in the channel, changes in water quality (impairment), activities that cause a destabilization of the stream channel and/or its banks, loss of riparian cover, and altered hydrology from either inundation, channelization, withdrawals, or flow loss/scour resulting from other human-induced perturbations (see Special Management Considerations or Protection, above).

Unit 2: Big Canoe Creek/Little Canoe Creek West

Unit 2 consists of 48.8 river km (30.3 river mi) of Big Canoe Creek and its tributary Little Canoe Creek West, which are located geographically between the cities of Springville and Ashville, St. Clair County, Alabama. The unit consists of the main channel of Big Canoe Creek from the Double Bridge Road bridge crossing near Ashville, Alabama, upstream 32.2 river km (20.0 river mi) to the Washington Valley Rd (St. Clair County Road 23) bridge crossing near Springville, Alabama; and Little Canoe Creek West from its confluence with Big Canoe Creek, upstream 16.6 river km (10.3 river mi) to the confluence of Stovall Branch. This unit is currently occupied by the Canoe Creek clubshell. The majority of this unit is adjacent to private land, except for any small amount of adjacent land that is publicly owned in the form of bridge crossings and easements.

Unit 2 contains all physical or biological features essential to the conservation of the species. The channel within Unit 2 is relatively stable and provides the necessary riffle-run-pool sequences required by the Canoe Creek Clubshell. A continued hydrologic flow regime with adequate water quality and limited fine sediments is present within this unit, providing habitat features that support the Canoe Creek clubshell. A diverse fish fauna, including fish hosts for the clubshell, are known from this unit. The physical and biological features in this unit may require special management considerations or protections to ensure that conditions do not degrade. Examples of these threats include excessive amounts of fine sediment deposited in the channel, changes in water quality (impairment), activities that cause a destabilization of the stream channel and/or its banks, loss of riparian cover, and altered hydrology from either inundation, channelization, withdrawals, or flow loss/scour resulting from other human-induced perturbations (see Special Management Considerations or Protection, above).

Effects of Critical Habitat Designation

Section 7 Consultation

Section 7(a)(2) of the Act requires Federal agencies, including the Service, to ensure that any action they fund, authorize, or carry out is not likely to jeopardize the continued existence of any endangered species or threatened species or result in the destruction or adverse modification of designated critical habitat of such species. In addition, section 7(a)(4) of the Act requires Federal agencies to confer with the Service on any agency action which is likely to jeopardize the continued existence of any species proposed to be listed under the Act or result in the destruction or adverse modification of proposed critical habitat.

We published a final rule revising the definition of ''destruction or adverse modification'' on August 27, 2019 (84 FR 44976). Destruction or adverse modification means a direct or indirect alteration that appreciably diminishes the value of critical habitat as a whole for the conservation of a listed species.

If a Federal action may affect a listed species or its critical habitat, the responsible Federal agency (action agency) must enter into consultation with us. Examples of actions that are subject to the section 7 consultation process are actions on State, tribal, local, or private lands that require a Federal permit (such as a permit from the U.S. Army Corps of Engineers under section 404 of the Clean Water Act (33 U.S.C. 1251 *et seq.*) or a permit from the Service under section 10 of the Act) or that involve some other Federal action (such as funding from the Federal Highway Administration, Federal Aviation Administration, or the Federal Emergency Management Agency). Federal actions not affecting listed species or critical habitat—and actions on State, tribal, local, or private lands that are not federally funded, authorized, or carried out by a Federal agency—do not require section 7 consultation.

Compliance with the requirements of section 7(a)(2), is documented through our issuance of:

(1) A concurrence letter for Federal actions that may affect, but are not likely to adversely affect, listed species or critical habitat; or

(2) A biological opinion for Federal actions that may affect, and are likely to adversely affect, listed species or critical habitat.

When we issue a biological opinion concluding that a project is likely to jeopardize the continued existence of a listed species and/or destroy or adversely modify critical habitat, we provide reasonable and prudent alternatives to the project, if any are identifiable, that would avoid the likelihood of jeopardy and/or destruction or adverse modification of critical habitat. We define ''reasonable and prudent alternatives'' (at 50 CFR 402.02) as alternative actions identified during consultation that:

(1) Can be implemented in a manner consistent with the intended purpose of the action,

(2) Can be implemented consistent with the scope of the Federal agency's legal authority and jurisdiction,

(3) Are economically and technologically feasible, and

(4) Would, in the Service Director's opinion, avoid the likelihood of jeopardizing the continued existence of the listed species and/or avoid the likelihood of destroying or adversely modifying critical habitat.

Reasonable and prudent alternatives can vary from slight project modifications to extensive redesign or relocation of the project. Costs associated with implementing a reasonable and prudent alternative are similarly variable.

Regulations at 50 CFR 402.16 set forth requirements for Federal agencies to reinitiate formal consultation on previously reviewed actions. These requirements apply when the Federal agency has retained discretionary involvement or control over the action (or the agency's discretionary involvement or control is authorized by law) and, subsequent to the previous consultation, we have listed a new species or designated critical habitat that may be affected by the Federal action, or the action has been modified in a manner that affects the species or critical habitat in a way not considered in the previous consultation. In such situations, Federal agencies sometimes may need to request reinitiation of consultation with us, but the regulations also specify some exceptions to the requirement to reinitiate consultation on specific land management plans after subsequently listing a new species or designating new critical habitat. See the regulations for a description of those exceptions.

Application of the ''Destruction or Adverse Modification'' Standard

The key factor related to the destruction or adverse modification determination is whether implementation of the proposed Federal action directly or indirectly alters the designated critical habitat in a way that appreciably diminishes the value of the critical habitat as a whole for the conservation of the listed species. As discussed above, the role of critical habitat is to support physical or biological features essential to the conservation of a listed species and provide for the conservation of the species.

Section 4(b)(8) of the Act requires us to briefly evaluate and describe, in any proposed or final regulation that designates critical habitat, activities involving a Federal action that may violate section 7(a)(2) of the Act by destroying or adversely modifying such habitat, or that may be affected by such designation.

Activities that the Services may, during a consultation under section 7(a)(2) of the Act, find are likely to destroy or adversely modify critical habitat include, but are not limited to:

(1) Actions that would alter the geomorphology of stream and river habitats. Such activities could include, but are not limited to, instream excavation or dredging, impoundment, channelization, sand and gravel mining, clearing riparian vegetation, and discharge of fill materials. These activities could cause aggradation or degradation of the channel bed elevation or significant bank erosion and result in entrainment or burial of this mussel, and could cause other direct or cumulative adverse effects to this species and its life cycles.

(2) Actions that would significantly alter the existing flow regime where this species occurs. Such activities could include, but are not limited to, impoundment, urban development, water diversion, and water withdrawal. These activities could eliminate or reduce the habitat necessary for growth and reproduction of this mussel and its fish hosts.

(3) Actions that would significantly alter water chemistry or water quality (for example, temperature, pH, contaminants, and excess nutrients). Such activities could include, but are not limited to, hydropower discharges, or the release of chemicals, biological pollutants, or heated effluents into surface water or connected groundwater at a point source or by dispersed release (nonpoint source). These activities could alter water conditions that are beyond the tolerances of this mussel, its fish hosts, or both, and result in direct or cumulative adverse effects to the species throughout its life cycle.

(4) Actions that would significantly alter stream bed material composition and quality by increasing sediment deposition or filamentous algal growth. Such activities could include, but are not limited to, construction projects, gravel and sand mining, oil and gas development, coal mining, livestock

grazing, timber harvest, and other watershed and floodplain disturbances that release sediments or nutrients into the water. These activities could eliminate or reduce habitats necessary for the growth and reproduction of this mussel, its fish hosts, or both, by causing excessive sedimentation and burial of the species or its habitat, or nutrification leading to excessive filamentous algal growth. Excessive filamentous algal growth can cause reduced nighttime dissolved oxygen levels through respiration, and prevent juvenile mussels from settling into stream sediments.

Exemptions

Application of Section 4(a)(3) of the Act

Section 4(a)(3)(B)(i) of the Act (16 U.S.C. 1533(a)(3)(B)(i)) provides that the Secretary shall not designate as critical habitat any lands or other geographical areas owned or controlled by the Department of Defense, or designated for its use, that are subject to an integrated natural resources management plan (INRMP) prepared under section 101 of the Sikes Act (16 U.S.C. 670a), if the Secretary determines in writing that such plan provides a benefit to the species for which critical habitat is proposed for designation. There are no Department of Defense (DoD) lands within the proposed critical habitat designation.

Consideration of Impacts Under Section 4(b)(2) of the Act

Section 4(b)(2) of the Act states that the Secretary shall designate and make revisions to critical habitat on the basis of the best available scientific data after taking into consideration the economic impact, national security impact, and any other relevant impact of specifying any particular area as critical habitat. The Secretary may exclude an area from critical habitat if he determines that the benefits of such exclusion outweigh the benefits of specifying such area as part of the critical habitat, unless he determines, based on the best scientific data available, that the failure to designate such area as critical habitat will result in the extinction of the species. In making the determination to exclude a particular area, the statute on its face, as well as the legislative history, are clear that the Secretary has broad discretion regarding which factor(s) to use and how much weight to give to any factor.

We describe below the process that we undertook for taking into consideration each category of impacts and our analyses of the relevant impacts.

Consideration of Economic Impacts

Section 4(b)(2) of the Act and its implementing regulations require that we consider the economic impact that may result from a designation of critical habitat. To assess the probable economic impacts of a designation, we must first evaluate specific land uses or activities and projects that may occur in the area of the critical habitat. We then must evaluate the impacts that a specific critical habitat designation may have on restricting or modifying specific land uses or activities for the benefit of the species and its habitat within the areas proposed. We then identify which conservation efforts may be the result of the species being listed under the Act versus those attributed solely to the designation of critical habitat for this particular species. The probable economic impact of a proposed critical habitat designation is analyzed by comparing scenarios both ''with critical habitat'' and ''without critical habitat.''

The ''without critical habitat'' scenario represents the baseline for the analysis, which includes the existing regulatory and socio-economic burden imposed on landowners, managers, or other resource users potentially affected by the designation of critical habitat (*e.g.,* under the Federal listing as well as other Federal, State, and local regulations). The baseline, therefore, represents the costs of all efforts attributable to the listing of the species under the Act (*i.e.,* conservation of the species and its habitat incurred regardless of whether critical habitat is designated). The ''with critical habitat'' scenario describes the incremental impacts associated specifically with the designation of critical habitat for the species. The incremental conservation efforts and associated impacts would not be expected without the designation of critical habitat for the species. In other words, the incremental costs are those attributable solely to the designation of critical habitat, above and beyond the baseline costs. These are the costs we use when evaluating the benefits of inclusion and exclusion of particular areas from the final designation of critical habitat should we choose to conduct a discretionary 4(b)(2) exclusion analysis.

For this particular designation, we developed an incremental effects memorandum (IEM) considering the probable incremental economic impacts that may result from this proposed designation of critical habitat. The information contained in our IEM was then used to develop a screening analysis of the probable effects of the designation of critical habitat for the Canoe Creek clubshell (IEc 2019, entire). We began by conducting a screening analysis of the proposed designation of critical habitat in order to focus our analysis on the key factors that are likely to result in incremental economic impacts. The purpose of the screening analysis is to filter out particular geographic areas of critical habitat that are already subject to such protections and are, therefore, unlikely to incur incremental economic impacts. In particular, the screening analysis considers baseline costs (*i.e.,* absent critical habitat designation) and includes probable economic impacts where land and water use may be subject to conservation plans, land management plans, best management practices, or regulations that protect the habitat area as a result of the Federal listing status of the species. Ultimately, the screening analysis allows us to focus our analysis on evaluating the specific areas or sectors that may incur probable incremental economic impacts as a result of the designation. If there are any unoccupied units in the proposed critical habitat designation, the screening analysis assesses whether any additional management or conservation efforts may incur incremental economic impacts. This screening analysis combined with the information contained in our IEM are what we consider our draft economic analysis (DEA) of the proposed critical habitat designation for the Canoe Creek clubshell; our DEA is summarized in the narrative below.

Executive Orders (E.O.s) 12866 and 13563 direct Federal agencies to assess the costs and benefits of available regulatory alternatives in quantitative (to the extent feasible) and qualitative terms. Consistent with the E.O. regulatory analysis requirements, our effects analysis under the Act may take into consideration impacts to both directly and indirectly affected entities, where practicable and reasonable. If sufficient data are available, we assess to the extent practicable the probable impacts to both directly and indirectly affected entities. As part of our screening analysis, we considered the types of economic activities that are likely to occur within the areas likely affected by the critical habitat designation. In our evaluation of the probable incremental economic impacts that may result from the proposed designation of critical habitat for the Canoe Creek clubshell, first we identified, in the IEM dated November 27, 2019, probable incremental economic impacts associated with the following categories of activities: (1)

Agriculture, (2) poultry farming, (3) grazing, (4) development, (5) recreation, (6) restoration activities, (7) flood control, (8) transportation, and (9) utilities. We considered each industry or category individually. Additionally, we considered whether their activities have any Federal involvement. Critical habitat designation generally will not affect activities that do not have any Federal involvement; under the Act, designation of critical habitat only affects activities conducted, funded, permitted, or authorized by Federal agencies. If we list the species, in areas where the Canoe Creek clubshell is present, Federal agencies would be required to consult with the Service under section 7 of the Act on activities they fund, permit, or implement that may affect the species. If, when we list the species, we also finalize this proposed critical habitat designation, consultations to avoid the destruction or adverse modification of critical habitat would be incorporated into the existing consultation process.

In our IEM, we attempted to clarify the distinction between the effects that will result from the species being listed and those attributable to the critical habitat designation (*i.e.,* difference between the jeopardy and adverse modification standards) for the Canoe Creek clubshell's critical habitat. Because the designation of critical habitat for the Canoe Creek clubshell is proposed concurrently with the listing, it has been our experience that it is more difficult to discern which conservation efforts are attributable to the species being listed and those which will result solely from the designation of critical habitat. However, the following specific circumstances in this case help to inform our evaluation: (1) The essential physical or biological features identified for critical habitat are the same features essential for the life requisites of the species, and (2) any actions that would result in sufficient harm or harassment to constitute jeopardy to the Canoe Creek clubshell would also likely adversely affect the essential physical or biological features of critical habitat. The IEM outlines our rationale concerning this limited distinction between baseline conservation efforts and incremental impacts of the designation of critical habitat for this species. This evaluation of the incremental effects has been used as the basis to evaluate the probable incremental economic impacts of this proposed designation of critical habitat.

The evaluation of incremental costs of designating critical habitat for the Canoe Creek clubshell indicates costs are relatively low. The proposed critical habitat designation for the Canoe Creek clubshell totals approximately 58.5 river kilometers (36.3 river miles) of river adjacent to private property across two currently occupied units in the Big Canoe Creek watershed. Numerous other listed species co-occur with the Canoe Creek clubshell in these areas (*e.g.,* Georgia pigtoe, finelined pocketbook (*Hamiota altilis*), and triangular kidneyshell (*Ptychobranchus greenii*)). As a result, all activities with a Federal nexus occurring in these areas are already subject to section 7 consultation requirements regardless of a critical habitat designation for the Canoe Creek clubshell. Based on historical consultation rates for co-occurring species, we anticipate approximately five or fewer section 7 consultation actions in the proposed critical habitat areas for the Canoe Creek clubshell.

In addition, any actions that may affect the Canoe Creek clubshell or its habitat in these areas would also affect designated critical habitat, and it is unlikely that any additional conservation efforts would be recommended to address the adverse modification standard over and above those recommended as necessary to avoid jeopardizing the continued existence of the species. Therefore, when section 7 consultations occur, the only costs expected are those associated with the additional administrative effort needed to consider adverse modification during the consultation process. While this additional analysis would require time and resources by both the Federal action agency and the Service, we believe that in most circumstances, these costs would be predominantly administrative in nature and would not be significant.

Further, we do not expect the designation of critical habitat for the Canoe Creek clubshell to trigger additional requirements under State or local regulations or have perceptional effects on markets. We also do not predict the designation would result in additional section 7 efforts needed to conserve the species. Thus, the annual administrative burden is unlikely to reach $100 million.

In conclusion, based on our estimate of the number of consultations and their costs, which would likely be limited to those associated with administrative efforts, we estimate that the annual costs to the Service and Action agencies from designating critical habitat for the Canoe Creek clubshell would be approximately $15,200. Therefore, the designation is unlikely to meet the threshold of $100 million in a single year for an economically significant rule, with regard to costs, under E.O. 12866.

We are soliciting data and comments from the public on the DEA discussed above, as well as all aspects of this proposed rule and our required determinations. During the development of a final designation, we will consider the information presented in the DEA and any additional address information on economic impacts we receive during the public comment period to determine whether any specific areas should be excluded from the final critical habitat designation under authority of section 4(b)(2) and our implementing regulations at 50 CFR 424.19. In particular, we may exclude an area from critical habitat if we determine that the benefits of excluding the area outweigh the benefits of including the area, provided the exclusion will not result in the extinction of this species.

Consideration of National Security Impacts

Section 4(a)(3)(B)(i) of the Act may not cover all DoD lands or areas that pose potential national-security concerns (*e.g.,* a DoD installation that is in the process of revising its INRMP for a newly listed species or a species previously not covered). If a particular area is not covered under section 4(a)(3)(B)(i), national-security or homeland-security concerns are not a factor in the process of determining what areas meet the definition of ''critical habitat.'' Nevertheless, when designating critical habitat under section 4(b)(2), the Service must consider impacts on national security, including homeland security, on lands or areas not covered by section 4(a)(3)(B)(i). Accordingly, we will always consider for exclusion from the designation areas for which DoD, Department of Homeland Security (DHS), or another Federal agency has requested exclusion based on an assertion of national-security or homeland-security concerns.

We cannot, however, automatically exclude requested areas. When DoD, DHS, or another Federal agency requests exclusion from critical habitat on the basis of national-security or homeland-security impacts, it must provide a reasonably specific justification of an incremental impact on national security that would result from the designation of that specific area as critical habitat. That justification could include demonstration of probable impacts, such as impacts to ongoing border-security patrols and surveillance activities, or a delay in training or facility construction, as a result of compliance with section 7(a)(2) of the

Act. If the agency requesting the exclusion does not provide us with a reasonably specific justification, we will contact the agency to recommend that it provide a specific justification or clarification of its concerns relative to the probable incremental impact that could result from the designation. If the agency provides a reasonably specific justification, we will defer to the expert judgment of DoD, DHS, or another Federal agency as to: (1) Whether activities on its lands or waters, or its activities on other lands or waters, have national-security or homeland-security implications; (2) the importance of those implications; and (3) the degree to which the cited implications would be adversely affected in the absence of an exclusion. In that circumstance, in conducting a discretionary section 4(b)(2) exclusion analysis, we will give great weight to national-security and homeland-security concerns in analyzing the benefits of exclusion.

In preparing this proposal, we have determined that the lands within the proposed designation of critical habitat for the Canoe Creek clubshell are not owned, managed, or used by the DoD or DHS, and, therefore, we anticipate no impact on national security or homeland security. However, during the development of a final designation we will consider any additional information we receive through the public comment period on the impacts of the proposed designation on national security or homeland security to determine whether any specific areas should be excluded from the final critical habitat designation under authority of section 4(b)(2) and our implementing regulations at 50 CFR 424.19.

Consideration of Other Relevant Impacts

Under section 4(b)(2) of the Act, we consider any other relevant impacts, in addition to economic impacts and impacts on national security discussed above. We consider a number of factors, including whether there are permitted conservation plans (such as HCPs, safe harbor agreements (SHAs), or candidate conservation agreements with assurances (CCAAs)) covering the species in the area, or whether there are non-permitted conservation agreements and partnerships that would be encouraged by designation of, or exclusion from, critical habitat. In addition, we look at the existence of Tribal conservation plans and partnerships and consider the government-to-government relationship of the United States with Tribal entities. We also consider any social impacts that might occur because of the designation.

In preparing this proposal, we have determined that there are currently no HCPs or other management plans for the Canoe Creek clubshell, and the proposed designation does not include any Tribal lands or trust resources. We anticipate no impact on Tribal lands, partnerships, or HCPs from this proposed critical habitat designation.

Exclusions

We are not considering any exclusions at this time from the proposed designation under section 4(b)(2) of the Act based on economic impacts, national security impacts, or other relevant impacts, such as partnerships, management, or protection afforded by cooperative management efforts. However, during the development of a final designation, we will consider any additional information we receive through the public comment period to determine whether any specific areas should be excluded from the final critical habitat designation under authority of the Act's section 4(b)(2) and our implementing regulations at 50 CFR 424.19.

Required Determinations

Clarity of the Rule

We are required by Executive Orders 12866 and 12988 and by the Presidential Memorandum of June 1, 1998, to write all rules in plain language. This means that each rule we publish must:

(1) Be logically organized;

(2) Use the active voice to address readers directly;

(3) Use clear language rather than jargon;

(4) Be divided into short sections and sentences; and

(5) Use lists and tables wherever possible.

If you feel that we have not met these requirements, send us comments by one of the methods listed in **ADDRESSES**. To better help us revise the rule, your comments should be as specific as possible. For example, you should tell us the numbers of the sections or paragraphs that are unclearly written, which sections or sentences are too long, the sections where you feel lists or tables would be useful, etc.

Regulatory Planning and Review (Executive Orders 12866 and 13563)

Executive Order 12866 provides that the Office of Information and Regulatory Affairs (OIRA) in the Office of Management and Budget will review all significant rules. OIRA has waived their review regarding their significance determination of this proposed rule.

Executive Order 13563 reaffirms the principles of E.O. 12866 while calling for improvements in the nation's regulatory system to promote predictability, to reduce uncertainty, and to use the best, most innovative, and least burdensome tools for achieving regulatory ends. The executive order directs agencies to consider regulatory approaches that reduce burdens and maintain flexibility and freedom of choice for the public where these approaches are relevant, feasible, and consistent with regulatory objectives. E.O. 13563 emphasizes further that regulations must be based on the best available science and that the rulemaking process must allow for public participation and an open exchange of ideas. We have developed this proposed rule in a manner consistent with these requirements.

Regulatory Flexibility Act (5 U.S.C. 601 et seq.)

Under the Regulatory Flexibility Act (RFA; 5 U.S.C. 601 *et seq.*), as amended by the Small Business Regulatory Enforcement Fairness Act of 1996 (SBREFA; 5 U.S.C. 801 *et seq.*), whenever an agency is required to publish a notice of rulemaking for any proposed or final rule, it must prepare and make available for public comment a regulatory flexibility analysis that describes the effects of the rule on small entities (*i.e.,* small businesses, small organizations, and small government jurisdictions). However, no regulatory flexibility analysis is required if the head of the agency certifies the rule will not have a significant economic impact on a substantial number of small entities. The SBREFA amended the RFA to require Federal agencies to provide a certification statement of the factual basis for certifying that the rule will not have a significant economic impact on a substantial number of small entities.

According to the Small Business Administration, small entities include small organizations such as independent nonprofit organizations; small governmental jurisdictions, including school boards and city and town governments that serve fewer than 50,000 residents; and small businesses (13 CFR 121.201). Small businesses include manufacturing and mining concerns with fewer than 500 employees, wholesale trade entities with fewer than 100 employees, retail and service businesses with less than $5 million in annual sales, general and heavy construction businesses with less than $27.5 million in annual business, special trade contractors doing less than

$11.5 million in annual business, and agricultural businesses with annual sales less than $750,000. To determine if potential economic impacts to these small entities are significant, we considered the types of activities that might trigger regulatory impacts under this designation as well as types of project modifications that may result. In general, the term ''significant economic impact'' is meant to apply to a typical small business firm's business operations.

Under the RFA, as amended, and as understood in light of recent court decisions, Federal agencies are required to evaluate the potential incremental impacts of rulemaking on those entities directly regulated by the rulemaking itself; in other words, the RFA does not require agencies to evaluate the potential impacts to indirectly regulated entities. The regulatory mechanism through which critical habitat protections are realized is section 7 of the Act, which requires Federal agencies, in consultation with the Service, to ensure that any action authorized, funded, or carried out by the agency is not likely to destroy or adversely modify critical habitat. Therefore, under section 7, only Federal action agencies are directly subject to the specific regulatory requirement (avoiding destruction and adverse modification) imposed by critical habitat designation. Consequently, it is our position that only Federal action agencies would be directly regulated if we adopt the proposed critical habitat designation. There is no requirement under the RFA to evaluate the potential impacts to entities not directly regulated. Moreover, Federal agencies are not small entities. Therefore, because no small entities would be directly regulated by this rulemaking, the Service certifies that, if made final as proposed, the proposed critical habitat designation will not have a significant economic impact on a substantial number of small entities.

In summary, we have considered whether the proposed designation would result in a significant economic impact on a substantial number of small entities. For the above reasons and based on currently available information, we certify that, if made final, the proposed critical habitat designation will not have a significant economic impact on a substantial number of small business entities. Therefore, an initial regulatory flexibility analysis is not required.

Executive Order 13771

We do not believe this proposed rule is an E.O. 13771 (''Reducing Regulation and Controlling Regulatory Costs'') (82 FR 9339, February 3, 2017) regulatory action because we believe this rule is not significant under E.O. 12866; however, the Office of Information and Regulatory Affairs has waived their review regarding their E.O. 12866 significance determination of this proposed rule.

Energy Supply, Distribution, or Use—Executive Order 13211

Executive Order 13211 (Actions Concerning Regulations That Significantly Affect Energy Supply, Distribution, or Use) requires agencies to prepare Statements of Energy Effects when undertaking certain actions. In our economic analysis, we did not find that this proposed critical habitat designation would significantly affect energy supplies, distribution, or use because no activities related to energy supply, distribution, or use are occurring within or adjacent to the proposed critical habitat designation. Therefore, this action is not a significant energy action, and no Statement of Energy Effects is required.

Unfunded Mandates Reform Act (2 U.S.C. 1501 et seq.)

In accordance with the Unfunded Mandates Reform Act (2 U.S.C. 1501 *et seq.*), we make the following finding:

(1) This proposed rule would not produce a Federal mandate. In general, a Federal mandate is a provision in legislation, statute, or regulation that would impose an enforceable duty upon State, local, or Tribal governments, or the private sector, and includes both ''Federal intergovernmental mandates'' and ''Federal private sector mandates.'' These terms are defined in 2 U.S.C. 658(5)–(7). ''Federal intergovernmental mandate'' includes a regulation that ''would impose an enforceable duty upon State, local, or Tribal governments'' with two exceptions. It excludes ''a condition of Federal assistance.'' It also excludes ''a duty arising from participation in a voluntary Federal program,'' unless the regulation ''relates to a then-existing Federal program under which $500,000,000 or more is provided annually to State, local, and Tribal governments under entitlement authority,'' if the provision would ''increase the stringency of conditions of assistance'' or ''place caps upon, or otherwise decrease, the Federal Government's responsibility to provide funding,'' and the State, local, or Tribal governments ''lack authority'' to adjust accordingly. At the time of enactment, these entitlement programs were: Medicaid; Aid to Families with Dependent Children work programs; Child Nutrition; Food Stamps; Social Services Block Grants; Vocational Rehabilitation State Grants; Foster Care, Adoption Assistance, and Independent Living; Family Support Welfare Services; and Child Support Enforcement. ''Federal private sector mandate'' includes a regulation that ''would impose an enforceable duty upon the private sector, except (i) a condition of Federal assistance or (ii) a duty arising from participation in a voluntary Federal program.''

The designation of critical habitat does not impose a legally binding duty on non-Federal Government entities or private parties. Under the Act, the only regulatory effect is that Federal agencies must ensure that their actions do not destroy or adversely modify critical habitat under section 7. While non-Federal entities that receive Federal funding, assistance, or permits, or that otherwise require approval or authorization from a Federal agency for an action, may be indirectly impacted by the designation of critical habitat, the legally binding duty to avoid destruction or adverse modification of critical habitat rests squarely on the Federal agency. Furthermore, to the extent that non-Federal entities are indirectly impacted because they receive Federal assistance or participate in a voluntary Federal aid program, the Unfunded Mandates Reform Act would not apply, nor would critical habitat shift the costs of the large entitlement programs listed above onto State governments.

(2) We do not believe that this rule would significantly or uniquely affect small governments because the units do not occur within the jurisdiction of small governments. Therefore, a Small Government Agency Plan is not required.

Takings—Executive Order 12630

In accordance with E.O. 12630 (Government Actions and Interference with Constitutionally Protected Private Property Rights), we have analyzed the potential takings implications of designating critical habitat for the Canoe Creek clubshell in a takings implications assessment. The Act does not authorize the Service to regulate private actions on private lands or confiscate private property as a result of critical habitat designation. Designation of critical habitat does not affect land ownership, or establish any closures, or restrictions on use of or access to the designated areas. Furthermore, the designation of critical habitat does not affect landowner actions that do not require Federal funding or permits, nor does it preclude development of habitat

conservation programs or issuance of incidental take permits to permit actions that do require Federal funding or permits to go forward. However, Federal agencies are prohibited from carrying out, funding, or authorizing actions that would destroy or adversely modify critical habitat. A takings implications assessment has been completed for the proposed designation of critical habitat for the Canoe Creek clubshell, and it concludes that, if adopted, this designation of critical habitat does not pose significant takings implications for lands within or affected by the designation.

Federalism—Executive Order 13132

In accordance with E.O. 13132 (Federalism), this proposed rule does not have significant Federalism effects. A federalism summary impact statement is not required. In keeping with Department of the Interior and Department of Commerce policy, we requested information from, and coordinated development of this proposed critical habitat designation with, appropriate State resource agencies. From a federalism perspective, the designation of critical habitat directly affects only the responsibilities of Federal agencies. The Act imposes no other duties with respect to critical habitat, either for States and local governments, or for anyone else. As a result, the proposed rule does not have substantial direct effects either on the States, or on the relationship between the national government and the States, or on the distribution of powers and responsibilities among the various levels of government. The proposed designation may have some benefit to these governments because the areas that contain the features essential to the conservation of the species are more clearly defined, and the physical or biological features of the habitat necessary for the conservation of the species are specifically identified. This information does not alter where and what federally sponsored activities may occur. However, it may assist State and local governments in long-range planning because they no longer have to wait for case-by-case section 7 consultations to occur.

Where State and local governments require approval or authorization from a Federal agency for actions that may affect critical habitat, consultation under section 7(a)(2) of the Act would be required. While non-Federal entities that receive Federal funding, assistance, or permits, or that otherwise require approval or authorization from a Federal agency for an action, may be indirectly impacted by the designation of critical habitat, the legally binding duty to avoid destruction or adverse modification of critical habitat rests squarely on the Federal agency.

Civil Justice Reform—Executive Order 12988

In accordance with Executive Order 12988 (Civil Justice Reform), the Office of the Solicitor has determined that the rule would not unduly burden the judicial system and that it meets the requirements of sections 3(a) and 3(b)(2) of the Order. We have proposed designating critical habitat in accordance with the provisions of the Act. To assist the public in understanding the habitat needs of the species, this proposed rule identifies the elements of physical or biological features essential to the conservation of the species. The proposed areas of designated critical habitat are presented on maps, and the proposed rule provides several options for the interested public to obtain more detailed location information, if desired.

Paperwork Reduction Act of 1995 (44 U.S.C. 3501 et seq.)

This rule does not contain information collection requirements, and a submission to the Office of Management and Budget (OMB) under the Paperwork Reduction Act of 1995 (44 U.S.C. 3501 *et seq.*) is not required. We may not conduct or sponsor and you are not required to respond to a collection of information unless it displays a currently valid OMB control number.

National Environmental Policy Act (42 U.S.C. 4321 et seq.)

It is our position that, outside the jurisdiction of the U.S. Court of Appeals for the Tenth Circuit, we do not need to prepare environmental analyses pursuant to the National Environmental Policy Act (NEPA; 42 U.S.C. 4321 *et seq.*) in connection with designating critical habitat under the Act. We published a notice outlining our reasons for this determination in the **Federal Register** on October 25, 1983 (48 FR 49244). This position was upheld by the U.S. Court of Appeals for the Ninth Circuit (*Douglas County* v. *Babbitt,* 48 F.3d 1495 (9th Cir. 1995), *cert. denied,* 516 U.S. 1042 (1996)).

Government-to-Government Relationship With Tribes

In accordance with the President's memorandum of April 29, 1994 (Government-to-Government Relations with Native American Tribal Governments; 59 FR 22951), Executive Order 13175 (Consultation and Coordination with Indian Tribal Governments), and the Department of the Interior's manual at 512 DM 2, we readily acknowledge our responsibility to communicate meaningfully with recognized Federal Tribes on a government-to-government basis. In accordance with Secretarial Order 3206 of June 5, 1997 (American Indian Tribal Rights, Federal-Tribal Trust Responsibilities, and the Endangered Species Act), we readily acknowledge our responsibilities to work directly with Tribes in developing programs for healthy ecosystems, to acknowledge that Tribal lands are not subject to the same controls as Federal public lands, to remain sensitive to Indian culture, and to make information available to Tribes. We have determined that no Tribal lands fall within the boundaries of the proposed critical habitat for the Canoe Creek clubshell, so no Tribal lands would be affected by the proposed designation.

References Cited

A complete list of references cited in this rulemaking is available on the internet at *http://www.regulations.gov* and upon request from the Alabama Ecological Services Field Office (see **FOR FURTHER INFORMATION CONTACT**).

Authors

The primary authors of this proposed rule are the staff members of the Fish and Wildlife Service's Species Assessment Team and the Alabama Ecological Services Field Office.

Signing Authority

The Director, U.S. Fish and Wildlife Service, approved this document and authorized the undersigned to sign and submit the document to the Office of the Federal Register for publication electronically as an official document of the U.S. Fish and Wildlife Service. Aurelia Skipwith, Director, U.S. Fish and Wildlife Service, approved this document on September 30, 2020, for publication.

Dated: September 30, 2020.

Madonna Baucum,

Regulations and Policy Chief, Division of Policy, Economics, Risk Management, and Analytics, Joint Administrative Operations, U.S. Fish and Wildlife Service.

List of Subjects in 50 CFR Part 17

Endangered and threatened species, Exports, Imports, Reporting and recordkeeping requirements, Transportation.

Proposed Regulation Promulgation

Accordingly, we propose to amend part 17, subchapter B of chapter I, title

50 of the Code of Federal Regulations, as set forth below:

PART 17—ENDANGERED AND THREATENED WILDLIFE AND PLANTS

■ 1. The authority citation for part 17 continues to read as follows:

Authority: 16 U.S.C. 1361–1407; 1531–1544; and 4201–4245, unless otherwise noted.

■ 2. In § 17.11 amend the table in paragraph (h) by adding an entry for ''Clubshell, Canoe Creek'' to the List of Endangered and Threatened Wildlife in alphabetical order under CLAMS to read as set forth below:

§ 17.11 Endangered and threatened wildlife.

* * * * *

(h) * * *

Common name	Scientific name	Where listed	Status	Listing citations and applicable rules
*	*	*	*	*
CLAMS				
*	*	*	*	*
Clubshell, Canoe Creek	*Pleurobema athearni*	Wherever found	E	[**Federal Register** citation when published as a final rule]; 50 CFR 17.95(f).[CH]
*	*	*	*	*

■ 3. Amend § 17.95(f) by adding an entry for ''Canoe Creek Clubshell (*Pleurobema athearni*)'' immediately following the entry for ''Rabbitsfoot (*Quadrula cylindrica cylindrica*)'' to read as set forth below:

§ 17.95 Critical habitat—fish and wildlife.

* * * * *

(f) *Clams and Snails.*

* * * * *

Canoe Creek Clubshell (*Pleurobema athearni*)

(1) Critical habitat units are depicted for St. Clair and Etowah Counties, Alabama, on the maps in this entry.

(2) Within these areas, the physical or biological features essential to the conservation of the Canoe Creek clubshell consist of the following components:

(i) Suitable substrates and connected instream habitats, characterized by a geomorphically stable stream channel (a channel that maintains its lateral dimensions, longitudinal profile, and spatial pattern over time without aggrading or degrading bed elevation) and connected instream habitats (such as stable riffle-run-pool habitats that provide flow refuges consisting of silt-free gravel and coarse sand substrates).

(ii) A hydrologic flow regime (*i.e.,* the magnitude, frequency, duration, and seasonality of discharge over time) necessary to maintain benthic habitats where the species is found; to maintain connectivity of streams with the floodplain; and to provide for normal behavior, growth, and survival of all life stages of Canoe Creek clubshell mussels and their fish hosts.

(iii) Water quality (including, but not limited to, temperature, conductivity, hardness, turbidity, ammonia, heavy metals, oxygen content, and other chemical characteristics) necessary to sustain natural physiological processes for normal behavior, growth, and viability of all life stages of Canoe Creek clubshell mussels and their fish hosts.

(iv) Sediment quality (including, but not limited to, coarse sand and/or gravel substrates with low to moderate amounts of fine sediment, low amounts of attached filamentous algae, and other physical and chemical characteristics) necessary for normal behavior, growth, and viability of all life stages of Canoe Creek clubshell mussels and their fish hosts.

(v) The presence and abundance of fish hosts, which may include the tricolor shiner (*Cyprinella trichroistia*), Alabama shiner (*C. callistia*), and striped shiner (*Luxilus chrysocephalus*), necessary for recruitment of the Canoe Creek clubshell mussel.

(3) Critical habitat does not include manmade structures (such as buildings, aqueducts, runways, roads, and other paved areas) and the land on which they are located existing within the legal boundaries on the effective date of the final rule.

(4) *Critical habitat map units.* Data layers defining map units were created from the National Hydrography High Resolution Dataset, and critical habit units were mapped using North American Datum (NAD) 1983 Universal Transverse Mercator (UTM) Zone 16N coordinates. The maps in this entry, as modified by any accompanying regulatory text, establish the boundaries of the critical habitat designation. The coordinates or plot points or both on which each map is based are available to the public at the Service's internet site at *https://www.fws.gov/daphne,* at *http://www.regulations.gov* at Docket No. FWS–R4–ES–2020–0078, and at the field office responsible for this designation. You may obtain field office location information by contacting one of the Service regional offices, the addresses of which are listed at 50 CFR 2.2.

(5) *Note:* Index map follows:

BILLING CODE 4333–15–P

Canoe Creek Clubshell *(Pleurobema athearni)*
Critical Habitat Index Map
St. Clair and Etowah Counties, Alabama

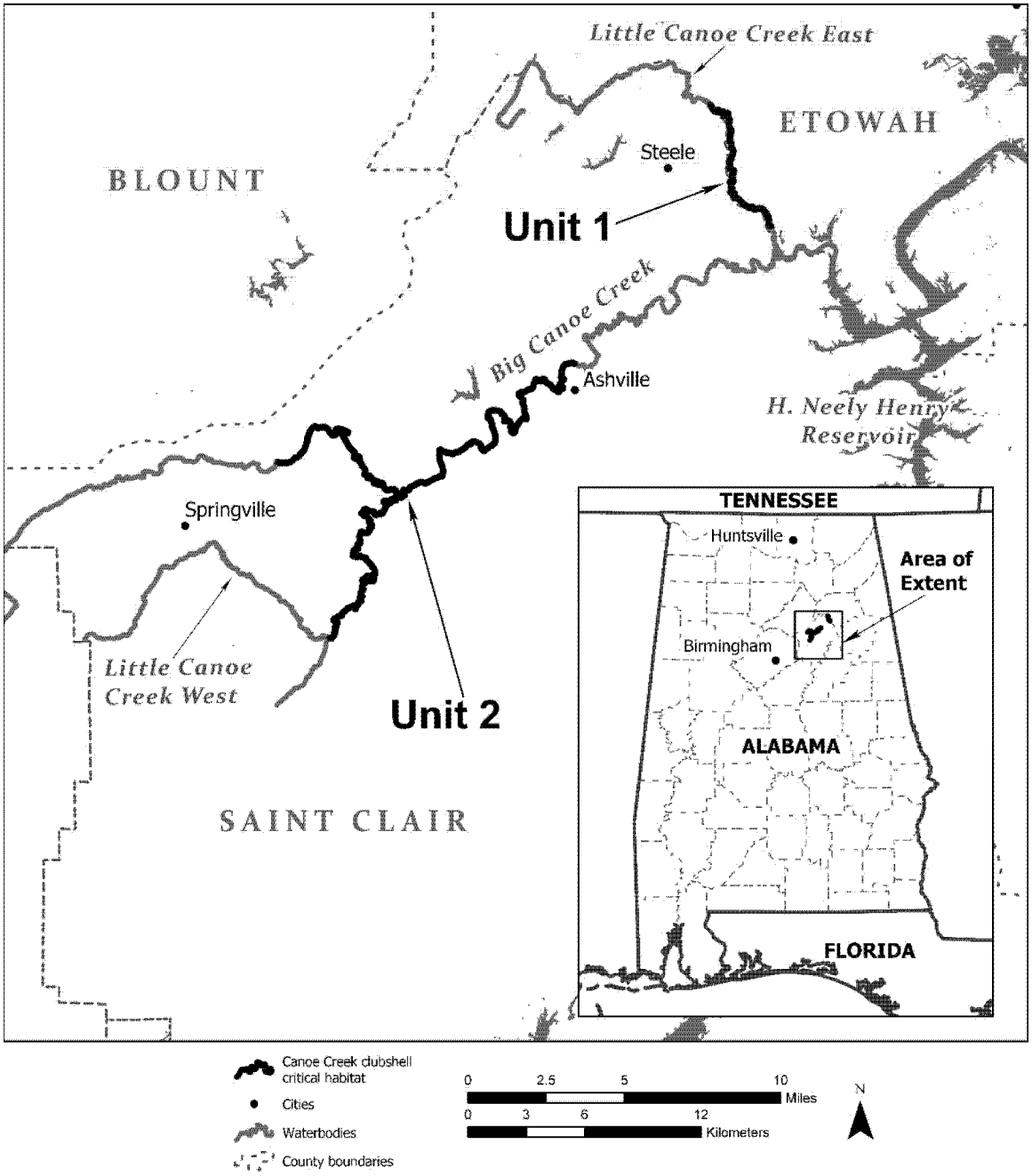

(6) Unit 1: Little Canoe Creek East, St. Clair and Etowah Counties, Alabama.

(i) *General description:* Unit 1 consists of 9.7 river km (6.0 river mi) of Little Canoe Creek East, due east of the Town of Steele, in St. Clair and Etowah Counties, Alabama. The unit consists of the Little Canoe Creek mainstem from the intersection with the Federal Energy Regulatory Commission boundary of H. Neely Henry Reservoir (at elevation 155 meters (m) (509 feet (ft)) above mean sea level and approximately 4.4 river km (2.7 river mi) upstream of its confluence with Big Canoe Creek), upstream 9.7 river km (6.0 river mi) to the U.S. Highway 11 bridge crossing. The majority of the adjacent land surrounding this unit is privately owned. A small amount of the adjacent land is publicly owned in the form of bridge crossings and easements, and portions of the eastern bank of Little Canoe Creek between U.S. Highway 11 to Interstate 59, in Etowah County, Alabama. Approximately 2.4 river km (1.5 river mi) of Little Canoe Creek borders property to the east owned by Etowah County, Alabama.

(ii) Map of Unit 1 follows:

Canoe Creek Clubshell *(Pleurobema athearni)*
Critical Habitat Unit 1: Little Canoe Creek East
St. Clair and Etowah Counties, Alabama

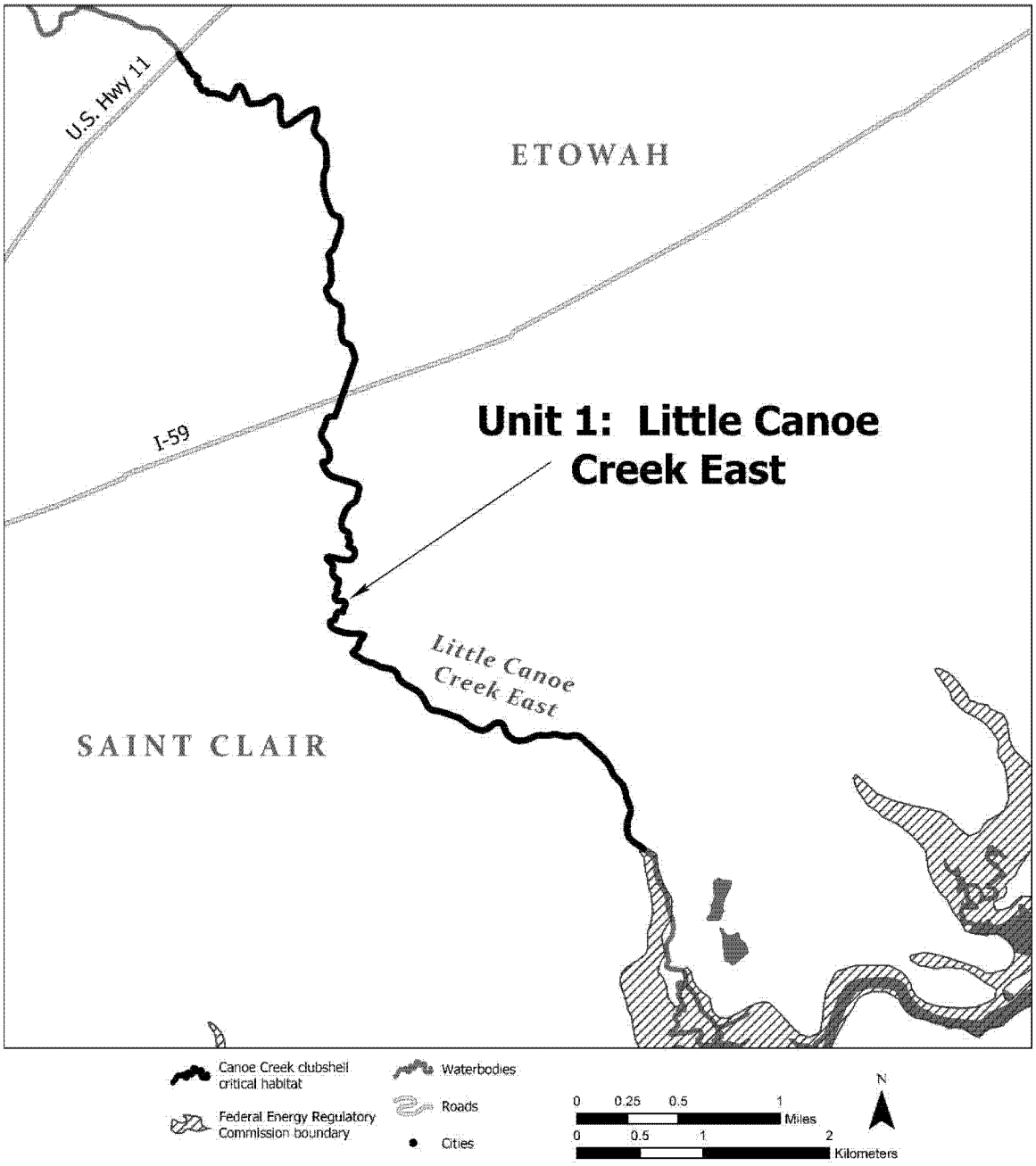

(7) Unit 2: Big Canoe Creek/Little Canoe Creek West, St. Clair County, Alabama.

(i) *General Description:* Unit 2 consists of 48.8 river km (30.3 river mi) of Big Canoe Creek and its tributary Little Canoe Creek West, which are located geographically between the cities of Springville and Ashville, St. Clair County, Alabama. The unit consists of the main channel of Big Canoe Creek from the Double Bridge Road bridge crossing near Ashville, Alabama, upstream 32.2 river km (20.0 river mi) to the Washington Valley Rd (St. Clair County Road 23) bridge crossing near Springville, Alabama; and Little Canoe Creek West from its confluence with Big Canoe Creek, upstream 16.6 river km (10.3 river mi) to the confluence of Stovall Branch. The majority of this unit is adjacent to private land, except for any small amount of adjacent land that is publicly owned in the form of bridge crossings and easements.

(ii) Map of Unit 2 follows:

Canoe Creek Clubshell *(Pleurobema athearni)*
Critical Habitat Unit 2: Big Canoe Creek/Little Canoe Creek West
St. Clair County, Alabama

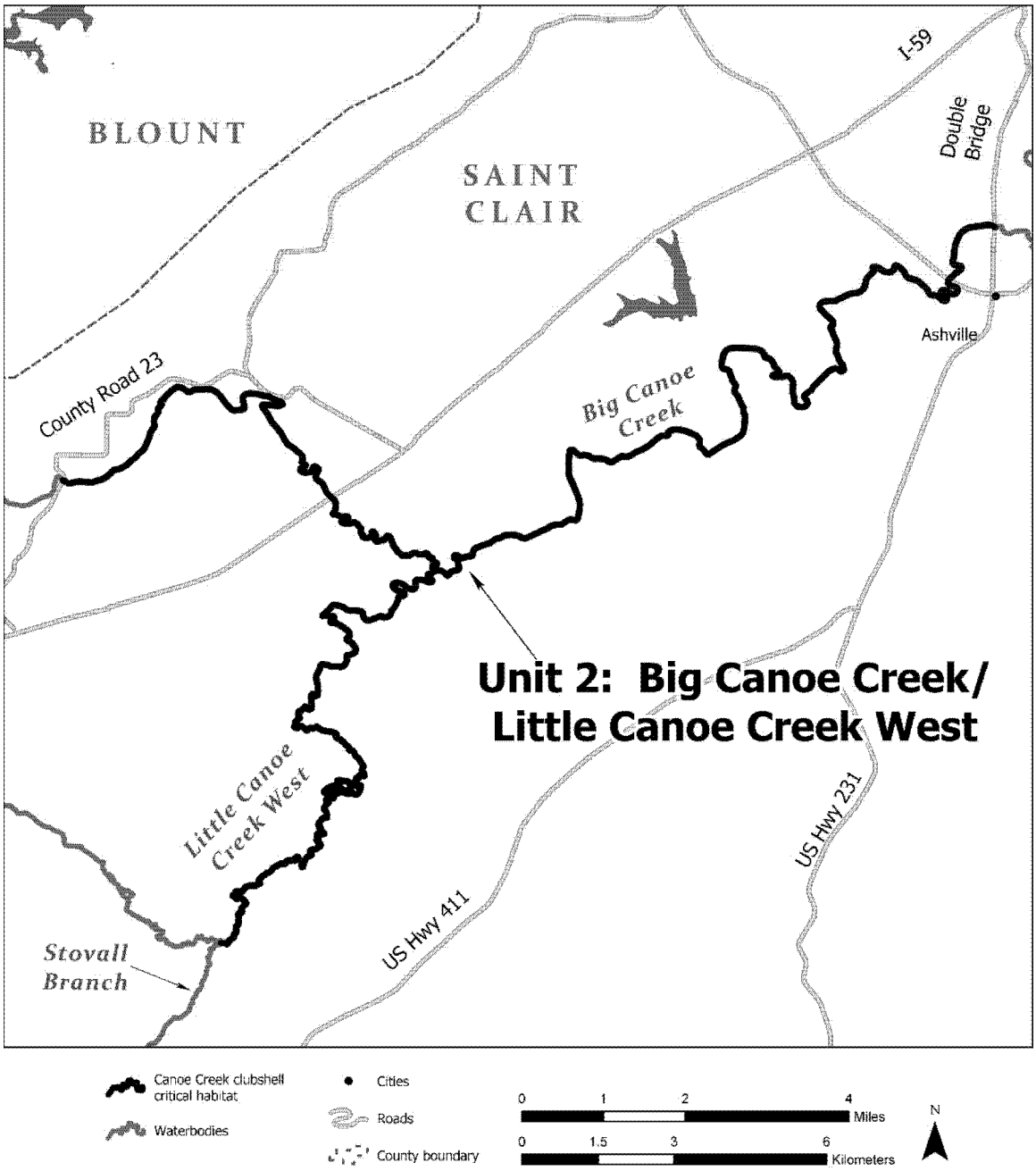

[FR Doc. 2020–22007 Filed 11–2–20; 8:45 am]
BILLING CODE 4333–15–C

Notices

Federal Register

Vol. 85, No. 213

Tuesday, November 3, 2020

This section of the FEDERAL REGISTER contains documents other than rules or proposed rules that are applicable to the public. Notices of hearings and investigations, committee meetings, agency decisions and rulings, delegations of authority, filing of petitions and applications and agency statements of organization and functions are examples of documents appearing in this section.

DEPARTMENT OF AGRICULTURE

Submission for OMB Review; Comment Request

October 29, 2020.

The Department of Agriculture has submitted the following information collection requirement(s) to OMB for review and clearance under the Paperwork Reduction Act of 1995, Public Law 104–13. Comments are requested regarding; whether the collection of information is necessary for the proper performance of the functions of the agency, including whether the information will have practical utility; the accuracy of the agency's estimate of burden including the validity of the methodology and assumptions used; ways to enhance the quality, utility and clarity of the information to be collected; and ways to minimize the burden of the collection of information on those who are to respond, including through the use of appropriate automated, electronic, mechanical, or other technological collection techniques or other forms of information technology.

Comments regarding this information collection received by December 3, 2020 will be considered. Written comments and recommendations for the proposed information collection should be submitted within 30 days of the publication of this notice on the following website *www.reginfo.gov/public/do/PRAMain.* Find this particular information collection by selecting ''Currently under 30-day Review—Open for Public Comments'' or by using the search function.

An agency may not conduct or sponsor a collection of information unless the collection of information displays a currently valid OMB control number and the agency informs potential persons who are to respond to the collection of information that such persons are not required to respond to the collection of information unless it displays a currently valid OMB control number.

Animal and Plant Health Inspection Service

Title: Bovine Spongiform Encephalopathy (BSE); Importation of Animals and Animal Products.

OMB Control Number: 0579–0393.

Summary of Collection: The Animal Health Protection Act (AHPA) of 2002 is the primary Federal law governing the protection of animal health. The law gives the Secretary of Agriculture broad authority to detect, control, or eradicate pests or diseases of livestock or poultry. The Secretary may also prohibit or restrict import or export of any animal or related material if necessary to prevent the spread of any livestock or poultry pest or disease. The AHPA is contained in Title X, Subtitle E, Sections 10401–18 of Public Law 107–171, May 13, 2002, the Farm Security and Rural Investment Act of 2002. The Animal and Plant Health Inspection Service (APHIS) regulates the importation of animals and animal products into the United States to guard against the introduction of animal diseases. The regulations in 9 CFR parts 92 through 98, govern the importation of certain animals, birds, poultry, meat, other animal products and byproducts, hay, and straw. It also contains measures for preventing the introduction of various diseases into the United States.

Need and Use of the Information: To ensure BSE is not introduced into the United States, the regulations place specific conditions on the importation of animals and animal products. These requirements necessitate the use of several information collection activities, including, but not limited to, certification, official identification, request for and retention of classification as negligible or controlled risk, declaration of importation, import and export certificates, applications, import and movement permits, agreements, certification statements, seals, notifications, and recordkeeping. Failure to collect this information would make it impossible for APHIS to effectively prevent BSE-contaminated animals and animal products from entering the United States, and to track movement of any imported BSE-contaminated animals or products within the United States post-arrival.

Description of Respondents: Business or other for-profit; Federal Government; Individuals.

Number of Respondents: 2,225.

Frequency of Responses: Reporting, Recordkeeping: On occasion.

Total Burden Hours: 292,884.

Ruth Brown,

Departmental Information Collection Clearance Officer.

[FR Doc. 2020–24317 Filed 11–2–20; 8:45 am]

BILLING CODE 3410–34–P

DEPARTMENT OF AGRICULTURE

Animal and Plant Health Inspection Service

[Docket No. APHIS–2020–0098]

Pioneer Hi-Bred International, Inc.: Availability of a Petition for the Determination of Nonregulated Status for Insect Resistant and Herbicide-Tolerant Maize

AGENCY: Animal and Plant Health Inspection Service, USDA.

ACTION: Notice.

SUMMARY: We are advising the public that the Animal and Plant Health Inspection Service (APHIS) has received a petition from Pioneer Hi-Bred International, Inc. seeking a determination of nonregulated status for DP23211 maize (corn). The corn is engineered for insect resistance against corn rootworm and contains the gene that codes for the phosphinothricin acetyltransferase protein responsible for tolerance to glufosinate-ammonium herbicides. DP23211 corn also contains the gene that encodes for the phosphomannose isomerase protein, which is used as a selectable marker. We are making the petition available for review and comment to help us identify potential issues and impacts that APHIS may determine should be considered in our evaluation of the petition.

DATES: We will consider all comments that we receive on or before January 4, 2021.

ADDRESSES: You may submit comments by either of the following methods:

- *Federal eRulemaking Portal:* Go to *http://www.regulations.gov/#!docketDetail;D=APHIS-2020-0098.*
- *Postal Mail/Commercial Delivery:* Send your comment to Docket No. APHIS–2020–0098, Regulatory Analysis

and Development, PPD, APHIS, Station 3A–03.8, 4700 River Road, Unit 118, Riverdale, MD 20737–1238.

The petition and any comments we receive on this docket may be viewed at *http://www.regulations.gov/#!docketDetail;D=APHIS-2020-0098* or in our reading room, which is located in 1620 of the USDA South Building, 14th Street and Independence Avenue SW, Washington, DC. Normal reading room hours are 8 a.m. to 4:30 p.m., Monday through Friday, except holidays. To be sure someone is there to help you, please call (202) 7997039 before coming.

The petition is also available on the APHIS website at: *https://www.aphis.usda.gov/aphis/ourfocus/biotechnology/permits-notifications-petitions/petitions/petition-status* under APHIS petition 20–203–01p.

FOR FURTHER INFORMATION CONTACT: Ms. Cindy Eck, Biotechnology Regulatory Services, APHIS, 4700 River Road, Unit 147, Riverdale, MD 20737–1236; (301) 851–3892; email: *cynthia.a.eck@usda.gov.* Secondary contact: Dr. Subray Hegde, Director, Risk Analysis Programs, Biotechnology Regulatory Services, APHIS, 4700 River Road, Unit 147, Riverdale, MD 20737–1236; (301) 851–3901; email: *subray.hegde@usda.gov.*

SUPPLEMENTARY INFORMATION: Under the authority of the plant pest provisions of the Plant Protection Act (7 U.S.C. 7701 *et seq.*), the regulations in 7 CFR part 340, ''Introduction of Organisms and Products Altered or Produced Through Genetic Engineering Which Are Plant Pests or Which There Is Reason to Believe Are Plant Pests,'' regulate, among other things, the introduction (importation, interstate movement, or release into the environment) of organisms and products altered or produced through genetic engineering that are plant pests or that there is reason to believe are plant pests. Such organisms and products developed using genetic engineering are considered ''regulated articles.''

Pursuant to the terms set forth in a final rule published in the **Federal Register** on May 18, 2020 (85 FR 29790–29838, Docket No. APHIS–2018–0034),[1] any person may submit a petition to the Animal and Plant Health Inspection Service (APHIS) seeking a determination that an article should not be regulated under 7 CFR part 340.

APHIS has received a petition (APHIS Petition Number 20–203–01p) from Pioneer Hi-Bred International, Inc. (Pioneer) seeking a determination of nonregulated status of maize (corn) designated as DP23211, which has been genetically engineered for insect resistance against corn rootworm that consists of a double-stranded RNA combined with a novel protein. DP23211 corn also contains the gene that codes for the phosphinothricin acetyltransferase (PAT) protein responsible for the tolerance to glufosinate-ammonium herbicides and the gene that encodes for phosphomannose isomerase (PMI) protein, which is used as a selectable marker. We are making the Pioneer petition available for public comment and requesting public input regarding potential issues and impacts that APHIS should be considering in our evaluation of the petition. The Pioneer petition states that information collected during field trials and laboratory analyses indicates that DP23211 corn is not likely to be a plant pest and therefore should not be a regulated article under APHIS' regulations in 7 CFR part 340.

As described in the petition, DP23211 corn was genetically engineered to produce DvSSJ1 double-stranded ribonucleic acid (dsRNA) and the IPD072Aa protein for control of corn rootworm pests, the PAT protein for tolerance to glufosinate-ammonium herbicides, and the PMI protein used as a selectable marker. Agronomic performance assessments for DP23211 corn were conducted in replicated field studies at a total of 12 locations in the United States and Canada. The Pioneer petition states that agronomic performance of DP23211 corn is comparable to the non-genetically modified conventional counterpart and reference varieties and that these data support the conclusion that DP23211 corn lacks weediness potential and plant pest risk.

Field tests conducted under APHIS oversight allowed for evaluation of DP23211 corn in a natural agricultural setting while imposing measures to minimize the likelihood of persistence in the environment after completion of the tests. Data are gathered on multiple parameters and used by the applicant to evaluate agronomic characteristics and product performance. These and other data are used by APHIS to determine if the new variety poses a plant pest risk.

On March 6, 2012, we published in the **Federal Register** (77 FR 13258–13260, Docket No. APHIS–2011–0129) a notice[2] describing our process for soliciting public comment when considering petitions for determinations of nonregulated status for organisms developed using genetic engineering. In that notice we indicated that APHIS would accept written comments regarding a petition for 60 days once APHIS deemed it complete.

In accordance with our process for soliciting public input when considering petitions for determinations of nonregulated status, we are publishing this notice to inform the public that APHIS will accept written comments regarding the petition for a determination of nonregulated status from interested or affected persons for a period of 60 days from the date of this notice. The petition is available for public review and comment, and copies are available as indicated under **ADDRESSES** and **FOR FURTHER INFORMATION CONTACT** above. We are interested in receiving comments regarding potential environmental and interrelated economic issues and impacts that APHIS may determine should be considered in our evaluation of the petition. We are particularly interested in receiving comments regarding biological, cultural, or ecological issues, and we encourage the submission of scientific data, studies, or research to support your comments.

After the comment period closes, APHIS will review all written comments received during the comment period and any other relevant information. Any substantive issues identified by APHIS based on our review of the petition and our evaluation and analysis of comments will be considered in the development of our decision-making documents. As part of our decision-making process regarding an organism's regulatory status, APHIS prepares a plant pest risk assessment to assess its plant pest risk and the appropriate environmental documentation—either an environmental assessment (EA) or an environmental impact statement (EIS)—in accordance with the National Environmental Policy Act (NEPA), to provide the Agency with a review and analysis of any potential environmental impacts associated with the petition request. For petitions for which APHIS prepares an EA, APHIS will follow our published process for soliciting public comment (see footnote 2) and publish a separate notice in the **Federal Register** announcing the availability of APHIS' EA and plant pest risk assessment. Should APHIS determine that an EIS is necessary, APHIS will complete the NEPA EIS process in accordance with Council on Environmental Quality regulations (40 CFR part 1500–1508) and APHIS' NEPA implementing regulations (7 CFR part 372).

[1] To view the final rule, go to *http://www.regulations.gov/#!docketDetail;D=APHIS-2018-0034.*

[2] To view the notice, go to *http://www.regulations.gov/#!docketDetail;D=APHIS-2011-0129.*

Authority: 7 U.S.C. 7701–7772 and 7781–7786; 31 U.S.C. 9701; 7 CFR 2.22, 2.80, and 371.3.

Done in Washington, DC, this 28th day of October 2020.

Michael Watson,

Acting Administrator, Animal and Plant Health Inspection Service.

[FR Doc. 2020–24267 Filed 11–2–20; 8:45 am]

BILLING CODE 3410–34–P

COMMISSION ON CIVIL RIGHTS

Notice of Public Meeting of the South Carolina Advisory Committee

AGENCY: U.S. Commission on Civil Rights.

ACTION: Notice of meeting.

SUMMARY: Notice is hereby given, pursuant to the provisions of the rules and regulations of the U.S. Commission on Civil Rights (Commission) and the Federal Advisory Committee Act that the South Carolina Advisory Committee (Committee) will hold a meeting via web-conference on Wednesday, November 18, 2020, at 12:30 p.m. (EST) for the purpose of hearing testimony on subminimum wages for people with disabilities.

DATES: The meeting will be held on Wednesday, November 18, 2020 at 12:30 p.m. (EST).

ADDRESSES: *Public Call Information:* Dial: 800–353–6461, conference ID: 6388666.

FOR FURTHER INFORMATION CONTACT: Barbara Delaviez at *bdelaviez@usccr.gov* or (202) 539–8246.

SUPPLEMENTARY INFORMATION: Members of the public can listen to the discussion. This meeting is available to the public through the following toll-free call-in number. An open comment period will be provided to allow members of the public to make a statement as time allows. The conference operator will ask callers to identify themselves, the organizations they are affiliated with (if any), and an email address prior to placing callers into the conference call. Callers can expect to incur charges for calls they initiate over wireless lines, and the Commission will not refund any incurred charges. Callers will incur no charge for calls they initiate over land-line connections to the toll-free telephone number. Persons with hearing impairments may also follow the proceedings by first calling the Federal Relay Service at 1–800–977–8339 and providing the Service with the conference call number and conference ID number.

Members of the public are also entitled to submit written comments; the comments must be received in the regional office within 30 days following the meeting. Written comments may be emailed to Carolyn Allen at *callen@usccr.gov* in the Regional Program Unit Office/Advisory Committee Management Unit. Persons who desire additional information may contact the Regional Program Unit Office at (202) 539–8246.

Records generated from this meeting may be inspected and reproduced at the Regional Program Unit, as they become available, both before and after the meeting. Records of the meeting will be available via *https://www.facadatabase.gov/FACA/FACAPublicViewCommitteeDetails?id=a10t0000001gzmPAAQ* under the Commission on Civil Rights, South Carolina Advisory Committee link. Persons interested in the work of this Committee are directed to the Commission's website, *http://www.usccr.gov,* or may contact the Regional Program Unit at the above email or phone number.

Agenda

1. Web Conference on Subminimum Wages for People with Disabilities
2. Next Steps
3. Open Comment
4. Adjourn

Dated: October 29, 2020.

David Mussatt,

Supervisory Chief, Regional Programs Unit.

[FR Doc. 2020–24343 Filed 11–2–20; 8:45 am]

BILLING CODE P

DEPARTMENT OF COMMERCE

U.S. Census Bureau

Agency Information Collection Activities; Submission to the Office of Management and Budget (OMB) for Review and Approval; Comment Request; Annual Survey of School System Finances

The Department of Commerce will submit the following information collection request to the Office of Management and Budget (OMB) for review and clearance in accordance with the Paperwork Reduction Act of 1995, on or after the date of publication of this notice. We invite the general public and other Federal agencies to comment on proposed, and continuing information collections, which helps us assess the impact of our information collection requirements and minimize the public's reporting burden. Public comments were previously requested via the **Federal Register** on August 25, 2020 during a 60-day comment period. This notice allows for an additional 30 days for public comments.

Agency: U.S. Census Bureau.

Title: Annual Survey of School System Finances.

OMB Control Number: 0607–0700.

Form Number(s): F–33, F–33(L1), F–33(L2), F–33(L3).

Type of Request: Regular submission, Request for a Revision of a Currently Approved Collection.

Number of Respondents: 3.681.

Average Hours per Response: 1.12 hours.

Burden Hours: 4,130.

Needs and Uses: The U.S. Census Bureau, on behalf of the U.S. Department of Education's National Center for Education Statistics (NCES), requests an extension with revisions of approval for the Annual Survey of School System Finances. The Census Bureau's collection of school district finance data and associated publications are the most comprehensive sources for pre-kindergarten through grade 12 finance data.

These data are collected from the universe of school districts using uniform definitions and concepts of revenue, expenditure, debt, and assets as defined by Financial Accounting for Local and State School Systems: 2014 Edition. This survey and the Annual Surveys of State and Local Government Finances (OMB No. 0607–0585) are conducted as part of the Census Bureau's State and Local Government Finance program. Data collected from cities, counties, states, and special district governments are combined with data collected from local school systems to produce state and national totals of government spending. Local school system spending comprises a significant portion of total government spending. In 2018, public elementary-secondary expenditures accounted for 40 percent of local government spending.

This comprehensive and ongoing time series collection of local education agency finances maintains historical continuity in the state and local government statistics community. Elementary-secondary education related spending is the single largest financial activity of state and local governments. Education finance statistics provided by the Census Bureau allow for analyses of how public elementary-secondary school systems receive and spend funds. Increased focus on education has led to a demand for data reflecting student performance, graduation rates, and school finance policy—all of which are related to the collection of this local education finance data. State

legislatures, local leaders, university researchers, and parents increasingly rely on data to make substantive decisions about education. School district finance is a vital sector of the education data spectrum used by stakeholders to form policy and to develop new education strategies.

The revisions, which will be incorporated in the FY20 collection scheduled for mailing in January 2021, will include the following: Expanding the federal revenue section to reflect recent changes in legislation, the demand for information on other federal grants and renaming existing federal revenue data items to better match the federal grants that each are tied to. We will be adding new data items for special education expenditures in response to increasing demand by policymakers, researchers, and the general public for more detailed special education statistics.

We also plan to add new data items in response to the COVID–19 pandemic and the Coronavirus Aid, Relief, and Economic Security (CARES) Act. The CARES Act provides $30.75 billion to public PK–12 and higher education school systems through a number of learning, including technological improvements, in connection with school closings to enable compliance with COVID–19 precautions. In some cases, the funding public school systems receive from the Coronavirus Relief Fund can potentially be substantially higher than the education-specific funding school systems receive from the Education Stabilization Fund. Revenues would be separately itemized and reported at the local education agency (LEA) level under the CARES Act funds and all expenditures must be paid from CARES Act revenues. In addition, the CARES Act Coronavirus Relief Fund is funded at $150 billion for FY2020. The Coronavirus Relief Fund Guidance for State, Territorial, Local, and Tribal Governments provides that nonexclusive examples of eligible expenditures include ''Expenses to facilitate distance learning, including technological improvements, in connection with school closings to enable compliance with COVID–19 precautions.''

The education finance data collected and processed by the Census Bureau are an essential component of the agency's state and local government finance collection and provide unique products for users of education finance data.

The Bureau of Economic Analysis (BEA) uses data from the survey to develop figures for the Gross Domestic Product (GDP). F–33 data items specifically contribute to the estimates for National Income and Product Accounts (NIPA), Input-Output accounts (I–O), and gross domestic investments. BEA also uses the data to assess other public fiscal spending trends and events.

The Census Bureau's Government Finances program has disseminated comprehensive and comparable public fiscal data since 1902. School finance data, which comprised 40 percent of all local government spending in 2018, are currently incorporated into the local government statistics reported on the Annual Surveys of State and Local Government Finances. The report contains benchmark statistics on public revenue, expenditure, debt, and assets. They are widely used by economists, legislators, social and political scientists, and government administrators.

The Census Bureau makes available detailed files for all school systems from its internet website, *https://www.census.gov/programs-surveys/school-finances.html.* This website currently contains data files and statistical tables for the 1992 through 2018 fiscal year surveys. Historical files and publications prior to 1992 are also available upon request for data users engaged in longitudinal studies. In addition to numerous academic researchers who use F–33 products, staff receive inquiries from state government officials, legislatures, public policy analysts, local school officials, non-profit organizations, and various Federal agencies.

The NCES use these annual data as part of the Common Core of Data (CCD) program. The education finance data collected by the Census Bureau are the sole source of school district fiscal information for the CCD. NCES data users utilize electronic tools to search CCD databases for detailed fiscal and non-fiscal variables. Additionally, NCES uses F–33 education finance files to publish annual reports on the fiscal state of education.

Affected Public: State, Local, or Tribal government.

Frequency: Annually.

Respondent's Obligation: Voluntary.

Legal Authority: Title 13 U.S.C., Sections 8(b), 161 and 182; Title 20 U.S.C., Sections 9543–44.

This information collection request may be viewed at *www.reginfo.gov.* Follow the instructions to view the Department of Commerce collections currently under review by OMB.

Written comments and recommendations for the proposed information collection should be submitted within 30 days of the publication of this notice on the following website *www.reginfo.gov/public/do/PRAMain.* Find this particular information collection by selecting ''Currently under 30-day Review—Open for Public Comments'' or by using the search function and entering either the title of the collection or the OMB Control Number 0607–0700.

Sheleen Dumas,

Department PRA Clearance Officer, Office of the Chief Information Officer, Commerce Department.

[FR Doc. 2020–24271 Filed 11–2–20; 8:45 am]

BILLING CODE 3510–07–P

DEPARTMENT OF COMMERCE

Office of the Secretary

Membership of the Performance Review Board for the Office of the Secretary

AGENCY: Office of the Secretary, Department of Commerce.

ACTION: Notice of Membership on the Office of the Secretary Performance Review Board.

SUMMARY: The Office of the Secretary, the Department of Commerce (DOC), announces the appointment of those individuals who have been selected to serve as members of the Performance Review Board. The Performance Review Board is responsible for reviewing performance appraisals and ratings of Senior Executive Service (SES) members and Senior Level (SL) members and making recommendations to the appointing authority on other performance management issues, such as pay adjustments, bonuses and Presidential Rank Awards. The appointment of these members to the Performance Review Board will be for a period of twenty-four (24) months.

DATES: The period of appointment for those individuals selected for the Office of the Secretary Performance Review Board begins on November 3, 2020.

FOR FURTHER INFORMATION CONTACT: Joan Nagielski, U.S. Department of Commerce, Office of Human Resources Management, Department of Commerce Human Capital Client Services, Office of Employment and Compensation, 14th and Constitution Avenue NW, Room 50013, Washington, DC 20230, at (202) 482–6342.

SUPPLEMENTARY INFORMATION: In accordance with 5 U.S.C. 4314(c)(4), the Office of the Secretary, Department of Commerce (DOC), announces the appointment of those individuals who have been selected to serve as members of the Office of the Secretary Performance Review Board. The

Performance Review Board is responsible for (1) reviewing performance appraisals and ratings of Senior Executive Service (SES) and (SL) members and (2) making recommendations to the appointing authority on other performance management issues, such as pay adjustments, bonuses and Presidential Rank Awards. The appointment of these members to the Performance Review Board will be for a period of twenty-four (24) months. The name, position title, and type of appointment of each member of the Performance Review Board are set forth below:

1. Olivia Bradley, Deputy for Procurement Management, Policy and Performance Excellence, Career SES
2. Beth Grossman, Assistant General Counsel for Legislation and Regulation, OGC, Career SES
3. Robert Heilferty, Chief Counsel for Trade Enforcement and Compliance, OGC Career SES
4. LaJeune Desmukes, Director, Office of Small and Disadvantaged Business Utilization, OS, Career SES
5. James Maeder, Deputy Assistant Secretary for AD/CVD Operations, ITA, Career SES
6. John Costello, DAS for Intelligence and Security, OS, Non-career SES
7. Stephen Gardner, Chief Counsel for Commercial Law Development Program, OGC, Career SES

Dated: October 28, 2020.

Joan Nagielski,

Human Resources Specialist, Office of Employment and Compensation, Department of Commerce Human Capital Client Services, Office of Human Resources Management, Office of the Secretary, Department of Commerce.

[FR Doc. 2020–24281 Filed 11–2–20; 8:45 am]

BILLING CODE 3510–25–P

DEPARTMENT OF COMMERCE

Membership of the Performance Review Board for Economic Development Administration (EDA), National Telecommunications and Information Administration (NTIA), Bureau of Industry and Security (BIS), and Minority Business Development Agency (MBDA)

AGENCY: EDA, NTIA, BIS, MBDA, Department of Commerce.

ACTION: Notice of membership.

SUMMARY: The EDA, NTIA, BIS and MBDA, Department of Commerce (DOC), announce the appointment of those individuals who have been selected to serve as members of the Performance Review Board. The Performance Review Board is responsible for reviewing performance appraisals and ratings of Senior Executive Service (SES) members and Senior Level (SL) members and making recommendations to the appointing authority on other performance management issues, such as pay adjustments, bonuses and Presidential Rank Awards for SES and SL members. The appointment of these members to the Performance Review Board will be for a period of twenty-four (24) months.

DATES: The period of appointment for those individuals selected for EDA, NTIA, BIS and MBDA's Performance Review Board begins on November 3, 2020.

FOR FURTHER INFORMATION CONTACT: Joan Nagielski, U.S. Department of Commerce, Office of Human Resources Management, Department of Commerce Human Capital Client Services, Office of Employment and Compensation, 14th and Constitution Avenue NW, Room 50013, Washington, DC 20230, at (202) 482–6342.

SUPPLEMENTARY INFORMATION: In accordance with 5 U.S.C. 4314(c)(4), the EDA, NTIA, BIS and MBDA, Department of Commerce (DOC), announce the appointment of those individuals who have been selected to serve as members of EDA, NTIA, BIS and MBDA's Performance Review Board. The Performance Review Board is responsible for (1) reviewing performance appraisals and ratings of Senior Executive Service (SES) and Senior Level (SL) members and (2) making recommendations to the appointing authority on other Performance management issues, such as pay adjustments, bonuses and Presidential Rank Awards for SES and SL members. The Appointment of these members to the Performance Review Board will be for a period of twenty-four (24) months. The name, position title, and type of appointment of each member of the Performance Review Board are set forth below:

1. *Department of Commerce, Bureau of Industry and Security (BIS)*, Alexander Lopes, Jr., Director, Office of Non Proliferation and Treaty Compliance, Career SES
2. *Department of Commerce, National Telecommunications and Information Administration (NTIA)*, Peter Tenhula, Deputy Associate Administrator for Spectrum Planning and Policy, Career SES
3. *Department of Commerce, Economic Development Agency (EDA)*, Angela Martinez, Regional Director for Denver Office, Career SES
4. *Department of Commerce, National Telecommunications and Information Administration (NTIA)*, Lisa Casias, Deputy Executive Director, First Responder Network Authority, Career SES
5. *Department of Commerce, National Telecommunications and Information Administration (NTIA)*, Kathy Smith, Chief Counsel, Career SES
6. *Department of Commerce, Economic Development Agency (EDA)*, H. Phillip Paradice, Regional Director, Atlanta Regional Office, Career SES
7. *Department of Commerce, Office of the Secretary, Enterprise Services*, Kurt Bersani, Chief Financial Officer and Director of Administration, Career SES
8. *Department of Commerce, National Telecommunications and Information Administration (NTIA)*, Jeffrey Bratcher, Chief Technology Officer, First Responder Network, NTIA, Career SES

Dated: October 28, 2020.

Joan Nagielski,

Human Resources Specialist, Office of Employment and Compensation, Department of Commerce Human Capital Client Services, Office of Human Resources Management, Office of the Secretary, Department of Commerce.

[FR Doc. 2020–24284 Filed 11–2–20; 8:45 am]

BILLING CODE 3510–25–P

DEPARTMENT OF COMMERCE

International Trade Administration

[A–549–841]

Mattresses From Thailand: Preliminary Affirmative Determination of Sales at Less Than Fair Value, Postponement of Final Determination, and Extension of Provisional Measures

AGENCY: Enforcement and Compliance, International Trade Administration, Department of Commerce.

SUMMARY: The Department of Commerce (Commerce) preliminarily determines that mattresses from Thailand are being, or are likely to be, sold in the United States at less than fair value (LTFV). The period of investigation (POI) is January 1, 2019 through December 31, 2019. Interested parties are invited to comment on this preliminary determination.

DATES: Applicable November 3, 2020.

FOR FURTHER INFORMATION CONTACT: Paola Aleman Ordaz, AD/CVD Operations, Office IV, Enforcement and Compliance, International Trade Administration, U.S. Department of Commerce, 1401 Constitution Avenue NW, Washington, DC 20230; telephone: (202) 482–4031.

SUPPLEMENTARY INFORMATION:

Background

This preliminary determination is made in accordance with section 733(b) of the Tariff Act of 1930, as amended (the Act). Commerce published the notice of initiation of this investigation on April 24, 2020.[1] On August 11, 2020, Commerce postponed the preliminary determination of this investigation and the revised deadline is now October 27, 2020.[2] For a complete description of the events that followed the initiation of this investigation, *see* the Preliminary Decision Memorandum.[3] A list of topics included in the Preliminary Decision Memorandum is included as Appendix II to this notice. The Preliminary Decision Memorandum is a public document and is on file electronically via Enforcement and Compliance's Antidumping and Countervailing Duty Centralized Electronic Service System (ACCESS). ACCESS is available to registered users at *https://access.trade.gov.* In addition, a complete version of the Preliminary Decision Memorandum can be accessed directly at *http://enforcement.trade.gov/frn/.* The signed and the electronic versions of the Preliminary Decision Memorandum are identical in content.

Scope of the Investigation

The product covered by this investigation is mattresses from Thailand. For a full description of the scope of this investigation, *see* Appendix I.

Scope Comments

In accordance with the preamble to Commerce's regulations,[4] the *Initiation Notice* set aside a period of time for parties to raise issues regarding product coverage (*i.e.,* scope).[5] Certain interested parties commented on the scope of the investigation as it appeared in the *Initiation Notice.* For a summary of the product coverage comments and rebuttal responses submitted to the record for this preliminary determination, and accompanying discussion and analysis of all comments timely received, *see* the Preliminary Scope Decision Memorandum.[6] In the Preliminary Scope Decision Memorandum, Commerce determined that it is not preliminarily modifying the scope language as it appeared in the *Initiation Notice. See* the scope in Appendix I to this notice.

The Preliminary Scope Decision Memorandum establishes a deadline to submit scope case briefs, and indicates that there will be no further opportunity for comments on scope-related issues.[7]

Methodology

Commerce is conducting this investigation in accordance with section 731 of the Act. Pursuant to section 776(a) and (b) of the Act, Commerce has preliminarily relied upon facts otherwise available, with adverse inferences to determine the estimated weighted-average dumping margin for Nisco (Thailand) Co., Ltd. (Nisco) and Saffron Living Co., Ltd. (Saffron). For a full description of the methodology underlying the preliminary determination, *see* the Preliminary Decision Memorandum.

All-Others Rate

Sections 733(d)(1)(ii) and 735(c)(5)(A) of the Act provide that in the preliminary determination Commerce shall determine an estimated all-others rate for all exporters and producers not individually examined. This rate shall be an amount equal to the weighted average of the estimated weighted-average dumping margins established for exporters and producers individually investigated, excluding rates that are zero, *de minimis,* or determined entirely under section 776 of the Act.

In the situation where no estimated weighted-average dumping margins other than zero, *de minimis,* or those determined entirely under section 776 of the Act have been established for individually examined entities, in accordance with section 735(c)(5)(B) of the Act, Commerce may use ''any reasonable method to establish the estimated all-others rate for exporters and producers not individually investigated, including averaging the estimated weighted average dumping margins determined for the exporters and producers individually investigated.'' In this investigation, Commerce has preliminarily determined the estimated weighted-average dumping margin for Nisco and Saffron entirely under section 776 of the Act. Therefore, in the absence of a calculated estimated weighted-average dumping margin on the record of this investigation, we have preliminarily decided to calculate the all-others rate by averaging the dumping margins alleged in the Petition, and assigning the rate of 572.56 percent to all other producers and exporters, pursuant to section 735(c)(5)(A) of the Act. For a full description of the methodology underlying Commerce's analysis, *see* the Preliminary Decision Memorandum.

Preliminary Determination

Commerce preliminarily determines that the following estimated weighted-average dumping margins exist:

Exporter/producer	Estimated weighted-average dumping margin (percent)
Nisco (Thailand) Co., Ltd	763.28
Saffron Living Co., Ltd	763.28
All Others	572.56

Suspension of Liquidation

In accordance with section 733(d)(2) of the Act, Commerce will direct U.S. Customs and Border Protection (CBP) to suspend liquidation of entries of subject merchandise, as described in Appendix I, entered, or withdrawn from warehouse, for consumption on or after the date of publication of this notice in the **Federal Register**. Further, pursuant to section 733(d)(1)(B) of the Act and 19 CFR 351.205(d), Commerce will instruct CBP to require a cash deposit equal to the estimated weighted-average dumping margin or the estimated all-others rate, as follows: (1) The cash deposit rate for the respondents listed above will be equal to the company-specific estimated weighted-average dumping margins determined in this preliminary determination; (2) if the exporter is not a respondent identified above, but the producer is, then the cash deposit rate will be equal to the company-specific estimated weighted-average dumping margin established for that producer of the subject merchandise; and (3) the cash deposit rate for all other producers and

[1] *See Mattresses from Cambodia, Indonesia, Malaysia, Serbia, Thailand, the Republic of Turkey, and the Socialist Republic of Vietnam: Initiation of Less-Than-Fair-Value Investigations,* 85 FR 23002 (April 24, 2020) (*Initiation Notice*).

[2] *See Mattresses from Cambodia, Indonesia, Malaysia, Serbia, Thailand, the Republic of Turkey, and the Socialist Republic of Vietnam: Postponement of Preliminary Determinations of Antidumping Duty Investigations,* 85 FR 48505 (August 11, 2020).

[3] *See* Memorandum, ''Decision Memorandum for the Preliminary Determination in the Less-Than-Fair-Value Investigation of Mattresses from Thailand'' dated concurrently with, and hereby adopted by, this notice (Preliminary Decision Memorandum).

[4] *See Antidumping Duties; Countervailing Duties, Final Rule,* 62 FR 27296, 27323 (May 19, 1997).

[5] *See Initiation Notice.*

[6] *See* Memorandum, ''Mattresses from Cambodia, Indonesia, Malaysia, Serbia, Thailand, the Republic of Turkey, the Socialist Republic of Vietnam, and the People's Republic of China: Scope Comments Decision Memorandum for the Preliminary Determination,'' (Preliminary Scope Decision Memorandum), dated concurrently with this preliminary determination.

[7] Case briefs, other written comments, and rebuttal briefs submitted in response to this preliminary determination should not include scope-related issues. *See* Preliminary Scope Decision Memorandum; and ''Public Comment'' section of this notice.

exporters will be equal to the all-others estimated weighted-average dumping margin. These suspension of liquidation instructions will remain in effect until further notice.

Disclosure

Normally, Commerce discloses to interested parties the calculations performed in connection with a preliminary determination within five days of any public announcement or, if there is no public announcement, within five days of the date of publication of the notice of preliminary determination in the **Federal Register**, in accordance with 19 CFR 351.224 (b). However, because Commerce preliminarily applied AFA to the individually examined companies, Nisco and Saffron, in this investigation, in accordance with section 776 of the Act, and applied the AFA rate, which is based solely on the Petition, there are no calculations to disclose.

Verification

Because the examined respondents in this investigation did not provide information requested by Commerce, and Commerce preliminarily determines that each of the examined respondents have failed to cooperate by not acting to the best of their ability pursuant to section 776(b) of the Act, we will not conduct verification.

Public Comment

Case briefs or other written comments on non-scope issues may be submitted to the Assistant Secretary for Enforcement and Compliance no later than 21 days after the date of publication of the preliminarily determination.[8] Rebuttal briefs, limited to issues raised in case briefs, may be submitted no later than seven days after the deadline date for case briefs.[9] Note that Commerce has modified certain of its requirements for serving documents containing business proprietary information until further notice.[10] Pursuant to 19 CFR 351.309(c)(2) and (d)(2), parties who submit case briefs or rebuttal briefs in this investigation are encouraged to submit with each argument: (1) A statement of the issue; (2) a brief summary of the argument; and (3) a table of authorities.

Pursuant to 19 CFR 351.310(c), interested parties who wish to request a hearing, limited to issues raised in the case and rebuttal briefs, must submit a written request to the Assistant Secretary for Enforcement and Compliance, U.S. Department of Commerce, within 30 days after the date of publication of this notice. Requests should contain the party's name, address, and telephone number, the number of participants, whether any participant is a foreign national, and a list of the issues to be discussed. If a request for hearing is made, Commerce intends to hold the hearing at a time and date to be determined. Parties should confirm by telephone the date and time of the hearing two days before the scheduled date of the hearing.

Postponement of Final Determination and Extension of Provisional Measures

Section 735(a)(2) of the Act provides that a final determination may be postponed until not later than 135 days after the date of the publication of the preliminary determination if, in the event of an affirmative preliminary determination, a request for such postponement is made by exporters who account for a significant proportion of exports of the subject merchandise, or in the event of a negative preliminary determination, a request for such postponement is made by the petitioner. Section 351.210(e)(2) of Commerce's regulations requires that a request by exporters for postponement of the final determination be accompanied by a request for extension of provisional measures from a four-month period to a period not more than six months in duration.

On October 9, 2020, pursuant to 19 CFR 351.210(b)(2)(ii)(e) and 19 CFR 351.210(e), Saffron requested that Commerce postpone the final determination in this manner until 135 days after the date of publication of the preliminary determination and that provisional measures be excluded to a period to not exceed six months.[11] In accordance with section 735(a)(2)(A) of the Act and 19 CFR 351.210(b)(2)(ii), because: (1) The preliminary determination is affirmative; (2) the requesting exporter accounts for a significant proportion of exports of the subject merchandise; and (3) no compelling reasons for denial exist, Commerce is postponing the final determination and extending the provisional measures from a four-month period to a period not greater than six months. Accordingly, Commerce will make its final determination no later than 135 days after the date of publication of this preliminary determination.

International Trade Commission Notification

In accordance with section 733(f) of the Act, Commerce will notify the International Trade Commission (ITC) of its preliminary determination. If the final determination is affirmative, the ITC will determine before the later of 120 days after the date of this preliminary determination or 45 days after the final determination whether these imports materially injure, or threaten material injury to, the U.S. industry.

Notification to Interested Parties

This determination is issued and published in accordance with sections 733(f) and 777(i)(1) of the Act, and 19 CFR 351.205(c).

Dated: October 27, 2020.

Jeffrey I. Kessler,

Assistant Secretary for Enforcement and Compliance.

Appendix I

Scope of the Investigation

The products covered by this investigation are all types of youth and adult mattresses. The term ''mattress'' denotes an assembly of materials that at a minimum includes a ''core,'' which provides the main support system of the mattress, and may consist of innersprings, foam, other resilient filling, or a combination of these materials. Mattresses may also contain: (1) ''upholstery,'' the material between the core and the top panel of the ticking on a single-sided mattress; or between the core and the top and bottom panel of the ticking on a double-sided mattress; and/or (2) ''ticking,'' the outermost layer of fabric or other material (*e.g.,* vinyl) that encloses the core and any upholstery, also known as a cover.

The scope of this investigation is restricted to only ''adult mattresses'' and ''youth mattresses.'' ''Adult mattresses'' are frequently described as ''twin,'' ''extra-long twin,'' ''full,'' ''queen,'' ''king,'' or ''California king'' mattresses. ''Youth mattresses'' are typically described as ''crib,'' ''toddler,'' or ''youth'' mattresses. All adult and youth mattresses are included regardless of size and size description.

The scope encompasses all types of ''innerspring mattresses,'' ''non-innerspring mattresses,'' and ''hybrid mattresses.'' ''Innerspring mattresses'' contain innersprings, a series of metal springs joined together in sizes that correspond to the dimensions of mattresses. Mattresses that contain innersprings are referred to as ''innerspring mattresses'' or ''hybrid mattresses.'' ''Hybrid mattresses'' contain two or more support systems as the core, such as layers of both memory foam and innerspring units.

[8] *See* 19 CFR 351.309©(1)(i); and 19 CFR 351.303 (for general filling requirements). Commerce has exercised its discretion under 19 CFR 351.309(c)(1)(i) to alter the time limit for submission of case briefs.

[9] *See* 19 CFR 351.309; *see also* 19 CFR 351.303 (for general filing requirements).

[10] *See Temporary Rule Modifying AD/CVD Service Requirements Due to COVID–19; Extension of Effective Period,* 85 FR 41363 (July 10, 2020).

[11] *See* Saffron's Letter, ''Mattresses from Thailand: Request to Postpone Final Determination,'' dated October 9, 2020.

''Non-innerspring mattresses'' are those that do not contain any innerspring units. They are generally produced from foams (*e.g.,* polyurethane, memory (viscoelastic), latex foam, gel- infused viscoelastic (gel foam), thermobonded polyester, polyethylene) or other resilient filling.

Mattresses covered by the scope of this investigation may be imported independently, as part of furniture or furniture mechanisms (*e.g.,* convertible sofa bed mattresses, sofa bed mattresses imported with sofa bed mechanisms, corner group mattresses, day-bed mattresses, roll-away bed mattresses, high risers, trundle bed mattresses, crib mattresses), or as part of a set in combination with a ''mattress foundation.'' ''Mattress foundations'' are any base or support for a mattress. Mattress foundations are commonly referred to as ''foundations,'' ''boxsprings,'' ''platforms,'' and/or ''bases.'' Bases can be static, foldable, or adjustable. Only the mattress is covered by the scope if imported as part of furniture, with furniture mechanisms, or as part of a set in combination with a mattress foundation.

Excluded from the scope of this investigation are ''futon'' mattresses. A ''futon'' is a bi-fold frame made of wood, metal, or plastic material, or any combination thereof, that functions as both seating furniture (such as a couch, love seat, or sofa) and a bed. A ''futon mattress'' is a tufted mattress, where the top covering is secured to the bottom with thread that goes completely through the mattress from the top through to the bottom, and it does not contain innersprings or foam. A futon mattress is both the bed and seating surface for the futon.

Also excluded from the scope are airbeds (including inflatable mattresses) and waterbeds, which consist of air- or liquid-filled bladders as the core or main support system of the mattress.

Also excluded is certain multifunctional furniture that is convertible from seating to sleeping, regardless of filler material or components, where that filler material or components are upholstered, integrated into the design and construction of, and inseparable from, the furniture framing, and the outermost layer of the multifunctional furniture converts into the sleeping surface. Such furniture may, and without limitation, be commonly referred to as ''convertible sofas,'' ''sofabeds,'' ''sofa chaise sleepers,'' ''futons,'' ''ottoman sleepers'' or a like description.

Also excluded from the scope of this investigation are any products covered by the existing antidumping duty orders on uncovered innerspring units from China or Vietnam. *See Uncovered Innerspring Units from the People's Republic of China: Notice of Antidumping Duty Order,* 74 FR 7661 (February 19, 2009); *Uncovered Innerspring Units from the Socialist Republic of Vietnam,* 73 FR 75391 (December 11, 2008).

Also excluded from the scope of this investigation are bassinet pads with a nominal length of less than 39 inches, a nominal width less than 25 inches, and a nominal depth of less than 2 inches.

Additionally, also excluded from the scope of this investigation are ''mattress toppers.'' A ''mattress topper'' is a removable bedding accessory that supplements a mattress by providing an additional layer that is placed on top of a mattress. Excluded mattress toppers have a height of four inches or less.

The products subject to this investigation are currently properly classifiable under HTSUS subheadings: 9404.21.0010, 9404.21.0013, 9404.29.1005, 9404.29.1013, 9404.29.9085, and 9404.29.9087. Products subject to this investigation may also enter under HTSUS subheadings: 9404.21.0095, 9404.29.1095, 9404.29.9095, 9401.40.0000, and 9401.90.5081. Although the HTSUS subheadings are provided for convenience and customs purposes, the written description of the merchandise subject to this investigation is dispositive.

Appendix II

List of Topics Discussed in the Preliminary Decision Memorandum

I. Summary
II. Background
III. Period of Investigation
IV. Application of Facts Available and Use of Adverse Inference
V. Recommendation

[FR Doc. 2020–24296 Filed 11–2–20; 8:45 am]

BILLING CODE 3510–DS–P

DEPARTMENT OF COMMERCE

International Trade Administration

[A–489–841]

Mattresses From the Republic of Turkey: Preliminary Affirmative Determination of Sales at Less Than Fair Value, Preliminary Negative Determination of Critical Circumstances, Postponement of Final Determination, and Extension of Provisional Measures

AGENCY: Enforcement and Compliance, International Trade Administration, Department of Commerce.

SUMMARY: The Department of Commerce (Commerce) preliminarily determines that mattresses from the Republic of Turkey (Turkey) are being, or are likely to be, sold in the United States at less than fair value (LTFV). The period of investigation (POI) is January 1, 2019 through December 31, 2019. Interested parties are invited to comment on this preliminary determination.

DATES: Applicable November 3, 2020.

FOR FURTHER INFORMATION CONTACT: Jacob Keller, AD/CVD Operations, Office I, Enforcement and Compliance, International Trade Administration, U.S. Department of Commerce, 1401 Constitution Avenue NW, Washington, DC 20230; telephone: (202) 482–4849.

SUPPLEMENTARY INFORMATION:

Background

This preliminary determination is made in accordance with section 733(b) of the Tariff Act of 1930, as amended (the Act). Commerce published the notice of initiation of this investigation on April 24, 2020.[1] On August 11, 2020, Commerce postponed the preliminary determination of this investigation and the revised deadline is now October 27, 2020.[2] For a complete description of the events that followed the initiation of this investigation, *see* the Preliminary Decision Memorandum.[3] A list of topics included in the Preliminary Decision Memorandum is included as Appendix II to this notice. The Preliminary Decision Memorandum is a public document and is on file electronically via Enforcement and Compliance's Antidumping and Countervailing Duty Centralized Electronic Service System (ACCESS). ACCESS is available to registered users at *https://access.trade.gov.* In addition, a complete version of the Preliminary Decision Memorandum can be accessed directly at *http://enforcement.trade.gov/frn/.* The signed and the electronic versions of the Preliminary Decision Memorandum are identical in content.

Scope of the Investigation

The product covered by this investigation is mattresses from Turkey. For a full description of the scope of this investigation, *see* Appendix I.

Scope Comments

In accordance with the preamble to Commerce's regulations,[4] the *Initiation Notice* set aside a period of time for parties to raise issues regarding product coverage (*i.e.,* scope).[5] Certain interested parties commented on the scope of the investigation as it appeared in the *Initiation Notice.* For a summary of the product coverage comments and rebuttal responses submitted to the record for this preliminary determination, and accompanying

---

[1] *See Mattresses from Cambodia, Indonesia, Malaysia, Serbia, Thailand, the Republic of Turkey, and the Socialist Republic of Vietnam: Initiation of Less-Than-Fair-Value Investigations,* 85 FR 23002 (April 24, 2020) (*Initiation Notice*).

[2] *See Mattresses from Cambodia, Indonesia, Malaysia, Serbia, Thailand, the Republic of Turkey, and the Socialist Republic of Vietnam: Postponement of Preliminary Determinations in the Less-Than-Fair-Value Investigations,* 85 FR 48505 (August 11, 2020).

[3] *See* Memorandum, ''Decision Memorandum for the Preliminary Determination in the Less-Than-Fair-Value Investigation of Mattresses from the Republic of Turkey'' dated concurrently with, and hereby adopted by, this notice (Preliminary Decision Memorandum).

[4] *See Antidumping Duties; Countervailing Duties, Final Rule,* 62 FR 27296, 27323 (May 19, 1997).

[5] *See Initiation Notice.*

discussion and analysis of all comments timely received, *see* the Preliminary Scope Decision Memorandum.[6] In the Preliminary Scope Decision Memorandum, Commerce determined that it is not preliminarily modifying the scope language as it appeared in the *Initiation Notice. See* the scope in Appendix I to this notice.

The Preliminary Scope Decision Memorandum establishes a deadline to submit scope case briefs, and indicates that there will be no further opportunity for comments on scope-related issues.[7]

Methodology

Commerce is conducting this investigation in accordance with section 731 of the Act. Commerce has calculated export prices in accordance with section 772(a) of the Act. Normal value (NV) is calculated in accordance with section 773 of the Act. Furthermore, pursuant to section 776(a) of the Act, Commerce has preliminarily relied partially upon facts otherwise available for BRN Yatak Baza Ev Tekstili Insaat Sanayi Ticaret A.S. (BRN). For a full description of the methodology underlying the preliminary determination, *see* the Preliminary Decision Memorandum.

Preliminary Negative Determination of Critical Circumstances

In accordance with section 733(e) of the Act and 19 CFR 351.206, Commerce preliminarily finds that critical circumstances do not exist for BRN or for all other exporters and producers not individually examined. For a full description of the methodology and results of Commerce's critical circumstances analysis, *see* the Preliminary Decision Memorandum.

All-Others Rate

Sections 733(d)(1)(ii) and 735(c)(5)(A) of the Act provide that in the preliminary determination Commerce shall determine an estimated all-others rate for all exporters and producers not individually examined. This rate shall be an amount equal to the weighted average of the estimated weighted-average dumping margins established for exporters and producers individually investigated, excluding any zero and *de minimis* margins, and any margins determined entirely under section 776 of the Act.

Commerce calculated an individual estimated weighted-average dumping margin for BRN, the only individually examined exporter/producer in this investigation. Because the only individually calculated dumping margin is not zero, *de minimis,* or based entirely on facts otherwise available, the estimated weighted-average dumping margin calculated for BRN is the margin assigned to all other producers and exporters, pursuant to section 735(c)(5)(A) of the Act.

Preliminary Determination

Commerce preliminarily determines that the following estimated weighted-average dumping margins exist:

Exporter/producer	Estimated weighted-average dumping margin (percent)
BRN Yatak Baza Ev Tekstili Insaat Sanayi Ticaret A.S	20.03
All Others	20.03

Suspension of Liquidation

In accordance with section 733(d)(2) of the Act, Commerce will direct U.S. Customs and Border Protection (CBP) to suspend liquidation of entries of subject merchandise, as described in Appendix I, entered, or withdrawn from warehouse, for consumption on or after the date of publication of this notice in the **Federal Register**. Further, pursuant to section 733(d)(1)(B) of the Act and 19 CFR 351.205(d), Commerce will instruct CBP to require a cash deposit equal to the estimated weighted-average dumping margin or the estimated all-others rate, as follows: (1) The cash deposit rate for the respondents listed above will be equal to the company-specific estimated weighted-average dumping margins determined in this preliminary determination; (2) if the exporter is not a respondent identified above, but the producer is, then the cash deposit rate will be equal to the company-specific estimated weighted-average dumping margin established for that producer of the subject merchandise; and (3) the cash deposit rate for all other producers and exporters will be equal to the all-others estimated weighted-average dumping margin. These suspension of liquidation instructions will remain in effect until further notice.

Disclosure

Commerce intends to disclose its calculations and analysis performed to interested parties in this preliminary determination within five days of any public announcement or, if there is no public announcement, within five days of the date of publication of this notice in accordance with 19 CFR 351.224(b).

Verification

Commerce is currently unable to conduct on-site verification of the information relied upon in making its final determination in this investigation. Accordingly, we intend to take additional steps in lieu of on-site verification. Commerce will notify interested parties of any additional documentation or information required.

Public Comment

Case briefs or other written comments may be submitted to the Assistant Secretary for Enforcement and Compliance. A timeline for the submission of case briefs and written comments will be notified to interested parties at a later date. Rebuttal briefs, limited to issues raised in case briefs, may be submitted no later than seven days after the deadline date for case briefs.[8] Pursuant to 19 CFR 351.309(c)(2) and (d)(2), parties who submit case briefs or rebuttal briefs in this investigation are encouraged to submit with each argument: (1) A statement of the issue; (2) a brief summary of the argument; and (3) a table of authorities. Note that Commerce has temporarily modified certain of its requirements for serving documents containing business proprietary information, until further notice.[9]

Pursuant to 19 CFR 351.310(c), interested parties who wish to request a hearing, limited to issues raised in the case and rebuttal briefs, must submit a written request to the Assistant Secretary for Enforcement and Compliance, U.S. Department of Commerce, within 30 days after the date of publication of this notice. Requests should contain the party's name, address, and telephone number, the number of participants, whether any participant is a foreign national, and a list of the issues to be discussed. If a request for a hearing is made, Commerce intends to hold the hearing at a time and date to be determined. Parties should confirm by telephone the date, time, and location of the hearing two days before the scheduled date.

[6] *See* Memorandum, ''Mattresses from Cambodia, Indonesia, Malaysia, Serbia, Thailand, the Republic of Turkey, the Socialist Republic of Vietnam, and the People's Republic of China: Scope Comments Decision Memorandum for the Preliminary Determination,'' (Preliminary Scope Decision Memorandum), dated concurrently with this preliminary determination.

[7] Case briefs, other written comments, and rebuttal briefs submitted in response to this preliminary determination should not include scope-related issues. *See* Preliminary Scope Decision Memorandum; and ''Public Comment'' section of this notice.

[8] *See Temporary Rule Modifying AD/CVD Service Requirements Due to COVID–19; Extension of Effective Period,* 85 FR 41363 (July 10, 2020).

[9] *Id.*

Postponement of Final Determination and Extension of Provisional Measures

Section 735(a)(2) of the Act provides that a final determination may be postponed until not later than 135 days after the date of the publication of the preliminary determination if, in the event of an affirmative preliminary determination, a request for such postponement is made by exporters who account for a significant proportion of exports of the subject merchandise, or in the event of a negative preliminary determination, a request for such postponement is made by the petitioner. Section 351.210(e)(2) of Commerce's regulations requires that a request by exporters for postponement of the final determination be accompanied by a request for extension of provisional measures from a four-month period to a period not more than six months in duration.

On October 8, 2020, pursuant to 19 CFR 351.210(e), BRN requested that Commerce postpone the final determination and that provisional measures be extended to a period not to exceed six months.[10] In accordance with section 735(a)(2)(A) of the Act and 19 CFR 351.210(b)(2)(ii), because: (1) The preliminary determination is affirmative; (2) the requesting exporter accounts for a significant proportion of exports of the subject merchandise; and (3) no compelling reasons for denial exist, Commerce is postponing the final determination and extending the provisional measures from a four-month period to a period not greater than six months. Accordingly, Commerce will make its final determination no later than 135 days after the date of publication of this preliminary determination.

International Trade Commission Notification

In accordance with section 733(f) of the Act, Commerce will notify the International Trade Commission (ITC) of its preliminary determination. If the final determination is affirmative, the ITC will determine before the later of 120 days after the date of this preliminary determination or 45 days after the final determination whether these imports materially injure, or threaten material injury to, the U.S. industry.

Notification to Interested Parties

This determination is issued and published in accordance with sections 733(f) and 777(i)(1) of the Act, and 19 CFR 351.205(c).

Dated: October 27, 2020.

Jeffrey I. Kessler,

Assistant Secretary for Enforcement and Compliance.

Appendix I

Scope of the Investigation

The products covered by this investigation are all types of youth and adult mattresses. The term ''mattress'' denotes an assembly of materials that at a minimum includes a ''core,'' which provides the main support system of the mattress, and may consist of innersprings, foam, other resilient filling, or a combination of these materials. Mattresses may also contain: (1) ''upholstery,'' the material between the core and the top panel of the ticking on a single-sided mattress; or between the core and the top and bottom panel of the ticking on a double-sided mattress; and/or (2) ''ticking,'' the outermost layer of fabric or other material (*e.g.,* vinyl) that encloses the core and any upholstery, also known as a cover.

The scope of this investigation is restricted to only ''adult mattresses'' and ''youth mattresses.'' ''Adult mattresses'' are frequently described as ''twin,'' ''extra-long twin,'' ''full,'' ''queen,'' ''king,'' or ''California king'' mattresses. ''Youth mattresses'' are typically described as ''crib,'' ''toddler,'' or ''youth'' mattresses. All adult and youth mattresses are included regardless of size and size description.

The scope encompasses all types of ''innerspring mattresses,'' ''non-innerspring mattresses,'' and ''hybrid mattresses.'' ''Innerspring mattresses'' contain innersprings, a series of metal springs joined together in sizes that correspond to the dimensions of mattresses. Mattresses that contain innersprings are referred to as ''innerspring mattresses'' or ''hybrid mattresses.'' ''Hybrid mattresses'' contain two or more support systems as the core, such as layers of both memory foam and innerspring units.

''Non-innerspring mattresses'' are those that do not contain any innerspring units. They are generally produced from foams (*e.g.,* polyurethane, memory (viscoelastic), latex foam, gel-infused viscoelastic (gel foam), thermobonded polyester, polyethylene) or other resilient filling.

Mattresses covered by the scope of this investigation may be imported independently, as part of furniture or furniture mechanisms (*e.g.,* convertible sofa bed mattresses, sofa bed mattresses imported with sofa bed mechanisms, corner group mattresses, day-bed mattresses, roll-away bed mattresses, high risers, trundle bed mattresses, crib mattresses), or as part of a set in combination with a ''mattress foundation.'' ''Mattress foundations'' are any base or support for a mattress. Mattress foundations are commonly referred to as ''foundations,'' ''boxsprings,'' ''platforms,'' and/or ''bases.'' Bases can be static, foldable, or adjustable. Only the mattress is covered by the scope if imported as part of furniture, with furniture mechanisms, or as part of a set in combination with a mattress foundation.

Excluded from the scope of this investigation are ''futon'' mattresses. A ''futon'' is a bi-fold frame made of wood, metal, or plastic material, or any combination thereof, that functions as both seating furniture (such as a couch, love seat, or sofa) and a bed. A ''futon mattress'' is a tufted mattress, where the top covering is secured to the bottom with thread that goes completely through the mattress from the top through to the bottom, and it does not contain innersprings or foam. A futon mattress is both the bed and seating surface for the futon.

Also excluded from the scope are airbeds (including inflatable mattresses) and waterbeds, which consist of air- or liquid-filled bladders as the core or main support system of the mattress.

Also excluded is certain multifunctional furniture that is convertible from seating to sleeping, regardless of filler material or components, where that filler material or components are upholstered, integrated into the design and construction of, and inseparable from, the furniture framing, and the outermost layer of the multifunctional furniture converts into the sleeping surface. Such furniture may, and without limitation, be commonly referred to as ''convertible sofas,'' ''sofabeds,'' ''sofa chaise sleepers,'' ''futons,'' ''ottoman sleepers'' or a like description.

Also excluded from the scope of this investigation are any products covered by the existing antidumping duty orders on uncovered innerspring units from China or Vietnam. *See Uncovered Innerspring Units from the People's Republic of China: Notice of Antidumping Duty Order,* 74 FR 7661 (February 19, 2009); *Uncovered Innerspring Units from the Socialist Republic of Vietnam,* 73 FR 75391 (December 11, 2008).

Also excluded from the scope of this investigation are bassinet pads with a nominal length of less than 39 inches, a nominal width less than 25 inches, and a nominal depth of less than 2 inches.

Additionally, also excluded from the scope of this investigation are ''mattress toppers.'' A ''mattress topper'' is a removable bedding accessory that supplements a mattress by providing an additional layer that is placed on top of a mattress. Excluded mattress toppers have a height of four inches or less.

The products subject to this investigation are currently properly classifiable under HTSUS subheadings: 9404.21.0010, 9404.21.0013, 9404.29.1005, 9404.29.1013, 9404.29.9085, and 9404.29.9087. Products subject to this investigation may also enter under HTSUS subheadings: 9404.21.0095, 9404.29.1095, 9404.29.9095, 9401.40.0000, and 9401.90.5081. Although the HTSUS subheadings are provided for convenience and customs purposes, the written description of the merchandise subject to this investigation is dispositive.

Appendix II

List of Topics Discussed in the Preliminary Decision Memorandum

I. Summary
II. Background
III. Period of Investigation
IV. Application of Facts Available

[10] *See* BRN's Letter, ''Mattresses from the Republic of Turkey; Request to Extend Final Determination,'' dated October 8, 2020.

V. Preliminary Negative Determination of Critical Circumstances
VI. Discussion of the Methodology
VII. Currency Conversion
VIII. Recommendation

[FR Doc. 2020–24299 Filed 11–2–20; 8:45 am]

BILLING CODE 3510–DS–P

DEPARTMENT OF COMMERCE

International Trade Administration

[A–557–818]

Mattresses From Malaysia: Preliminary Affirmative Determination of Sales at Less Than Fair Value, Postponement of Final Determination, and Extension of Provisional Measures

AGENCY: Enforcement and Compliance, International Trade Administration, Department of Commerce.

SUMMARY: The Department of Commerce (Commerce) preliminarily determines that mattresses from Malaysia are being, or are likely to be, sold in the United States at less than fair value (LTFV). The period of investigation (POI) is January 1, 2019 through December 31, 2019. Interested parties are invited to comment on this preliminary determination.

DATES: Applicable November 3, 2020.

FOR FURTHER INFORMATION CONTACT: Joshua Simonidis or Dennis McClure, AD/CVD Operations, Office VIII, Enforcement and Compliance, International Trade Administration, U.S. Department of Commerce, 1401 Constitution Avenue NW, Washington, DC 20230; telephone: (202) 482–0608 or (202) 482–5973, respectively.

SUPPLEMENTARY INFORMATION:

Background

This preliminary determination is made in accordance with section 733(b) of the Tariff Act of 1930, as amended (the Act). Commerce published the notice of initiation of this investigation on April 24, 2020.[1] On August 11, 2020, Commerce postponed the preliminary determination of this investigation and the revised deadline is now October 27, 2020.[2] For a complete description of the events that followed the initiation of this investigation, *see* the Preliminary Decision Memorandum.[3] A list of topics included in the Preliminary Decision Memorandum is included as Appendix II to this notice. The Preliminary Decision Memorandum is a public document and is on file electronically via Enforcement and Compliance's Antidumping and Countervailing Duty Centralized Electronic Service System (ACCESS). ACCESS is available to registered users at *https://access.trade.gov.* In addition, a complete version of the Preliminary Decision Memorandum can be accessed directly at *http://enforcement.trade.gov/frn/.* The signed and the electronic versions of the Preliminary Decision Memorandum are identical in content.

Scope of the Investigation

The product covered by this investigation is mattresses from Malaysia. For a full description of the scope of this investigation, *see* Appendix I.

Scope Comments

In accordance with the preamble to Commerce's regulations,[4] the *Initiation Notice* set aside a period of time for parties to raise issues regarding product coverage (*i.e.,* scope).[5] Certain interested parties commented on the scope of the investigation as it appeared in the *Initiation Notice.* For a summary of the product coverage comments and rebuttal responses submitted to the record for this preliminary determination, and accompanying discussion and analysis of all comments timely received, *see* the Preliminary Scope Decision Memorandum.[6] In the Preliminary Scope Decision Memorandum, Commerce determined that it is not preliminarily modifying the scope language as it appeared in the *Initiation Notice. See* the scope in Appendix I to this notice.

The Preliminary Scope Decision Memorandum establishes a deadline to submit scope case briefs, and indicates that there will be no further opportunity for comments on scope-related issues.[7]

Methodology

Commerce is conducting this investigation in accordance with section 731 of the Act. Pursuant to section 776(a) and (b) of the Act, Commerce has preliminarily relied upon facts otherwise available with adverse inferences to determine the estimated weighted-average dumping margin for Delandis Furniture (M) Sdn Bhd (Delandis), Far East Foam Industries Sdn Bhd (Far East Foam), and Vision Foam Ind. Sdn Bhd. (Vision Foam). For a full description of the methodology underlying the preliminary determination, *see* the Preliminary Decision Memorandum.

All-Others Rate

Sections 733(d)(1)(ii) and 735(c)(5)(A) of the Act provide that in the preliminary determination Commerce shall determine an estimated all-others rate for all exporters and producers not individually examined. This rate shall be an amount equal to the weighted average of the estimated weighted-average dumping margins established for exporters and producers individually investigated, excluding rates that are zero, *de minimis,* or determined entirely under section 776 of the Act.

In situations where no estimated weighted-average dumping margins other than zero, *de minimis,* or those determined entirely under section 776 of the Act have been established for individually examined entities, in accordance with section 735(c)(5)(B) of the Act, Commerce may use ''any reasonable method to establish the estimated all-others rate for exporters and producers not individually investigated, including averaging the estimated weighted average dumping margins determined for the exporters and producers individually investigated.'' In this investigation, Commerce has preliminarily determined the estimated weighted-average dumping margin for Delandis, Far East Foam, and Vision Foam entirely under section 776 of the Act. Therefore, in the absence of another estimated weighted-average dumping margin on the record of this investigation, as the all-others rate, we are preliminarily assigning the sole dumping margin alleged in the Petition, which is 42.92 percent. For a

[1] *See Mattresses from Cambodia, Indonesia, Malaysia, Serbia, Thailand, the Republic of Turkey, and the Socialist Republic of Vietnam: Initiation of Less-Than-Fair-Value Investigations,* 85 FR 23002 (April 24, 2020) (*Initiation Notice*).

[2] *See Mattresses from Cambodia, Indonesia, Malaysia, Serbia, Thailand, the Republic of Turkey, and the Socialist Republic of Vietnam: Postponement of Preliminary Determinations in the Less-Than-Fair-Value Investigations,* 85 FR 48505 (August 11, 2020).

[3] *See* Memorandum, ''Decision Memorandum for the Preliminary Determination in the Less-Than-Fair-Value Investigation of Mattresses from Malaysia,'' dated concurrently with, and hereby adopted by, this notice (Preliminary Decision Memorandum).

[4] *See Antidumping Duties; Countervailing Duties, Final Rule,* 62 FR 27296, 27323 (May 19, 1997).

[5] *See Initiation Notice.*

[6] *See* Memorandum, ''Mattresses from Cambodia, Indonesia, Malaysia, Serbia, Thailand, the Republic of Turkey, the Socialist Republic of Vietnam, and the People's Republic of China: Scope Comments Decision Memorandum for the Preliminary Determination,'' (Preliminary Scope Decision Memorandum), dated concurrently with this preliminary determination.

[7] Case briefs, other written comments, and rebuttal briefs submitted in response to this preliminary determination should not include scope-related issues. *See* Preliminary Scope Decision Memorandum; and ''Public Comment'' section of this notice.

full description of the methodology underlying Commerce's analysis, *see* the Preliminary Decision Memorandum.

Preliminary Determination

Commerce preliminarily determines that the following estimated weighted-average dumping margins exist:

Exporter/producer	Estimated weighted-average dumping margin (percent)
Delandis Furniture (M) Sdn Bhd	42.92
Far East Foam Industries Sdn Bhd	42.92
Vision Foam Ind. Sdn Bhd	42.92
All Others	42.92

Suspension of Liquidation

In accordance with section 733(d)(2) of the Act, Commerce will direct U.S. Customs and Border Protection (CBP) to suspend liquidation of entries of subject merchandise, as described in Appendix I, entered, or withdrawn from warehouse, for consumption on or after the date of publication of this notice in the **Federal Register**. Further, pursuant to section 733(d)(1)(B) of the Act and 19 CFR 351.205(d), Commerce will instruct CBP to require a cash deposit equal to the estimated weighted-average dumping margin, as follows: (1) The cash deposit rate for the respondents listed above will be equal to the company-specific estimated weighted-average dumping margin determined in this preliminary determination; (2) if the exporter is not a respondent identified above, but the producer is, then the cash deposit rate will be equal to the company-specific estimated weighted-average dumping margin established for that producer of the subject merchandise; and (3) the cash deposit rate for all other producers and exporters will be equal to the all-others estimated weighted-average dumping margin. These suspension of liquidation instructions will remain in effect until further notice.

Disclosure

Normally, Commerce discloses to interested parties the calculations performed in connection with a preliminary determination within five days of any public announcement or, if there is no public announcement, within five days of the date of publication of the notice of preliminary determination in the **Federal Register**, in accordance with 19 CFR 351.224(b). However, because Commerce preliminarily applied adverse facts available (AFA) to determine the estimated weighted-average dumping margin for each of the individually examined companies, *i.e.,* Delandis, Far East Foam and Vision Foam, in this investigation, in accordance with section 776 of the Act, and the applied AFA rate is based solely on the Petition, there are no calculations to disclose.

Verification

Because the examined respondents in this investigation did not provide information requested by Commerce, and Commerce preliminarily determines each of the examined respondents to have been uncooperative, we will not conduct verification.

Public Comment

Case briefs or other written comments on non-scope issues may be submitted to the Assistant Secretary for Enforcement and Compliance. Interested parties will be notified of a timeline for the submission of such case briefs and written comments at a later date. Rebuttal briefs, limited to issues raised in case briefs, may be submitted no later than seven days after the deadline date for case briefs. Note that Commerce has modified certain of its requirements for serving documents containing business proprietary information until further notice.[8] Pursuant to 19 CFR 351.309(c)(2) and (d)(2), parties who submit case briefs or rebuttal briefs in this investigation are encouraged to submit with each argument: (1) A statement of the issue; (2) a brief summary of the argument; and (3) a table of authorities.

Pursuant to 19 CFR 351.310(c), interested parties who wish to request a hearing, limited to issues raised in the case and rebuttal briefs, must submit a written request to the Assistant Secretary for Enforcement and Compliance, U.S. Department of Commerce, within 30 days after the date of publication of this notice. Requests should contain the party's name, address, and telephone number, the number of participants, whether any participant is a foreign national, and a list of the issues to be discussed. If a request for a hearing is made, Commerce intends to hold the hearing at a time and date to be determined. Parties should confirm by telephone the date, time, and location of the hearing two days before the scheduled date.

Postponement of Final Determination and Extension of Provisional Measures

Section 735(a)(2) of the Act provides that a final determination may be postponed until not later than 135 days after the date of the publication of the preliminary determination if, in the event of an affirmative preliminary determination, a request for such postponement is made by exporters who account for a significant proportion of exports of the subject merchandise, or in the event of a negative preliminary determination, a request for such postponement is made by the petitioner. Section 351.210(e)(2) of Commerce's regulations requires that a request by exporters for postponement of the final determination be accompanied by a request for extension of provisional measures from a four-month period to a period not more than six months in duration.

On October 16, 2020, pursuant to 19 CFR 351.210(e), Far East Foam requested that Commerce postpone the final determination and that provisional measures be extended to a period not to exceed six months.[9] In accordance with section 735(a)(2)(A) of the Act and 19 CFR 351.210(b)(2)(ii), because: (1) The preliminary determination is affirmative; (2) the requesting exporter accounts for a significant proportion of exports of the subject merchandise; and (3) no compelling reasons for denial exist, Commerce is postponing the final determination and extending the provisional measures from a four-month period to a period not greater than six months. Accordingly, Commerce will make its final determination no later than 135 days after the date of publication of this preliminary determination.

International Trade Commission Notification

In accordance with section 733(f) of the Act, Commerce will notify the International Trade Commission (ITC) of its preliminary determination. If the final determination is affirmative, the ITC will determine before the later of 120 days after the date of this preliminary determination or 45 days after the final determination whether these imports materially injure, or threaten material injury to, the U.S. industry.

Notification to Interested Parties

This determination is issued and published in accordance with sections 733(f) and 777(i)(1) of the Act and 19 CFR 351.205(c).

[8] *See Temporary Rule Modifying AD/CVD Service Requirements Due to COVID–19; Extension of Effective Period,* 85 FR 41363 (July 10, 2020).

[9] *See* Far East Foam's Letter, ''Antidumping Duties on Imports of Mattresses from Malaysia: Request to Extend Final Determination,'' dated October 16, 2020.

Dated: October 27, 2020.

Jeffrey I. Kessler,

Assistant Secretary, for Enforcement and Compliance.

Appendix I

Scope of the Investigation

The products covered by this investigation are all types of youth and adult mattresses. The term ''mattress'' denotes an assembly of materials that at a minimum includes a ''core,'' which provides the main support system of the mattress, and may consist of innersprings, foam, other resilient filling, or a combination of these materials. Mattresses may also contain: (1) ''Upholstery,'' the material between the core and the top panel of the ticking on a single-sided mattress; or between the core and the top and bottom panel of the ticking on a double-sided mattress; and/or (2) ''ticking,'' the outermost layer of fabric or other material (*e.g.,* vinyl) that encloses the core and any upholstery, also known as a cover.

The scope of this investigation is restricted to only ''adult mattresses'' and ''youth mattresses.'' ''Adult mattresses'' are frequently described as ''twin,'' ''extra-long twin,'' ''full,'' ''queen,'' ''king,'' or ''California king'' mattresses. ''Youth mattresses'' are typically described as ''crib,'' ''toddler,'' or ''youth'' mattresses. All adult and youth mattresses are included regardless of size and size description.

The scope encompasses all types of ''innerspring mattresses,'' ''non-innerspring mattresses,'' and ''hybrid mattresses.'' ''Innerspring mattresses'' contain innersprings, a series of metal springs joined together in sizes that correspond to the dimensions of mattresses. Mattresses that contain innersprings are referred to as ''innerspring mattresses'' or ''hybrid mattresses.'' ''Hybrid mattresses'' contain two or more support systems as the core, such as layers of both memory foam and innerspring units.

''Non-innerspring mattresses'' are those that do not contain any innerspring units. They are generally produced from foams (*e.g.,* polyurethane, memory (viscoelastic), latex foam, gel-infused viscoelastic (gel foam), thermobonded polyester, polyethylene) or other resilient filling.

Mattresses covered by the scope of this investigation may be imported independently, as part of furniture or furniture mechanisms (*e.g.,* convertible sofa bed mattresses, sofa bed mattresses imported with sofa bed mechanisms, corner group mattresses, day-bed mattresses, roll-away bed mattresses, high risers, trundle bed mattresses, crib mattresses), or as part of a set in combination with a ''mattress foundation.'' ''Mattress foundations'' are any base or support for a mattress. Mattress foundations are commonly referred to as ''foundations,'' ''boxsprings,'' ''platforms,'' and/or ''bases.'' Bases can be static, foldable, or adjustable. Only the mattress is covered by the scope if imported as part of furniture, with furniture mechanisms, or as part of a set in combination with a mattress foundation.

Excluded from the scope of this investigation are ''futon'' mattresses. A ''futon'' is a bi-fold frame made of wood, metal, or plastic material, or any combination thereof, that functions as both seating furniture (such as a couch, love seat, or sofa) and a bed. A ''futon mattress'' is a tufted mattress, where the top covering is secured to the bottom with thread that goes completely through the mattress from the top through to the bottom, and it does not contain innersprings or foam. A futon mattress is both the bed and seating surface for the futon.

Also excluded from the scope are airbeds (including inflatable mattresses) and waterbeds, which consist of air- or liquid-filled bladders as the core or main support system of the mattress.

Also excluded is certain multifunctional furniture that is convertible from seating to sleeping, regardless of filler material or components, where that filler material or components are upholstered, integrated into the design and construction of, and inseparable from, the furniture framing, and the outermost layer of the multifunctional furniture converts into the sleeping surface. Such furniture may, and without limitation, be commonly referred to as ''convertible sofas,'' ''sofabeds,'' ''sofa chaise sleepers,'' ''futons,'' ''ottoman sleepers'' or a like description.

Also excluded from the scope of this investigation are any products covered by the existing antidumping duty orders on uncovered innerspring units from China or Vietnam. *See Uncovered Innerspring Units from the People's Republic of China: Notice of Antidumping Duty Order,* 74 FR 7661 (February 19, 2009); *Uncovered Innerspring Units from the Socialist Republic of Vietnam,* 73 FR 75391 (December 11, 2008).

Also excluded from the scope of this investigation are bassinet pads with a nominal length of less than 39 inches, a nominal width less than 25 inches, and a nominal depth of less than 2 inches.

Additionally, also excluded from the scope of this investigation are ''mattress toppers.'' A ''mattress topper'' is a removable bedding accessory that supplements a mattress by providing an additional layer that is placed on top of a mattress. Excluded mattress toppers have a height of four inches or less.

The products subject to this investigation are currently properly classifiable under HTSUS subheadings: 9404.21.0010, 9404.21.0013, 9404.29.1005, 9404.29.1013, 9404.29.9085, and 9404.29.9087. Products subject to this investigation may also enter under HTSUS subheadings: 9404.21.0095, 9404.29.1095, 9404.29.9095, 9401.40.0000, and 9401.90.5081. Although the HTSUS subheadings are provided for convenience and customs purposes, the written description of the merchandise subject to this investigation is dispositive.

Appendix II

List of Topics Discussed in the Preliminary Decision Memorandum

I. Summary
II. Background
III. Period of Investigation
IV. Application of Facts Available and Use of Adverse Inference
V. Recommendation

[FR Doc. 2020–24298 Filed 11–2–20; 8:45 am]

BILLING CODE 3510–DS–P

DEPARTMENT OF COMMERCE

International Trade Administration

[A–580–874]

Certain Steel Nails From the Republic of Korea: Preliminary Results of Antidumping Duty Administrative Review and Partial Rescission of Antidumping Duty Administrative Review; 2018–2019

AGENCY: Enforcement and Compliance, International Trade Administration, Department of Commerce.

SUMMARY: The Department of Commerce (Commerce) preliminarily determines that certain steel nails (steel nails) from the Republic of Korea (Korea) were sold in the United States at less than normal value during the period of review (POR) of July 1, 2018 through June 30, 2019.

DATES: Applicable November 3, 2020.

FOR FURTHER INFORMATION CONTACT: Maisha Cryor or Eva Kim, AD/CVD Operations, Office IV, Enforcement and Compliance, International Trade Administration, U.S. Department of Commerce, 1401 Constitution Avenue NW, Washington, DC 20230; telephone: (202) 482–5831 or (202) 482–8283, respectively.

SUPPLEMENTARY INFORMATION:

Background

On July 13, 2015, Commerce published the antidumping duty (AD) *Order* on steel nails from Korea.[1] On July 1, 2019, Commerce notified interested parties of the opportunity to request an administrative review of orders with anniversaries in July 2019.[2] On July 11, 30, and 31, Koram Inc. (Koram), Je-il Wire Production Co., Ltd. (Je-il), Korea Wire Co., Ltd. (Kowire), and Mid Continent Steel & Wire, Inc. (the petitioner), respectively, requested that Commerce conduct an administrative review with respect to 131 companies.[3] On September 9, 2019,

---

[1] *See Certain Steel Nails from the Republic of Korea, Malaysia, the Sultanate of Oman, Taiwan, and the Socialist Republic of Vietnam: Antidumping Duty Orders,* 80 FR 39994 (July 13, 2015) (*Order*).

[2] *See Antidumping or Countervailing Duty Order, Finding, or Suspended Investigation; Opportunity to Request Administrative Review,* 84 FR 31295 (July 1, 2019).

[3] *See* Petitioner's Letter, ''Certain Steel Nails from Korea: Request for Administrative Reviews,'' dated July 31, 2019; *see also* Koram's Letter, ''Certain Steel Nails from the Republic of Korea, Case No. A–580–874: Request for Administrative Review,''

Commerce initiated the AD administrative review of steel nails from Korea for the POR.[4]

On March 18, 2020, Commerce extended the deadline for the preliminary results of this review by 90 days.[5] On April 24 and July 21, 2020, Commerce tolled the deadlines for administrative reviews by an additional 50 and 60 days, respectively.[6] On October 15, 2020, Commerce extended the due date for issuing the preliminary results of this review by 10 days.[7]

Partial Rescission of Administrative Review

Commerce received timely requests to conduct an administrative review of certain exporters covering the POR. On October 2, 2019, the petitioner withdrew its administrative review request with respect to 129 of the 131 companies identified as producers/exporters in the petitioner's July 31, 2019 letter.[8] On October 4 and 10, 2019, Commerce issued the initial AD questionnaires to Daejin Steel Company (Daejin), Je-il, Kowire, and Koram.[9] On October 14, 2019, Koram withdrew its request for review.[10] On October 16, 2019, Je-il withdrew its request for review.[11] Between November 1, 2019 and October 20, 2020, Daejin and Kowire timely responded to Commerce's requests for information.

Because the petitioner timely withdrew its request for review of all of the companies listed in the *Initiation Notice,* with the exception of Daejin and Kowire, and Je-il and Koram timely withdrew their requests for review, we are rescinding this administrative review with respect to the remaining companies on which we initiated a review pursuant to 19 CFR 351.213(d)(1).[12] For a list of the companies for which we are rescinding this review, *see* Appendix II to this notice. Accordingly, the two companies subject to the instant review are Daejin and Kowire.

Scope of the Order

The merchandise covered by this *Order* is steel nails having a nominal shaft length not exceeding 12 inches.[13] Merchandise covered by the *Order* is currently classified under the Harmonized Tariff Schedule of the United States (HTSUS) subheadings 7317.00.55.02, 7317.00.55.03, 7317.00.55.05, 7317.00.55.07, 7317.00.55.08, 7317.00.55.11, 7317.00.55.18, 7317.00.55.19, 7317.00.55.20, 7317.00.55.30, 7317.00.55.40, 7317.00.55.50, 7317.00.55.60, 7317.00.55.70, 7317.00.55.80, 7317.00.55.90, 7317.00.65.30, 7317.00.65.60 and 7317.00.75.00. Nails subject to this *Order* also may be classified under HTSUS subheadings 7907.00.60.00, 8206.00.00.00 or other HTSUS subheadings. While the HTSUS subheadings are provided for convenience and customs purposes, the written description of the scope of this *Order* is dispositive. For a complete description of the scope of the *Order, see* the Preliminary Decision Memorandum.[14]

The Preliminary Decision Memorandum is a public document and is on file electronically via Enforcement and Compliance's Antidumping and Countervailing Duty Centralized Electronic Service System (ACCESS). ACCESS is available to registered users at *http://access.trade.gov.* In addition, a complete version of the Preliminary Decision Memorandum can be accessed directly on the internet at *http://enforcement.trade.gov/frn/.* The signed and electronic versions of the Preliminary Decision Memorandum are identical in content.

Methodology

Commerce is conducting this review in accordance with section 751(a) of the Tariff Act of 1930, as amended (the Act). Export price and constructed export price are calculated in accordance with section 772 of the Act. Normal value is calculated in accordance with section 773 of the Act.

For a full description of the methodology underlying our conclusions, *see* the Preliminary Decision Memorandum. A list of topics included in the Preliminary Decision Memorandum is included as Appendix I to this notice.

Preliminary Results of Review

As a result of this review, we preliminarily determine the following weighted-average dumping margins for the period July 1, 2018 through June 30, 2019:

Exporter/producer	Weighted-average dumping margins (percent)
Daejin Steel Company	1.84
Korea Wire Co., Ltd	7.19

Disclosure and Public Comment

Commerce intends to disclose the calculations used in our analysis to interested parties in this review within five days of the date of publication of this notice in accordance with 19 CFR 351.224(b). Interested parties are invited to comment on the preliminary results of this review. Pursuant to 19 CFR 351.309(c)(1)(ii), interested parties may submit case briefs no later than 30 days after the date of publication of this notice. Rebuttal briefs, limited to issues raised in the case briefs, may be filed no later than seven days after the time limit for filing case briefs.[15]

Note that Commerce has temporarily modified certain of its requirements for serving documents containing business proprietary information, until further notice.[16] Parties who submit case briefs

dated July 11, 2019; Je-il's Letter, ''Certain Steel Nails from the Republic of Korea: Request for Administrative Review for the Period July 1, 2018–June 30, 2019,'' dated July 30, 2019; and Kowire's Letter, ''Steel Nails from the Republic of Korea—Request for Administrative Review,'' dated July 31, 2019.

[4] *See Initiation of Antidumping and Countervailing Duty Administrative Reviews,* 84 FR 47242 (September 9, 2019).

[5] *See* Memorandum, ''Certain Steel Nails from the Republic of Korea: Extension of Deadline for Preliminary Results of Antidumping Duty Administrative Review,'' dated March 18, 2020.

[6] *See* Memorandum, ''Tolling of Deadlines for Antidumping and Countervailing Duty Administrative Reviews in Response to Operational Adjustments Due to COVID–19,'' dated April 24, 2020; *see also* Memorandum, ''Tolling of Deadlines for Antidumping and Countervailing Duty Administrative Reviews,'' dated July 21, 2020.

[7] *See* Memorandum, ''Certain Steel Nails from the Republic of Korea: Extension of Deadline for Preliminary Results of Antidumping Duty Administrative Review,'' dated October 15, 2020.

[8] *See* Petitioner's Letter, ''Certain Steel Nails from Korea: Withdrawal of Requests for Administrative Reviews,'' dated October 2, 2019 (Petitioner's Partial Withdrawal of Request for Review).

[9] *See* Commerce's Letters to Daejin, Kowire, Je-il, and Koram with the AD Questionnaire attached dated October 4, 2019 and October 10, 2019.

[10] *See* Koram's Letter, ''Certain Steel Nails from the Republic of Korea, Case No. A–580–874: Withdrawal of Request for Administrative Review,'' dated October 14, 2019 (Koram's Withdrawal of Review Request).

[11] *See* Je-il's Letter, ''Certain Steel Nails from the Republic of Korea: Withdrawal of Review Request and Request for Rescission,'' dated October 16, 2019. (Je-il's Withdrawal of Review Request).

[12] *See* Petitioner's Partial Withdrawal of Request for Review; Koram's Withdrawal of Review Request; and Je-il's Withdrawal of Review Request.

[13] The shaft length of certain steel nails with flat heads or parallel shoulders under the head shall be measured from under the head or shoulder to the tip of the point. The shaft length of all other certain steel nails shall be measured overall.

[14] *See* Memorandum, ''Decision Memorandum for the Preliminary Results in the Fourth Antidumping Duty Administrative Review of Certain Steel Nails from the Republic of Korea,'' dated concurrently with, and hereby adopted by, this notice (Preliminary Decision Memorandum).

[15] *See* 19 CFR 351.309(d)(1).

[16] *See* 19 CFR 351.303 (for general filing requirements); *see also Temporary Rule Modifying AD/CVD Service Requirements Due to COVID–19,* 85 FR 17006 (March 26, 2020); and *Temporary Rule Modifying AD/CVD Service Requirements Due to*

Continued

or rebuttal briefs in this proceeding are requested to submit with each brief: (1) A statement of the issue, (2) a brief summary of the argument, and (3) a table of authorities.[17] Executive summaries should be limited to five pages total, including footnotes.[18] Case and rebuttal briefs should be filed using ACCESS.[19]

Pursuant to 19 CFR 351.310(c), any interested party may request a hearing within 30 days of the publication of this notice in the **Federal Register**. If a request for a hearing is made, Commerce intends to hold the hearing at a time and date to be determined. Interested parties who wish to request a hearing, or to participate if one is requested, must submit a written request to the Assistant Secretary for Enforcement and Compliance, filed electronically via ACCESS within 30 days after the date of publication of this notice. Requests should contain: (1) The party's name, address, and telephone number; (2) the number of participants; and (3) a list of the issues to be discussed. Issues raised in the hearing will be limited to those raised in the respective case and rebuttal briefs. We intend to issue the final results of this administrative review, including the results of our analysis of issues raised by the parties in the written comments, within 120 days of publication of these preliminary results in the **Federal Register**, unless otherwise extended.[20]

Assessment Rates

Upon completion of the administrative review, Commerce shall determine, and U.S. Customs and Border Protection (CBP) shall assess, antidumping duties on all appropriate entries. Commerce intends to issue assessment instructions to CBP 15 days after the date of publication of the final results of this review.

For any individually examined respondents whose weighted-average dumping margin is above *de minimis* (*i.e.,* 0.50 percent), we will calculate importer-specific *ad valorem* duty assessment rates on the basis of the ratio of the total amount of dumping calculated for an importer's examined sales and the total entered value of such sales, in accordance with 19 CFR 351.212(b)(1).[21] For entries of subject merchandise during the POR produced by each respondent for which it did not know its merchandise was destined for the United States, we will instruct CBP to liquidate such entries at the all-others rate if there is no rate for the intermediate company(ies) involved in the transaction.[22] Where either the respondent's weighted-average dumping margin is zero or *de minimis,* or an importer-specific assessment rate is zero or *de minimis,* we will instruct CBP to liquidate the appropriate entries without regard to antidumping duties.

Commerce intends to issue appropriate assessment instructions directly to CBP 15 days after publication of this notice. The final results of this review shall be the basis for the assessment of antidumping duties on entries of merchandise covered by the final results of this review and for future deposits of estimated duties, where applicable.

Cash Deposit Requirement

The following cash deposit requirements will be effective upon publication of the notice of the final results of administrative review for all shipments of nails from Korea entered, or withdrawn from warehouse, for consumption on or after the date of publication of the final results of this administrative review, as provided by section 751(a)(2)(C) of the Act: (1) The cash deposit rate for the companies under review will be the rate established in the final results of this review (except, if the rate is zero or *de minimis*); (2) for merchandise exported by manufacturers or exporters not covered in this review but covered in a prior segment of the proceeding, the cash deposit rate will continue to be the company-specific rate published for the most recently completed segment of this proceeding in which the manufacturer or exporter participated; (3) if the exporter is not a firm covered in this review, a prior review, or the less-than-fair-value investigation, but the manufacturer is, then the cash deposit rate will be the rate established for the most recently completed segment of the proceeding for the manufacturer of the merchandise; and (4) the cash deposit rate for all other manufacturers or exporters will continue to be 11.80 percent *ad valorem,* the all-others rate established in the less-than-fair value investigation.[23]

Notification to Importers

This notice also serves as a preliminary reminder to importers of their responsibility under 19 CFR 351.402(f) to file a certificate regarding the reimbursement of antidumping duties prior to liquidation of the relevant entries during this review period. Failure to comply with this requirement could result in Commerce's presumption that reimbursement of antidumping duties occurred and the subsequent assessment of double antidumping duties.

Notification to Interested Parties

These preliminary results of administrative review are issued and published in accordance with sections 751(a)(1) and 777(i)(1) of the Act, and 19 CFR 351.213(h)(1).

Dated: October 28, 2020.

Jeffrey I. Kessler,

Assistant Secretary for Enforcement and Compliance.

Appendix I

List of Topics Discussed in the Preliminary Decision Memorandum

I. Summary
II. Background
III. Scope of the Order
IV. Rescission of Review, In Part
V. Discussion of the Methodology
VI. Recommendation

Appendix II

List of Companies for Which Commerce Is Rescinding This Review

AAA Line International (China).
Ansing Rich Tech & Trade Co. Ltd.
Astrotech Steels Private Limited.
Baoding Jimaotong Imp. & Exp. . Co., Ltd.
Beijing Catic Industry Ltd.
Beijing Jin Heung Co. Ltd.
Big Mind Group Co, Ltd.
Bonuts Hardware Logistics.
Cheng Ch International Co Ltd.
Chiapao Metal Co., Ltd.
China Staple Enterprise Co. Ltd.
Dezhou Xinjiayuan Hardware Products Co., Ltd.
Dezhou Hualude Hardware Products Co., Ltd.
Dong Yang Diecasting Co., Ltd.
Double-Moon Hardware Products Co., Ltd.
Duo-Fast Korea Co., Ltd.
Duo-Fast Co., Ltd.
ECI Taiwan Co., Ltd.
Eco Steel Co., Ltd.
Eco-Friendly Floor Ltd.
Ejem Brothers Limited.
Empac International Ltd.
Fastgrow International Co.
FASTCO (Shanghai) Trading Co., Ltd.
GD.CP International Co. Ltd.

COVID–19; Extension of Effective Period, 85 FR 41363 (July 10, 2020).

[17] *See* 19 CFR 351.309(c)(2) and (d)(2).

[18] *Id.*

[19] *See* 19 CFR 351.303.

[20] *See* section 751(a)(3)(A) of the Act.

[21] In these preliminary results, Commerce applied the assessment rate calculation methodology adopted in *Antidumping Proceedings: Calculation of the Weighted-Average Dumping Margin and Assessment Rate in Certain Antidumping Proceedings: Final Modification,* 77 FR 8101 (February 14, 2012).

[22] *See Antidumping and Countervailing Duty Proceedings: Assessment of Antidumping Duties,* 68 FR 23954 (May 6, 2003).

[23] *See Certain Steel Nails from the Republic of Korea: Final Determination of Sales at Less Than Fair Value,* 80 FR 28955 (May 20, 2015).

Gdcp Richmax International Ltd.
Geekay Wires Limited.
Geekay Wires Ltd.
Grace International Co Ltd.
GWP Industries (Tianjin) Co., Ltd.
Hai Sheng Xin Group Co., Ltd
Hanbit Logistics Co., Ltd.
Hanmi Staple Co., Ltd.
Hebei Minmetals Co., Ltd.
Hebei Cangzhou New Century Foreign Trade Co., Ltd.
Hebei Jinsidun Trade Co. Ltd.
Hebei Minghao Import Export Co Li.
Hengtuo Metal Products Co Ltd.
Hong Kong Neos Technology Co.
Hongkong Shengshi Metal Products Co Ltd.
Hongyi Hardware Products Co., Ltd.
Hoyi Plus Co Ltd.
Inmax Industries Sdn. Bhd.
Inmax Sdn. Bhd.
JCD Group Co., Limited.
JCD Group Co., Ltd.
Je-il Wire Production Co., Ltd.
Jeil Tacker Co. Ltd.
Jinhai Hardware Co., Ltd.
Jinheung Steel Corporation.
Jinsco International Corp.
Koram Inc.
Koram Steel Co., Ltd.
Leling Taishan Artificial Turf Industry.
Liang Chyuan Industrial Co., Limited.
Liang Chyuan Ind. Co., Lmt.
Liaocheng Minghui Hardware Products.
Linyi Double-Moon Hardware Products Co., Ltd.
Linyi Flying Arrow Imp. & Exp. Ltd.
Max Co., Ltd.
M & M Industries Co., Ltd.
Macropower Industrial Inc.
Mingguang Ruifeng Hardware Products Co., Ltd.
Modern Factory for Metal Products.
MPROVE Co., Limited.
Nielsen Bainbridge LLC.
Nailtech Co. Ltd.
Nailtech Co., Limited.
Neo Gls.
Paslode Co., Ltd.
Peace Industries, Ltd.
Promising Way (Hong Kong) Limited.
Pro-Team Coil Nail Enterprise Inc.
Qingdao Ant Hardware Manufacturing Co., Ltd.
Qingdao Ant Hardware Manufacturing Co., Limited.
Qingdao Cheshire Trading Co. Ltd.
Qingdao D&L Group Ltd.
Qingdao D&O Houseware Co. Ltd.
Qingdao D&O Houseware Co. Limited.
Qingdao Hongyuan Nail Industry Co. Ltd.
Qingdao JCD Machinery Co., Ltd.
Qingdao Jisco Co., Ltd.
Qingdao Meijialucky Industry and Commerce Co., Ltd.
Qingdao Mst Industry and Commerce Co., Ltd.
Qingdao Sunrise Metal Products Co. Ltd.
Qingdao TianHeng Xiang metal Products Co., Ltd
Qingdao Tiger Hardware Co., Ltd.
Qingdao Yutong Concrete Hardware Co., Ltd.
Quick Advance Inc.
Region Industries Co., Ltd.
Sam Un Co. Ltd.
Shandong Oriental Cherry Hardware Import & Export Co., Ltd.
Shandong Oriental Cherry Hardware Group Co. Ltd.
Shandong Qingyun Hongyi Hardware Products Co., Ltd.
Shanghai Shenda Imp. & Exp. Co., Ltd.
Shanghai Zoonlion Industrial Co., Ltd.
Shanghai Zoonlion Industrial Co., Limited.
Shanxi Fasteners & Hardware Products Co., Ltd.
Shanxi Pioneer Hardware Industry Co., Ltd.
Shanxi Tianli Industries Co., Ltd.
Shenzhen Jie Ding Sheng Trading Co., Ltd.
Sherilee Co Ltd.
Smile Industries Ltd.
Suntec Industries Co., Ltd.
Theps Co., Ltd.
Tianjin Coways Metal Products Co.
Tianjin Hongli Qiangsheng Imp. & Exp.
Tianjin Hweschun Fasteners Manufacturing Co. Ltd.
Tianjin Jinchi Metal Products Co., Ltd.
Tianjin Jinghai County Hongli Industry and Business.
Tianjin International Trade Co. Ltd.
Tianjin Lituo Imp&Exp Co., Ltd.
Tianjin Liweitian Metal Technology.
Tianjin Zhonglian Metals Ware Co. Ltd.
Tianjin Zhonglian Times Technology.
Unicorn (Tianjin) Fasteners Co., Ltd.
United Company for Metal Products.
Weifang Wenhe Pneumatic Tools Co., Ltd.
Wulian Zhanpeng Metals Co., Ltd.
Xi'an Metals and Minerals Imp. Exp. Co., Ltd.
Xinjiayuan International Trade Co.
Youngwoo Fasteners Co., Ltd.
Youngwoo (Cangzhou) Fasteners Co., Ltd.
You-One Fastening Systems.
Zhaoqing Harvest Nails Co. Ltd.
Zhanghaiding Hardware Co., Ltd.
Zhejiang Best Nail Industrial Co., Ltd.
Zon Mon Co Ltd.

[FR Doc. 2020–24318 Filed 11–2–20; 8:45 am]

BILLING CODE 3510–DS–P

DEPARTMENT OF COMMERCE

International Trade Administration

[C–570–978]

High Pressure Steel Cylinders From the People's Republic of China; Rescission of Countervailing Duty Administrative Review; 2019

AGENCY: Enforcement and Compliance, International Trade Administration, Department of Commerce.

SUMMARY: The Department of Commerce (Commerce) is rescinding the administrative review of the countervailing duty (CVD) order on high pressure steel cylinders from the People's Republic of China for the period of review (POR) January 1, 2019 through December 31, 2019, based on the timely withdrawal of the requests for review.

DATES: Applicable November 3, 2020.

FOR FURTHER INFORMATION CONTACT: Theodore Pearson, AD/CVD Operations, Office I, Enforcement and Compliance, International Trade Administration, U.S. Department of Commerce, 1401 Constitution Avenue NW, Washington, DC 20230; telephone: (202) 482–2631.

SUPPLEMENTARY INFORMATION:

Background

On June 2, 2020, Commerce published a notice of opportunity to request an administrative review of the CVD order on high pressure steel cylinders from Italy for the POR January 1, 2019 through December 31, 2019.[1] Commerce received timely-filed requests for an administrative review from Norris Cylinder Company (the petitioner)[2] and Beijing Tianhai Industry Co. Ltd., Tianjin Tianhai High Pressure Container Co., Ltd., and Langfang Tianhai High Pressure Container Co., Ltd. (collectively, BTIC),[3] in accordance with section 751(a) of the Tariff Act of 1930, as amended (the Act), and 19 CFR 351.213(b). Commerce received no other requests for administrative review.

On August 6, 2020, pursuant to these requests and in accordance with 19 CFR 351.221(c)(1)(i), Commerce published a notice initiating an administrative review of the CVD order on high pressure steel cylinders from China.[4] On October 19, 2020, the petitioner and BTIC withdrew their requests for an administrative review of all companies for which they had requested a review.[5]

Rescission of Review

Pursuant to 19 CFR 351.213(d)(1), Commerce will rescind an administrative review, in whole or in part, if the party or parties that requested a review withdraws the request within 90 days of the publication date of the notice of initiation of the requested review. As noted above, the petitioner and BTIC withdrew their requests for review of all

[1] *See Antidumping or Countervailing Duty Order, Finding, or Suspended Investigation; Opportunity to Request Administrative Review,* 85 FR 33628 (July 1, 2019).

[2] *See* Petitioner's Letter, ''High Pressure Steel Cylinders from the People's Republic of China; Request for Administrative Review,'' dated June 24, 2020.

[3] *See* BTIC's Letter, ''Request for the Eighth Administrative Review of the Countervailing Duty Order on High Pressure Steel Cylinders from the People's Republic of China, C–570–978 (POR: 01/01/19–12/31/19),'' dated June 30, 2020.

[4] *See Initiation of Antidumping and Countervailing Duty Administrative Reviews,* 85 FR 47731 (August 6, 2020).

[5] *See* Petitioner's Letter, ''High Pressure Steel Cylinders from the People's Republic of China; Withdrawal of Request for Administrative Review,'' dated October 19, 2020; *see also* BTIC's Letter, ''Withdrawal of Review Request in the Eighth Administrative Review of Countervailing Duty Order on High Pressure Steel Cylinders from the People's Republic of China,'' dated October 19, 2020.

companies within 90 days of the publication date of the notice of initiation. No other parties requested an administrative review of the order. Therefore, in accordance with 19 CFR 351.213(d)(1), we are rescinding the administrative review of the CVD order on high pressure steel cylinders from China covering January 1, 2019 through December 31, 2019, in its entirety.

Assessment

Commerce intends to instruct U.S. Customs and Border Protection (CBP) to assess countervailing duties on all appropriate entries of high pressure steel cylinders from China during the POR. Countervailing duties shall be assessed at rates equal to the cash deposit of estimated countervailing duties required at the time of entry, or withdrawal from warehouse, for consumption in accordance with 19 CFR 351.212(c)(1)(i). Commerce intends to issue appropriate assessment instructions to CBP 15 days after the date of publication of this notice in the **Federal Register**.

Notification Regarding Administrative Protective Orders

This notice serves as a reminder to all parties subject to administrative protective order (APO) of their responsibility concerning the disposition of proprietary information disclosed under APO in accordance with 19 CFR 351.305(a)(3). Timely written notification of the return/destruction of APO materials or conversion to judicial protective order is hereby requested. Failure to comply with the regulations and terms of an APO is a violation which is subject to sanction.

Notification to Interested Parties

This notice is issued and published in accordance with sections 751(a)(1) and 777(i)(1) of the Act, and 19 CFR 351.213(d)(4).

Dated: October 28, 2020.

James Maeder,

Deputy Assistant Secretary for Antidumping and Countervailing Duty Operations.

[FR Doc. 2020–24319 Filed 11–2–20; 8:45 am]

BILLING CODE 3510–DS–P

DEPARTMENT OF COMMERCE

International Trade Administration

[A–428–850, A–588–880, A–580–911, A–469–824]

Thermal Paper From Germany, Japan, the Republic of Korea, and Spain: Initiation of Less-Than-Fair-Value Investigations

AGENCY: Enforcement and Compliance, International Trade Administration, Department of Commerce.

DATES: Applicable October 27, 2020.

FOR FURTHER INFORMATION CONTACT: David Goldberger at (202) 482–4136 (Germany); Brittany Bauer at (202) 482–3860 (Japan); and Lilit Astvatsatrian at (202) 482–6412 (the Republic of Korea (Korea) and Spain); AD/CVD Operations, Enforcement and Compliance, International Trade Administration, U.S. Department of Commerce, 1401 Constitution Avenue NW, Washington, DC 20230.

SUPPLEMENTARY INFORMATION:

The Petitions

On October 7, 2020, the Department of Commerce (Commerce) received antidumping duty (AD) petitions concerning imports of thermal paper from Germany, Japan, Korea, and Spain filed in proper form on behalf of Appvion Operations, Inc. (Appvion) and Domtar Corporation (Domtar) (collectively, the petitioners), domestic producers of thermal paper.[1]

On October 13 and 20, 2020, Commerce requested supplemental information pertaining to certain aspects of the Petitions in separate supplemental questionnaires.[2] The petitioners filed responses to the supplemental questionnaires on October 16, 2020,[3] and October 21, 2020.[4]

In accordance with section 732(b) of the Tariff Act of 1930, as amended (the Act), the petitioners allege that imports of thermal paper from Germany, Japan, Korea, and Spain are being, or are likely to be, sold in the United States at less than fair value (LTFV) within the meaning of section 731 of the Act, and that imports of such products are materially injuring, or threatening material injury to, the thermal paper industry in the United States. Consistent with section 732(b)(1) of the Act, the Petitions are accompanied by information reasonably available to the petitioners supporting their allegations.

Commerce finds that the petitioners filed the Petitions on behalf of the domestic industry, because the petitioners are interested parties, as defined in section 771(9)(C) of the Act. Commerce also finds that the petitioners demonstrated sufficient industry support for the initiation of the requested LTFV investigations.[5]

Periods of Investigation

Because the Petitions were filed on October 7, 2020, the period of investigation (POI) for these LTFV investigations is October 1, 2019, through September 30, 2020, pursuant to 19 CFR 351.204(b)(1).[6]

Scope of the Investigations

The product covered by these investigations is thermal paper from Germany, Japan, Korea, and Spain. For a full description of the scope of these investigations, *see* the appendix to this notice.

Comments on the Scope of the Investigations

On October 13 and 14, 2020, Commerce requested information from the petitioners regarding the proposed scope to ensure that the scope language in the Petitions is an accurate reflection of the products for which the domestic industry is seeking relief.[7] On October

[1] *See* Petitioners' Letter, ''Petitions for the Imposition of Antidumping Duties on Imports of Thermal Paper from Germany, Japan, Korea, and Spain,'' dated October 7, 2020 (the Petitions).

[2] *See* Commerce's Letter, ''Petitions for the Imposition of Antidumping Duties on Imports of Thermal Paper from Germany, Japan, the Republic of Korea, and Spain: Supplemental Questions,'' dated October 13, 2020 (General Issues Supplemental); *see also* country-specific supplemental questionnaires for Germany, Japan, Korea, and Spain, ''Petition for the Imposition of Antidumping Duties on Imports of Thermal Paper from Germany: Supplemental Questions'' (Germany AD Supplement), ''Petition for the Imposition of Antidumping Duties on Thermal Paper from Japan: Supplemental Questions'' (Japan AD Supplement), ''Petition for the Imposition of Antidumping Duties on Thermal Paper from Korea: Supplemental Questions'' (Korea AD Supplement), and ''Petition for the Imposition of Antidumping Duties on Thermal Paper from Spain: Supplemental Questions'' (Spain AD Supplement), dated October 13, 2020; and Memorandum, ''Phone Call with Counsel to the Petitioners,'' dated October 20, 2020.

[3] *See* Petitioners' Letter, ''Response of the Petitioners to Volumes I–V Supplemental Questionnaires: Thermal Paper from Germany, Japan, Korea, and Spain'' dated October 16, 2020 (the Volume I response is hereinafter referred to as the General Issues Supplement).

[4] *See* Petitioners' Letter, ''Response of Petitioners to Volumes II and IV Second Supplemental Questionnaires: Thermal Paper from Germany and Korea,'' dated October 21, 2020.

[5] *See infra,* section on ''Determination of Industry Support for the Petitions.''

[6] *See* 19 CFR 351.204(b)(1).

[7] *See* General Issues Supplemental; *see also* Memorandum, ''Petitions for the Imposition of Antidumping Duties on Imports of Thermal Paper from Germany, Japan, the Republic of Korea, and Spain: Phone Call with Counsel to the Petitioners,'' dated October 14, 2020.

16 20, 2020, the petitioners revised the scope.[8] The description of merchandise covered by these investigations, as described in the appendix to this notice, reflects these clarifications.

As discussed in the *Preamble* to Commerce's regulations, we are setting aside a period for interested parties to raise issues regarding product coverage (*i.e.,* scope).[9] Commerce will consider all comments received from interested parties and, if necessary, will consult with interested parties prior to the issuance of the preliminary determinations. If scope comments include factual information,[10] all such factual information should be limited to public information. To facilitate preparation of its questionnaires, Commerce requests that all interested parties submit such comments by 5:00 p.m. Eastern Time (ET) on November 16, 2020, which is 20 calendar days from the signature date of this notice. Any rebuttal comments, which may include factual information, must be filed by 5:00 p.m. ET on November 27, 2020, which is the next business day after ten calendar days from the initial comment deadline.

Commerce requests that any factual information that parties consider relevant to the scope of these investigations be submitted during this period. However, if a party subsequently finds that additional factual information pertaining to the scope of these investigations may be relevant, the party may contact Commerce and request permission to submit the additional information. All such submissions must be filed on the records of each of the concurrent LTFV investigations.

Filing Requirements

All submissions to Commerce must be filed electronically via Enforcement and Compliance's Antidumping Duty and Countervailing Duty Centralized Electronic Service System (ACCESS), unless an exception applies.[11] An electronically filed document must be received successfully in its entirety by the time and date on which it is due.

Comments on Product Characteristics

Commerce is providing interested parties an opportunity to comment on the appropriate physical characteristics of thermal paper to be reported in response to Commerce's AD questionnaires. This information will be used to identify the key physical characteristics of the subject merchandise in order to report the relevant costs of production accurately, as well as to develop appropriate product-comparison criteria.

Interested parties may provide any information or comments that they feel are relevant to the development of an accurate list of physical characteristics. Specifically, they may provide comments as to which characteristics are appropriate to use as: (1) General product characteristics; and (2) product comparison criteria. We note that it is not always appropriate to use all product characteristics as product comparison criteria. We base product comparison criteria on meaningful commercial differences among products. In other words, although there may be some physical product characteristics utilized by manufacturers to describe thermal paper it may be that only a select few product characteristics take into account commercially meaningful physical characteristics. In addition, interested parties may comment on the order in which the physical characteristics should be used in matching products. Generally, Commerce attempts to list the most important physical characteristics first and the least important characteristics last.

In order to consider the suggestions of interested parties in developing and issuing the AD questionnaires, all product characteristics comments must be filed by 5:00 p.m. ET on November 16, 2020, which is 20 calendar days from the signature date of this notice. Any rebuttal comments must be filed by 5:00 p.m. ET on November 27, 2020. All comments and submissions to Commerce must be filed electronically using ACCESS, as explained above, on the record of each of the LTFV investigations.

Determination of Industry Support for the Petitions

Section 732(b)(1) of the Act requires that a petition be filed on behalf of the domestic industry. Section 732(c)(4)(A) of the Act provides that a petition meets this requirement if the domestic producers or workers who support the petition account for: (i) At least 25 percent of the total production of the domestic like product; and (ii) more than 50 percent of the production of the domestic like product produced by that portion of the industry expressing support for, or opposition to, the petition. Moreover, section 732(c)(4)(D) of the Act provides that, if the petition does not establish support of domestic producers or workers accounting for more than 50 percent of the total production of the domestic like product, Commerce shall: (i) Poll the industry or rely on other information in order to determine if there is support for the petition, as required by subparagraph (A); or (ii) determine industry support using a statistically valid sampling method to poll the ''industry.''

Section 771(4)(A) of the Act defines the ''industry'' as the producers as a whole of a domestic like product. Thus, to determine whether a petition has the requisite industry support, the statute directs Commerce to look to producers and workers who produce the domestic like product. The International Trade Commission (ITC), which is responsible for determining whether ''the domestic industry'' has been injured, must also determine what constitutes a domestic like product in order to define the industry. While both Commerce and the ITC must apply the same statutory definition regarding the domestic like product,[12] they do so for different purposes and pursuant to a separate and distinct authority. In addition, Commerce's determination is subject to limitations of time and information. Although this may result in different definitions of the like product, such differences do not render the decision of either agency contrary to law.[13]

Section 771(10) of the Act defines the domestic like product as ''a product which is like, or in the absence of like, most similar in characteristics and uses with, the article subject to an investigation under this title.'' Thus, the reference point from which the domestic like product analysis begins is ''the article subject to an investigation'' (*i.e.,* the class or kind of merchandise to be investigated, which normally will be the scope as defined in the petition).

With regard to the domestic like product, the petitioners do not offer a

[8] *See* General Issues Supplement at Exhibit Supp I–2; *see also* Petitioners' Letter, ''Thermal paper from Germany: Response to Koehler's Pre-Initiation Comments on Industry Support and Request for Polling,'' dated October 20, 2020 (Petitioners Letter I) at 19 and Exhibit IS–11.

[9] *See Antidumping Duties; Countervailing Duties, Final Rule,* 62 FR 27296, 27323 (May 19, 1997) (*Preamble*).

[10] *See* 19 CFR 351.102(b)(21) (defining ''factual information'').

[11] *See Antidumping and Countervailing Duty Proceedings: Electronic Filing Procedures; Administrative Protective Order Procedures,* 76 FR 39263 (July 6, 2011); *see also Enforcement and Compliance; Change of Electronic Filing System Name,* 79 FR 69046 (November 20, 2014) for details of Commerce's electronic filing requirements, effective August 5, 2011. Information on help using ACCESS can be found at *https://access.trade.gov/help.aspx* and a handbook can be found at *https://access.trade.gov/help/Handbook_on_Electronic_Filing_Procedures.pdf.*

[12] *See* section 771(10) of the Act.

[13] *See USEC, Inc.* v. *United States,* 132 F. Supp. 2d 1, 8 (CIT 2001) (citing *Algoma Steel Corp., Ltd.* v. *United States,* 688 F. Supp. 639, 644 (CIT 1988), *aff'd* 865 F. 2d 240 (Fed. Cir. 1989)).

definition of the domestic like product distinct from the scope of the investigations.[14] Based on our analysis of the information submitted on the record, we have determined that thermal paper, as defined in the scope, constitutes a single domestic like product, and we have analyzed industry support in terms of that domestic like product.[15]

In determining whether the petitioners have standing under section 732(c)(4)(A) of the Act, we considered the industry support data contained in the Petitions with reference to the domestic like product as defined in the ''Scope of the Investigations,'' in the appendix to this notice. The petitioners provided letters of support from Kanzaki Specialty Papers Inc. (Kanzaki), a U.S. producer of thermal paper, and from the United Steel, Paper and Forestry, Rubber, Manufacturing, Energy, Allied Industrial, and Service Workers International Union, which represents workers at Domtar's facility in West Carrollton, OH, Appvion's facility in Appleton, WI, and Kanzaki's facility in Ware, MA.[16] To establish industry support, the petitioners employed two methodologies—one based on production quantity, the other based on value-added. Under the quantity-based method, the petitioners provided their own 2019 production quantity of jumbo rolls, as well as the production quantity for Kanzaki, and compared this to the sum of the estimated total quantity of jumbo rolls produced in the United States and the estimated quantity of converted rolls produced in the United States from imported jumbo rolls in 2019.[17] Under the value-added method, the petitioners provided their own 2019 total sales value of jumbo rolls, as well as the sales value for Kanzaki, and compared this to the sum of the estimated total value of jumbo rolls produced in the United States and the estimated total value added by U.S. converters of jumbo rolls in 2019.[18] We relied on data provided by the petitioners for purposes of measuring industry support.[19]

On October 16, 2020, we received comments on industry support from Papierfabrik August Koehler SE (Koehler), a German producer of thermal paper.[20] On October 20, 2020, the petitioners responded to Koehler's industry support comments.[21]

Our review of the data provided in the Petitions, the General Issues Supplement, the Petitioners Letter I, and other information readily available to Commerce indicates that the petitioners have established industry support for the Petitions.[22] First, the Petitions established support from domestic producers (or workers) accounting for more than 50 percent of the total production (by quantity or U.S. sales value) of the domestic like product and, as such, Commerce is not required to take further action in order to evaluate industry support (*e.g.,* polling).[23] Second, the domestic producers (or workers) have met the statutory criteria for industry support under section 732(c)(4)(A)(i) of the Act because the domestic producers (or workers) who support the Petitions account for at least 25 percent of the total production (by quantity or U.S. sales value) of the domestic like product.[24] Finally, the domestic producers (or workers) have met the statutory criteria for industry support under section 732(c)(4)(A)(ii) of the Act because the domestic producers (or workers) who support the Petitions account for more than 50 percent of the production (by quantity or U.S. sales value) of the domestic like product produced by that portion of the industry expressing support for, or opposition to, the Petitions.[25] Accordingly, Commerce determines that the Petitions were filed on behalf of the domestic industry within the meaning of section 732(b)(1) of the Act.[26]

Allegations and Evidence of Material Injury and Causation

The petitioners allege that the U.S. industry producing the domestic like product is being materially injured, or is threatened with material injury, by reason of the imports of the subject merchandise sold at LTFV. In addition, the petitioners allege that subject imports exceed the negligibility threshold provided for under section 771(24)(A) of the Act.[27]

The petitioners contend that the industry's injured condition is illustrated by a significant and increasing volume and market share of subject imports; underselling and price depression or suppression; lost sales and revenues, adverse impact on capacity, capacity utilization, and financial performance; and declines in production, U.S. shipments, and employment variables.[28] We assessed the allegations and supporting evidence regarding material injury, threat of material injury, causation, as well as negligibility, and we have determined that these allegations are properly supported by adequate evidence, and meet the statutory requirements for initiation.[29]

Allegations of Sales at LTFV

The following is a description of the allegations of sales at LTFV upon which Commerce based its decision to initiate these LTFV investigations of imports of thermal paper from Germany, Japan, Korea, and Spain. The sources of data for the deductions and adjustments relating to U.S. price and normal value (NV) are discussed in greater detail in the country-specific AD Initiation Checklists.

U.S. Price

For Germany, Japan, Korea, and Spain, the petitioners based the export price (EP) on pricing information for sales of, or sales offers for, thermal paper produced in and exported from each country. The petitioners made certain adjustments to U.S. price to calculate a net ex-factory U.S. price.[30]

[14] *See* Volume I of the Petitions at 15–18; *see also* General Issues Supplement at 1 and Exhibit Supp. I–1.

[15] For a discussion of the domestic like product analysis as applied to these cases and information regarding industry support, *see* country-specific AD Initiation Checklists at Attachment II, Analysis of Industry Support for the Antidumping Duty Petitions Covering Thermal Paper from Germany, Japan, the Republic of Korea, and Spain (Attachment II). These checklists are dated concurrently with, and hereby adopted by, this notice and on file electronically via ACCESS.

[16] *See* Volume I of the Petitions at 2, 5 and Exhibits I–5 and I–24; *see also* General Issues Supplement at 4 and Exhibit Supp. I–5.

[17] *See* Volume I of the Petitions at 3–5 and Exhibits I–1, I–2, and I–4; *see also* General Issues Supplement at 3–5 and Exhibits Supp. I–5, Revised Exhibit I–1B and Revised Exhibit I–1C.

[18] *See* Volume I of the Petitions at 3–5 and Exhibits I–1, I–2, and I–4; *see also* General Issues Supplement 3–5 and Exhibits Supp. I–4, Supp. I–5, Revised Exhibit I–1B, and Revised Exhibit I–1C.

[19] *See* Volume I of the Petitions at 3–5 and Exhibits I–1, I–2, and I–4; *see also* General Issues Supplement 3–5 and Exhibits I–4, I–5, Revised Exhibit I–1B, and Revised Exhibit I–1C; and country-specific AD Initiation Checklists at Attachment II.

[20] *See* Koehler's Letter, ''Thermal Paper from Germany: Koehler's Pre-Initiation Comments on Industry Support and Request for Polling,'' dated October 16, 2020.

[21] *See* Petitioners' Letter I.

[22] *See* country-specific AD Initiation Checklists at Attachment II.

[23] *Id.; see also* section 732(c)(4)(D) of the Act.

[24] *See* country-specific AD Initiation Checklists at Attachment II.

[25] *Id.*

[26] *Id.*

[27] *See* Volume I of the Petitions at 21 and Exhibit I–16.

[28] *Id.* at 19–31 and Exhibits I–16 through I–23; *see also* General Issues Supplement at 6 and Exhibits Supp. I–6 through Supp. I–8.

[29] *See* country-specific AD Initiation Checklists at Attachment III, Analysis of Allegations and Evidence of Material Injury and Causation for the Antidumping Duty Petitions Covering Thermal Paper from Germany, Japan, the Republic of Korea, and Spain (Attachment III).

[30] *See* country-specific AD Initiation Checklists.

Normal Value [31]

For Germany and Spain, the petitioners based NV on a home market price quote for thermal paper produced in and sold, or offered for sale, in each country within the applicable time period.[32] For Germany, the information provided by the petitioners indicates that the home market price quoted is below the COP; therefore, the petitioners also calculated NV based on constructed value (CV).[33] For Japan and Korea, the petitioners stated they were unable to obtain home market or third country prices to use as a basis for NV and, therefore, the petitioners calculated NV based on CV.[34] For further discussion of CV, *see* the section ''Normal Value Based on Constructed Value.''

Normal Value Based on Constructed Value

As noted above, the information provided by the petitioners indicates that the price charged for thermal paper produced in and sold, or offered for sale, in Germany was below the COP. Accordingly, the petitioners also based NV for Germany on CV.[35] Additionally, for Japan and Korea, the petitioners were unable to obtain home market or third country prices and, therefore, based NV for Japan and Korea on CV.[36] Pursuant to section 773(e) of the Act, the petitioners calculated CV as the sum of the cost of manufacturing, selling, general, and administrative expenses, financial expenses, and profit.[37]

Fair Value Comparisons

Based on the data provided by the petitioners, there is reason to believe that imports of thermal paper from Germany, Japan, Korea, and Spain are being, or are likely to be, sold in the United States at LTFV. Based on comparisons of EP to NV or CV in accordance with sections 772 and 773 of the Act, the estimated dumping margins for thermal paper for each of the countries covered by this initiation are as follows: (1) Germany—9.20 to 58.90 percent; (2) Korea—56.60 to 58.24 percent; (3) Japan—129.86 to 140.25 percent; and (4) Spain—32.68 to 41.45.[38]

Initiation of LTFV Investigations

Based upon our examination of the Petitions and supplemental responses, we find that they meet the requirements of section 732 of the Act. Therefore, we are initiating these LTFV investigations to determine whether imports of thermal paper from the Germany, Japan, Korea, and Spain are being, or are likely to be, sold in the United States at LTFV. In accordance with section 733(b)(1)(A) of the Act and 19 CFR 351.205(b)(1), unless postponed, we will make our preliminary determinations no later than 140 days after the date of this initiation.

Respondent Selection

In the Petitions, the petitioners named three companies in Germany, three companies in Japan, and four companies in Korea as producers and/or exporters of thermal paper.[39]

Following standard practice in LTFV investigations involving market economy countries, in the event Commerce determines that the number of exporters or producers in any individual case is large such that Commerce cannot individually examine each company based upon its resources, where appropriate, Commerce intends to select mandatory respondents in that case based on U.S. Customs and Border Protection (CBP) data for U.S. imports under the appropriate Harmonized Tariff Schedule of the United States numbers listed in the ''Scope of the Investigations,'' in the appendix.

On October 20, October 21, and 23, 2020, Commerce released CBP data on imports of thermal paper from Korea, Germany, and Japan under Administrative Protective Order (APO) to all parties with access to information protected by APO and indicated that interested parties wishing to comment on the CBP data must do so within three business days of the publication date of the notice of initiation of these investigations.[40] Commerce will not accept rebuttal comments regarding the CBP data or respondent selection.

Interested parties must submit applications for disclosure under APO in accordance with 19 CFR 351.305(b). Instructions for filing such applications may be found on Commerce's website at *https://enforcement.trade.gov/apo.*

In the Petitions, the petitioners identified one company in Spain as a producer and/or exporter of thermal paper (*i.e.,* Torraspapel, S.A.), and provided independent third-party information as support for the existence of only one producer/exporter in Spain.[41] We currently know of no additional producers or exporters of thermal paper from Spain. Accordingly, Commerce intends to individually examine all known producers and exporters in the investigation of thermal paper from Spain (*i.e.,* Torraspapel, S.A.).

Parties wishing to comment on respondent selection for Spain must do so within three business days of the publication of this notice in the **Federal Register**. Commerce will not accept rebuttal comments regarding respondent selection for Spain.

Comments on CBP data and respondent selection must be filed electronically using ACCESS. An electronically-filed document must be received successfully in its entirety via ACCESS by 5:00 p.m. ET on the specified deadline.

Distribution of Copies of the AD Petitions

In accordance with section 732(b)(3)(A) of the Act and 19 CFR 351.202(f), copies of the public version of the AD Petitions have been provided to the governments of Germany, Japan, Korea, and Spain via ACCESS. To the extent practicable, we will attempt to provide a copy of the public version of the AD Petitions to each exporter named in the AD Petitions, as provided under 19 CFR 351.203(c)(2).

ITC Notification

We will notify the ITC of our initiation, as required by section 732(d) of the Act.

Preliminary Determinations by the ITC

The ITC will preliminarily determine, within 45 days after the date on which the AD Petitions were filed, whether there is a reasonable indication that imports of thermal paper from Germany, Japan, Korea, and/or Spain are materially injuring, or threatening

[31] In accordance with section 773(b)(2) of the Act, for these investigations, Commerce will request information necessary to calculate the constructed value and cost of production (COP) to determine whether there are reasonable grounds to believe or suspect that sales of the foreign like product have been made at prices that represent less than the COP of the product.

[32] *See* country-specific AD Initiation Checklists.

[33] *See* Germany AD Initiation Checklist.

[34] *See* Korea AD Initiation Checklist and Japan AD Initiation Checklist.

[35] *See* Germany AD Initiation Checklist.

[36] *See* Korea AD Initiation Checklist and Japan AD Initiation Checklist.

[37] *See* country-specific AD Initiation Checklists.

[38] *Id.*

[39] *See* Volume I of the Petitions at Exhibit I–9 through Exhibit I–12; *see also* Volume IV of the Petitions at 1–2.

[40] *See* Memoranda, ''Antidumping Duty Petition on Thermal Paper from the Republic of Korea: Release of Customs Data from U.S. Customs and Border Protection,'' dated October 20, 2020; ''Antidumping Duty Petition on Thermal Paper from Germany: Release of Customs Data from U.S. Customs and Border Protection,'' dated October 21, 2020; and ''Antidumping Duty Petition on Thermal Paper from Japan: Release of Customs Data from U.S. Customs and Border Protection,'' dated October 23, 2020.

[41] *See* Volume I of the Petitions at Exhibit I–2 and Exhibit I–12.

material injury to, a U.S. industry.[42] A negative ITC determination for any country will result in the investigation being terminated with respect to that country.[43] Otherwise, the LTFV investigation will proceed according to statutory and regulatory time limits.

Submission of Factual Information

Factual information is defined in 19 CFR 351.102(b)(21) as: (i) Evidence submitted in response to questionnaires; (ii) evidence submitted in support of allegations; (iii) publicly available information to value factors under 19 CFR 351.408(c) or to measure the adequacy of remuneration under 19 CFR 351.511(a)(2); (iv) evidence placed on the record by Commerce; and (v) evidence other than factual information described in (i)–(iv). Section 351.301(b) of Commerce's regulations requires any party, when submitting factual information, to specify under which subsection of 19 CFR 351.102(b)(21) the information is being submitted [44] and, if the information is submitted to rebut, clarify, or correct factual information already on the record, to provide an explanation identifying the information already on the record that the factual information seeks to rebut, clarify, or correct.[45] Time limits for the submission of factual information are addressed in 19 CFR 351.301, which provides specific time limits based on the type of factual information being submitted. Interested parties should review the regulations prior to submitting factual information in these investigations.

Particular Market Situation Allegation

Section 773(e) of the Act addresses the concept of a particular market situation (PMS) for purposes of CV, stating that ''if a particular market situation exists such that the cost of materials and fabrication or other processing of any kind does not accurately reflect the cost of production in the ordinary course of trade, the administering authority may use another calculation methodology under this subtitle or any other calculation methodology.'' When an interested party submits a PMS allegation pursuant to section 773(e) of the Act, Commerce will respond to such a submission consistent with 19 CFR 351.301(c)(2)(v). If Commerce finds that a PMS exists under section 773(e) of the Act, then it will modify its dumping calculations appropriately.

Neither section 773(e) of the Act, nor 19 CFR 351.301(c)(2)(v), set a deadline for the submission of PMS allegations and supporting factual information. However, in order to administer section 773(e) of the Act, Commerce must receive PMS allegations and supporting factual information with enough time to consider the submission. Thus, should an interested party wish to submit a PMS allegation and supporting new factual information pursuant to section 773(e) of the Act, it must do so no later than 20 days after submission of a respondent's initial section D questionnaire response.

Extensions of Time Limits

Parties may request an extension of time limits before the expiration of a time limit established under 19 CFR 351.301, or as otherwise specified by Commerce. In general, an extension request will be considered untimely if it is filed after the expiration of the time limit established under 19 CFR 351.301. For submissions that are due from multiple parties simultaneously, an extension request will be considered untimely if it is filed after 10:00 a.m. ET on the due date. Under certain circumstances, we may elect to specify a different time limit by which extension requests will be considered untimely for submissions which are due from multiple parties simultaneously. In such a case, we will inform parties in a letter or memorandum of the deadline (including a specified time) by which extension requests must be filed to be considered timely. An extension request must be made in a separate, stand-alone submission; under limited circumstances we will grant untimely-filed requests for the extension of time limits. Parties should review *Extension of Time Limits; Final Rule,* 78 FR 57790 (September 20, 2013), available at *http://www.gpo.gov/fdsys/pkg/FR-2013-09-20/html/2013-22853.htm,* prior to submitting extension requests in these investigations.

Certification Requirements

Any party submitting factual information in an AD or countervailing duty proceeding must certify to the accuracy and completeness of that information.[46] Parties must use the certification formats provided in 19 CFR 351.303(g).[47] Commerce intends to reject factual submissions if the submitting party does not comply with the applicable certification requirements.

Notification to Interested Parties

Interested parties must submit applications for disclosure under APO in accordance with 19 CFR 351.305. Parties wishing to participate in these investigations should ensure that they meet the requirements of 19 CFR 351.103(d) (*e.g.,* by filing the required letter of). Note that Commerce has temporarily modified certain of its requirements for serving documents containing business proprietary information, until further notice.[48]

This notice is issued and published pursuant to sections 732(c)(2) and 777(i) of the Act, and 19 CFR 351.203(c).

Dated: October 27, 2020.

Jeffrey I. Kessler,

Assistant Secretary for Enforcement and Compliance.

Appendix

Scope of the Investigations

The scope of these investigations covers thermal paper in the form of ''jumbo rolls'' and certain ''converted rolls.'' The scope covers jumbo rolls and converted rolls of thermal paper with or without a base coat (typically made of clay, latex, and/or plastic pigments, and/or like materials) on one or both sides; with thermal active coating(s) (typically made of sensitizer, dye, and co-reactant, and/or like materials) on one or both sides; with or without a top coat (typically made of pigments, polyvinyl alcohol, and/or like materials), and without an adhesive backing. Jumbo rolls are defined as rolls with an actual width of 4.5 inches or more, an actual weight of 65 pounds or more, and an actual diameter of 20 inches or more (jumbo rolls). All jumbo rolls are included in the scope regardless of the basis weight of the paper. Also included in the scope are ''converted rolls'' with an actual width of less than 4.5 inches, and with an actual basis weight of 70 grams per square meter (gsm) or less.

The scope of these investigations covers thermal paper that is converted into rolls with an actual width of less than 4.5 inches and with an actual basis weight of 70 gsm or less in third countries from jumbo rolls produced in the subject countries.

The merchandise subject to these investigations may be classified in the Harmonized Tariff Schedule of the United States (HTSUS) under subheadings 4811.90.8030 and 4811.90.9030. Although HTSUS subheadings are provided for convenience and customs purposes, the written description of the scope of these investigations is dispositive.

[FR Doc. 2020–24333 Filed 11–2–20; 8:45 am]

BILLING CODE 3510–DS–P

[42] *See* section 733(a) of the Act.

[43] *Id.*

[44] *See* 19 CFR 351.301(b).

[45] *See* 19 CFR 351.301(b)(2).

[46] *See* section 782(b) of the Act.

[47] *See Certification of Factual Information to Import Administration During Antidumping and Countervailing Duty Proceedings,* 78 FR 42678 (July 17, 2013) (*Final Rule*). Answers to frequently asked questions regarding the *Final Rule* are available at *http://enforcement.trade.gov/tlei/notices/factual_info_final_rule_FAQ_07172013.pdf.*

[48] *See Temporary Rule Modifying AD/CVD Service Requirements Due to COVID–19; Extension of Effective Period,* 85 FR 41363 (July 10, 2020).

DEPARTMENT OF COMMERCE

International Trade Administration

Initiation of Five-Year (Sunset) Reviews

AGENCY: Enforcement and Compliance, International Trade Administration, Department of Commerce.

SUMMARY: In accordance with the Tariff Act of 1930, as amended (the Act), the Department of Commerce (Commerce) is automatically initiating the five-year reviews (Sunset Reviews) of the antidumping and countervailing duty (AD/CVD) order(s) and suspended investigation(s) listed below. The International Trade Commission (the ITC) is publishing concurrently with this notice its notice of *Institution of Five-Year Reviews* which covers the same order(s) and suspended investigation(s).

DATES: Applicable November 1, 2020.

FOR FURTHER INFORMATION CONTACT: Commerce official identified in the *Initiation of Review* section below at AD/CVD Operations, Enforcement and Compliance, International Trade Administration, U.S. Department of Commerce, 1401 Constitution Avenue NW, Washington, DC 20230. For information from the ITC, contact Mary Messer, Office of Investigations, U.S. International Trade Commission at (202) 205–3193.

SUPPLEMENTARY INFORMATION:

Background

Commerce's procedures for the conduct of Sunset Reviews are set forth in its *Procedures for Conducting Five-Year (Sunset) Reviews of Antidumping and Countervailing Duty Orders,* 63 FR 13516 (March 20, 1998) and 70 FR 62061 (October 28, 2005). Guidance on methodological or analytical issues relevant to Commerce's conduct of Sunset Reviews is set forth in *Antidumping Proceedings: Calculation of the Weighted-Average Dumping Margin and Assessment Rate in Certain Antidumping Duty Proceedings; Final Modification,* 77 FR 8101 (February 14, 2012).

Initiation of Review

In accordance with section 751(c) of the Act and 19 CFR 351.218(c), we are initiating the Sunset Reviews of the following antidumping and countervailing duty order(s) and suspended investigation(s):

DOC case No.	ITC case No.	Country	Product	Commerce contact
A–570–849	731–TA–753	China	Cut-to-Length Carbon Steel Plate (4th Review).	Matthew Renkey, (202) 482–2312.
A–570–020	731–TA–1262	China	Melamine (1st Review)	Mary Kolberg, (202) 482–1785.
C–570–021	701–TA–526	China	Melamine (1st Review)	Mary Kolberg, (202) 482–1785.
A–570–962	731–TA–1173	China	Potassium Phosphate (2nd Review)	Matthew Renkey, (202) 482–2312.
C–570–963	701–TA–473	China	Potassium Phosphate (2nd Review)	Jacqueline Arrowsmith, (202) 482–5255.
A–580–876	731–TA–1260	Republic of Korea.	Welded Line Pipe (1st Review)	Mary Kolberg, (202) 482–1785.
A–821–808	731–TA–754	Russia	Cut-to-Length Carbon Steel Plate (4th Review).	Mathew Renkey, (202) 482–2312.
A–489–822	731–TA–1261	Turkey	Welded Line Pipe (1st Review)	Mary Kolberg, (202) 482–1785.
C–489–823	701–TA–525	Turkey	Welded Line Pipe (1st Review)	Mary Kolberg, (202) 482–1785.
A–823–808	731–TA–756	Ukraine	Cut-to-Length Carbon Steel Plate (4th Review).	Matthew Renkey, (202) 482–2312.

Filing Information

As a courtesy, we are making information related to sunset proceedings, including copies of the pertinent statute and Commerce's regulations, Commerce's schedule for Sunset Reviews, a listing of past revocations and continuations, and current service lists, available to the public on Commerce's website at the following address: *https://enforcement.trade.gov/sunset/.* All submissions in these Sunset Reviews must be filed in accordance with Commerce's regulations regarding format, translation, and service of documents. These rules, including electronic filing requirements via Enforcement and Compliance's Antidumping and Countervailing Duty Centralized Electronic Service System (ACCESS), can be found at 19 CFR 351.303.[1]

Any party submitting factual information in an AD/CVD proceeding must certify to the accuracy and completeness of that information.[2] Parties must use the certification formats provided in 19 CFR 351.303(g).[3] Commerce intends to reject factual submissions if the submitting party does not comply with applicable revised certification requirements.

On April 10, 2013, Commerce modified two regulations related to AD/CVD proceedings: The definition of factual information (19 CFR 351.102(b)(21)), and the time limits for the submission of factual information (19 CFR 351.301).[4] Parties are advised to review the final rule, available at *https://enforcement.trade.gov/frn/2013/1304frn/2013-08227.txt,* prior to submitting factual information in these segments. To the extent that other regulations govern the submission of factual information in a segment (such as 19 CFR 351.218), these time limits will continue to be applied. Parties are also advised to review the final rule concerning the extension of time limits for submissions in AD/CVD proceedings, available at *https://enforcement.trade.gov/frn/2013/1309frn/2013-22853.txt,* prior to submitting factual information in these segments.[5]

Letters of Appearance and Administrative Protective Orders

Pursuant to 19 CFR 351.103(d), Commerce will maintain and make available a public service list for these proceedings. Parties wishing to participate in any of these five-year reviews must file letters of appearance as discussed at 19 CFR 351.103(d)). To facilitate the timely preparation of the

[1] *See also Antidumping and Countervailing Duty Proceedings: Electronic Filing Procedures; Administrative Protective Order Procedures,* 76 FR 39263 (July 6, 2011).

[2] *See* section 782(b) of the Act.

[3] *See also Certification of Factual Information to Import Administration During Antidumping and Countervailing Duty Proceedings,* 78 FR 42678 (July 17, 2013) (*Final Rule*). Answers to frequently asked questions regarding the *Final Rule* are available at *http://enforcement.trade.gov/tlei/notices/factual_info_final_rule_FAQ_07172013.pdf.*

[4] *See Definition of Factual Information and Time Limits for Submission of Factual Information: Final Rule,* 78 FR 21246 (April 10, 2013).

[5] *See Extension of Time Limits,* 78 FR 57790 (September 20, 2013).

public service list, it is requested that those seeking recognition as interested parties to a proceeding submit an entry of appearance within 10 days of the publication of the Notice of Initiation. Because deadlines in Sunset Reviews can be very short, we urge interested parties who want access to proprietary information under administrative protective order (APO) to file an APO application immediately following publication in the **Federal Register** of this notice of initiation. Commerce's regulations on submission of proprietary information and eligibility to receive access to business proprietary information under APO can be found at 19 CFR 351.304–306. Note that Commerce has temporarily modified certain of its requirements for serving documents containing business proprietary information, until further notice.[6]

Information Required From Interested Parties

Domestic interested parties, as defined in section 771(9)(C), (D), (E), (F), and (G) of the Act and 19 CFR 351.102(b), wishing to participate in a Sunset Review must respond not later than 15 days after the date of publication in the **Federal Register** of this notice of initiation by filing a notice of intent to participate. The required contents of the notice of intent to participate are set forth at 19 CFR 351.218(d)(1)(ii). In accordance with Commerce's regulations, if we do not receive a notice of intent to participate from at least one domestic interested party by the 15-day deadline, Commerce will automatically revoke the order without further review.[7]

If we receive an order-specific notice of intent to participate from a domestic interested party, Commerce's regulations provide that *all parties* wishing to participate in a Sunset Review must file complete substantive responses not later than 30 days after the date of publication in the **Federal Register** of this notice of initiation. The required contents of a substantive response, on an order-specific basis, are set forth at 19 CFR 351.218(d)(3). Note that certain information requirements differ for respondent and domestic parties. Also, note that Commerce's information requirements are distinct from the ITC's information requirements. Consult Commerce's regulations for information regarding Commerce's conduct of Sunset Reviews. Consult Commerce's regulations at 19 CFR part 351 for definitions of terms and for other general information concerning antidumping and countervailing duty proceedings at Commerce.

This notice of initiation is being published in accordance with section 751(c) of the Act and 19 CFR 351.218(c).

Dated: October 21, 2020.

James Maeder,

Deputy Assistant Secretary for Antidumping and Countervailing Duty Operations.

[FR Doc. 2020–24304 Filed 11–2–20; 8:45 am]

BILLING CODE 3510–DS–P

[6] *See Temporary Rule Modifying AD/CVD Service Requirements Due to* COVID–19, 85 FR 41363 (July 10, 2020).

[7] *See* 19 CFR 351.218(d)(1)(iii).

DEPARTMENT OF COMMERCE

International Trade Administration

Antidumping or Countervailing Duty Order, Finding, or Suspended Investigation; Opportunity To Request Administrative Review

AGENCY: Enforcement and Compliance, International Trade Administration, Department of Commerce.

FOR FURTHER INFORMATION CONTACT: Brenda E. Brown, Office of AD/CVD Operations, Customs Liaison Unit, Enforcement and Compliance, International Trade Administration, U.S. Department of Commerce, 1401 Constitution Avenue NW, Washington, DC 20230, telephone: (202) 482–4735.

SUPPLEMENTARY INFORMATION:

Background

Each year during the anniversary month of the publication of an antidumping or countervailing duty order, finding, or suspended investigation, an interested party, as defined in section 771(9) of the Tariff Act of 1930, as amended (the Act), may request, in accordance with 19 CFR 351.213, that the Department of Commerce (Commerce) conduct an administrative review of that antidumping or countervailing duty order, finding, or suspended investigation.

All deadlines for the submission of comments or actions by Commerce discussed below refer to the number of calendar days from the applicable starting date.

Respondent Selection

In the event Commerce limits the number of respondents for individual examination for administrative reviews initiated pursuant to requests made for the orders identified below, Commerce intends to select respondents based on U.S. Customs and Border Protection (CBP) data for U.S. imports during the period of review. We intend to release the CBP data under Administrative Protective Order (APO) to all parties having an APO within five days of publication of the initiation notice and to make our decision regarding respondent selection within 21 days of publication of the initiation **Federal Register** notice. Therefore, we encourage all parties interested in commenting on respondent selection to submit their APO applications on the date of publication of the initiation notice, or as soon thereafter as possible. Commerce invites comments regarding the CBP data and respondent selection within five days of placement of the CBP data on the record of the review.

In the event Commerce decides it is necessary to limit individual examination of respondents and conduct respondent selection under section 777A(c)(2) of the Act:

In general, Commerce finds that determinations concerning whether particular companies should be ''collapsed'' (*i.e.,* treated as a single entity for purposes of calculating antidumping duty rates) require a substantial amount of detailed information and analysis, which often require follow-up questions and analysis. Accordingly, Commerce will not conduct collapsing analyses at the respondent selection phase of a review and will not collapse companies at the respondent selection phase unless there has been a determination to collapse certain companies in a previous segment of this antidumping proceeding (*i.e.,* investigation, administrative review, new shipper review or changed circumstances review). For any company subject to a review, if Commerce determined, or continued to treat, that company as collapsed with others, Commerce will assume that such companies continue to operate in the same manner and will collapse them for respondent selection purposes. Otherwise, Commerce will not collapse companies for purposes of respondent selection. Parties are requested to (a) identify which companies subject to review previously were collapsed, and (b) provide a citation to the proceeding in which they were collapsed. Further, if companies are requested to complete a Quantity and Value Questionnaire for purposes of respondent selection, in general each company must report volume and value data separately for itself. Parties should not include data for any other party, even if they believe they should be treated as a single entity with that other party. If a company was collapsed with another company or companies in the most recently completed segment of a proceeding

where Commerce considered collapsing that entity, complete quantity and value data for that collapsed entity must be submitted.

Deadline for Withdrawal of Request for Administrative Review

Pursuant to 19 CFR 351.213(d)(1), a party that requests a review may withdraw that request within 90 days of the date of publication of the notice of initiation of the requested review. The regulation provides that Commerce may extend this time if it is reasonable to do so. Determinations by Commerce to extend the 90-day deadline will be made on a case-by-case basis.

Deadline for Particular Market Situation Allegation

Section 504 of the Trade Preferences Extension Act of 2015 amended the Act by adding the concept of particular market situation (PMS) for purposes of constructed value under section 773(e) of the Act.[1] Section 773(e) of the Act states that ''if a particular market situation exists such that the cost of materials and fabrication or other processing of any kind does not accurately reflect the cost of production in the ordinary course of trade, the administering authority may use another calculation methodology under this subtitle or any other calculation methodology.'' When an interested party submits a PMS allegation pursuant to section 773(e) of the Act, Commerce will respond to such a submission consistent with 19 CFR 351.301(c)(2)(v). If Commerce finds that a PMS exists under section 773(e) of the Act, then it will modify its dumping calculations appropriately.

Neither section 773(e) of the Act nor 19 CFR 351.301(c)(2)(v) set a deadline for the submission of PMS allegations and supporting factual information. However, in order to administer section 773(e) of the Act, Commerce must receive PMS allegations and supporting factual information with enough time to consider the submission. Thus, should an interested party wish to submit a PMS allegation and supporting new factual information pursuant to section 773(e) of the Act, it must do so no later than 20 days after submission of initial Section D responses.

Opportunity To Request a Review: Not later than the last day of November 2020,[2] interested parties may request administrative review of the following orders, findings, or suspended investigations, with anniversary dates in November for the following periods:

	Period of review
Antidumping Duty Proceedings	
AUSTRIA: Strontium Chromate, A–433–813	6/18/19–10/31/20
BRAZIL: Circular Welded Non-Alloy Steel Pipe, A–351–809	11/1/19–10/31/20
FRANCE: Strontium Chromate, A–427–830	5/17/19–10/31/20
INDIA: Welded Stainless Pressure Pipe, A–533–867	11/1/19–10/31/20
INDONESIA: Coated Paper Suitable For High-Quality Print Graphics Using Sheet-Fed Presses, A–560–823	11/1/19–10/31/20
INDONESIA: Monosodium Glutamate, A–560–826	11/1/19–10/31/20
ITALY: Forged Steel Fittings, A–475–839	11/1/19–10/31/20
MEXICO: Circular Welded Non-Alloy Steel Pipe, A–201–805	11/1/19–10/31/20
MEXICO: Refillable Stainless Steel Kegs,[3] A–201–849	10/9/19–9/30/20
MEXICO: Seamless Refined Copper Pipe and Tube, A–201–838	11/1/19–10/31/20
MEXICO: Steel Concrete Reinforcing Bar, A–201–844	11/1/19–10/31/20
REPUBLIC OF KOREA: Circular Welded Non-Alloy Steel Pipe, A–580–809	11/1/19–10/31/20
TAIWAN: Certain Circular Welded Non-Alloy Steel Pipe, A–583–814	11/1/19–10/31/20
TAIWAN: Certain Hot-Rolled Carbon Steel Flat Products, A–583–835	11/1/19–10/31/20
THAILAND: Certain Hot-Rolled Carbon Steel Flat Products, A–549–817	11/1/19–10/31/20
THE PEOPLE'S REPUBLIC OF CHINA: Certain Hot Rolled Carbon Steel Flat Products, A–570–865	11/1/19–10/31/20
THE PEOPLE'S REPUBLIC OF CHINA: Certain Coated Paper Suitable For High-Quality Print Graphic Using Sheet-Fed Presses, A–570–958	11/1/19–10/31/20
THE PEOPLE'S REPUBLIC OF CHINA: Diamond Sawblades and Parts Thereof, A–570–900	11/1/19–10/31/20
THE PEOPLE'S REPUBLIC OF CHINA: Fresh Garlic, A–570–831	11/1/19–10/31/20
THE PEOPLE'S REPUBLIC OF CHINA: Forged Steel Fittings, A–570–067	11/1/19–10/31/20
THE PEOPLE'S REPUBLIC OF CHINA: Lightweight Thermal Paper, A–570–920	11/1/19–10/31/30
THE PEOPLE'S REPUBLIC OF CHINA: Monosodium Glutamate, A–570–992	11/1/19–10/31/20
THE PEOPLE'S REPUBLIC OF CHINA: Paper Clips, A–570–826	11/1/19–10/31/20
THE PEOPLE'S REPUBLIC OF CHINA: Polyethylene Terephthalate (Pet) Film, A–570–924	11/1/19–10/31/20
THE PEOPLE'S REPUBLIC OF CHINA: Pure Magnesium in Granular Form, A–570–864	11/1/19–10/31/20
THE PEOPLE'S REPUBLIC OF CHINA: Refined Brown Aluminum Oxide, A–570–882	11/1/19–10/31/20
THE PEOPLE'S REPUBLIC OF CHINA: Seamless Carbon and Alloy Steel Standard, Line And Pressure Pipe, A–570–956	11/1/19–10/31/20
THE PEOPLE'S REPUBLIC OF CHINA: Seamless Refined Copper Pipe and Tube, A–570–964	11/1/19–10/31/20
THE PEOPLE'S REPUBLIC OF CHINA: Sodium Gluconate, Gluconic Acid, and Derivative Products, A–570–071	11/1/19–10/31/20
UKRAINE: Certain Hot-Rolled Carbon Steel Flat Products, A–823–811	11/1/19–10/31/20
UNITED ARAB EMIRATES: Polyethylene Terephthalate (Pet) Film, A–520–803	11/1/19–10/31/20
Countervailing Duty Proceedings	
INDIA: Welded Stainless Pressure Pipe, C–533–868	1/1/19–12/31/19
INDONESIA: Certain Coated Paper Suitable For High-Quality Print Graphics Using Sheet-Fed Presses, C–560–824	1/1/19–12/31/19
THE PEOPLE'S REPUBLIC OF CHINA: Chlorinated Isocyanurates, C–570–991	1/1/19–12/31/19
THE PEOPLE'S REPUBLIC OF CHINA: Certain Coated Paper Suitable For High-Quality Print Graphic Using Sheet-Fed Presses, C–570–959	1/1/19–12/31/19
THE PEOPLE'S REPUBLIC OF CHINA: Forged Steel Fittings, C–570–068	1/1/19–12/31/19
THE PEOPLE'S REPUBLIC OF CHINA: Lightweight Thermal Paper, C–570–921	1/1/19–12/31/19
THE PEOPLE'S REPUBLIC OF CHINA: Seamless Carbon and Alloy Steel Standard, Line, And Pressure Pipe, C–570–957	1/1/19–12/31/19
THE PEOPLE'S REPUBLIC OF CHINA: Sodium Gluconate, Gluconic Acid, and Derivative Products, C–570–072	1/1/19–12/31/19
TURKEY: Steel Concrete Reinforcing Bar, C–489–819	1/1/19–12/31/19

[1] *See* Trade Preferences Extension Act of 2015, Public Law 114–27, 129 Stat. 362 (2015).

[2] Or the next business day, if the deadline falls on a weekend, federal holiday or any other day when Commerce is closed.

	Period of review
Suspension Agreements	
UKRAINE: Certain Cut-To-Length Carbon Steel Plate, A–823–808	11/1/19–10/31/20

In accordance with 19 CFR 351.213(b), an interested party as defined by section 771(9) of the Act may request in writing that the Secretary conduct an administrative review. For both antidumping and countervailing duty reviews, the interested party must specify the individual producers or exporters covered by an antidumping finding or an antidumping or countervailing duty order or suspension agreement for which it is requesting a review. In addition, a domestic interested party or an interested party described in section 771(9)(B) of the Act must state why it desires the Secretary to review those particular producers or exporters. If the interested party intends for the Secretary to review sales of merchandise by an exporter (or a producer if that producer also exports merchandise from other suppliers) which was produced in more than one country of origin and each country of origin is subject to a separate order, then the interested party must state specifically, on an order-by-order basis, which exporter(s) the request is intended to cover.

As explained in *Antidumping and Countervailing Duty Proceedings: Assessment of Antidumping Duties,* 68 FR 23954 (May 6, 2003), and *Non-Market Economy Antidumping Proceedings: Assessment of Antidumping Duties,* 76 FR 65694 (October 24, 2011), Commerce clarified its practice with respect to the collection of final antidumping duties on imports of merchandise where intermediate firms are involved. The public should be aware of this clarification in determining whether to request an administrative review of merchandise subject to antidumping findings and orders.[4]

Commerce no longer considers the non-market economy (NME) entity as an exporter conditionally subject to an antidumping duty administrative reviews.[5] Accordingly, the NME entity will not be under review unless Commerce specifically receives a request for, or self-initiates, a review of the NME entity.[6] In administrative reviews of antidumping duty orders on merchandise from NME countries where a review of the NME entity has not been initiated, but where an individual exporter for which a review was initiated does not qualify for a separate rate, Commerce will issue a final decision indicating that the company in question is part of the NME entity. However, in that situation, because no review of the NME entity was conducted, the NME entity's entries were not subject to the review and the rate for the NME entity is not subject to change as a result of that review (although the rate for the individual exporter may change as a function of the finding that the exporter is part of the NME entity). Following initiation of an antidumping administrative review when there is no review requested of the NME entity, Commerce will instruct CBP to liquidate entries for all exporters not named in the initiation notice, including those that were suspended at the NME entity rate.

All requests must be filed electronically in Enforcement and Compliance's Antidumping and Countervailing Duty Centralized Electronic Service System (ACCESS) on Enforcement and Compliance's ACCESS website at *https://access.trade.gov.*[7] Further, in accordance with 19 CFR 351.303(f)(l)(i), a copy of each request must be served on the petitioner and each exporter or producer specified in the request. Note that Commerce has temporarily modified certain of its requirements for serving documents containing business proprietary information, until further notice.[8]

Commerce will publish in the **Federal Register** a notice of ''Initiation of Administrative Review of Antidumping or Countervailing Duty Order, Finding, or Suspended Investigation'' for requests received by the last day of November 2020. If Commerce does not receive, by the last day of November 2020, a request for review of entries covered by an order, finding, or suspended investigation listed in this notice and for the period identified above, Commerce will instruct CBP to assess antidumping or countervailing duties on those entries at a rate equal to the cash deposit of estimated antidumping or countervailing duties required on those entries at the time of entry, or withdrawal from warehouse, for consumption and to continue to collect the cash deposit previously ordered.

For the first administrative review of any order, there will be no assessment of antidumping or countervailing duties on entries of subject merchandise entered, or withdrawn from warehouse, for consumption during the relevant provisional-measures ''gap'' period of the order, if such a gap period is applicable to the period of review.

This notice is not required by statute but is published as a service to the international trading community.

Dated: October 21, 2020.

James Maeder,

Deputy Assistant Secretary for Antidumping and Countervailing Duty Operations.

[FR Doc. 2020–24323 Filed 11–2–20; 8:45 am]

BILLING CODE 3510–DS–P

[3] In the Opportunity to Request Administrative Review Notice that published on October 1, 2020 (85 FR 61926), commerce inadvertently listed the wrong case name for the referenced case above. The correct case name is listed in this notice.

Note that, for any party Commerce was unable to locate in prior segments, Commerce will not accept a request for an administrative review of that party absent new information as to the party's location. Moreover, if the interested party who files a request for review is unable to locate the producer or exporter for which it requested the review, the interested party must provide an explanation of the attempts it made to locate the producer or exporter at the same time it files its request for review, in order for the Secretary to determine if the interested party's attempts were reasonable, pursuant to 19 CFR 351.303(f)(3)(ii).

[4] *See* the Enforcement and Compliance website at *https://legacy.trade.gov/enforcement/.*

[5] *See Antidumping Proceedings: Announcement of Change in Department Practice for Respondent Selection in Antidumping Duty Proceedings and Conditional Review of the Nonmarket Economy Entity in NME Antidumping Duty Proceedings,* 78 FR 65963 (November 4, 2013).

[6] In accordance with 19 CFR 351.213(b)(1), parties should specify that they are requesting a review of entries from exporters comprising the entity, and to the extent possible, include the names of such exporters in their request.

[7] *See Antidumping and Countervailing Duty Proceedings: Electronic Filing Procedures; Administrative Protective Order Procedures,* 76 FR 39263 (July 6, 2011).

[8] *See Temporary Rule Modifying AD/CVD Service Requirements Due to COVID–19,* 85 FR 41363 (July 10, 2020).

DEPARTMENT OF COMMERCE

International Trade Administration

[A–801–002]

Mattresses From the Serbia: Preliminary Affirmative Determination of Sales at Less Than Fair Value, Preliminary Negative Determination of Critical Circumstances, Postponement of Final Determination, and Extension of Provisional Measures

AGENCY: Enforcement and Compliance, International Trade Administration, Department of Commerce.

SUMMARY: The Department of Commerce (Commerce) preliminarily determines that mattresses from Serbia are being, or are likely to be, sold in the United States at less than fair value (LTFV). The period of investigation is January 1, 2019 through December 31, 2019. Interested parties are invited to comment on this preliminary determination.

DATES: Applicable November 3, 2020.

FOR FURTHER INFORMATION CONTACT: Joshua DeMoss, AD/CVD Operations, Office VI, Enforcement and Compliance, International Trade Administration, U.S. Department of Commerce, 1401 Constitution Avenue NW, Washington, DC 20230; telephone: (202) 482–3362.

SUPPLEMENTARY INFORMATION:

Background

This preliminary determination is made in accordance with section 733(b) of the Tariff Act of 1930, as amended (the Act). Commerce published the notice of initiation of this investigation on April 24, 2020.[1] On August 11, 2020, Commerce postponed the preliminary determination of this investigation and the revised deadline is now October 27, 2020.[2] For a complete description of the events that followed the initiation of this investigation, *see* the Preliminary Decision Memorandum.[3] A list of topics included in the Preliminary Decision Memorandum is included as Appendix II to this notice. The Preliminary Decision Memorandum is a public document and is on file electronically via Enforcement and Compliance's Antidumping and Countervailing Duty Centralized Electronic Service System (ACCESS). ACCESS is available to registered users at *https://access.trade.gov.* In addition, a complete version of the Preliminary Decision Memorandum can be accessed directly at *http://enforcement.trade.gov/frn/.* The signed and the electronic versions of the Preliminary Decision Memorandum are identical in content.

Scope of the Investigation

The product covered by this investigation is mattresses from Serbia. For a full description of the scope of this investigation, *see* Appendix I.

Scope Comments

In accordance with the preamble to Commerce's regulations,[4] the *Initiation Notice* set aside a period of time for parties to raise issues regarding product coverage (*i.e.,* scope).[5] Certain interested parties commented on the scope of the investigation as it appeared in the *Initiation Notice.* For a summary of the product coverage comments and rebuttal responses submitted to the record for this preliminary determination, and accompanying discussion and analysis of all comments timely received, *see* the Preliminary Scope Decision Memorandum.[6] In the Preliminary Scope Decision Memorandum, Commerce determined that it is not preliminarily modifying the scope language as it appeared in the *Initiation Notice. See* the scope in Appendix I to this notice.

The Preliminary Scope Decision Memorandum establishes a deadline to submit scope case briefs, and indicates that there will be no further opportunity for comments on scope-related issues.[7]

Preliminary Negative Determination of Critical Circumstances

In accordance with section 733(e) of the Act and 19 CFR 351.206, Commerce preliminarily finds that critical circumstances do not exist with respect to Healthcare and for all other companies. For a full description of the methodology and results of Commerce's critical circumstances analysis, *see* the Preliminary Decision Memorandum.

All-Others Rate

Sections 733(d)(1)(ii) and 735(c)(5)(A) of the Act provide that in the preliminary determination Commerce shall determine an estimated all-others rate for all exporters and producers not individually examined. This rate shall be an amount equal to the weighted average of the estimated weighted-average dumping margins established for exporters and producers individually investigated, excluding any zero and *de minimis* margins, and any margins determined entirely under section 776 of the Act.

Commerce calculated an individual estimated weighted-average dumping margin for Healthcare Europe DOO Ruma (Healthcare), the only individually examined exporter/producer in this investigation. Because the only individually calculated dumping margin is not zero, *de minimis,* or based entirely on facts otherwise available, the estimated weighted-average dumping margin calculated for Healthcare is the margin preliminarily assigned to all other producers and exporters, pursuant to section 735(c)(5)(A) of the Act.

Preliminary Determination

Commerce preliminarily determines that the following estimated weighted-average dumping margins exist:

Exporter/producer	Estimated weighted-average dumping margin (percent)
Healthcare Europe DOO Ruma	13.65
All Others	13.65

Suspension of Liquidation

In accordance with section 733(d)(2) of the Act, Commerce will direct U.S. Customs and Border Protection (CBP) to suspend liquidation of entries of subject merchandise, as described in Appendix I, entered, or withdrawn from warehouse, for consumption on or after the date of publication of this notice in the **Federal Register**. Further, pursuant to section 733(d)(1)(B) of the Act and 19 CFR 351.205(d), Commerce will instruct CBP to require a cash deposit equal to the estimated weighted-average dumping margin or the estimated all-others rate, as follows: (1) The cash deposit rate for the respondents listed above will be equal to the company-

[1] *See Mattresses from Cambodia, Indonesia, Malaysia, Serbia, Thailand, the Republic of Turkey, and the Socialist Republic of Vietnam: Initiation of Less-Than-Fair-Value Investigations,* 85 FR 23002 (April 24, 2020) (*Initiation Notice*).

[2] *See Mattresses from Cambodia, Indonesia, Malaysia, Serbia, Thailand, the Republic of Turkey, and the Socialist Republic of Vietnam: Postponement of Preliminary Determinations in the Less-Than-Fair-Value Investigations,* 85 FR 48505 (August 11, 2020).

[3] *See* Memorandum, ''Decision Memorandum for the Preliminary Determination in the Less-Than-Fair-Value Investigation of Mattresses from Serbia,'' dated concurrently with, and hereby adopted by, this notice (Preliminary Decision Memorandum).

[4] *See Antidumping Duties; Countervailing Duties, Final Rule,* 62 FR 27296, 27323 (May 19, 1997).

[5] *See Initiation Notice.*

[6] *See* Memorandum, ''Mattresses from Cambodia, Indonesia, Malaysia, Serbia, Thailand, the Republic of Turkey, the Socialist Republic of Vietnam, and the People's Republic of China: Scope Comments Decision Memorandum for the Preliminary Determination,'' (Preliminary Scope Decision Memorandum), dated concurrently with this preliminary determination.

[7] Case briefs, other written comments, and rebuttal briefs submitted in response to this preliminary determination should not include scope-related issues. *See* Preliminary Scope Decision Memorandum; and ''Public Comment'' section of this notice.

specific estimated weighted-average dumping margins determined in this preliminary determination; (2) if the exporter is not a respondent identified above, but the producer is, then the cash deposit rate will be equal to the company-specific estimated weighted-average dumping margin established for that producer of the subject merchandise; and (3) the cash deposit rate for all other producers and exporters will be equal to the all-others estimated weighted-average dumping margin. These suspension of liquidation instructions will remain in effect until further notice.

Disclosure

Commerce intends to disclose its calculations and analysis performed to interested parties in this preliminary determination within five days of any public announcement or, if there is no public announcement, within five days of the date of publication of this notice in accordance with 19 CFR 351.224(b).

Verification

Commerce is currently unable to conduct on-site verification of the information relied upon in making its final determination in this investigation. Accordingly, we intend to take additional steps in lieu of on-site verification. Commerce will notify interested parties of any additional documentation or information required.

Public Comment

Case briefs or other written comments may be submitted to the Assistant Secretary for Enforcement and Compliance. Commerce will notify interested parties of the deadline for the submission of case briefs. Rebuttal briefs, limited to issues raised in case briefs, may be submitted no later than seven days after the deadline date for case briefs.[8] Note that Commerce has modified certain of its requirements for serving documents containing business proprietary information until further notice.[9] Pursuant to 19 CFR 351.309(c)(2) and (d)(2), parties who submit case briefs or rebuttal briefs in this investigation are encouraged to submit with each argument: (1) A statement of the issue; (2) a brief summary of the argument; and (3) a table of authorities.

Pursuant to 19 CFR 351.310(c), interested parties who wish to request a hearing, limited to issues raised in the case and rebuttal briefs, must submit a written request to the Assistant Secretary for Enforcement and Compliance, U.S. Department of Commerce within 30 days after the date of publication of this notice. Requests should contain the party's name, address, and telephone number, the number of participants, whether any participant is a foreign national, and a list of the issues to be discussed. If a request for a hearing is made, Commerce intends to hold the hearing at a date and time to be determined. Parties should confirm by telephone the date, time, and location of the hearing two days before the scheduled date.

Parties are reminded that briefs and hearing requests are to be filed electronically using ACCESS and that electronically filed documents must be received successfully in their entirety by 5 p.m. Eastern Time on the due date.

Postponement of Final Determination and Extension of Provisional Measures

Section 735(a)(2) of the Act provides that a final determination may be postponed until not later than 135 days after the date of the publication of the preliminary determination if, in the event of an affirmative preliminary determination, a request for such postponement is made by exporters who account for a significant proportion of exports of the subject merchandise, or in the event of a negative preliminary determination, a request for such postponement is made by the petitioner. Section 351.210(e)(2) of Commerce's regulations requires that a request by exporters for postponement of the final determination be accompanied by a request for extension of provisional measures from a four-month period to a period not more than six months in duration.

On October 9, 2020, pursuant to 19 CFR 351.210(e), Healthcare requested that Commerce postpone the final determination and that provisional measures be extended to a period not to exceed six months.[10] In accordance with section 735(a)(2)(A) of the Act and 19 CFR 351.210(b)(2)(ii), because: (1) The preliminary determination is affirmative; (2) the requesting exporter accounts for a significant proportion of exports of the subject merchandise; and (3) no compelling reasons for denial exist, Commerce is postponing the final determination and extending the provisional measures from a four-month period to a period not greater than six months. Accordingly, Commerce will make its final determination no later than 135 days after the date of publication of this preliminary determination.

International Trade Commission Notification

In accordance with section 733(f) of the Act, Commerce will notify the International Trade Commission (ITC) of its preliminary determination. If the final determination is affirmative, the ITC will determine before the later of 120 days after the date of this preliminary determination or 45 days after the final determination whether these imports materially injure, or threaten material injury to, the U.S. industry.

Notification to Interested Parties

This determination is issued and published in accordance with sections 733(f) and 777(i)(1) of the Act and 19 CFR 351.205(c).

Dated: October 27, 2020.

Jeffrey I. Kessler,

Assistant Secretary for Enforcement and Compliance.

Appendix I

Scope of the Investigation

The products covered by this investigation are all types of youth and adult mattresses. The term ''mattress'' denotes an assembly of materials that at a minimum includes a ''core,'' which provides the main support system of the mattress, and may consist of innersprings, foam, other resilient filling, or a combination of these materials. Mattresses may also contain: (1) ''upholstery,'' the material between the core and the top panel of the ticking on a single-sided mattress; or between the core and the top and bottom panel of the ticking on a double-sided mattress; and/or (2) ''ticking,'' the outermost layer of fabric or other material (*e.g.,* vinyl) that encloses the core and any upholstery, also known as a cover.

The scope of this investigation is restricted to only ''adult mattresses'' and ''youth mattresses.'' ''Adult mattresses'' are frequently described as ''twin,'' ''extra-long twin,'' ''full,'' ''queen,'' ''king,'' or ''California king'' mattresses. ''Youth mattresses'' are typically described as ''crib,'' ''toddler,'' or ''youth'' mattresses. All adult and youth mattresses are included regardless of size and size description.

The scope encompasses all types of ''innerspring mattresses,'' ''non-innerspring mattresses,'' and ''hybrid mattresses.'' ''Innerspring mattresses'' contain innersprings, a series of metal springs joined together in sizes that correspond to the dimensions of mattresses. Mattresses that contain innersprings are referred to as ''innerspring mattresses'' or ''hybrid mattresses.'' ''Hybrid mattresses'' contain two

[8] *See* 19 CFR 351.309; *see also* 19 CFR 351.303 (for general filing requirements); *see also Temporary Rule Modifying AD/CVD Service Requirements Due to COVID–19,* 85 FR 17006 (March 26, 2020); and *Temporary Rule Modifying AD/CVD Service Requirements Due to COVID–19; Extension of Effective Period,* 85 FR 41363 (July 10, 2020) (*Temporary Rule*).

[9] *See Temporary Rule.*

[10] *See* Healthcare's Letter, ''Mattresses from Serbia: Request to Postpone Final Determination,'' dated October 9, 2020.

or more support systems as the core, such as layers of both memory foam and innerspring units.

''Non-innerspring mattresses'' are those that do not contain any innerspring units. They are generally produced from foams (*e.g.,* polyurethane, memory (viscoelastic), latex foam, gel-infused viscoelastic (gel foam), thermobonded polyester, polyethylene) or other resilient filling.

Mattresses covered by the scope of this investigation may be imported independently, as part of furniture or furniture mechanisms (*e.g.,* convertible sofa bed mattresses, sofa bed mattresses imported with sofa bed mechanisms, corner group mattresses, day-bed mattresses, roll-away bed mattresses, high risers, trundle bed mattresses, crib mattresses), or as part of a set in combination with a ''mattress foundation.'' ''Mattress foundations'' are any base or support for a mattress. Mattress foundations are commonly referred to as ''foundations,'' ''boxsprings,'' ''platforms,'' and/or ''bases.'' Bases can be static, foldable, or adjustable. Only the mattress is covered by the scope if imported as part of furniture, with furniture mechanisms, or as part of a set in combination with a mattress foundation.

Excluded from the scope of this investigation are ''futon'' mattresses. A ''futon'' is a bi-fold frame made of wood, metal, or plastic material, or any combination thereof, that functions as both seating furniture (such as a couch, love seat, or sofa) and a bed. A ''futon mattress'' is a tufted mattress, where the top covering is secured to the bottom with thread that goes completely through the mattress from the top through to the bottom, and it does not contain innersprings or foam. A futon mattress is both the bed and seating surface for the futon.

Also excluded from the scope are airbeds (including inflatable mattresses) and waterbeds, which consist of air- or liquid-filled bladders as the core or main support system of the mattress.

Also excluded is certain multifunctional furniture that is convertible from seating to sleeping, regardless of filler material or components, where that filler material or components are upholstered, integrated into the design and construction of, and inseparable from, the furniture framing, and the outermost layer of the multifunctional furniture converts into the sleeping surface. Such furniture may, and without limitation, be commonly referred to as ''convertible sofas,'' ''sofabeds,'' ''sofa chaise sleepers,'' ''futons,'' ''ottoman sleepers'' or a like description.

Also excluded from the scope of this investigation are any products covered by the existing antidumping duty orders on uncovered innerspring units from China or Vietnam. *See Uncovered Innerspring Units from the People's Republic of China: Notice of Antidumping Duty Order,* 74 FR 7661 (February 19, 2009); *Uncovered Innerspring Units from the Socialist Republic of Vietnam,* 73 FR 75391 (December 11, 2008).

Also excluded from the scope of this investigation are bassinet pads with a nominal length of less than 39 inches, a nominal width less than 25 inches, and a nominal depth of less than 2 inches.

Additionally, also excluded from the scope of this investigation are ''mattress toppers.'' A ''mattress topper'' is a removable bedding accessory that supplements a mattress by providing an additional layer that is placed on top of a mattress. Excluded mattress toppers have a height of four inches or less.

The products subject to this investigation are currently properly classifiable under HTSUS subheadings: 9404.21.0010, 9404.21.0013, 9404.29.1005, 9404.29.1013, 9404.29.9085, and 9404.29.9087. Products subject to this investigation may also enter under HTSUS subheadings: 9404.21.0095, 9404.29.1095, 9404.29.9095, 9401.40.0000, and 9401.90.5081. Although the HTSUS subheadings are provided for convenience and customs purposes, the written description of the merchandise subject to this investigation is dispositive.

Appendix II

List of Topics Discussed in the Preliminary Decision Memorandum

I. Summary
II. Background
III. Period of Investigation
IV. Preliminary Negative Determination of Critical Circumstances
V. MNC Provision
VI. Discussion of the Methodology
VII. Currency Conversion
VIII. Recommendation

[FR Doc. 2020–24302 Filed 11–2–20; 8:45 am]

BILLING CODE 3510–DS–P

DEPARTMENT OF COMMERCE

International Trade Administration

[A–552–827]

Mattresses From the Socialist Republic of Vietnam: Preliminary Affirmative Determination of Sales at Less Than Fair Value, Postponement of Final Determination, and Extension of Provisional Measures

AGENCY: Enforcement and Compliance, International Trade Administration, Department of Commerce.

SUMMARY: The Department of Commerce (Commerce) preliminarily determines that mattresses from the Socialist Republic of Vietnam (Vietnam) are being, or are likely to be, sold in the United States at less than fair value (LTFV). The period of investigation (POI) is July 1, 2019 through December 31, 2019. Interested parties are invited to comment on this preliminary determination.

DATES: Applicable November 3, 2020.

FOR FURTHER INFORMATION CONTACT: Stephen Bailey or Dakota Potts, AD/CVD Operations, Office IV, Enforcement and Compliance, International Trade Administration, U.S. Department of Commerce, 1401 Constitution Avenue NW, Washington, DC 20230; telephone: (202) 482–0193 or (202) 482–0223, respectively.

SUPPLEMENTARY INFORMATION:

Background

This preliminary determination is made in accordance with section 733(b) of the Tariff Act of 1930, as amended (the Act). Commerce published the notice of initiation of this investigation on April 24, 2020.[1] On August 11, 2020, Commerce postponed the preliminary determination of this investigation and the revised deadline is now October 27, 2020.[2] For a complete description of the events that followed the initiation of this investigation, *see* the Preliminary Decision Memorandum.[3] A list of topics included in the Preliminary Decision Memorandum is included as Appendix II to this notice. The Preliminary Decision Memorandum is a public document and is on file electronically via Enforcement and Compliance's Antidumping and Countervailing Duty Centralized Electronic Service System (ACCESS). ACCESS is available to registered users at *https://access.trade.gov.* In addition, a complete version of the Preliminary Decision Memorandum can be accessed directly at *http://enforcement.trade.gov/frn/.* The signed and the electronic versions of the Preliminary Decision Memorandum are identical in content.

Scope of the Investigation

The product covered by this investigation is mattresses from Vietnam. For a full description of the scope of this investigation, *see* Appendix I.

Scope Comments

In accordance with the preamble to Commerce's regulations,[4] the *Initiation Notice* set aside a period of time for parties to raise issues regarding product coverage (*i.e.,* scope).[5] Certain interested parties commented on the scope of the investigation as it appeared in the

---

[1] *See Mattresses from Cambodia, Indonesia, Malaysia, Serbia, Thailand, the Republic of Turkey, and the Socialist Republic of Vietnam: Initiation of Less-Than-Fair-Value Investigations,* 85 FR 23002 (April 24, 2020) (*Initiation Notice*).

[2] See *Mattresses from Cambodia, Indonesia, Malaysia, Serbia, Thailand, the Republic of Turkey, and the Socialist Republic of Vietnam: Postponement of Preliminary Determinations in the Less-Than-Fair-Value Investigations,* 85 FR 48505 (August 11, 2020).

[3] *See* Memorandum, ''Decision Memorandum for the Preliminary Determination in the Less-Than-Fair-Value Investigation of Mattresses from the Socialist Republic of Vietnam,'' dated concurrently with, and hereby adopted by, this notice (Preliminary Decision Memorandum).

[4] *See Antidumping Duties; Countervailing Duties, Final Rule,* 62 FR 27296, 27323 (May 19, 1997).

[5] *See Initiation Notice.*

Initiation Notice. For a summary of the product coverage comments and rebuttal responses submitted to the record for this preliminary determination, and accompanying discussion and analysis of all comments timely received, *see* the Preliminary Scope Decision Memorandum.[6] In the Preliminary Scope Decision Memorandum, Commerce determined that it is not preliminarily modifying the scope language as it appeared in the *Initiation Notice. See* the scope in Appendix I to this notice.

The Preliminary Scope Decision Memorandum establishes a deadline to submit scope case briefs and indicates that there will be no further opportunity for comments on scope-related issues.[7]

Methodology

Commerce is conducting this investigation in accordance with section 731 of the Act. Commerce has calculated export prices in accordance with section 772(a) of the Act. Because Vietnam is a non-market economy, within the meaning of section 771(18) of the Act, Commerce has calculated normal value (NV) in accordance with section 773 of the Act. Furthermore, pursuant to section 776(a) and (b) of the Act, Commerce has preliminarily relied upon facts otherwise available with adverse inferences to determine the estimated weighted-average dumping margin for Vietnam Glory Home Furnishings Co., Ltd./Glory (Viet Nam) Industry Co., Ltd. (collectively, Vietnam Glory)[8] and the Vietnam-wide entity. For a full description of the methodology underlying the preliminary determination, *see* the Preliminary Decision Memorandum.

Combination Rates

In the *Initiation Notice,*[9] Commerce explained that it would calculate producer/exporter combination rates for the respondents that are eligible for a separate rate in this investigation. Policy Bulletin 05.1 describes this practice.[10]

Preliminary Determination

Commerce preliminarily determines that the following estimated weighted-average dumping margins exist:

Producer	Exporter	Estimated weighted-average dumping margin (percent)
Vietnam Glory Home Furnishings Co., Ltd./Glory (Viet Nam) Industry Co., Ltd.	Vietnam Glory Home Furnishings Co., Ltd./Glory (Viet Nam) Industry Co., Ltd.	989.90
Wanek Furniture Co., Ltd./Millennium Furniture Co., Ltd./ Comfort Bedding Company Limited.	Wanek Furniture Co., Ltd./Millennium Furniture Co., Ltd./ Comfort Bedding Company Limited.	190.79
Cong Ty Tnhm Nem Thien Kim (a.k.a. Better Zs, Ltd.)	Dockter China Limited	190.79
Cong Ty Tnhm Nem Thien Kim (a.k.a. Better Zs, Ltd.)	Healthcare Sleep Products Limited	190.79
Hava's Co., Ltd	Hava's Co., Ltd	190.79
Gesin Vietnam Co., Ltd	Hong Kong Gesin Technology Limited	190.79
Taimei Company Limited (a.k.a. Taimei Co., Ltd)	Taimei Company Limited (a.k.a. Taimei Co., Ltd)	190.79
Tong Li Vietnam Industrial Co., LTD	Tong Li Vietnam Industrial Co., LTD	190.79
Super Foam Vietnam Ltd	Super Foam Vietnam Ltd	190.79
Sinomax (Vietnam) Household Products Limited	Sinomax International Trading Limited	190.79
Sinomax (Vietnam) Household Products Limited	Sinomax Macao Commercial Offshore Limited	190.79
Vietnam-wide Entity	Vietnam-wide Entity	989.90

Suspension of Liquidation

In accordance with section 733(d)(2) of the Act, Commerce will direct U.S. Customs and Border Protection (CBP) to suspend liquidation of entries of subject merchandise, as described in Appendix I, entered, or withdrawn from warehouse, for consumption on or after the date of publication of this notice in the **Federal Register**, as discussed below. Further, pursuant to section 733(d)(1)(B) of the Act and 19 CFR 351.205(d), Commerce will instruct CBP to require a cash deposit equal to the weighted average amount by which NV exceeds U.S. price, as indicated in the table above as follows: (1) For the producer/exporter combinations listed in the table above, the cash deposit rate is equal to the estimated weighted-average dumping margin listed for that combination in the table; (2) for all combinations of Vietnam producers/exporters of merchandise under consideration that have not established eligibility for their own separate rates, the cash deposit rate will be equal to the estimated weighted-average dumping margin established for the Vietnam-wide entity; and (3) for all third-country exporters of merchandise under consideration not listed in the table above, the cash deposit rate is the cash deposit rate applicable to the Vietnam producer/exporter combination (or the Vietnam-wide entity) that supplied that third-country exporter. These suspension of liquidation instructions will remain in effect until further notice.

Disclosure

Commerce intends to disclose its calculations and analysis performed to interested parties in this preliminary determination within five days of any public announcement or, if there is no public announcement, within five days of the date of publication of this notice in accordance with 19 CFR 351.224(b). Because Commerce preliminarily applied adverse facts available to determine the estimated weighted-average dumping margin for Vietnam Glory, in according with section 776 of the Act, and the applied AFA rate is based solely on the highest margin alleged on the Petition, there are no calculations to disclose for Vietnam Glory.

[6] *See* Memorandum, ''Mattresses from Cambodia, Indonesia, Malaysia, Serbia, Thailand, the Republic of Turkey, the Socialist Republic of Vietnam, and the People's Republic of China: Scope Comments Decision Memorandum for the Preliminary Determination,'' (Preliminary Scope Decision Memorandum), dated concurrently with this preliminary determination.

[7] Case briefs, other written comments, and rebuttal briefs submitted in response to this preliminary determination should not include scope-related issues. *See* Preliminary Scope Decision Memorandum; and ''Public Comment'' section of this notice.

[8] Commerce has preliminarily determined to collapse the following companies: Vietnam Glory Home Furnishings Co., Ltd. and Glory (Viet Nam) Industry Co., Ltd. (collectively, Vietnam Glory). *See* Memorandum, ''Vietnam Glory Preliminary Collapsing Memorandum,'' dated concurrently with this notice.

[9] *See Initiation Notice,* 85 FR 23007.

[10] *See* Policy Bulletin No. 05.1, ''Separate-Rates Practice and Application of Combination Rates in Antidumping Investigations involving Non-Market Economy Countries,'' (April 5, 2005) (Policy Bulletin 05.1), available on Commerce's website at *http://enforcement.trade.gov/policy/bull05-1.pdf.*

Verification

Commerce is currently unable to conduct on-site verification of the information relied upon in making its final determination in this investigation. Accordingly, we intend to take additional steps in lieu of on-site verification. Commerce will notify interested parties of any additional documentation or information required.

Public Comment

Case briefs or other written comments may be submitted to the Assistant Secretary for Enforcement and Compliance. A timeline for the submission of case briefs and written comments on non-scope issues will be announced at a later date. Rebuttal briefs, limited to issues raised in case briefs, may be submitted no later than seven days after the deadline for case briefs.[11] Note that Commerce has temporarily modified certain of its requirements for serving documents containing business proprietary information, until further notice.[12] Pursuant to 19 CFR 351.309(c)(2) and (d)(2), parties who submit case briefs or rebuttal briefs in this investigation are encouraged to submit with each argument: (1) A statement of the issue; (2) a brief summary of the argument; and (3) a table of authorities.

Pursuant to 19 CFR 351.310(c), interested parties who wish to request a hearing, limited to issues raised in the case and rebuttal briefs, must submit a written request to the Assistant Secretary for Enforcement and Compliance, U.S. Department of Commerce, within 30 days after the date of publication of this notice. Requests should contain the party's name, address, and telephone number, the number of participants, whether any participant is a foreign national, and a list of the issues to be discussed. If a request for a hearing is made, Commerce intends to hold the hearing at a time and date to be determined. Parties should confirm by telephone the date and time of the hearing two days before the scheduled date of the hearing.

Postponement of Final Determination and Extension of Provisional Measures

Section 735(a)(2) of the Act provides that a final determination may be postponed until not later than 135 days after the date of the publication of the preliminary determination if, in the event of an affirmative preliminary determination, a request for such postponement is made by exporters who account for a significant proportion of exports of the subject merchandise, or in the event of a negative preliminary determination, a request for such postponement is made by the petitioner. Section 351.210(e)(2) of Commerce's regulations requires that a request by exporters for postponement of the final determination be accompanied by a request for extension of provisional measures from a four-month period to a period not more than six months in duration.

On October 13, 2020, pursuant to 19 CFR 351.210(e), Vietnam Glory and the Ashley Group [13] requested that Commerce postpone the final determination and that provisional measures be extended to a period not to exceed six months.[14] In accordance with section 735(a)(2)(A) of the Act and 19 CFR 351.210(b)(2)(ii), because: (1) The preliminary determination is affirmative; (2) the requesting exporters account for a significant proportion of exports of the subject merchandise; and (3) no compelling reasons for denial exist, Commerce is postponing the final determination and extending the provisional measures from a four-month period to a period not greater than six months. Accordingly, Commerce will make its final determination no later than 135 days after the date of publication of this preliminary determination.

International Trade Commission Notification

In accordance with section 733(f) of the Act, Commerce will notify the International Trade Commission (ITC) of its preliminary determination. If the final determination is affirmative, the ITC will determine before the later of 120 days after the date of this preliminary determination or 45 days after the final determination whether these imports materially injure, or threaten material injury to, the U.S. industry.

Notification to Interested Parties

This determination is issued and published in accordance with sections 733(f) and 777(i)(1) of the Act and 19 CFR 351.205(c).

Dated: October 27, 2020.

Jeffrey I. Kessler,

Assistant Secretary for Enforcement and Compliance.

Appendix I

Scope of the Investigation

The products covered by this investigation are all types of youth and adult mattresses. The term ''mattress'' denotes an assembly of materials that at a minimum includes a ''core,'' which provides the main support system of the mattress, and may consist of innersprings, foam, other resilient filling, or a combination of these materials. Mattresses may also contain: (1) ''Upholstery,'' the material between the core and the top panel of the ticking on a single-sided mattress; or between the core and the top and bottom panel of the ticking on a double-sided mattress; and/or (2) ''ticking,'' the outermost layer of fabric or other material (*e.g.,* vinyl) that encloses the core and any upholstery, also known as a cover.

The scope of this investigation is restricted to only ''adult mattresses'' and ''youth mattresses.'' ''Adult mattresses'' are frequently described as ''twin,'' ''extra-long twin,'' ''full,'' ''queen,'' ''king,'' or ''California king'' mattresses. ''Youth mattresses'' are typically described as ''crib,'' ''toddler,'' or ''youth'' mattresses. All adult and youth mattresses are included regardless of size and size description.

The scope encompasses all types of ''innerspring mattresses,'' ''non-innerspring mattresses,'' and ''hybrid mattresses.'' ''Innerspring mattresses'' contain innersprings, a series of metal springs joined together in sizes that correspond to the dimensions of mattresses. Mattresses that contain innersprings are referred to as ''innerspring mattresses'' or ''hybrid mattresses.'' ''Hybrid mattresses'' contain two or more support systems as the core, such as layers of both memory foam and innerspring units.

''Non-innerspring mattresses'' are those that do not contain any innerspring units. They are generally produced from foams (*e.g.,* polyurethane, memory (viscoelastic), latex foam, gel-infused viscoelastic (gel foam), thermobonded polyester, polyethylene) or other resilient filling.

Mattresses covered by the scope of this investigation may be imported independently, as part of furniture or furniture mechanisms (*e.g.,* convertible sofa bed mattresses, sofa bed mattresses imported with sofa bed mechanisms, corner group mattresses, day-bed mattresses, roll-away bed mattresses, high risers, trundle bed mattresses, crib mattresses), or as part of a set in combination with a ''mattress foundation.'' ''Mattress foundations'' are any base or support for a mattress. Mattress foundations are commonly referred to as ''foundations,'' ''boxsprings,'' ''platforms,'' and/or ''bases.'' Bases can be static, foldable, or adjustable.

[11] *See* 19 CFR 351.309; *see also* 19 CFR 351.303 (for general filing requirements).

[12] *See Temporary Rule Modifying AD/CVD Service Requirements Due to COVID–19,* 85 FR 17006 (March 26, 2020); and *Temporary Rule Modifying AD/CVD Service Requirements Due to COVID–19; Extension of Effective Period,* 85 FR 41363 (July 10, 2020).

[13] Commerce has preliminary determined to collapse the following companies: Wanek Furniture Co., Ltd.; Millennium Furniture Co., Ltd.; and Comfort Bedding Company Limited (collectively, the Ashley Group). *See* Memorandum, ''Ashley Group Preliminary Collapsing Memorandum,'' dated concurrently with this notice.

[14] *See* Ashley Group's Letter, ''Mattresses from the Socialist Republic of Vietnam: Request to Postpone Final Determination,'' dated October 13, 2020; *see also* Vietnam Glory's Letter, ''Mattresses from the Socialist Republic of Vietnam: Request for Extension of Time of Final Determination,'' dated October 13, 2020.

Only the mattress is covered by the scope if imported as part of furniture, with furniture mechanisms, or as part of a set in combination with a mattress foundation.

Excluded from the scope of this investigation are ''futon'' mattresses. A ''futon'' is a bi-fold frame made of wood, metal, or plastic material, or any combination thereof, that functions as both seating furniture (such as a couch, love seat, or sofa) and a bed. A ''futon mattress'' is a tufted mattress, where the top covering is secured to the bottom with thread that goes completely through the mattress from the top through to the bottom, and it does not contain innersprings or foam. A futon mattress is both the bed and seating surface for the futon.

Also excluded from the scope are airbeds (including inflatable mattresses) and waterbeds, which consist of air- or liquid-filled bladders as the core or main support system of the mattress.

Also excluded is certain multifunctional furniture that is convertible from seating to sleeping, regardless of filler material or components, where that filler material or components are upholstered, integrated into the design and construction of, and inseparable from, the furniture framing, and the outermost layer of the multifunctional furniture converts into the sleeping surface. Such furniture may, and without limitation, be commonly referred to as ''convertible sofas,'' ''sofabeds,'' ''sofa chaise sleepers,'' ''futons,'' ''ottoman sleepers'' or a like description.

Also excluded from the scope of this investigation are any products covered by the existing antidumping duty orders on uncovered innerspring units from China or Vietnam. *See Uncovered Innerspring Units from the People's Republic of China: Notice of Antidumping Duty Order,* 74 FR 7661 (February 19, 2009); *Uncovered Innerspring Units from the Socialist Republic of Vietnam,* 73 FR 75391 (December 11, 2008).

Also excluded from the scope of this investigation are bassinet pads with a nominal length of less than 39 inches, a nominal width less than 25 inches, and a nominal depth of less than 2 inches.

Additionally, also excluded from the scope of this investigation are ''mattress toppers.'' A ''mattress topper'' is a removable bedding accessory that supplements a mattress by providing an additional layer that is placed on top of a mattress. Excluded mattress toppers have a height of four inches or less.

The products subject to this investigation are currently properly classifiable under HTSUS subheadings: 9404.21.0010, 9404.21.0013, 9404.29.1005, 9404.29.1013, 9404.29.9085, and 9404.29.9087. Products subject to this investigation may also enter under HTSUS subheadings: 9404.21.0095, 9404.29.1095, 9404.29.9095, 9401.40.0000, and 9401.90.5081. Although the HTSUS subheadings are provided for convenience and customs purposes, the written description of the merchandise subject to this investigation is dispositive.

Appendix II

List of Topics Discussed in the Preliminary Decision Memorandum

I. Summary
II. Background
III. Period of Investigation
IV. Postponement of the Final Determination
V. Single Entity Treatment
VI. Application of Facts Available and Use of Adverse Facts Available
VII. Discussion of the Methodology
VIII. Currency Conversion
IX. Recommendation

[FR Doc. 2020–24300 Filed 11–2–20; 8:45 am]

BILLING CODE 3510–DS–P

DEPARTMENT OF COMMERCE

International Trade Administration

[A–555–001]

Mattresses From Cambodia: Preliminary Affirmative Determination of Sales at Less Than Fair Value, Preliminary Affirmative Determination of Critical Circumstances, Postponement of Final Determination, and Extension of Provisional Measures

AGENCY: Enforcement and Compliance, International Trade Administration, Department of Commerce.

SUMMARY: The Department of Commerce (Commerce) preliminarily determines that mattresses from Cambodia are being, or are likely to be, sold in the United States at less than fair value (LTFV). The period of investigation (POI) is January 1, 2019 through December 31, 2019. Interested parties are invited to comment on this preliminary determination.

DATES: Applicable November 3, 2020.

FOR FURTHER INFORMATION CONTACT: John McGowan or Preston Cox, AD/CVD Operations, Office VI, Enforcement and Compliance, International Trade Administration, U.S. Department of Commerce, 1401 Constitution Avenue NW, Washington, DC 20230; telephone: (202) 482–3019 or (202) 482–5041, respectively.

SUPPLEMENTARY INFORMATION:

Background

This preliminary determination is made in accordance with section 733(b) of the Tariff Act of 1930, as amended (the Act). Commerce published the notice of initiation of this investigation on April 24, 2020.[1] On August 11, 2020, Commerce postponed the preliminary determination of this investigation, and the revised deadline is now October 27, 2020.[2] For a complete description of the events that followed the initiation of this investigation, *see* the Preliminary Decision Memorandum.[3] A list of topics included in the Preliminary Decision Memorandum is included as Appendix II to this notice. The Preliminary Decision Memorandum is a public document and is on file electronically via Enforcement and Compliance's Antidumping and Countervailing Duty Centralized Electronic Service System (ACCESS). ACCESS is available to registered users at *https://access.trade.gov.* In addition, a complete version of the Preliminary Decision Memorandum can be accessed directly at *http://enforcement.trade.gov/frn/.* The signed and the electronic versions of the Preliminary Decision Memorandum are identical in content.

Scope of the Investigation

The product covered by this investigation is mattresses from Cambodia. For a full description of the scope of this investigation, *see* Appendix I.

Scope Comments

In accordance with the preamble to Commerce's regulations,[4] the *Initiation Notice* set aside a period of time for parties to raise issues regarding product coverage (*i.e.,* scope).[5] Certain interested parties commented on the scope of the investigation as it appeared in the *Initiation Notice.* For a summary of the product coverage comments and rebuttal responses submitted to the record for this preliminary determination, and accompanying discussion and analysis of all comments timely received, *see* the Preliminary Scope Decision Memorandum.[6] In the Preliminary Scope Decision Memorandum, Commerce determined

---

[1] *See Mattresses from Cambodia, Indonesia, Malaysia, Serbia, Thailand, the Republic of Turkey, and the Socialist Republic of Vietnam: Initiation of Less-Than-Fair-Value Investigations,* 85 FR 23002 (April 24, 2020) (*Initiation Notice*).

[2] See *Mattresses from Cambodia, Indonesia, Malaysia, Serbia, Thailand, the Republic of Turkey, and the Socialist Republic of Vietnam: Postponement of Preliminary Determinations in the Less-Than-Fair-Value Investigations,* 85 FR 48505 (August 11, 2020).

[3] *See* Memorandum, ''Decision Memorandum for the Preliminary Affirmative Determination in the Less-Than-Fair-Value Investigation of Mattresses from Cambodia,'' dated concurrently with, and hereby adopted by, this notice (Preliminary Decision Memorandum).

[4] *See Antidumping Duties; Countervailing Duties, Final Rule,* 62 FR 27296, 27323 (May 19, 1997).

[5] *See Initiation Notice.*

[6] *See* Memorandum, ''Mattresses from Cambodia, Indonesia, Malaysia, Serbia, Thailand, the Republic of Turkey, the Socialist Republic of Vietnam, and the People's Republic of China: Scope Comments Decision Memorandum for the Preliminary Determination,'' (Preliminary Scope Decision Memorandum), dated concurrently with this preliminary determination.

that it is not preliminarily modifying the scope language as it appeared in the *Initiation Notice. See* the scope in Appendix I to this notice.

The Preliminary Scope Decision Memorandum establishes a deadline to submit scope case briefs, and indicates that there will be no further opportunity for comments on scope-related issues.[7]

Preliminary Affirmative Determination of Critical Circumstances

In accordance with section 733(e) of the Act and 19 CFR 351.206, Commerce preliminarily determines that critical circumstances exist with respect to imports of mattresses from Best Mattresses International Company Limited and Rose Lion Furniture International (collectively, Best Mattresses/Rose Lion),[8] and that critical circumstances do not exist with respect to all other exporters or producers not individually examined. For a full description of the methodology and results of Commerce's analysis, *see* the Preliminary Decision Memorandum.

All-Others Rate

Sections 733(d)(1)(ii) and 735(c)(5)(A) of the Act provide that in the preliminary determination Commerce shall determine an estimated all-others rate for all exporters and producers not individually examined. This rate shall be an amount equal to the weighted average of the estimated weighted-average dumping margins established for exporters and producers individually investigated, excluding any zero and *de minimis* margins, and any margins determined entirely under section 776 of the Act.

Commerce calculated an individual estimated weighted-average dumping margin for Best Mattresses/Rose Lion, the only individually examined exporter/producer in this investigation. Because the only individually calculated dumping margin is not zero, *de minimis,* or based entirely on facts otherwise available, the estimated weighted-average dumping margin calculated for Best Mattresses/Rose Lion is the margin assigned to all-other producers and exporters, pursuant to section 735(c)(5)(A) of the Act.

Preliminary Determination

Commerce preliminarily determines that the following estimated weighted-average dumping margins exist:

Exporter/producer	Estimated weighted-average dumping margin (percent)
Best Mattresses International Company Limited and Rose Lion Furniture International	252.74
All Others	252.74

Suspension of Liquidation

In accordance with section 733(d)(2) of the Act, Commerce will direct U.S. Customs and Border Protection (CBP) to suspend liquidation of entries of subject merchandise, as described in Appendix I, entered, or withdrawn from warehouse, for consumption on or after the date of publication of this notice in the **Federal Register**. Further, pursuant to section 733(d)(1)(B) of the Act and 19 CFR 351.205(d), Commerce will instruct CBP to require a cash deposit equal to the estimated weighted-average dumping margin or the estimated all-others rate, as follows: (1) The cash deposit rate for the respondents listed above will be equal to the company-specific estimated weighted-average dumping margins determined in this preliminary determination; (2) if the exporter is not a respondent identified above, but the producer is, then the cash deposit rate will be equal to the company-specific estimated weighted-average dumping margin established for that producer of the subject merchandise; and (3) the cash deposit rate for all other producers and exporters will be equal to the all-others estimated weighted-average dumping margin. These suspension of liquidation instructions will remain in effect until further notice.

Section 733(e)(2) of the Act provides that, given an affirmative determination of critical circumstances, any suspension of liquidation shall apply to unliquidated entries of subject merchandise entered, or withdrawn from warehouse, for consumption on or after the later of (a) the date which is 90 days before the date on which the suspension of liquidation was first ordered, or (b) the date on which notice of initiation of the investigation was published. Commerce preliminarily finds that critical circumstances exist for imports of subject merchandise produced or exported by Best Mattresses/Rose Lion. In accordance with section 733(e)(2)(A) of the Act, the suspension of liquidation shall apply to unliquidated entries of shipments of subject merchandise from the producer(s) or exporter(s) identified in this paragraph that were entered, or withdrawn from warehouse, for consumption on or after the date which is 90 days before the publication of this notice.

Disclosure

Commerce intends to disclose its calculations and analysis performed to interested parties in this preliminary determination within five days of any public announcement or, if there is no public announcement, within five days of the date of publication of this notice in accordance with 19 CFR 351.224(b).

Verification

Commerce is currently unable to conduct on-site verification of the information relied upon in making its final determination in this investigation. Accordingly, we intend to take additional steps in lieu of on-site verification. Commerce will notify interested parties of any additional documentation or information required.

Public Comment

Case briefs or other written comments on non-scope issues may be submitted to the Assistant Secretary for Enforcement and Compliance. Interested parties will be notified of a timeline for the submission of such case briefs and written comments at a later date. Rebuttal briefs, limited to issues raised in case briefs, may be submitted no later than seven days after the deadline date for case briefs.[9] Note that Commerce has modified certain of its requirements for serving documents containing business proprietary information until further notice.[10] Pursuant to 19 CFR 351.309(c)(2) and (d)(2), parties who submit case briefs or rebuttal briefs in this investigation are encouraged to submit with each argument: (1) A statement of the issue; (2) a brief summary of the argument; and (3) a table of authorities.

Pursuant to 19 CFR 351.310(c), interested parties who wish to request a hearing, limited to issues raised in the case and rebuttal briefs, must submit a written request to the Assistant Secretary for Enforcement and

[7] Case briefs, other written comments, and rebuttal briefs submitted in response to this preliminary determination should not include scope-related issues. *See* Preliminary Scope Decision Memorandum; and ''Public Comment'' section of this notice.

[8] Commerce has determined to collapse Best Mattresses International Company Limited and Rose Lion Furniture International Company Limited, and treat them as a single entity. *See* Memorandum, ''Less-Than-Fair-Value Investigation of Mattresses from Cambodia: Affiliation and Collapsing Analysis for Best Mattresses International Company Limited and Rose Lion Furniture International Company Limited,'' dated concurrently with this notice.

[9] *See* 19 CFR 351.309; *see also* 19 CFR 351.303 (for general filing requirements); *see also Temporary Rule Modifying AD/CVD Service Requirements Due to COVID–19; Extension of Effective Period,* 85 FR 41363 (July 10, 2020) (*Temporary Rule*).

[10] *See Temporary Rule.*

Compliance, U.S. Department of Commerce, within 30 days after the date of publication of this notice. Requests should contain the party's name, address, and telephone number, the number of participants, whether any participant is a foreign national, and a list of the issues to be discussed. If a request for a hearing is made, Commerce intends to hold the hearing at the U.S. Department of Commerce, 1401 Constitution Avenue NW, Washington, DC 20230, at a time and date to be determined. Parties should confirm by telephone the date, time, and location of the hearing two days before the scheduled date.

Postponement of Final Determination and Extension of Provisional Measures

Section 735(a)(2) of the Act provides that a final determination may be postponed until not later than 135 days after the date of the publication of the preliminary determination if, in the event of an affirmative preliminary determination, a request for such postponement is made by exporters who account for a significant proportion of exports of the subject merchandise, or in the event of a negative preliminary determination, a request for such postponement is made by the petitioner. Section 351.210(e)(2) of Commerce's regulations requires that a request by exporters for postponement of the final determination be accompanied by a request for extension of provisional measures from a four-month period to a period not more than six months in duration.

On September 29, 2020, pursuant to 19 CFR 351.210(e), Best Mattresses/Rose Lion requested that Commerce postpone the final determination and that provisional measures be extended to a period not to exceed six months.[11] On September 30, 2020, the petitioners [12] requested that Commerce postpone the final determination.[13] In accordance with section 735(a)(2)(A) of the Act and 19 CFR 351.210(b)(2)(ii), because: (1) The preliminary determination is affirmative; (2) the requesting exporter accounts for a significant proportion of exports of the subject merchandise; and (3) no compelling reasons for denial exist, Commerce is postponing the final determination and extending the provisional measures from a four-month period to a period not greater than six months. Accordingly, Commerce will make its final determination no later than 135 days after the date of publication of this preliminary determination.

International Trade Commission Notification

In accordance with section 733(f) of the Act, Commerce will notify the International Trade Commission (ITC) of its preliminary determination. If the final determination is affirmative, the ITC will determine before the later of 120 days after the date of this preliminary determination or 45 days after the final determination whether these imports materially injure, or threaten material injury to, the U.S. industry.

Notification to Interested Parties

This determination is issued and published in accordance with sections 733(f) and 777(i)(1) of the Act and 19 CFR 351.205(c).

Dated: October 27, 2020.

Jeffrey I. Kessler,

Assistant Secretary for Enforcement and Compliance.

Appendix I

Scope of the Investigation

The products covered by this investigation are all types of youth and adult mattresses. The term ''mattress'' denotes an assembly of materials that at a minimum includes a ''core,'' which provides the main support system of the mattress, and may consist of innersprings, foam, other resilient filling, or a combination of these materials. Mattresses may also contain: (1) ''upholstery,'' the material between the core and the top panel of the ticking on a single-sided mattress; or between the core and the top and bottom panel of the ticking on a double-sided mattress; and/or (2) ''ticking,'' the outermost layer of fabric or other material (*e.g.,* vinyl) that encloses the core and any upholstery, also known as a cover.

The scope of this investigation is restricted to only ''adult mattresses'' and ''youth mattresses.'' ''Adult mattresses'' are frequently described as ''twin,'' ''extra-long twin,'' ''full,'' ''queen,'' ''king,'' or ''California king'' mattresses. ''Youth mattresses'' are typically described as ''crib,'' ''toddler,'' or ''youth'' mattresses. All adult and youth mattresses are included regardless of size and size description.

The scope encompasses all types of ''innerspring mattresses,'' ''non-innerspring mattresses,'' and ''hybrid mattresses.'' ''Innerspring mattresses'' contain innersprings, a series of metal springs joined together in sizes that correspond to the dimensions of mattresses. Mattresses that contain innersprings are referred to as ''innerspring mattresses'' or ''hybrid mattresses.'' ''Hybrid mattresses'' contain two or more support systems as the core, such as layers of both memory foam and innerspring units.

''Non-innerspring mattresses'' are those that do not contain any innerspring units. They are generally produced from foams (*e.g.,* polyurethane, memory (viscoelastic), latex foam, gel-infused viscoelastic (gel foam), thermobonded polyester, polyethylene) or other resilient filling.

Mattresses covered by the scope of this investigation may be imported independently, as part of furniture or furniture mechanisms (*e.g.,* convertible sofa bed mattresses, sofa bed mattresses imported with sofa bed mechanisms, corner group mattresses, day-bed mattresses, roll-away bed mattresses, high risers, trundle bed mattresses, crib mattresses), or as part of a set in combination with a ''mattress foundation.'' ''Mattress foundations'' are any base or support for a mattress. Mattress foundations are commonly referred to as ''foundations,'' ''boxsprings,'' ''platforms,'' and/or ''bases.'' Bases can be static, foldable, or adjustable. Only the mattress is covered by the scope if imported as part of furniture, with furniture mechanisms, or as part of a set in combination with a mattress foundation.

Excluded from the scope of this investigation are ''futon'' mattresses. A ''futon'' is a bi-fold frame made of wood, metal, or plastic material, or any combination thereof, that functions as both seating furniture (such as a couch, love seat, or sofa) and a bed. A ''futon mattress'' is a tufted mattress, where the top covering is secured to the bottom with thread that goes completely through the mattress from the top through to the bottom, and it does not contain innersprings or foam. A futon mattress is both the bed and seating surface for the futon.

Also excluded from the scope are airbeds (including inflatable mattresses) and waterbeds, which consist of air- or liquid-filled bladders as the core or main support system of the mattress.

Also excluded is certain multifunctional furniture that is convertible from seating to sleeping, regardless of filler material or components, where that filler material or components are upholstered, integrated into the design and construction of, and inseparable from, the furniture framing, and the outermost layer of the multifunctional furniture converts into the sleeping surface. Such furniture may, and without limitation, be commonly referred to as ''convertible sofas,'' ''sofabeds,'' ''sofa chaise sleepers,'' ''futons,'' ''ottoman sleepers'' or a like description.

Also excluded from the scope of this investigation are any products covered by the

[11] *See* Best Mattresses/Rose Lion's Letter, ''Mattresses from Cambodia: Request to Postpone Final Determination,'' dated September 29, 2020.

[12] The petitioners are Brooklyn Bedding, Corsicana Mattress Company: Elite Comfort Solutions; FXI Inc.; Innocor Inc.; Kolcraft Enterprises Inc.; Leggett & Platt, Incorporated; the International Brotherhood of Teamsters; and United Steel, Paper and Forestry, Rubber, Manufacturing, Energy, Allied Industrial and Service Workers International Union, AFL–CIO (USW) (collectively, the petitioners).

[13] *See* Petitioners' Letter, ''Mattresses from Cambodia: Mattress Petitioners' Request to Postpone Final Determination,'' dated September 30, 2020; *see also* Petitioners' Letter, ''Mattresses from Cambodia: Mattress Petitioners' Updated Request to Postpone Final Determination,'' dated October 14, 2020; and Petitioners' Letter, ''Mattresses from Cambodia, Malaysia, Serbia, Thailand, Turkey, and Vietnam: Mattress Petitioners' Revised Request to Postpone Final Determination,'' dated October 15, 2020.

existing antidumping duty orders on uncovered innerspring units from China or Vietnam. *See Uncovered Innerspring Units from the People's Republic of China: Notice of Antidumping Duty Order,* 74 FR 7661 (February 19, 2009); *Uncovered Innerspring Units from the Socialist Republic of Vietnam,* 73 FR 75391 (December 11, 2008).

Also excluded from the scope of this investigation are bassinet pads with a nominal length of less than 39 inches, a nominal width less than 25 inches, and a nominal depth of less than 2 inches.

Additionally, also excluded from the scope of this investigation are ''mattress toppers.'' A ''mattress topper'' is a removable bedding accessory that supplements a mattress by providing an additional layer that is placed on top of a mattress. Excluded mattress toppers have a height of four inches or less.

The products subject to this investigation are currently properly classifiable under HTSUS subheadings: 9404.21.0010, 9404.21.0013, 9404.29.1005, 9404.29.1013, 9404.29.9085, and 9404.29.9087. Products subject to this investigation may also enter under HTSUS subheadings: 9404.21.0095, 9404.29.1095, 9404.29.9095, 9401.40.0000, and 9401.90.5081. Although the HTSUS subheadings are provided for convenience and customs purposes, the written description of the merchandise subject to this investigation is dispositive.

Appendix II

List of Topics Discussed in the Preliminary Decision Memorandum

I. Summary
II. Background
III. Period of Investigation
IV. Affiliation and Collapsing of Affiliates
V. Affirmative Preliminary Determination of Critical Circumstances, In Part
VI. Discussion of the Methodology
VII. Particular Market Situation
VIII. Recommendation

[FR Doc. 2020–24301 Filed 11–2–20; 8:45 am]

BILLING CODE 3510–DS–P

DEPARTMENT OF COMMERCE

International Trade Administration

[A–560–836]

Mattresses From Indonesia: Preliminary Affirmative Determination of Sales at Less Than Fair Value, Postponement of Final Determination, and Extension of Provisional Measures

AGENCY: Enforcement and Compliance, International Trade Administration, Department of Commerce.

SUMMARY: The Department of Commerce (Commerce) preliminarily determines that mattresses from Indonesia are being, or are likely to be, sold in the United States at less than fair value (LTFV). The period of investigation (POI) is January 1, 2019 through December 31, 2019. Interested parties are invited to comment on this preliminary determination.

DATES: Applicable November 3, 2020.

FOR FURTHER INFORMATION CONTACT: Janae Martin or Rebecca Trainor, AD/CVD Operations, Office VIII, Enforcement and Compliance, International Trade Administration, U.S. Department of Commerce, 1401 Constitution Avenue NW, Washington, DC 20230; telephone: (202) 482–0238 or (202) 482–4007, respectively.

SUPPLEMENTARY INFORMATION:

Background

This preliminary determination is made in accordance with section 733(b) of the Tariff Act of 1930, as amended (the Act). Commerce published the notice of initiation of this investigation on April 24, 2020.[1] On August 11, 2020, Commerce postponed the preliminary determination of this investigation and the revised deadline is now October 27, 2020.[2] For a complete description of the events that followed the initiation of this investigation, *see* the Preliminary Decision Memorandum.[3] A list of topics included in the Preliminary Decision Memorandum is included as Appendix II to this notice. The Preliminary Decision Memorandum is a public document and is on file electronically via Enforcement and Compliance's Antidumping and Countervailing Duty Centralized Electronic Service System (ACCESS). ACCESS is available to registered users at *https://access.trade.gov.* In addition, a complete version of the Preliminary Decision Memorandum can be accessed directly at *http://enforcement.trade.gov/frn/.* The signed and the electronic versions of the Preliminary Decision Memorandum are identical in content.

Scope of the Investigation

The product covered by this investigation is mattresses from Indonesia. For a full description of the scope of this investigation, *see* Appendix I.

Scope Comments

In accordance with the preamble to Commerce's regulations,[4] the *Initiation Notice* set aside a period of time for parties to raise issues regarding product coverage (*i.e.,* scope).[5] Certain interested parties commented on the scope of the investigation as it appeared in the *Initiation Notice.* For a summary of the product coverage comments and rebuttal responses submitted to the record for this preliminary determination, and accompanying discussion and analysis of all comments timely received, *see* the Preliminary Scope Decision Memorandum.[6] In the Preliminary Scope Decision Memorandum, Commerce determined that it is not preliminarily modifying the scope language as it appeared in the *Initiation Notice. See* the scope in Appendix I to this notice.

The Preliminary Scope Decision Memorandum establishes a deadline to submit scope case briefs, and indicates that there will be no further opportunity for comments on scope-related issues.[7]

Methodology

Commerce is conducting this investigation in accordance with section 731 of the Act. Commerce has calculated export prices in accordance with section 772(a) of the Act. Constructed export prices have been calculated in accordance with section 772(b) of the Act. Normal value (NV) is calculated in accordance with section 773 of the Act. For a full description of the methodology underlying the preliminary determination, *see* the Preliminary Decision Memorandum.

All-Others Rate

Sections 733(d)(1)(ii) and 735(c)(5)(A) of the Act provide that in the preliminary determination Commerce

[1] *See Mattresses from Cambodia, Indonesia, Malaysia, Serbia, Thailand, the Republic of Turkey, and the Socialist Republic of Vietnam: Initiation of Less-Than-Fair-Value Investigations,* 85 FR 23002 (April 24, 2020) (*Initiation Notice*).

[2] *See Mattresses from Cambodia, Indonesia, Malaysia, Serbia, Thailand, the Republic of Turkey, and the Socialist Republic of Vietnam: Postponement of Preliminary Determinations in the Less-Than-Fair-Value Investigations,* 85 FR 48505 (August 11, 2020); *see also* Petitioners' Letter, ''Mattresses from Cambodia, China, Indonesia, Malaysia, Serbia, Thailand, Turkey, and Vietnam: Request to Extend Preliminary Results and Align the Countervailing Duty Investigation with the Concurrent Antidumping Duty Investigations,'' dated July 30, 2020.

[3] *See* Memorandum, ''Decision Memorandum for the Preliminary Affirmative Determination and Postponement of Final Determination in the Less-Than-Fair-Value Investigation of Mattresses from Indonesia'' dated concurrently with, and hereby adopted by, this notice (Preliminary Decision Memorandum).

[4] *See Antidumping Duties; Countervailing Duties, Final Rule,* 62 FR 27296, 27323 (May 19, 1997).

[5] *See Initiation Notice.*

[6] *See* Memorandum, ''Mattresses from Cambodia, Indonesia, Malaysia, Serbia, Thailand, the Republic of Turkey, the Socialist Republic of Vietnam, and the People's Republic of China: Scope Comments Decision Memorandum for the Preliminary Determination,'' (Preliminary Scope Decision Memorandum), dated concurrently with this preliminary determination.

[7] Case briefs, other written comments, and rebuttal briefs submitted in response to this preliminary determination should not include scope-related issues. *See* Preliminary Scope Decision Memorandum; and ''Public Comment'' section of this notice.

shall determine an estimated all-others rate for all exporters and producers not individually examined. This rate shall be an amount equal to the weighted average of the estimated weighted-average dumping margins established for exporters and producers individually investigated, excluding any zero and *de minimis* margins, and any margins determined entirely under section 776 of the Act.

Commerce calculated an individual estimated weighted-average dumping margin for PT Zinus Global Indonesia (Zinus), the only individually examined exporter/producer in this investigation. Because the only individually calculated dumping margin is not zero, *de minimis,* or based entirely on facts otherwise available, the estimated weighted-average dumping margin calculated for Zinus is the margin assigned to all other producers and exporters, pursuant to section 735(c)(5)(A) of the Act.

Preliminary Determination

Commerce preliminarily determines that the following estimated weighted-average dumping margins exist:

Exporter/producer	Estimated weighted-average dumping margin (percent)
PT Zinus Global Indonesia	2.61
All Others	2.61

Suspension of Liquidation

In accordance with section 733(d)(2) of the Act, Commerce will direct U.S. Customs and Border Protection (CBP) to suspend liquidation of entries of subject merchandise, as described in Appendix I, entered, or withdrawn from warehouse, for consumption on or after the date of publication of this notice in the **Federal Register**. Further, pursuant to section 733(d)(1)(B) of the Act and 19 CFR 351.205(d), Commerce will instruct CBP to require a cash deposit equal to the estimated weighted-average dumping margin, as follows: (1) The cash deposit rate for the respondent listed above will be equal to the company-specific estimated weighted-average dumping margin determined in this preliminary determination; (2) if the exporter is not a respondent identified above, but the producer is, then the cash deposit rate will be equal to the company-specific estimated weighted-average dumping margin established for that producer of the subject merchandise; and (3) the cash deposit rate for all other producers and exporters will be equal to the all-others estimated weighted-average dumping margin. These suspension of liquidation instructions will remain in effect until further notice.

Disclosure

Commerce intends to disclose its calculations and analysis performed to interested parties in this preliminary determination within five days of any public announcement or, if there is no public announcement, within five days of the date of publication of this notice in accordance with 19 CFR 351.224(b).

Verification

Commerce is currently unable to conduct on-site verification of the information relied upon in making its final determination in this investigation. Accordingly, we intend to take additional steps in lieu of on-site verification. Commerce will notify interested parties of any additional documentation or information required.

Public Comment

Case briefs or other written comments on non-scope issues may be submitted to the Assistant Secretary for Enforcement and Compliance. Interested parties will be notified of a timeline for the submission of such case briefs and written comments at a later date. Rebuttal briefs, limited to issues raised in case briefs, may be submitted no later than seven days after the deadline date for case briefs.[8] Note that Commerce has temporarily modified certain of its requirements for serving documents containing business proprietary information until further notice.[9] Pursuant to 19 CFR 351.309(c)(2) and (d)(2), parties who submit case briefs or rebuttal briefs in this investigation are encouraged to submit with each argument: (1) A statement of the issue; (2) a brief summary of the argument; and (3) a table of authorities.

Pursuant to 19 CFR 351.310(c), interested parties who wish to request a hearing, limited to issues raised in the case and rebuttal briefs, must submit a written request to the Assistant Secretary for Enforcement and Compliance, U.S. Department of Commerce, within 30 days after the date of publication of this notice. Requests should contain the party's name, address, and telephone number, the number of participants, whether any participant is a foreign national, and a list of the issues to be discussed. If a request for a hearing is made, Commerce intends to hold the hearing at a time and date to be determined. Parties should confirm by telephone the date, time, and location of the hearing two days before the scheduled date.

Postponement of Final Determination and Extension of Provisional Measures

Section 735(a)(2) of the Act provides that a final determination may be postponed until not later than 135 days after the date of the publication of the preliminary determination if, in the event of an affirmative preliminary determination, a request for such postponement is made by exporters who account for a significant proportion of exports of the subject merchandise, or in the event of a negative preliminary determination, a request for such postponement is made by the petitioner. Section 351.210(e)(2) of Commerce's regulations requires that a request by exporters for postponement of the final determination be accompanied by a request for extension of provisional measures from a four-month period to a period not more than six months in duration.

On October 15, 2020, pursuant to 19 CFR 351.210(e), Zinus requested that Commerce postpone the final determination and that provisional measures be extended to a period not to exceed six months.[10] In accordance with section 735(a)(2)(A) of the Act and 19 CFR 351.210(b)(2)(ii), because: (1) The preliminary determination is affirmative; (2) the requesting exporter accounts for a significant proportion of exports of the subject merchandise; and (3) no compelling reasons for denial exist, Commerce is postponing the final determination and extending the provisional measures from a four-month period to a period not greater than six months. Accordingly, Commerce will make its final determination no later than 135 days after the date of publication of this preliminary determination.

International Trade Commission Notification

In accordance with section 733(f) of the Act, Commerce will notify the International Trade Commission (ITC) of its affirmative preliminary determination. If the final determination is affirmative, the ITC will determine before the later of 120 days after the date

[8] *See* 19 CFR 351.309; *see also* 19 CFR 351.303 (for general filing requirements).

[9] *See Temporary Rule Modifying AD/CVD Service Requirements Due to COVID–19,* 85 FR 17006 (March 26, 2020); and *Temporary Rule Modifying AD/CVD Service Requirements Due to COVID–19; Extension of Effective Period,* 85 FR 41363 (July 10, 2020).

[10] *See* Zinus's Letter, ''Mattresses from Indonesia: Request for Postponement of Final Determination,'' dated October 15, 2020.

of this preliminary determination or 45 days after the final determination whether these imports materially injure, or threaten material injury to, the U.S. industry.

Notification to Interested Parties

This determination is issued and published in accordance with sections 733(f) and 777(i)(1) of the Act and 19 CFR 351.205(c).

Dated: October 27, 2020.

Jeffrey I. Kessler,

Assistant Secretary for Enforcement and Compliance.

Appendix I

Scope of the Investigation

The products covered by this investigation are all types of youth and adult mattresses. The term ''mattress'' denotes an assembly of materials that at a minimum includes a ''core,'' which provides the main support system of the mattress, and may consist of innersprings, foam, other resilient filling, or a combination of these materials. Mattresses may also contain: (1) ''Upholstery,'' the material between the core and the top panel of the ticking on a single-sided mattress; or between the core and the top and bottom panel of the ticking on a double-sided mattress; and/or (2) ''ticking,'' the outermost layer of fabric or other material (*e.g.,* vinyl) that encloses the core and any upholstery, also known as a cover.

The scope of this investigation is restricted to only ''adult mattresses'' and ''youth mattresses.'' ''Adult mattresses'' are frequently described as ''twin,'' ''extra-long twin,'' ''full,'' ''queen,'' ''king,'' or ''California king'' mattresses. ''Youth mattresses'' are typically described as ''crib,'' ''toddler,'' or ''youth'' mattresses. All adult and youth mattresses are included regardless of size and size description.

The scope encompasses all types of ''innerspring mattresses,'' ''non-innerspring mattresses,'' and ''hybrid mattresses.'' ''Innerspring mattresses'' contain innersprings, a series of metal springs joined together in sizes that correspond to the dimensions of mattresses. Mattresses that contain innersprings are referred to as ''innerspring mattresses'' or ''hybrid mattresses.'' ''Hybrid mattresses'' contain two or more support systems as the core, such as layers of both memory foam and innerspring units.

''Non-innerspring mattresses'' are those that do not contain any innerspring units. They are generally produced from foams (*e.g.,* polyurethane, memory (viscoelastic), latex foam, gel- infused viscoelastic (gel foam), thermobonded polyester, polyethylene) or other resilient filling.

Mattresses covered by the scope of this investigation may be imported independently, as part of furniture or furniture mechanisms (*e.g.,* convertible sofa bed mattresses, sofa bed mattresses imported with sofa bed mechanisms, corner group mattresses, day-bed mattresses, roll-away bed mattresses, high risers, trundle bed mattresses, crib mattresses), or as part of a set in combination with a ''mattress foundation.'' ''Mattress foundations'' are any base or support for a mattress. Mattress foundations are commonly referred to as ''foundations,'' ''boxsprings,'' ''platforms,'' and/or ''bases.'' Bases can be static, foldable, or adjustable. Only the mattress is covered by the scope if imported as part of furniture, with furniture mechanisms, or as part of a set in combination with a mattress foundation.

Excluded from the scope of this investigation are ''futon'' mattresses. A ''futon'' is a bi-fold frame made of wood, metal, or plastic material, or any combination thereof, that functions as both seating furniture (such as a couch, love seat, or sofa) and a bed. A ''futon mattress'' is a tufted mattress, where the top covering is secured to the bottom with thread that goes completely through the mattress from the top through to the bottom, and it does not contain innersprings or foam. A futon mattress is both the bed and seating surface for the futon.

Also excluded from the scope are airbeds (including inflatable mattresses) and waterbeds, which consist of air- or liquid-filled bladders as the core or main support system of the mattress.

Also excluded is certain multifunctional furniture that is convertible from seating to sleeping, regardless of filler material or components, where that filler material or components are upholstered, integrated into the design and construction of, and inseparable from, the furniture framing, and the outermost layer of the multifunctional furniture converts into the sleeping surface. Such furniture may, and without limitation, be commonly referred to as ''convertible sofas,'' ''sofabeds,'' ''sofa chaise sleepers,'' ''futons,'' ''ottoman sleepers'' or a like description.

Also excluded from the scope of this investigation are any products covered by the existing antidumping duty orders on uncovered innerspring units from China or Vietnam. *See Uncovered Innerspring Units from the People's Republic of China: Notice of Antidumping Duty Order,* 74 FR 7661 (February 19, 2009); *Uncovered Innerspring Units from the Socialist Republic of Vietnam,* 73 FR 75391 (December 11, 2008).

Also excluded from the scope of this investigation are bassinet pads with a nominal length of less than 39 inches, a nominal width less than 25 inches, and a nominal depth of less than 2 inches.

Additionally, also excluded from the scope of this investigation are ''mattress toppers.'' A ''mattress topper'' is a removable bedding accessory that supplements a mattress by providing an additional layer that is placed on top of a mattress. Excluded mattress toppers have a height of four inches or less.

The products subject to this investigation are currently properly classifiable under HTSUS subheadings: 9404.21.0010, 9404.21.0013, 9404.29.1005, 9404.29.1013, 9404.29.9085, and 9404.29.9087. Products subject to this investigation may also enter under HTSUS subheadings: 9404.21.0095, 9404.29.1095, 9404.29.9095, 9401.40.0000, and 9401.90.5081. Although the HTSUS subheadings are provided for convenience and customs purposes, the written description of the merchandise subject to this investigation is dispositive.

Appendix II

List of Topics Discussed in the Preliminary Decision Memorandum

I. Summary
II. Background
III. Period of Investigation
IV. Discussion of the Methodology
V. Particular Market Situation
VI. Recommendation

[FR Doc. 2020–24297 Filed 11–2–20; 8:45 am]

BILLING CODE 3510–DS–P

DEPARTMENT OF COMMERCE

National Institute of Standards and Technology

[Docket No. [201023–0280]

Request for Comments on Federal Information Processing Standard (FIPS) 201–3

AGENCY: National Institute of Standards and Technology (NIST), Commerce.

ACTION: Notice; request for comments.

SUMMARY: The National Institute of Standards and Technology (NIST) requests comments on Draft Federal Information Processing Standard (FIPS) 201–3, Personal Identity Verification (PIV) of Federal Employees and Contractors (Standard). This Standard defines common credentials and authentication mechanisms offering varying degrees of security for both logical and physical access applications. The draft revision proposes changes to FIPS 201–2, Standard for Personal Identity Verification of Federal Employees and Contractors to include: Expanding specification on the use of additional PIV credentials known as derived PIV credentials, procedures for supervised remote identity proofing, the use of federation as a means for a relying system to interoperate with PIV credentials issued by other agencies, alignment with the current practice/policy of the Federal Government and specific changes requested by Federal agencies and implementers. Before recommending these proposed changes to the Secretary of Commerce for review and approval, NIST invites comments from all interested parties.

DATES: Comments on FIPS 201–3 must be received on or before February 1, 2021.

ADDRESSES: The draft of FIPS 201–3 is available for review and comment on the NIST Computer Security Resource Center website at *https://csrc.nist.gov* and at *https://www.regulations.gov/.* Comments on FIPS 201–3 may be sent

electronically to *piv_comments@nist.gov* with ''Comment on FIPS 201–3'' in the subject line or may be submitted via *https://www.regulations.gov/.* Comments may also be submitted on the project repository at *https://github.com/usnistgov/FIPS201.* Written comments may be submitted by mail to Information Technology Laboratory, ATTN: FIPS 201–3 Comments, National Institute of Standards and Technology, 100 Bureau Drive, Mail Stop 8930, Gaithersburg, MD 20899–8930.

All submissions, including attachments and other supporting materials, will become part of the public record and subject to public disclosure. NIST reserves the right to publish relevant comments, unedited and in their entirety. Relevant comments received by the deadline will be published electronically at *https://csrc.nist.gov/, https://www.regulations.gov/* and the project repository at *https://github.com/usnistgov/FIPS201* without change or redaction, so commenters should not include information they do not wish to be posted. Personal information, such as account numbers or Social Security numbers, or names of other individuals, should not be included. Do not submit confidential business information or otherwise sensitive or protected information. Comments that contain profanity, vulgarity, threats, or other inappropriate language or content will not be posted or considered.

FOR FURTHER INFORMATION CONTACT: Hildegard Ferraiolo, National Institute of Standards and Technology, 100 Bureau Drive, Mail Stop Number 8930, Gaithersburg, MD 20899–8930, email: *hferraio@nist.gov,* phone: (301) 975–6972.

SUPPLEMENTARY INFORMATION: FIPS 201 defines common credentials and authentication mechanisms offering varying degrees of security for both logical and physical access applications. Federal departments and agencies will determine the level of security and authentication mechanisms appropriate for their respective applications. The scope of this Standard is limited to authentication of an individual's identity. Authorization and access control decisions are outside the scope of this Standard. Moreover, requirements for a temporary credential used until a new or replacement PIV credential arrives are out of scope of this Standard.

In accordance with NIST policy, FIPS 201–2 (the version of the Standard currently in effect) was due for review in 2018. In consideration of changes in the environment over the last several years and of specific requests for changes from Federal agencies, NIST determined that a revision of FIPS 201–2 is warranted. NIST has received numerous change requests, some of which, after analysis and coordination with the Office of Management and Budget (OMB), the Office of Personnel Management (OPM), and other Federal agencies, are incorporated in the Draft FIPS 201–3. Other change requests incorporated in the Draft FIPS 201–3 result from the 2019 Business Requirements Meeting held at NIST. The meeting focused on business requirements of Federal agencies. The proposed changes in Draft FIPS 201–3 are:

- Alignment with SP 800–63–3 language and terms.
- Updated OMB policy guidelines references from rescinded OMB memorandum M–04–04 to new guidelines in OMB memorandum M–19–17.
- Updated process for binding and termination of derived PIV credentials with PIV account.
- Updated credentialing requirements for issuance of PIV Cards based on OPM guidance.
- Added requirements for supervised remote identity proofing and PIV Card maintenance.
- Modified identity proofing requirements to reflect updated list of accepted documents.
- Updated guidance on validation of identity proofing documents.
- Updated guidance on collection of biometric data for credentialing.
- Clarified multi-session proofing and enrollment.
- Clarified biometric modalities for proofing and authentication.
- Provided clarification on grace periods.
- Deprecated PIV National Agency Check with Written Inquiries (NACI) indicator (background investigation indicator).
- Updated system description and associated diagrams.
- Generalized chain of trust records to enrollment records and made these records required.
- Deprecated the use of magnetic stripes and bar codes on PIV Cards.
- Linked expiration of content signing certificate with card authentication certificate.
- Revised PIN requirements based on SP 800–63B guidelines.
- Removed requirement for support of legacy PKIs.
- Expressed authentication assurance levels in terms of Physical Assurance Level (PAL) and Authenticator Assurance Level (AAL).
- Removed previously deprecated Cardholder Unique Identifier (CHUID) authentication mechanisms. The CHUID data element has not been deprecated and continues to be mandatory.
- Deprecated symmetric card authentication key and associated authentication mechanism (SYM–CAK).
- Added support for secure messaging authentication mechanism (SM–AUTH).
- Deprecated visual authentication mechanism (VIS).
- Added section discussing federation in relationship to PIV credentials.

A public workshop will be held for FIPS 201–3. The specific date will be determined and posted on the NIST Personal Identity Verification (PIV) website: *https://csrc.nist.gov/Projects/PIV.* Before recommending these proposed changes to the Secretary of Commerce for review and approval, NIST invites comments from all interested parties.

Authority: 44 U.S.C. 3553(f)(1), 15 U.S.C. 278g–3.

Kevin Kimball,

Chief of Staff.

[FR Doc. 2020–24283 Filed 11–2–20; 8:45 am]

BILLING CODE 3510–13–P

DEPARTMENT OF COMMERCE

National Oceanic and Atmospheric Administration

Ocean Exploration Advisory Board (OEAB) Meeting

AGENCY: Office of Ocean Exploration and Research (OER), National Oceanic and Atmospheric Administration (NOAA), Department of Commerce (DOC).

ACTION: Notice of public meeting.

SUMMARY: This notice sets forth the schedule and proposed agenda for a meeting of the Ocean Exploration Advisory Board (OEAB). OEAB members will discuss and provide advice on Federal ocean exploration programs, with a particular emphasis on the topics identified in the section on Matters to Be Considered.

DATES: The announced meeting is scheduled for Thursday, December 10, 2020, from 1:00 p.m. to 5:00 p.m. EST.

ADDRESSES: This will be a virtual meeting. Information about how to participate will be posted to the OEAB website at *http://oeab.noaa.gov.*

FOR FURTHER INFORMATION CONTACT: Mr. David McKinnie, Designated Federal Officer, Ocean Exploration Advisory

Board, National Oceanic and Atmospheric Administration, *david.mckinnie@noaa.gov* or (206) 526–6950.

SUPPLEMENTARY INFORMATION: NOAA established the OEAB under the Federal Advisory Committee Act (FACA) and legislation that gives the agency statutory authority to operate an ocean exploration program and to coordinate a national program of ocean exploration. The OEAB advises NOAA leadership on strategic planning, exploration priorities, competitive ocean exploration grant programs, and other matters as the NOAA Administrator requests.

OEAB members represent government agencies, the private sector, academic institutions, and not-for-profit institutions involved in all facets of ocean exploration—from advanced technology to citizen exploration.

In addition to advising NOAA leadership, NOAA expects the OEAB to help to define and develop a national program of ocean exploration—a network of stakeholders and partnerships advancing national priorities for ocean exploration.

Matters To Be Considered: The OEAB will discuss the following topics: (1) NOAA Office of Ocean Exploration and Research program review; (2) NOAA response to OEAB October 2020 letter; and (3) other matters as described in the agenda. The agenda and other meeting materials will be made available on the OEAB website at *http://oeab.noaa.gov.*

Status: The meeting will be open to the public with a 15-minute public comment period on Thursday, December 10, 2020, from 3:00 p.m. to 3:15 p.m. EST (please check the final agenda on the OEAB website to confirm the time). The public may listen to the meeting and provide comments during the public comment period via teleconference. Participation information will be on the meeting agenda on the OEAB website.

The OEAB expects that public statements at its meetings will not be repetitive of previously submitted verbal or written statements. In general, each individual or group making a verbal presentation will be limited to three minutes. The Designated Federal Officer must receive written comments by December 4, 2020, to provide sufficient time for OEAB review. Written comments received after December 4, 2020, will be distributed to the OEAB but may not be reviewed prior to the meeting date.

Special Accomodations: Requests for sign language interpretation or other auxiliary aids should be directed to the Designated Federal Officer by December 4, 2020.

David Holst,

Director Chief Financial Officer/CAO, Office of Oceanic and Atmospheric Research, National Oceanic and Atmospheric Administration.

[FR Doc. 2020–24331 Filed 11–2–20; 8:45 am]

BILLING CODE 3510–KA–P

COMMODITY FUTURES TRADING COMMISSION

Privacy Act of 1974; System of Records

AGENCY: Commodity Futures Trading Commission.

ACTION: Notice of a modified system of records.

SUMMARY: The Commodity Futures Trading Commission (CFTC or Commission) is modifying CFTC–50, LabCFTC, a system of records under the Privacy Act of 1974.

DATES: In accordance with 5 U.S.C. 552(e)(4) and (11), this notice will go in to effect without further notice on November 3, 2020 unless otherwise revised pursuant to comments received. New routine uses will go in to effect on December 3, 2020. Comments must be received on or before December 3, 2020.

ADDRESSES: You may submit comments identified as pertaining to ''LabCFTC'' by any of the following methods:

- *CFTC Website: https://comments.cftc.gov.* Follow the instructions for submitting comments through the Comments Online process on the website.
- *Mail:* Christopher J. Kirkpatrick, Secretary of the Commission, Commodity Futures Trading Commission, Three Lafayette Centre, 1155 21st Street NW, Washington, DC 20581.
- *Hand Delivery/Courier:* Same as Mail, above.

Please submit your comments using only one method.

All comments must be submitted in English, or if not, accompanied by an English translation. Comments will be posted as received to *https://www.cftc.gov.* You should submit only information that you wish to make available publicly. If you wish the Commission to consider information that you believe is exempt from disclosure under the Freedom of Information Act (FOIA), a petition for confidential treatment of the exempt information may be submitted according to the procedures established in § 145.9 of the Commission's regulations, 17 CFR 145.9.

The Commission reserves the right, but shall have no obligation, to review, pre-screen, filter, redact, refuse, or remove any or all of a submission from *https://www.cftc.gov* that it may deem to be inappropriate for publication, such as obscene language. All submissions that have been redacted or removed that contain comments on the merits of the notice will be retained in the comment file and will be considered as required under all applicable laws, and may be accessible under the FOIA.

FOR FURTHER INFORMATION CONTACT: Chief Privacy Officer, Charlie Cutshall, 202–418–5833, *privacy@cftc.gov,* Office of the Executive Director, Commodity Futures Trading Commission, Three Lafayette Centre, 1155 21st Street NW, Washington, DC 20581.

SUPPLEMENTARY INFORMATION: In service to the CFTC's goal of encouraging innovation and enhancing the regulatory experience for market participants at home and abroad, the CFTC established LabCFTC, an official operating office that reports directly to the Chairman of the Commission. LabCFTC's mission is to promote responsible innovation among the financial industry, stakeholders, and policymakers by:

- Advancing policy and regulation in financial innovation;
- Facilitating dialogue between innovators and those within the CFTC on financial and technological innovations;
- Educating internal and external stakeholders on financial technology and innovation in the financial markets to identify how innovations are being used; and
- Coordinating internally and externally with International, Federal, and State regulators, organizations, and associations.

LabCFTC is designed to make the CFTC more accessible to FinTech innovators and serves as a platform to inform the Commission's understanding of new technologies. LabCFTC allows FinTech innovators to engage with the CFTC, learn about the CFTC's regulatory framework, and obtain feedback and information on the implementation of innovative technology ideas for the market. Further, LabCFTC functions as an information source for the Commission and CFTC staff on responsible FinTech innovation that may influence policy development. LabCFTC allows FinTech innovators to engage with the CFTC, learn about the CFTC's regulatory framework, and obtain feedback and information on the implementation of innovative technology ideas for the market.

I. Modifications to CFTC–50, LabCFTC

The Commodity Futures Trading Commission (CFTC or Commission) is modifying CFTC–50, LabCFTC, a system of records under the Privacy Act of 1974, to include information collected under the American Innovation and Competitiveness Act (AICA), Public Law 114–329. The notice modifies the categories of individuals to include individuals participating in and supporting competitions and adds two routine uses to cover—(1) the disclosure of records to competition judges and (2) to cover the disclosure of competition results to the public. In addition, the Commission is taking this opportunity to update the policies and practices for retention and disposal of records to include the disposition authority number.

II. The Privacy Act

Under the Privacy Act of 1974, 5 U.S.C. 552a, a ''system of records'' is defined as any group of records under the control of a Federal government agency from which information about individuals is retrieved by name or by some identifying number, symbol, or other identifying particular assigned to the individual. The Privacy Act establishes the means by which government agencies must collect, maintain, and use information about an individual in a government system of records.

Each government agency is required to publish a notice in the **Federal Register** in which the agency identifies and describes each system of records it maintains, the reasons why the agency uses the information therein, the routine uses for which the agency will disclose such information outside the agency, and how individuals may exercise their rights under the Privacy Act.

In accordance with 5 U.S.C. 552a(r), CFTC has provided a report of this modified system of records to the Office of Management and Budget and to Congress.

SYSTEM NAME AND NUMBER:

LabCFTC; CFTC–50.

SECURITY CLASSIFICATION:

Unclassified.

SYSTEM LOCATION:

This system is located at the Commodity Futures Trading Commission, Three Lafayette Centre, 1155 21st Street NW, Washington, DC 20581.

SYSTEM MANAGER(S):

Office of the Charmain, Commodity Futures Trading Commission, Three Lafayette Centre, 1155 21st Street NW, Washington, DC 20581.

AUTHORITY FOR MAINTENANCE OF THE SYSTEM:

The collection of this information is authorized under 7 U.S.C. 5(b), and the rules promulgated thereunder. Information collected to facilitate competitions is authorized under the American Innovation and Competitiveness Act (AICA) Public Law 114–329.

PURPOSE(S) OF THE SYSTEM:

The information in the system is being collected to assist CFTC in communicating with interested parties to encourage responsible FinTech innovation in the markets CFTC oversees and to help accelerate Commission engagement with FinTech solutions that enable the CFTC to carry out its mission responsibilities more effectively and efficiently. The information collected facilitates communications between FinTech innovators and the CFTC to enable innovators to learn about the CFTC's regulatory framework and to obtain feedback and information on the implementation of technology ideas for the market. This information also may help initiate the adoption of new technology within the CFTC's own mission activities through collaboration with FinTech industry and CFTC market participants.

CATEGORIES OF INDIVIDUALS COVERED BY THE SYSTEM:

Individuals covered by this system include individuals submitting requests or inquiries and other information to CFTC through LabCFTC and individuals participating in, and supporting competitions held by LabCFTC.

CATEGORIES OF RECORDS IN THE SYSTEM:

The system of records includes information that contains: Individual's name, physical address, telephone numbers (work, home, mobile), email addresses, employer, job title, relevant work experience, CFTC status (registrant, non-registrant), organization type (S Corporation, Limited Liability Corporation, etc.), and other business, business partner, or technology information that may be linked or linkable to an individual.

RECORD SOURCE CATEGORIES:

Information in this system is obtained directly from the individual who is submitting the information.

ROUTINE USES OF RECORDS MAINTAINED IN THE SYSTEM, INCLUDING CATEGORIES OF USERS AND THE PURPOSES OF SUCH USES:

These records and information in these records may be used: (a) To disclose information to other financial regulators to facilitate regulatory discussions around technology innovations; (b) To disclose information to external committees that advise the CFTC on the impact and implications of technological innovations on financial services and the derivatives markets; (c) to disclose during conferences or other events consistent within the purpose of 7 U.S.C. 5(b); (d) To disclose to competition judges who may include: staff from other federal agencies, or regulatory authorities (state, non-US government, inter-governmental); business/industry participants; academics; and individual experts; (e) To disclose certain competition result information to the public; (f) To disclose in any administrative proceeding before the Commission, in any injunctive action authorized under the Commodity Exchange Act, or in any other action or proceeding in which the Commission or its staff participates as a party or the Commission participates as amicus curiae; (g) To disclose to Federal, State, local, territorial, Tribal, or foreign agencies for use in meeting their statutory or regulatory requirements; (h) To disclose to any ''registered entity,'' as defined in section 1a of the Commodity Exchange Act, 7 U.S.C. 1, *et seq.* (''the Act''), to the extent disclosure is authorized and will assist the registered entity in carrying out its responsibilities under the Act. Information may also be disclosed to any registered futures association registered under section 17 of the Act to assist it in carrying out its self-regulatory responsibilities under the Act, and to any national securities exchange or national securities association registered with the Securities and Exchange Commission to assist those organizations in carrying out their self-regulatory responsibilities under the Securities Exchange Act of 1934, 15 U.S.C. 78a, *et seq.;* (i) To disclose to anyone during the course of a Commission investigation if Commission staff has reason to believe that the person to whom it is disclosed may have further information about matters relevant to the subject of the investigation; (j) To disclose in a public report issued by the Commission following an investigation, to the extent that the disclosure is authorized under section 8 of the Commodity Exchange Act, 7 U.S.C. 12; (k) To disclose to contractors, grantees, volunteers, experts, students, and others performing or working on a contract, service, grant, cooperative agreement, or job for the Federal government when necessary to accomplish an agency function; (l) To disclose to Congress upon its request,

acting within the scope of its jurisdiction, pursuant to the Commodity Exchange Act, 7 U.S.C. 1 *et seq.,* and the rules and regulations promulgated thereunder; (m) To disclose to appropriate agencies, entities, and persons when (1) the Commission suspects or has confirmed that there has been a breach of the system of records; (2) the Commission has determined that as a result of the suspected or confirmed breach there is a risk of harm to individuals, the Commission (including its information systems, programs, and operations), the Federal Government, or national security; and (3) the disclosure made to such agencies, entities, and persons is reasonably necessary to assist in connection with the Commission's efforts to respond to the suspected or confirmed breach or to prevent, minimize, or remedy such harm; or (n) To disclose to another Federal agency or Federal entity, when the Commission determines that information from this system of records is reasonably necessary to assist the recipient agency or entity in (1) responding to a suspected or confirmed breach or (2) preventing, minimizing, or remedying the risk of harm to individuals, the recipient agency or entity (including its information systems, programs, and operations), the Federal Government, or national security, resulting from a suspected or confirmed breach.

POLICIES AND PRACTICES FOR STORAGE OF RECORDS:

The LabCFTC system of records stores records in this system electronically or on paper in secure facilities. Electronic records are stored on the Commission's secure network and other electronic media as needed, such as encrypted hard drives and back-up media.

POLICIES AND PRACTICES FOR RETRIEVAL OF RECORDS:

Information covered by this system of records notice may be retrieved by name, email address, physical address, or other unique individual identifiers using a keyword search.

POLICIES AND PRACTICES FOR RETENTION AND DISPOSAL OF RECORDS:

Records in this system will be maintained in accordance with the External Outreach—Education, Awareness, and Innovation records schedule, which requires that records be closed at the end of the calendar year and then destroyed seven years after closed. The disposition authority number is DAA–0180–2018–0007–0002.

ADMINISTRATIVE, TECHNICAL, AND PHYSICAL SAFEGUARDS:

Records are protected from unauthorized access and improper use through administrative, technical, and physical security measures. Administrative safeguards include written guidelines on handling LabCFTC information. All CFTC personnel are subject to CFTC agency-wide procedures for safeguarding personally identifiable information and receive annual privacy and security training. Technical security measures within CFTC include restrictions on computer access to authorized individuals who have a legitimate need to know the information; required use of strong passwords that are frequently changed; multi-factor authentication for remote access and access to many CFTC network components; use of encryption for certain data types and transfers; firewalls and intrusion detection applications; and regular review of security procedures and best practices to enhance security. The technology also has a time-out function that requires users to re-access and input information if the time limit expires. Physical safeguards include restrictions on building access to authorized individuals, 24-hour security guard service, and maintenance of records in lockable offices and filing cabinets.

RECORD ACCESS PROCEDURES:

Individuals seeking to determine whether this system of records contains information about themselves or seeking access to records about themselves in this system of records should address written inquiries to the Office of General Counsel, Commodity Futures Trading Commission, Three Lafayette Centre, 1155 21st Street NW, Washington, DC 20581. See 17 CFR 146.3 for full details on what to include in a Privacy Act access request.

CONTESTING RECORD PROCEDURES:

Individuals contesting the content of records about themselves contained in this system of records should address written inquiries to the Office of General Counsel, Commodity Futures Trading Commission, Three Lafayette Centre, 1155 21st Street NW, Washington, DC 20581. See 17 CFR 146.8 for full details on what to include in a Privacy Act amendment request.

NOTIFICATION PROCEDURES:

Individuals seeking notification of any records about themselves contained in this system of records should address written inquiries to the Office of General Counsel, Commodity Futures Trading Commission, Three Lafayette Centre, 1155 21st Street NW, Washington, DC 20581. See 17 CFR 146.3 for full details on what to include in a Privacy Act notification request.

EXEMPTIONS PROMULGATED FOR THE SYSTEM:

None.

HISTORY:

A previous version of this SORN was published in the **Federal Register** on January 2, 2018 at 83 FR 104.

Issued in Washington, DC, on October 29, 2020, by the Commission.

Robert Sidman,

Deputy Secretary of the Commission.

[FR Doc. 2020–24351 Filed 11–2–20; 8:45 am]

BILLING CODE 6351–01–P

BUREAU OF CONSUMER FINANCIAL PROTECTION

Credit Union Advisory Council Meeting

AGENCY: Bureau of Consumer Financial Protection.

ACTION: Notice of public meeting.

SUMMARY: Under the Federal Advisory Committee Act (FACA), this notice sets forth the announcement of a public meeting of the Credit Union Advisory Council (CUAC or Council) of the Bureau of Consumer Financial Protection (Bureau). The notice also describes the functions of the Council.

DATES: The meeting date is Wednesday, November 18, 2020, from approximately 1:00 p.m. to 5:30 p.m. eastern daylight time. This meeting will be held virtually and is open to the general public. Members of the public will receive the agenda and dial-in information when they RSVP.

FOR FURTHER INFORMATION CONTACT: Kim George, Outreach and Engagement Associate, Consumer Advisory Board and Councils Office, External Affairs, at 202–450–8617, *CFPB_CABandCouncilsEvents@cfpb.gov.* If you require this document in an alternative electronic format, please contact *CFPB_Accessibility@cfpb.gov.*

SUPPLEMENTARY INFORMATION:

I. Background

Section 2 of the CUAC Charter provides that pursuant to the executive and administrative powers conferred on the Bureau by section 1012 of the Dodd-Frank Wall Street Reform and Consumer Protection Act (Dodd-Frank Act), the Director established the Credit Union Advisory Council under agency authority.

Section 3 of the CUAC Charter states: ''The purpose of the Advisory Council

is to advise the Bureau in the exercise of its functions under the Federal consumer financial laws as they pertain to credit unions with total assets of $10 billion or less.''

II. Agenda

The CUAC will discuss broad policy matters related to the Bureau's Unified Regulatory Agenda and general scope of authority; including discussions on recent Bureau initiatives and mortgage market trends and themes specifically related to impacts from COVID–19.

Persons who need a reasonable accommodation to participate should contact *CFPB_504Request@cfpb.gov,* 202–435–9EEO, 1–855–233–0362, or 202–435–9742 (TTY) at least ten (10) business days prior to the meeting or event to request assistance. The request must identify the date, time, location, and title of the meeting or event, the nature of the assistance requested, and contact information for the requester. The Bureau will strive to provide but cannot guarantee that accommodation will be provided for late requests.

Written comments will be accepted from interested members of the public and should be sent to *CFPB_CABandCouncilsEvents@cfpb.gov,* a minimum of seven (7) days in advance of the meeting. The comments will be provided to the CUAC members for consideration. Individuals who wish to join the CUAC must RSVP via this link *https://surveys.consumerfinance.gov/jfe/form/SV_bBJGyA6E0Idj8gZ* by noon, November 17, 2020. Members of the public must RSVP by the due date.

III. Availability

The Council's agenda will be made available to the public on Tuesday, November 17, 2020 via *consumerfinance.gov.* Individuals should express in their RSVP if they require a paper copy of the agenda.

A recording and summary of this meeting will be available after the meeting on the Bureau's website *consumerfinance.gov.*

Karla Carnemark,

Acting Chief of Staff, Bureau of Consumer Financial Protection.

[FR Doc. 2020–24229 Filed 11–2–20; 8:45 am]

BILLING CODE 4810–AM–P

BUREAU OF CONSUMER FINANCIAL PROTECTION

Consumer Advisory Board Meeting

AGENCY: Bureau of Consumer Financial Protection.

ACTION: Notice of public meeting.

SUMMARY: Under the Federal Advisory Committee Act (FACA), this notice sets forth the announcement of a public meeting of the Consumer Advisory Board (CAB or Board) of the Bureau of Consumer Financial Protection (Bureau). The notice also describes the functions of the Board.

DATES: The meeting date is Wednesday, November 18, 2020, from approximately 1:00 p.m. to 5:30 p.m. eastern daylight time. This meeting will be held virtually and is open to the general public. Members of the public will receive the agenda and dial-in information when they RSVP.

FOR FURTHER INFORMATION CONTACT: Kim George, Outreach and Engagement Associate, Advisory Board and Councils Office, External Affairs, at 202–450–8617, or email: *CFPB_CABandCouncilsEvents@cfpb.gov.* If you require this document in an alternative electronic format, please contact *CFPB_Accessibility@cfpb.gov.*

SUPPLEMENTARY INFORMATION:

I. Background

Section 3 of the Charter of the Board states that: The purpose of the Board is outlined in section 1014(a) of the Dodd-Frank Wall Street Reform and Consumer Protection Act, which states that the Board shall ''advise and consult with the Bureau in the exercise of its functions under the Federal consumer financial laws'' and ''provide information on emerging practices in the consumer financial products or services industry, including regional trends, concerns, and other relevant information.''

To carry out the Board's purpose, the scope of its activities shall include providing information, analysis, and recommendations to the Bureau. The Board will generally serve as a vehicle for market intelligence and expertise for the Bureau. Its objectives will include identifying and assessing the impact on consumers and other market participants of new, emerging, and changing products, practices, or services.

II. Agenda

The CAB will discuss broad policy matters related to the Bureau's Unified Regulatory Agenda and general scope of authority; including discussions on recent Bureau initiatives and mortgage market trends and themes specifically related to impacts related to COVID–19.

Persons who need a reasonable accommodation to participate should contact *CFPB_504Request@cfpb.gov,* 202–435–9EEO, 1–855–233–0362, or 202–435–9742 (TTY) at least ten (10) business days prior to the meeting or event to request assistance. The request must identify the date, time, location, and title of the meeting or event, the nature of the assistance requested, and contact information for the requester. The Bureau will strive to provide, but cannot guarantee that accommodation will be provided for late requests.

Written comments will be accepted from interested members of the public and should be sent to *CFPB_CABandCouncilsEvents@cfpb.gov,* a minimum of seven (7) days in advance of the meeting. The comments will be provided to the CAB members for consideration. Individuals who wish to join the Board must RSVP via this link *https://surveys.consumerfinance.gov/jfe/form/SV_bBJGyA6E0Idj8gZ* by noon, November 17, 2020. Members of the public must RSVP by the due date.

III. Availability

The Board's agenda will be made available to the public on Tuesday, November 17, 2020, via *consumerfinance.gov.* Individuals should express in their RSVP if they require a paper copy of the agenda.

A recording and summary of this meeting will be available after the meeting on the Bureau's website *consumerfinance.gov.*

Karla Carnemark,

Acting Chief of Staff, Bureau of Consumer Financial Protection.

[FR Doc. 2020–24225 Filed 11–2–20; 8:45 am]

BILLING CODE 4810–AM–P

BUREAU OF CONSUMER FINANCIAL PROTECTION

Community Bank Advisory Council Meeting

AGENCY: Bureau of Consumer Financial Protection.

ACTION: Notice of public meeting.

SUMMARY: Under the Federal Advisory Committee Act (FACA), this notice sets forth the announcement of a public meeting of the Community Bank Advisory Council (CBAC or Council) of the Bureau of Consumer Financial Protection (Bureau). The notice also describes the functions of the Council.

DATES: The meeting date is Wednesday, November 18, 2020, from approximately 1:00 p.m. to 5:30 p.m. eastern daylight time. This meeting will be held virtually and is open to the general public. Members of the public will receive the agenda and dial-in information when they RSVP.

FOR FURTHER INFORMATION CONTACT: Kim George, Outreach and Engagement

Associate, Consumer Advisory Board and Councils Office, External Affairs, at 202–450–8617, *CFPB_CABandCouncilsEvents@cfpb.gov.* If you require this document in an alternative electronic format, please contact *CFPB_Accessibility@cfpb.gov.*

SUPPLEMENTARY INFORMATION:

I. Background

Section 2 of the CBAC Charter provides that pursuant to the executive and administrative powers conferred on the Bureau by section 1012 of the Dodd-Frank Wall Street Reform and Consumer Protection Act, the Director established the Community Bank Advisory Council under agency authority.

Section 3 of the CBAC Charter states: ''The purpose of the Advisory Council is to advise the Bureau in the exercise of its functions under the Federal consumer financial laws as they pertain to community banks with total assets of $10 billion or less.''

II. Agenda

The CBAC will discuss broad policy matters related to the Bureau's Unified Regulatory Agenda and general scope of authority; including discussions on recent Bureau initiatives and mortgage market trends and themes specifically related to impacts from COVID–19.

Persons who need a reasonable accommodation to participate should contact *CFPB_504Request@cfpb.gov,* 202–435–9EEO, 1–855–233–0362, or 202–435–9742 (TTY) at least ten (10) business days prior to the meeting or event to request assistance. The request must identify the date, time, location, and title of the meeting or event, the nature of the assistance requested, and contact information for the requester. The Bureau will strive to provide but cannot guarantee that accommodation will be provided for late requests.

Written comments will be accepted from interested members of the public and should be sent to *CFPB_CABandCouncilsEvents@cfpb.gov,* a minimum of seven (7) days in advance of the meeting. The comments will be provided to the CBAC members for consideration. Individuals who wish to join the Council must RSVP via this link *https://surveys.consumerfinance.gov/jfe/form/SV_bBJGyA6E0Idj8gZ* by noon, November 17, 2020. Members of the public must RSVP by the due date.

III. Availability

The Council's agenda will be made available to the public on Tuesday, November 17, 2020, via *consumerfinance.gov.* Individuals should express in their RSVP if they require a paper copy of the agenda.

A recording and summary of this meeting will be available after the meeting on the Bureau's website *consumerfinance.gov.*

Karla Carnemark,

Acting Chief of Staff, Bureau of Consumer Financial Protection.

[FR Doc. 2020–24226 Filed 11–2–20; 8:45 am]

BILLING CODE 4810–AM–P

BUREAU OF CONSUMER FINANCIAL PROTECTION

Academic Research Council Meeting

AGENCY: Bureau of Consumer Financial Protection.

ACTION: Notice of public meeting.

SUMMARY: Under the Federal Advisory Committee Act (FACA), this notice sets forth the announcement of a public meeting of the Academic Research Council (ARC or Council) of the Bureau of Consumer Financial Protection (Bureau). The notice also describes the functions of the Council.

DATES: The meeting date is Friday, November 20, 2020, from approximately 1:30 p.m. to 4:30 p.m. eastern daylight time. This meeting will be held virtually and is open to the general public. Members of the public will receive the agenda and dial-in information when they RSVP.

FOR FURTHER INFORMATION CONTACT: Kim George, Outreach and Engagement Associate, at 202–450–8617, or *CFPB_CABandCouncilsEvents@cfpb.gov.* If you require this document in an alternative electronic format, please contact *CFPB_Accessibility@cfpb.gov.*

SUPPLEMENTARY INFORMATION:

I. Background

Section 2 of the of the ARC Charter provides that pursuant to the executive and administrative powers conferred on the Bureau by section 1012 of the Dodd-Frank Wall Street Reform and Consumer Protection Act (Dodd-Frank Act), the Director established the Academic Research Council under agency authority. Section 3 of the ARC Charter states: The committee will (1) provide the Bureau with advice about its strategic research planning process and research agenda, including views on the research that the Bureau should conduct relating to consumer financial products or services, consumer behavior, cost-benefit analysis, or other topics to enable the agency to further its statutory purposes and objectives; and (2) provide the Office of Research with technical advice and feedback on research methodologies, data collection strategies, and methods of analysis, including methodologies and strategies for quantifying the costs and benefits of regulatory actions.

II. Agenda

The ARC will discuss broad policy matters related to the Bureau's Unified Regulatory Agenda and general scope of authority. The ARC will also discuss research methodologies and assist with providing direction for consumer finance research at the Bureau.

Persons who need a reasonable accommodation to participate should contact *CFPB_504Request@cfpb.gov,* 202–435–9EEO, 1-855–233–0362, or 202–435–9742 (TTY) at least ten (10) business days prior to the meeting or event to request assistance. The request must identify the date, time, location, and title of the meeting or event, the nature of the assistance requested, and contact information for the requester. The Bureau will strive to provide but cannot guarantee that accommodation will be provided for late requests.

Written comments will be accepted from interested members of the public and should be sent to *CFPB_CABandCouncilsEvents@cfpb.gov,* a minimum of seven (7) days in advance of the meeting. The comments will be provided to the ARC members for consideration. Individuals who wish to join the ARC must RSVP via this link *https://surveys.consumerfinance.gov/jfe/form/SV_eOQbgq16wCi9g2x* by noon, November 19, 2020. Members of the public must RSVP by the due date.

III. Availability

The Council's agenda will be made available to the public on Thursday, November 19, 2020, via *consumerfinance.gov.* Individuals should express in their RSVP if they require a paper copy of the agenda.

A recording and transcript of this meeting will be available after the meeting on the Bureau's website *consumerfinance.gov.*

Karla Carnemark,

Acting Chief of Staff, Bureau of Consumer Financial Protection.

[FR Doc. 2020–24293 Filed 11–2–20; 8:45 am]

BILLING CODE 4810–AM–P

DEPARTMENT OF DEFENSE

Department of the Army

Board of Visitors for the Western Hemisphere Institute for Security Cooperation Meeting Notice

AGENCY: Department of the Army, Department of Defense (DoD).

ACTION: Notice of Federal Advisory Committee meeting.

SUMMARY: The Department of the Army is publishing this notice to announce the following virtual Federal Advisory Committee meeting of the Board of Visitors (Board) for the Western Hemisphere Institute for Security Cooperation (the Institute).

DATES: Open to the public virtually on Thursday, December 3, 2020 from 2:00 p.m. to 4:00 p.m. Eastern Standard Time (EST).

ADDRESSES: The Board meeting will be held online and via a teleconference line. To participate in the meeting, see the Meeting Accessibility section for instructions.

FOR FURTHER INFORMATION CONTACT: Mr. Richard Procell, Alternate Designated Federal Officer for the Board, in writing at USACGSC, 100 Stimson Avenue, Fort Leavenworth, KS 66027–2301, by email at *richard.d.procell2.civ@mail.mil,* by telephone at (913) 684–2963.

SUPPLEMENTARY INFORMATION: This meeting is being held under the provisions of the Federal Advisory Committee Act of 1972 (92 Pub. L. 463, 86 Stat. 770), the Government in the Sunshine Act of 1976 (94 Pub. L. 409, 90 Stat. 1241) 41 CFR 102–3.140, and 41 CFR 102–3.150.

Purpose of the Meeting: The Board is a non-discretionary Federal Advisory Committee chartered to provide the Secretary of Defense, through the Secretary of the Army, independent advice and recommendations on matters pertaining to the curriculum, instruction, physical equipment, fiscal affairs, and academic methods of the Institute; matters relating to the Institute that the board decides to consider; and items that the Secretary of Defense deems appropriate. The Board reviews the Institute's curriculum to determine whether it adheres to U.S. doctrine, applicable U.S. laws and regulations, and U.S. policy goals toward Latin America and the Caribbean. The Board also determines whether the curriculum appropriately emphasizes human rights, the rule of law, due process, civilian control of the military, and the role of the military in a democratic society. The Secretary of Defense may act on the Board's advice and recommendations.

Agenda: Members of the Board will receive briefings from the Institute's commandant and course directors; updates from the Department of State, U.S. Northern Command and U.S. Southern Command; and the presentation of other information appropriate to the Board's interests. The agenda also includes a public comment period where individuals or interested organizations may address members of the Board.

Meeting Accessibility: Pursuant to 5 U.S.C. 552b, and 41 CFR 102–3.140, this meeting is open to the public. Persons desiring to participate in the meeting virtually must submit their name, organization, email and telephone to the Alternate Designated Federal Officer at the email or physical address listed above no later than Monday, November 23, 2020. Instructions to attend the virtual meeting will be provided by reply email. Attendees desiring to make public comments are requested to register by providing their name, affiliation, and daytime phone number to the Alternate Designated Federal Officer at the email or physical address listed above no later than Monday, November 23, 2020. Public comments may be made from 3:30 p.m. to 3:45 p.m. EST and will be limited to two minutes each.

Written Comments and Statements: All written statements shall be submitted to the Alternate Designated Federal Officer at the email or physical address listed in the **FOR FURTHER INFORMATION CONTACT** section. Each page of the statement must include the author's name, affiliation, and daytime phone number. Written statements must be received no later than Monday, November 23, 2020 to be considered by the Board. The Alternate Designated Federal Officer will review all timely submitted statements with the Board chairperson, and will provide statements to the members before the meeting. Written comments or statements received after November 23, 2020 will be filed and presented to the Board during its next meeting.

James W. Satterwhite,

Alternate, Army Federal Register Liaison Officer.

[FR Doc. 2020–24287 Filed 11–2–20; 8:45 am]

BILLING CODE 5061–AP–P

DEPARTMENT OF EDUCATION

National Assessment Governing Board; Meeting

AGENCY: Department of Education, National Assessment Governing Board.

ACTION: Notice of open and closed virtual meetings.

SUMMARY: This notice sets forth the agenda for a National Assessment Governing Board (hereafter referred to as Governing Board) meeting on November 19 and November 20, 2020. This notice provides information to members of the public who may be interested in attending the meeting or providing written comments related to the work of the Governing Board. Notice of this meeting is required under the Federal Advisory Committee Act (FACA).

DATES: The November 19–20, 2020 quarterly meeting of the Governing Board will be held on the following dates and times:

November 19, 2020: Open Meeting: 12:30–2:15 p.m. (ET); Closed Meeting: 2:30–4:45 p.m. (ET); Open Meeting: 5:00–6:15 p.m. (ET).

November 20, 2020: Open Meeting: 12:30–2:00 p.m. (ET); Closed Meeting: 2:15–5:30 p.m. (ET).

ADDRESSES: Virtual Meetings.

FOR FURTHER INFORMATION CONTACT: Munira Mwalimu, Executive Officer/Designated Federal Official for the Governing Board, 800 North Capitol Street NW, Suite 825, Washington, DC 20002, telephone: (202) 357–6938, fax: (202) 357–6945, email: *Munira.Mwalimu@ed.gov.*

SUPPLEMENTARY INFORMATION:

Statutory Authority and Function: The Governing Board is established under the National Assessment of Educational Progress Authorization Act, Title III of Public Law 107–279. Information on the Governing Board and its work can be found at *www.nagb.gov.*

The Governing Board is established to formulate policy for the National Assessment of Educational Progress (NAEP) administered by the National Center for Education Statistics (NCES). The Governing Board's responsibilities include the following: (1) Selecting subject areas to be assessed; (2) developing assessment frameworks and specifications; (3) developing appropriate student achievement levels for each grade and subject tested; (4) developing standards and procedures for interstate and national comparisons; (5) improving the form and use of NAEP; (6) developing guidelines for reporting and disseminating results; and (7) releasing initial NAEP results to the public.

Written comments related to the work of the Governing Board may be submitted electronically or in hard copy to the attention of the Executive Officer/Designated Federal Official (see contact information noted above).

Standing Committee Meetings

The Governing Board's standing committees will meet to conduct regularly scheduled work based on agenda items planned for this quarterly Governing Board meeting and follow-up items as reported in the Governing

Board's committee meeting minutes available at *https://www.nagb.gov/governing-board/quarterly-board-meetings.html.* The committee meetings will take place prior to and subsequent to the November 19–20, 2020 quarterly Governing Board meeting. The Governing Board website *www.nagb.gov* will post final dates and times for these working committee meetings, which are open to the public via online registration 5 working days prior to each meeting.

Assessment Development Committee: Open Meeting: November 13, 2020; 4:45–6:45 p.m. (ET).

Executive Committee: Closed meeting: November 16, 2020; 4:00–5:15 p.m. (ET); Open Meeting: 5:20 p.m.–6:00: p.m.

Committee on Standards, Design and Methodology: Open Meeting: December 7, 2020; 3:00–6:00 p.m. (ET).

Reporting & Dissemination Committee (R&D): Open Meeting: November/December 2020; exact date and time to be determined.

Governing Board Meeting: November 19, 2020

Open Meeting: 12:30–2:15 p.m. (ET); Closed Meeting: 2:30–4:45 p.m. (ET); Open Meeting: 5:00–6:15 p.m. (ET).

On Thursday, November 19, 2020, the Governing Board will meet in open session from 12:30 p.m. to 2:15 p.m. From 12:30 p.m. to 1:30 p.m. Chair Haley Barbour will welcome members as well as review and approve the November 19–20, 2020 quarterly Governing Board meeting agenda and minutes from the July 30–31, 2020 quarterly Governing Board meeting and the September 29, 2020 Governing Board meeting. Standing committee chairs then will provide highlights of ongoing committee work.

At 1:30 p.m. Secretary DeVos will administer the oath of office to new members—Suzanne Lane, Testing and Measurement Expert, Julia Rafal-Baer, General Public Representative, Ron Reynolds, Non-Public School Administrator, and Mark White, State Legislator (Republican)—and reappointed Governing Board member, Alice Peisch, State Legislator (Democrat). The newly appointed and reappointed Governing Board members will introduce themselves and provide remarks.

The Governing Board Executive Director, Lesley Muldoon, will provide an update from 2:00 p.m. to 2:15 p.m. following which the Governing Board will take a 15-minute break.

On November 19, 2020, the Governing Board will convene two closed sessions from 2:30 p.m. to 4:45 p.m. Peggy Carr, Associate Commissioner, National Center for Education Statistics, will provide a briefing on NAEP operations and the NAEP budget from 2:30 p.m. to 4:00 p.m. The discussions may impact current and future NAEP contracts and budgets and must be kept confidential to maintain the integrity of the federal acquisition process. Such matters are protected by exemption 9(B) of § 552b(c) of Title 5 of the United States Code.

The second closed session will convene from 4:00 p.m. to 4:45 p.m. Governing Board members will receive an annual ethics briefing from Marcella Goodridge, Assistant General Counsel, Ethics Division, Office of the General Counsel, U.S. Department of Education. The discussions pertain solely to internal personnel rules and practices of an agency and information of a personal nature where disclosure would constitute a clearly unwarranted invasion of personal privacy. As such, the discussions are protected by exemptions 2 and 6 of § 552b(c) of Title 5 of the United States Code. The closed session will be followed by a 15-minute break, after which the Board will reconvene in open session.

From 5:00 p.m. to 6:15 p.m., the Governing Board will meet in open session to receive a panel presentation on Trend in NAEP. The November 19, 2020 session of the Governing Board meeting will adjourn at 6:15 p.m. ET.

The November 20, 2020 session of the Governing Board meeting will convene from 12:30 p.m. to 5:30 p.m. ET. The Governing Board will meet in open session from 12:30 p.m. to 2:00 p.m. when the Chair and Vice Chair of the Assessment Development Committee will lead a policy discussion on the update of the NAEP Reading Framework. Following a 15-minute break, the Governing Board will convene in two closed sessions, beginning at 2:15 p.m. and ending at 5:30 p.m. From 2:15 p.m. to 3:45 p.m., NCES staff will provide a briefing on eNAEP's Design. From 3:45 p.m. to 5:30 p.m., the Governing Board then will receive a briefing from Peggy Carr and Lesley Muldoon on the NAEP Assessment Schedule and Budget beyond 2021. The discussions during these two closed sessions may impact current and future NAEP contracts and budgets and must be kept confidential. Public disclosure of this confidential information would significantly impede implementation of the NAEP assessment program if conducted in open session. Such matters are protected by exemption 9(B) of § 552b(c) of Title 5 of the United States Code.

The November 20, 2020 meeting will adjourn at 5:30 p.m.

Public Participation: The public may participate in the open sessions of the meeting via advance registration. A link to the registration page will be posted on *www.nagb.gov* five working days prior to each meeting date.

Access to Records of the Meeting: Pursuant to FACA requirements, the public may also inspect the meeting materials at *www.nagb.gov* five working days prior to each meeting. The official verbatim transcripts of the public meeting sessions will be available for public inspection no later than 30 calendar days following the meeting.

Reasonable Accommodations: The meeting is accessible to individuals with disabilities. If you will need an auxiliary aid or service to participate in the meeting (*e.g.,* interpreting service, assistive listening device, or materials in an alternate format), notify the contact person listed in this notice no later than ten working days prior to each meeting.

Electronic Access to this Document: The official version of this document is the document published in the **Federal Register**. Internet access to the official edition of the **Federal Register** and the Code of Federal Regulations is available via the Federal Digital System at: *www.gpo.gov/fdsys.* At this site you can view this document, as well as all other documents of this Department published in the **Federal Register**, in text or Adobe Portable Document Format (PDF). To use PDF, you must have Adobe Acrobat Reader, which is available free at the Adobe website. You may also access documents of the Department published in the **Federal Register** by using the article search feature at: *www.federalregister.gov.* Specifically, through the advanced search feature at this site, you can limit your search to documents published by the Department.

Authority: Pub. L. 107–279, Title III—National Assessment of Educational Progress § 301.

Lesley Muldoon,

Executive Director, National Assessment Governing Board (NAGB), U.S. Department of Education.

[FR Doc. 2020–24335 Filed 11–2–20; 8:45 am]

BILLING CODE 4000–01–P

DEPARTMENT OF ENERGY

Agency Information Collection Extension

AGENCY: U.S. Department of Energy.

ACTION: Notice and request for comments.

SUMMARY: The Department of Energy (DOE), pursuant to the Paperwork

Reduction Act of 1995), intends to extend for three years, an information collection request with the Office of Management and Budget (OMB).

DATES: Comments regarding this proposed information collection must be received on or before January 4, 2021. If you anticipate difficulty in submitting comments within that period, contact the person listed below as soon as possible.

ADDRESSES: Written comments may be sent to Ken Hunt, Chief Privacy Officer, U.S. Department of Energy, 19901 Germantown Road, Rm. G–302, Germantown, MD 20874, or by fax at (301) 903–7738 or by email at *privacyactoffice@hq.doe.gov.*

FOR FURTHER INFORMATION CONTACT: Ken Hunt, Chief Privacy Officer, U.S. Department of Energy, 19901 Germantown Road, Germantown, MD 20874 or by telephone at (301) 903–3880 or by fax at (301) 903–7738 or by email at *privacyactoffice@hq.doe.gov, https://www.energy.gov/cio/office-chief-information-officer/services/guidance/privacy-program/submitting-privacy-act.*

SUPPLEMENTARY INFORMATION: Comments are invited on: (a) Whether the extended collection of information is necessary for the proper performance of the functions of the agency, including whether the information shall have practical utility; (b) the accuracy of the agency's estimate of the burden of the proposed collection of information, including the validity of the methodology and assumptions used; (c) ways to enhance the quality, utility, and clarity of the information to be collected; and (d) ways to minimize the burden of the collection of information on respondents, including through the use of automated collection techniques or other forms of information technology.

This information collection request contains: (1) *OMB No:.* 1910–1700; (2) *Information Collection Request Title:* Privacy Act Administration; (3) *Type of Review:* extension; (4) *Purpose:* The Privacy Act Information Request form aids the Department of Energy's processing of Privacy Act requests submitted by an individual or an authorized representative, wherein he or she is requesting records the government may maintain on the individual. The Department's use of this form continues to contribute to the implementation of the Department's Privacy Act processes, including, but not limited to, providing for faster processing of Privacy Act information requests by asking individuals or their authorized representative for pertinent information needed for records retrieval; (5) *Annual Estimated Number of Respondents:* 406; (6) *Annual Estimated Number of Total Responses:* 406; (7) *Annual Estimated Number of Burden Hours:* 135; (8) *Annual Estimated Reporting and Recordkeeping Cost Burden:* $7,847.

Statutory Authority: The Privacy Act of 1974, 5 U.S.C. 552(a) and Department of Energy, Records Maintained on Individuals (Privacy Act), 10 CFR 1008.7.

Signing Authority: This document of the Department of Energy was signed on October 27, 2020, by Rocky Campione, Chief Information Officer, pursuant to delegated authority from the Secretary of Energy. That document with the original signature and date is maintained by DOE. For administrative purposes only, and in compliance with requirements of the Office of the Federal Register, the undersigned DOE Federal Register Liaison Officer has been authorized to sign and submit the document in electronic format for publication, as an official document of the Department of Energy. This administrative process in no way alters the legal effect of this document upon publication in the **Federal Register**.

Signed in Washington, DC, on October 29, 2020.

Treena V. Garrett,

Federal Register Liaison Officer, U.S. Department of Energy.

[FR Doc. 2020–24344 Filed 11–2–20; 8:45 am]

BILLING CODE 6450–01–P

DEPARTMENT OF ENERGY

Proposed Agency Information Collection Extension, With Changes

AGENCY: Office of Energy Efficiency and Renewable Energy, U.S. Department of Energy.

ACTION: Notice and request for OMB review and comment.

SUMMARY: The Department of Energy's (DOE) Office of Energy Efficiency and Renewable Energy (EERE) has submitted to the Office of Management and Budget (OMB) for clearance, a proposal for a three-year extension, with changes, of a collection of information under the provisions of the Paperwork Reduction Act of 1995. The proposed collection will provide DOE with the information necessary to meet its statutory and regulatory obligations under the National Environmental Policy Act (NEPA) of 1969 and the DOE NEPA implementing regulations, which requires EERE to perform environmental impact analyses prior to making a decision to provide Federal funding for research, development and demonstration projects funded by DOE.

DATES: Comments regarding this collection must be received on or before December 3, 2020. If you anticipate difficulty in submitting comments within that period, contact the DOE Desk Officer at OMB of your intention to make a submission as soon as possible. The Desk Officer may be telephoned at (202) 395–4650.

ADDRESSES: Written comments and recommendations for the proposed information collection should be sent within 30 days of publication of this notice to *www.reginfo.gov/public/do/PRAMain.* Find this particular information collection by selecting ''Currently under 30-day Review—Open for Public Comments'' or by using the search function.

And to: Lisa Jorgensen at U.S. Department of Energy, 15013 Denver West Parkway, Golden, CO 80401, or by email at: *EEREEQComments@ee.doe.gov.*

FOR FURTHER INFORMATION CONTACT: Requests for additional information or copies of the EERE Environmental Questionnaire should be directed to Lisa Jorgensen at: *EEREEQComments@ee.doe.gov.* The EERE Environmental Questionnaire also is available for viewing in the Golden Field Office Public Reading Room at: *www.energy.gov/node/2299401.* If you have difficulty accessing this document, please contact Casey Strickland at (720) 356–1575.

SUPPLEMENTARY INFORMATION: This information collection request contains: (1) *OMB No.* 1910–5175; (2) *Information Collection Request Title:* Office of Energy Efficiency and Renewable Energy (EERE) Environmental Questionnaire; (3) *Type of Request:* Extension, with changes; (4) *Purpose:* The DOE's EERE provides Federal funding through Federal assistance programs to businesses, industries, universities, and other groups for renewable energy and energy efficiency research and development and demonstration projects. The National Environmental Policy Act (NEPA) of 1969 (42 U.S.C. 4321 *et seq.*) requires that an environmental analysis be completed for all major Federal actions significantly affecting the environment including projects entirely or partly financed by Federal agencies. To effectively perform environmental analyses for these projects, the DOE's EERE needs to collect project-specific information from Federal financial assistance awardees. DOE's EERE has developed its Environmental Questionnaire to obtain the required

information and ensure that its decision-making processes are consistent with NEPA as it relates to renewable energy and energy efficiency research and development and demonstration projects. Minor changes have been made to the Environmental Questionnaire that help to clarify certain questions, but do not change the meaning of the questions being asked. The average hours per response have increased from one hour to one and one half hours. The annual estimated number of burden hours increased from 300 to 443; (5) *Annual Estimated Number of Total Responses:* 300; (6) *Average Hours per Response:* 1.5; and (7) *Annual Estimated Number of Burden Hours:* 443. (8) There is no cost associated with reporting and recordkeeping.

Statutory Authority: National Environmental Policy Act (NEPA) (42 U.S.C. 4321 *et seq.*).

Signing Authority

This document of the Department of Energy was signed on October, 28, 2020, by Matthew Blevins, Director, Environment, Safety and Health Office, Golden Field Office, Office of Energy Efficiency and Renewable Energy, pursuant to delegated authority from the Secretary of Energy. That document with the original signature and date is maintained by DOE. For administrative purposes only, and in compliance with requirements of the Office of the Federal Register, the undersigned DOE Federal Register Liaison Officer has been authorized to sign and submit the document in electronic format for publication, as an official document of the Department of Energy. This administrative process in no way alters the legal effect of this document upon publication in the **Federal Register**.

Signed in Washington, DC, on October 29, 2020.

Treena V. Garrett,

Federal Register Liaison Officer, U.S. Department of Energy.

[FR Doc. 2020–24307 Filed 11–2–20; 8:45 am]

BILLING CODE 6450–01–P

DEPARTMENT OF ENERGY

Energy Information Administration

Agency Information Collection Extension With Changes

AGENCY: U.S. Energy Information Administration (EIA), Department of Energy (DOE).

ACTION: Notice and request for comments.

SUMMARY: EIA invites public comment on the proposed three year extension, with changes, to Form EIA–846 Manufacturing Energy Consumption Survey Report as required under the Paperwork Reduction Act of 1995. The report is part of EIA's comprehensive energy data program. Form EIA–846 Manufacturing Energy Consumption Survey Report (Quadrennial) collects information on energy consumption, expenditures, and building characteristics from establishments in the manufacturing sector.

DATES: EIA must receive all comments on this proposed information collection no later than January 4, 2021. If you anticipate any difficulties in submitting your comments by the deadline, contact the person listed in the **ADDRESSES** section of this notice as soon as possible.

ADDRESSES: Mail comments to Tom Lorenz, U.S Energy Information Administration, EI–22, 1000 Independence Avenue SW, Washington, DC 20585. Submit comments electronically to *Thomas.Lorenz@eia.gov.*

FOR FURTHER INFORMATION CONTACT: Tom Lorenz by phone at (202) 586–3442, or by email at *Thomas.Lorenz@eia.gov.* The forms and instructions of EIA–846 Manufacturing Energy Consumption Survey are available on EIA's website at *www.eia.gov/survey/.*

SUPPLEMENTARY INFORMATION: This information collection request contains:

(1) *OMB No.:* 1905–0169.

(2) *Information Collection Request Title:* Manufacturing Energy Consumption Survey (MECS).

(3) *Type of Request:* Extension with changes.

(4) *Purpose:* Form EIA–846, is a self-administered sample survey that collects energy consumption and expenditures data from establishments in the manufacturing sector; *i.e.,* North American Industry Classification System (NAICS) sector codes 31–33. The information from this survey is used to publish aggregate statistics on the energy consumption of the manufacturing sector including energy used for fuel and nonfuel purposes. The survey also gathers information on energy-related issues such as energy prices, on-site electricity generation, purchases of electricity from utilities and non-utilities, and fuel switching capabilities. MECS is also used to benchmark EIA's industry forecasting model and update changes in the energy intensity and greenhouse gases data series.

(4a) *Proposed Changes to Information Collection:* EIA proposes making a change to the survey collection cycle of Form EIA–846. EIA proposes to change the frequency of data collection for the MECS from a quadrennial collection cycle to a triennial collection cycle. The change in frequency is in response to the public and other users need for more timely EIA energy consumption data. Additionally, changing to a triennial collection cycle maximizes the efficiency of EIA's resource allocation.

(5) *Annual Estimated Number of Respondents:* 15,000.

(6) *Annual Estimated Number of Total Responses:* 5,000.

(7) *Annual Estimated Number of Burden Hours:* 46,082.

(8) *Annual Estimated Reporting and Recordkeeping Cost Burden:* EIA estimates that respondents will have no additional costs associated with the surveys other than burden hours.

Comments are invited whether or not: (a) The proposed collection of information is necessary for the proper performance of agency functions, including whether the information will have a practical utility; (b) EIA's estimate of the burden of the proposed collection of information, including the validity of the methodology and assumptions used, is accurate; (c) EIA can improve the quality, utility, and clarity of the information it will collect; and (d) EIA can minimize the burden of the collection of information on respondents, such as automated collection techniques or other forms of information technology.

Statutory Authority: 15 U.S.C. 772(b) and 42 U.S.C. 7101 *et seq.*

Signed in Washington, DC, on October 29, 2020.

Samson A. Adeshiyan,

Director, Office of Statistical Methods and Research, U.S. Energy Information Administration.

[FR Doc. 2020–24374 Filed 11–2–20; 8:45 am]

BILLING CODE 6450–01–P

DEPARTMENT OF ENERGY

Federal Energy Regulatory Commission

[Docket No. CP19–505–000]

Spire Storage West LLC; Notice of Request for Extension of Time

Take notice that on October 26, 2020, Spire Storage West LLC (Spire or Applicant) requested that the Federal Energy Regulatory Commission (Commission) grant an extension of time, until May 6, 2021, to complete construction of the Belle Butte Project (Project) at its Belle Butte Storage

facility in Uinta County, Wyoming, and make the Project available for service, as authorized on November 6, 2020. Spire is authorized to complete the construction activities of the project under the Commission's blanket certificate prior notice procedure.

On August 30, 2019, Spire filed with the Commission in Docket No. CP19–505–000 a Prior Notice of Blanket Certificate Activity describing its plan to complete the Project.[1] The Project consists of converting two existing observation wells to vertical injection/withdrawal wells (Wells #15 and #34), and to construct related connecting flowlines and appurtenances that are necessary to improve the Belle Butte Storage Field's performance in Uinta County, Wyoming. Spire was required to complete construction of the Project facilities and make them available for service by November 6, 2020. Due to delays related primarily to the Covid-19 pandemic, the Bureau of Land Management's (BLM) Kemmerer Field Office in Kemmerer, Wyoming, was unable to provide Spire with the requisite land agreements to being construction on BLM-administered lands until October 9, 2020. Applicants now request an additional six-month extension of time, until May 6, 2021, to complete construction of the Project and place it into service.

This notice establishes a 15-calendar day intervention and comment period deadline. Any person wishing to comment on the Applicant's request for an extension of time may do so. No reply comments or answers will be considered. If you wish to obtain legal status by becoming a party to the proceedings for this request, you should, on or before the comment date stated below, file a motion to intervene in accordance with the requirements of the Commission's Rules of Practice and Procedure (18 CFR 385.214 or 385.211) and the Regulations under the Natural Gas Act (18 CFR 157.10).[2]

As a matter of practice, the Commission itself generally acts on requests for extensions of time to complete construction for Natura Gas Act facilities when such requests are contested before order issuance. For those extension requests that are contested,[3] the Commission will aim to issue an order acting on the request within 45 days.[4] The Commission will address all arguments relating to whether the applicant has demonstrated there is good cause to grant the extension.[5] The Commission will not consider arguments that re-litigate the issuance of the Certificate Order, including whether the Commission properly found the project to be in the public convenience or necessity and whether the Commission's environmental analysis for the certificate complied with the National Environmental Policy Act.[6] At the time a pipeline requests an extension of time, orders on certificates of public convenience and necessity are final and the Commission will not re-litigate their issuance.[7] The OEP Director, or his or her designee, will act on all those extension requests that are uncontested.

In addition to publishing the full text of this document in the **Federal Register**, the Commission provides all interested persons an opportunity to view and/or print the contents of this document via the internet through the Commission's Home Page (*http://ferc.gov*) using the ''eLibrary'' link. Enter the docket number excluding the last three digits in the docket number field to access the document. At this time, the Commission has suspended access to the Commission's Public Reference Room, due to the proclamation declaring a National Emergency concerning COVID–19, issued by the President on March 13, 2020. For assistance, contact FERC at *FERCOnlineSupport@ferc.gov* or call toll-free, (886) 208–3676 or TYY, (202) 502–8659.

The Commission strongly encourages electronic filings of comments, protests and interventions in lieu of paper using the ''eFile'' link at *http://www.ferc.gov.* Persons unable to file electronically may mail similar pleadings to the Federal Energy Regulatory Commission, 888 First Street NE, Washington, DC 20426. Hand delivered submissions in docketed proceedings should be delivered to Health and Human Services, 12225 Wilkins Avenue, Rockville, Maryland 20852.

Comment Date: 5 p.m. Eastern Time on November 12, 2020.

Dated: October 27, 2020.

Kimberly D. Bose,

Secretary.

[FR Doc. 2020–24274 Filed 11–2–20; 8:45 am]

BILLING CODE 6717–01–P

[1] Prior Notice of Blanket Certificate Activity, Docket No. CP19–505–000 (filed Aug. 30, 2019).

[2] Only motions to intervene from entities that were party to the underlying proceeding will be accepted. *Algonquin Gas Transmission, LLC,* 170 FERC ¶ 61,144, at P 39 (2020).

[3] Contested proceedings are those where an intervenor disputes any material issue of the filing. 18 CFR 385.2201(c)(1) (2019).

[4] *Algonquin Gas Transmission, LLC,* 170 FERC ¶ 61,144, at P 40 (2020).

[5] *Id.* P 40.

[6] Similarly, the Commission will not re-litigate the issuance of an NGA section 3 authorization, including whether a proposed project is not inconsistent with the public interest and whether the Commission's environmental analysis for the permit order complied with NEPA.

[7] *Algonquin Gas Transmission, LLC,* 170 FERC ¶ 61,144, at P 40 (2020).

DEPARTMENT OF ENERGY

Federal Energy Regulatory Commission

[Docket No. ER21–183–000]

Nutmeg Solar, LLC; Supplemental Notice That Initial Market-Based Rate Filing Includes Request for Blanket Section 204 Authorization

This is a supplemental notice in the above-referenced proceeding of Nutmeg Solar, LLC's application for market-based rate authority, with an accompanying rate tariff, noting that such application includes a request for blanket authorization, under 18 CFR part 34, of future issuances of securities and assumptions of liability.

Any person desiring to intervene or to protest should file with the Federal Energy Regulatory Commission, 888 First Street NE, Washington, DC 20426, in accordance with Rules 211 and 214 of the Commission's Rules of Practice and Procedure (18 CFR 385.211 and 385.214). Anyone filing a motion to intervene or protest must serve a copy of that document on the Applicant.

Notice is hereby given that the deadline for filing protests with regard to the applicant's request for blanket authorization, under 18 CFR part 34, of future issuances of securities and assumptions of liability, is November 17, 2020.

The Commission encourages electronic submission of protests and interventions in lieu of paper, using the FERC Online links at *http://www.ferc.gov.* To facilitate electronic service, persons with internet access who will eFile a document and/or be listed as a contact for an intervenor must create and validate an eRegistration account using the eRegistration link. Select the eFiling link to log on and submit the intervention or protests.

Persons unable to file electronically may mail similar pleadings to the Federal Energy Regulatory Commission, 888 First Street NE, Washington, DC 20426. Hand delivered submissions in docketed proceedings should be delivered to Health and Human Services, 12225 Wilkins Avenue, Rockville, Maryland 20852.

In addition to publishing the full text of this document in the **Federal Register**, the Commission provides all

interested persons an opportunity to view and/or print the contents of this document via the internet through the Commission's Home Page (*http://ferc.gov*) using the ''eLibrary'' link. Enter the docket number excluding the last three digits in the docket number field to access the document. At this time, the Commission has suspended access to the Commission's Public Reference Room, due to the proclamation declaring a National Emergency concerning the Novel Coronavirus Disease (COVID–19), issued by the President on March 13, 2020. For assistance, contact the Federal Energy Regulatory Commission at *FERCOnlineSupport@ferc.gov* or call toll-free, (886) 208–3676 or TYY, (202) 502–8659.

Dated: October 28, 2020.

Nathaniel J. Davis, Sr.,

Deputy Secretary.

[FR Doc. 2020–24311 Filed 11–2–20; 8:45 am]

BILLING CODE 6717–01–P

DEPARTMENT OF ENERGY

Federal Energy Regulatory Commission

[Docket No. ER21–219–000]

Suncor Energy Marketing Inc.; Supplemental Notice That Initial Market-Based Rate Filing Includes Request for Blanket Section 204 Authorization

This is a supplemental notice in the above-referenced Suncor Energy Marketing Inc.'s application for market-based rate authority, with an accompanying rate tariff, noting that such application includes a request for blanket authorization, under 18 CFR part 34, of future issuances of securities and assumptions of liability.

Any person desiring to intervene or to protest should file with the Federal Energy Regulatory Commission, 888 First Street NE, Washington, DC 20426, in accordance with Rules 211 and 214 of the Commission's Rules of Practice and Procedure (18 CFR 385.211 and 385.214). Anyone filing a motion to intervene or protest must serve a copy of that document on the Applicant.

Notice is hereby given that the deadline for filing protests with regard to the applicant's request for blanket authorization, under 18 CFR part 34, of future issuances of securities and assumptions of liability, is November 17, 2020.

The Commission encourages electronic submission of protests and interventions in lieu of paper, using the FERC Online links at *http://www.ferc.gov.* To facilitate electronic service, persons with internet access who will eFile a document and/or be listed as a contact for an intervenor must create and validate an eRegistration account using the eRegistration link. Select the eFiling link to log on and submit the intervention or protests.

Persons unable to file electronically may mail similar pleadings to the Federal Energy Regulatory Commission, 888 First Street NE, Washington, DC 20426. Hand delivered submissions in docketed proceedings should be delivered to Health and Human Services, 12225 Wilkins Avenue, Rockville, Maryland 20852.

In addition to publishing the full text of this document in the **Federal Register**, the Commission provides all interested persons an opportunity to view and/or print the contents of this document via the internet through the Commission's Home Page (*http://ferc.gov*) using the ''eLibrary'' link. Enter the docket number excluding the last three digits in the docket number field to access the document. At this time, the Commission has suspended access to the Commission's Public Reference Room, due to the proclamation declaring a National Emergency concerning the Novel Coronavirus Disease (COVID–19), issued by the President on March 13, 2020. For assistance, contact the Federal Energy Regulatory Commission at *FERCOnlineSupport@ferc.gov* or call toll-free, (886) 208–3676 or TYY, (202) 502–8659.

Dated: October 28, 2020.

Nathaniel J. Davis, Sr.,

Deputy Secretary.

[FR Doc. 2020–24312 Filed 11–2–20; 8:45 am]

BILLING CODE 6717–01–P

DEPARTMENT OF ENERGY

Federal Energy Regulatory Commission

[Docket No. CP21–2–000]

Southern Star Central Gas Pipeline, Inc.; Notice of Scoping Period Requesting Comments on Environmental Issues for the Proposed Lines DT and DS Replacement Project Amendment

The staff of the Federal Energy Regulatory Commission (FERC or Commission) will prepare an environmental document, that will discuss the environmental impacts of the Lines DT and DS Replacement Project Amendment (Amendment) involving abandonment of facilities by Southern Star Central Gas Pipeline, Inc. (Southern Star) in Anderson and Franklin Counties, Kansas. The Commission will use this environmental document in its decision-making process to determine whether the project is in the public convenience and necessity.

This notice announces the opening of the scoping process the Commission will use to gather input from the public and interested agencies regarding the project. As part of the National Environmental Policy Act (NEPA) review process, the Commission takes into account concerns the public may have about proposals and the environmental impacts that could result from its action whenever it considers the issuance of abandonment authorizations. This gathering of public input is referred to as ''scoping.'' The main goal of the scoping process is to focus the analysis in the environmental document on the important environmental issues. Additional information about the Commission's NEPA process is described below in the *NEPA Process and Environmental Document* section of this notice.

By this notice, the Commission requests public comments on the scope of issues to address in the environmental document. To ensure that your comments are timely and properly recorded, please submit your comments so that the Commission receives them in Washington, DC on or before 5:00 p.m. Eastern Time on November 26, 2020. Comments may be submitted in written or oral form. Further details on how to submit comments are provided in the *Public Participation* section of this notice.

Your comments should focus on the potential environmental effects, reasonable alternatives, and measures to avoid or lessen environmental impacts. Your input will help the Commission staff determine what issues they need to evaluate in the environmental document. Commission staff will consider all written or oral comments during the preparation of the environmental document.

If you submitted comments on this project to the Commission before the opening of this docket on October 2, 2020, you will need to file those comments in Docket No. CP21–2–000 to ensure they are considered as part of the proceeding.

This notice is being sent to the Commission's current environmental mailing list for this project. State and local government representatives should notify their constituents of this

proposed project and encourage them to comment on their areas of concern.

If you are a landowner receiving this notice, a pipeline company representative may contact you about the acquisition of an easement to construct, operate, and maintain the proposed facilities. The company would seek to negotiate a mutually acceptable easement agreement. You are not required to enter into an agreement. However, if the Commission approves the project, the Natural Gas Act conveys the right of eminent domain to the company. Therefore, if you and the company do not reach an easement agreement, the pipeline company could initiate condemnation proceedings in court. In such instances, compensation would be determined by a judge in accordance with state law. The Commission does not subsequently grant, exercise, or oversee the exercise of that eminent domain authority. The courts have exclusive authority to handle eminent domain cases; the Commission has no jurisdiction over these matters.

Southern Star provided landowners with a fact sheet prepared by the FERC entitled ''An Interstate Natural Gas Facility On My Land? What Do I Need To Know?'' which addresses typically asked questions, including the use of eminent domain and how to participate in the Commission's proceedings. This fact sheet along with other landowner topics of interest are available for viewing on the FERC website (*www.ferc.gov*) under the Natural Gas Questions or Landowner Topics link.

Public Participation

There are three methods you can use to submit your comments to the Commission. Please carefully follow these instructions so that your comments are properly recorded. The Commission encourages electronic filing of comments and has staff available to assist you at (866) 208–3676 or *FercOnlineSupport@ferc.gov.*

(1) You can file your comments electronically using the *eComment* feature, which is located on the Commission's website (*www.ferc.gov*) under the link to FERC Online. Using eComment is an easy method for submitting brief, text-only comments on a project;

(2) You can file your comments electronically by using the *eFiling* feature, which is located on the Commission's website (*www.ferc.gov*) under the link to FERC Online. With eFiling, you can provide comments in a variety of formats by attaching them as a file with your submission. New eFiling users must first create an account by clicking on ''*eRegister.*'' You will be asked to select the type of filing you are making; a comment on a particular project is considered a ''Comment on a Filing''; or

(3) You can file a paper copy of your comments by mailing them to the Commission. Be sure to reference the project docket number (CP21–2–000) on your letter. Submissions sent via the U.S. Postal Service must be addressed to: Kimberly D. Bose, Secretary, Federal Energy Regulatory Commission, 888 First Street NE, Room 1A, Washington, DC 20426. Submissions sent via any other carrier must be addressed to: Kimberly D. Bose, Secretary, Federal Energy Regulatory Commission, 12225 Wilkins Avenue, Rockville, Maryland 20852.

Additionally, the Commission offers a free service called eSubscription which makes it easy to stay informed of all issuances and submittals regarding the dockets/projects to which you subscribe. These instant email notifications are the fastest way to receive notification and provide a link to the document files which can reduce the amount of time you spend researching proceedings. Go to *https://www.ferc.gov/ferc-online/overview* to register for eSubscription.

Summary of the Proposed Project

Southern Star proposes to abandon Lines DT (31.8 miles) and DS (31.4 miles) in-place rather than by removal as previously proposed in Anderson and Franklin Counties, Kansas. The general location of the project facilities is shown in appendix 1.[1]

Land Requirements for Construction

Abandoning Lines DT and DS in-place would require the use of about 37.0 acres of land. The abandoned Line DS and associated permanent easement would be retained by Southern Star as the newly installed Line DPA mostly parallels Line DS. The abandoned Line DT and associated permanent easement would become the property of and be released back to the landowners. Southern Star would no longer perform operational maintenance/clearing activities within these areas. All pipeline markers would be removed, and cathodic protection would be turned off and disconnected.

NEPA Process and the Environmental Document

Any environmental document issued by the Commission will discuss impacts that could occur as a result of the construction and operation of the proposed project under the relevant general resource areas:

- Geology and soils;
- water resources and wetlands;
- vegetation and wildlife;
- threatened and endangered species;
- cultural resources;
- land use;
- air quality and noise; and
- reliability and safety.

Commission staff will also evaluate reasonable alternatives to the proposed project or portions of the project and make recommendations on how to lessen or avoid impacts on the various resource areas. Your comments will help Commission staff identify and focus on the issues that might have an effect on the human environment and potentially eliminate others from further study and discussion in the environmental document.

Following this scoping period, Commission staff will determine whether to prepare an Environmental Assessment (EA) or an Environmental Impact Statement (EIS). The EA or the EIS will present Commission staff's independent analysis of the issues. If Commission staff prepares an EA, a *Notice of Schedule for the Preparation of an Environmental Assessment* will be issued. The EA may be issued for an allotted public comment period. The Commission would consider timely comments on the EA before making its decision regarding the proposed project. If Commission staff prepares an EIS, a *Notice of Intent to Prepare an EIS/Notice of Schedule* will be issued, which will open up an additional comment period. Staff will then prepare a draft EIS which will be issued for public comment. Commission staff will consider all timely comments received during the comment period on the draft EIS and revise the document, as necessary, before issuing a final EIS. Any EA or draft and final EIS will be available in electronic format in the public record through eLibrary[2] and the Commission's natural gas environmental documents web page (*https://www.ferc.gov/industries-data/natural-gas/environment/environmental-documents*). If eSubscribed, you will receive instant email notification when the environmental document is issued.

[1] The appendices referenced in this notice will not appear in the **Federal Register**. Copies of appendices were sent to all those receiving this notice in the mail and are available at *www.ferc.gov* using the link called ''eLibrary'' or from the Commission's Public Reference Room, 888 First Street NE, Washington, DC 20426, or call (202) 502–8371. For instructions on connecting to eLibrary, refer to the last page of this notice.

[2] For instructions on connecting to eLibrary, refer to the last page of this notice.

With this notice, the Commission is asking agencies with jurisdiction by law and/or special expertise with respect to the environmental issues of this project to formally cooperate in the preparation of the environmental document.[3] Agencies that would like to request cooperating agency status should follow the instructions for filing comments provided under the *Public Participation* section of this notice.

Consultation Under Section 106 of the National Historic Preservation Act

In accordance with the Advisory Council on Historic Preservation's implementing regulations for section 106 of the National Historic Preservation Act, the Commission is using this notice to initiate consultation with the applicable State Historic Preservation Office(s), and to solicit their views and those of other government agencies, interested Indian tribes, and the public on the project's potential effects on historic properties.[4] The environmental document for this project will document findings on the impacts on historic properties and summarize the status of consultations under section 106.

Environmental Mailing List

The environmental mailing list includes federal, state, and local government representatives and agencies; elected officials; environmental and public interest groups; Native American Tribes; other interested parties; and local libraries and newspapers. This list also includes all affected landowners (as defined in the Commission's regulations) who are potential right-of-way grantors, whose property may be used temporarily for project purposes, or who own homes within certain distances of aboveground facilities, and anyone who submits comments on the project and includes a mailing address with their comments. Commission staff will update the environmental mailing list as the analysis proceeds to ensure that Commission notices related to this environmental review are sent to all individuals, organizations, and government entities interested in and/or potentially affected by the proposed project.

If you need to make changes to your name/address, or if you would like to remove your name from the mailing list, please return the attached ''Mailing List Update Form'' (appendix 2).

Additional Information

Additional information about the project is available from the Commission's Office of External Affairs, at (866) 208–FERC, or on the FERC website at *www.ferc.gov* using the eLibrary link. Click on the eLibrary link, click on ''General Search'' and enter the docket number in the ''Docket Number'' field. Be sure you have selected an appropriate date range. For assistance, please contact FERC Online Support at *FercOnlineSupport@ferc.gov* or (866) 208–3676, or for TTY, contact (202) 502–8659. The eLibrary link also provides access to the texts of all formal documents issued by the Commission, such as orders, notices, and rulemakings.

Public sessions or site visits will be posted on the Commission's calendar located at *https://www.ferc.gov/news-events/events* along with other related information.

Dated: October 27, 2020.

Kimberly D. Bose,

Secretary.

Appendix 1

Project Map

BILLING CODE 6717–01–P

[3] The Council on Environmental Quality regulations addressing cooperating agency responsibilities are at Title 40, Code of Federal Regulations, Section 1501.6.

[4] The Advisory Council on Historic Preservation's regulations are at Title 36, Code of Federal Regulations, Part 800. Those regulations define historic properties as any prehistoric or historic district, site, building, structure, or object included in or eligible for inclusion in the National Register of Historic Places.

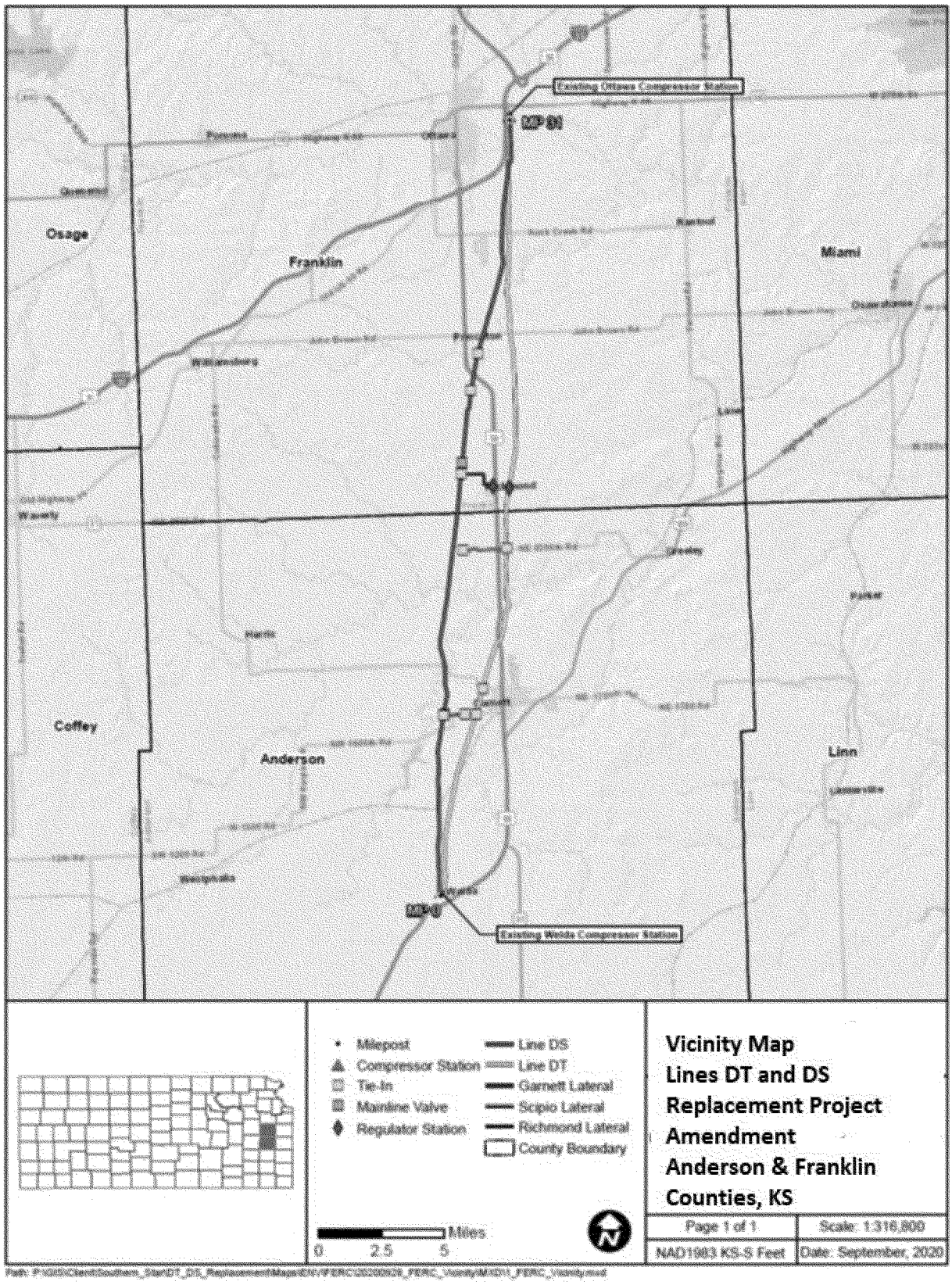
Existing Ottawa Compressor Station
Osage
Franklin
Miami
Coffey
Anderson
Linn
Existing Welda Compressor Station
Milepost
Compressor Station
Tie-In
Mainline Valve
Regulator Station
Line DS
Line DT
Garnett Lateral
Scipio Lateral
Richmond Lateral
County Boundary
Miles
0 2.5 5
Vicinity Map
Lines DT and DS
Replacement Project
Amendment
Anderson & Franklin
Counties, KS
Page 1 of 1
Scale: 1:316,800
NAD1983 KS-S Feet
Date: September, 2020

BILLING CODE 6717–01–C

Appendix 2

Mailing List Update Form

Lines DT and DS Replacement Project Amendment

Name _____

Agency _____

Address _____

City_____ State____ Zip Code_____

☐ Please update the mailing list

☐ Please remove my name from the mailing list

FROM _____

ATTN: OEP—Gas 3, PJ–11.3, Federal Energy Regulatory Commission, 888 First Street NE, Washington, DC 20426

(CP21–2–000—Lines DT and DS Replacement Project Amendment)

Staple or Tape Here

[FR Doc. 2020–24273 Filed 11–2–20; 8:45 am]

BILLING CODE 6717–01–P

DEPARTMENT OF ENERGY

Federal Energy Regulatory Commission

[Project No. 2266–102]

Nevada Irrigation District; Notice of Designation of Certain Commission Personnel as Non-Decisional

Commission staff members Rachael Warden (Office of the General Counsel 202–502–8717; *rachael.warden@ferc.gov*) and Elizabeth Molloy (Office of the General Counsel; 202–502–8771; *elizabeth.molloy@ferc.gov*) are assigned to help resolve issues related to the Yuba-Bear Hydroelectric Project No. 2266.

As ''non-decisional'' staff, Ms. Warden and Ms. Molloy will not participate in an advisory capacity in any matters related to the Yuba-Bear Hydroelectric Project No. 2266.

Dated: October 27, 2020.

Kimberly D. Bose,

Secretary.

[FR Doc. 2020–24272 Filed 11–2–20; 8:45 am]

BILLING CODE 6717–01–P

DEPARTMENT OF ENERGY

Federal Energy Regulatory Commission

[Docket No. RM98–1–000]

Records Governing Off-the-Record Communications; Public Notice

This constitutes notice, in accordance with 18 CFR 385.2201(b), of the receipt of prohibited and exempt off-the-record communications.

Order No. 607 (64 FR 51222, September 22, 1999) requires Commission decisional employees, who make or receive a prohibited or exempt off-the-record communication relevant to the merits of a contested proceeding, to deliver to the Secretary of the Commission, a copy of the communication, if written, or a summary of the substance of any oral communication.

Prohibited communications are included in a public, non-decisional file associated with, but not a part of, the decisional record of the proceeding. Unless the Commission determines that the prohibited communication and any responses thereto should become a part of the decisional record, the prohibited off-the-record communication will not be considered by the Commission in reaching its decision. Parties to a proceeding may seek the opportunity to respond to any facts or contentions made in a prohibited off-the-record communication and may request that the Commission place the prohibited communication and responses thereto in the decisional record. The Commission will grant such a request only when it determines that fairness so requires. Any person identified below as having made a prohibited off-the-record communication shall serve the document on all parties listed on the official service list for the applicable proceeding in accordance with Rule 2010, 18 CFR 385.2010.

Exempt off-the-record communications are included in the decisional record of the proceeding, unless the communication was with a cooperating agency as described by 40 CFR 1501.6, made under 18 CFR 385.2201(e)(1)(v).

The following is a list of off-the-record communications recently received by the Secretary of the Commission. The communications listed are grouped by docket numbers in ascending order. These filings are available for electronic review at the Commission in the Public Reference Room or may be viewed on the Commission's website at *http://www.ferc.gov* using the eLibrary link. Enter the docket number, excluding the last three digits, in the docket number field to access the document. For assistance, please contact FERC Online Support at *FERCOnlineSupport@ferc.gov* or toll free at (866) 208–3676, or for TTY, contact (202) 502–8659.

Docket No.	File date	Presenter or requester
Prohibited:		
P–14581–000	10–15–2020	FERC Staff.[1]
Exempt:		
1. CP17–40–000	10–16–2020	U.S. Representative Rodney Davis.
2. P–2360–000	10–16–2020	U.S. Representative Pete Stauber.

[1] Email regarding the 10/15/2020 communication between Commission staff and U.S. Fish and Wildlife Service, SF Bay Delta Fish and Wildlife Office.

Dated: October 27, 2020.

Nathaniel J. Davis, Sr.,

Deputy Secretary.

[FR Doc. 2020–24330 Filed 11–2–20; 8:45 am]

BILLING CODE 6717–01–P

DEPARTMENT OF ENERGY

Federal Energy Regulatory Commission

Combined Notice of Filings #1

Take notice that the Commission received the following electric corporate filings:

Docket Numbers: EC21–13–000.

Applicants: SunE Beacon Site 2 LLC, SunE Beacon Site 5 LLC.

Description: Application for Authorization Under Section 203 of the Federal Power Act, et al. of SunE Beacon Site 2 LLC, et al.

Filed Date: 10/27/20.

Accession Number: 20201027–5025.

Comments Due: 5 p.m. ET 11/17/20.

Take notice that the Commission received the following electric rate filings:

Docket Numbers: ER10–1276–012; ER10–1292–001; ER10–1287–011; ER10–1303–001; ER10–1319–013; ER10–1353–013; ER18–1183–004; ER18–1184–004.

Applicants: Consumers Energy Company, CMS Energy Resource Management Company, Grayling Generation Station Limited Partnership, CMS Generation Michigan Power, L.L.C., Dearborn Industrial Generation, L.L.C., Delta Solar Power I, LLC, Delta Solar Power II, LLC.

Description: Notice of Non-Material Change-In-Status of Consumer Energy Company, et al.

Filed Date: 10/27/20.

Accession Number: 20201027–5126.

Comments Due: 5 p.m. ET 11/17/20.

Docket Numbers: ER10–1285–011.

Applicants: Craven County Wood Energy Limited Partnership.

Description: Notice of Non-Material Change-In-Status of Craven County Wood Energy Limited Partnership.

Filed Date: 10/27/20.

Accession Number: 20201027–5132.

Comments Due: 5 p.m. ET 11/17/20.

Docket Numbers: ER10–2881–035; ER10–2882–036; ER10–2883–034; ER10–2884–034; ER16–2509–005; ER17–2400–006; ER17–2401–006; ER17–2403–006; ER17–2404–006.

Applicants: Alabama Power Company, Southern Power Company, Mississippi Power Co., Georgia Power Co., Rutherford Farm, LLC, SP Butler Solar, LLC, SP Decatur Parkway Solar, LLC, SP Pawpaw Solar, LLC, SP Sandhills Solar, LLC.

Description: Amendment to June 30, 2020 Updated Market Power Analysis for the Southeast Region of Alabama Power Company, et al.

Filed Date: 10/22/20.

Accession Number: 20201022–5177.

Comments Due: 5 p.m. ET 11/12/20.

Docket Numbers: ER18–1150–004.

Applicants: Northwest Ohio Wind, LLC.

Description: Notice of Non-Material Change-In-Status of Northwest Ohio Wind, LLC.

Filed Date: 10/27/20.

Accession Number: 20201027–5136.

Comments Due: 5 p.m. ET 11/17/20.

Docket Numbers: ER21–213–000.

Applicants: Public Service Company of Colorado.

Description: § 205(d) Rate Filing: PSC–PTZLGN–LGIA–196–0.0.0-Agrmt to be effective 10/15/2020.

Filed Date: 10/26/20.

Accession Number: 20201026–5139.

Comments Due: 5 p.m. ET 11/16/20.

Docket Numbers: ER21–214–000.

Applicants: Baltimore Gas and Electric Company, PJM Interconnection, L.L.C.

Description: § 205(d) Rate Filing: BGE submits Revisions to PJM Tariff, Attachment H–2A and H–2B to be effective 1/1/2021.

Filed Date: 10/26/20.

Accession Number: 20201026–5147.

Comments Due: 5 p.m. ET 11/16/20.

Docket Numbers: ER21–215–000.

Applicants: Deseret Generation & Transmission Co-operative, Inc.

Description: § 205(d) Rate Filing: 2020 RIA Annual Update to be effective 7/1/2020.

Filed Date: 10/27/20.

Accession Number: 20201027–5036.

Comments Due: 5 p.m. ET 11/17/20.

Docket Numbers: ER21–216–000.

Applicants: PJM Interconnection, L.L.C.

Description: § 205(d) Rate Filing: Original ISA, Service Agreement No. 5813; Queue No. AD2–072 to be effective 9/29/2020.

Filed Date: 10/27/20.

Accession Number: 20201027–5052.

Comments Due: 5 p.m. ET 11/17/20.

Docket Numbers: ER21–217–000.

Applicants: Citizens Sunrise Transmission LLC.

Description: Compliance filing: Order No. 864 Compliance Filing to be effective N/A.

Filed Date: 10/27/20.

Accession Number: 20201027–5078.

Comments Due: 5 p.m. ET 11/17/20.

Docket Numbers: ER21–218–000.

Applicants: Citizens Sycamore-Penasquitos Transmission LLC.

Description: Compliance filing: Order No. 864 Compliance Filing to be effective N/A.

Filed Date: 10/27/20.

Accession Number: 20201027–5081.

Comments Due: 5 p.m. ET 11/17/20.

Docket Numbers: ER21–219–000.

Applicants: Suncor Energy Marketing Inc.

Description: Baseline eTariff Filing: Suncor Energy Marketing Inc. MBR Tariff Filing to be effective 12/26/2020.

Filed Date: 10/27/20.

Accession Number: 20201027–5086.

Comments Due: 5 p.m. ET 11/17/20.

Docket Numbers: ER21–220–000.

Applicants: Citizens Sunrise Transmission LLC.

Description: § 205(d) Rate Filing: Request for Approval of Amended Tariff to be effective 1/1/2021.

Filed Date: 10/27/20.

Accession Number: 20201027–5129.

Comments Due: 5 p.m. ET 11/17/20.

Docket Numbers: ER21–221–000.

Applicants: Citizens Sycamore-Penasquitos Transmission LLC.

Description: § 205(d) Rate Filing: Annual Operating Cost True-Up Adjustment Informational to be effective 1/1/2021.

Filed Date: 10/27/20.

Accession Number: 20201027–5147.

Comments Due: 5 p.m. ET 11/17/20.

The filings are accessible in the Commission's eLibrary system (*https://elibrary.ferc.gov/idmws/search/fercgensearch.asp*) by querying the docket number.

Any person desiring to intervene or protest in any of the above proceedings must file in accordance with Rules 211 and 214 of the Commission's Regulations (18 CFR 385.211 and 385.214) on or before 5:00 p.m. Eastern time on the specified comment date. Protests may be considered, but intervention is necessary to become a party to the proceeding.

eFiling is encouraged. More detailed information relating to filing requirements, interventions, protests, service, and qualifying facilities filings can be found at: *http://www.ferc.gov/docs-filing/efiling/filing-req.pdf.* For other information, call (866) 208–3676 (toll free). For TTY, call (202) 502–8659.

Dated: October 27, 2020.

Nathaniel J. Davis, Sr.,

Deputy Secretary.

[FR Doc. 2020–24326 Filed 11–2–20; 8:45 am]

BILLING CODE 6717–01–P

DEPARTMENT OF ENERGY

Federal Energy Regulatory Commission

Combined Notice of Filings #1

Take notice that the Commission received the following electric corporate filings:

Docket Numbers: EC21–14–000.

Applicants: TCT Generation Holdings, LLC, Global Energy & Power Infrastructure Fund III, L.P.

Description: Application for Authorization Under Section 203 of the Federal Power Act, et al. of TCT Generation Holdings, LLC, et al.

Filed Date: 10/27/20.

Accession Number: 20201027–5190.

Comments Due: 5 p.m. ET 11/17/20.

Docket Numbers: EC21–15–000.

Applicants: SunE Beacon Site 2 LLC, SunE Beacon Site 5 LLC.

Description: Application for Authorization Under Section 203 of the Federal Power Act, et al. of SunE Beacon Site 2 LLC, et al.

Filed Date: 10/27/20.

Accession Number: 20201027–5192.

Comments Due: 5 p.m. ET 11/17/20.

Take notice that the Commission received the following exempt wholesale generator filings:

Docket Numbers: EG21–15–000.
Applicants: BT Kellam Solar, LLC.
Description: Self-Certification of BT Kellam Solar, LLC as an Exempt Wholesale Generator.
Filed Date: 10/28/20.
Accession Number: 20201028–5129.
Comments Due: 5 p.m. ET 11/18/20.

Take notice that the Commission received the following electric rate filings:

Docket Numbers: ER20–2341–001.
Applicants: Midcontinent Independent System Operator, Inc.
Description: Compliance filing: 2020–10–28 SA 3518 Deficiency Response ITC Midwest-Interstate Power FSA (J416) to be effective 7/1/2020.
Filed Date: 10/28/20.
Accession Number: 20201028–5070.
Comments Due: 5 p.m. ET 11/18/20.

Docket Numbers: ER20–2352–001.
Applicants: Midcontinent Independent System Operator, Inc.
Description: Compliance filing: 2020–10–28_SA 1972 Deficiency Response GRE–OTP 4th Rev GIA (G645 G788) to be effective 7/6/2020.
Filed Date: 10/28/20.
Accession Number: 20201028–5086.
Comments Due: 5 p.m. ET 11/18/20.

Docket Numbers: ER20–2364–001.
Applicants: Midcontinent Independent System Operator, Inc.
Description: Compliance filing: 2020–10–28_SA 3512 Deficiency Response NSP–NSP FSA (J399) to be effective 6/30/2020.
Filed Date: 10/28/20.
Accession Number: 20201028–5019.
Comments Due: 5 p.m. ET 11/18/20.

Docket Numbers: ER20–2382–001.
Applicants: Midcontinent Independent System Operator, Inc.
Description: Compliance filing: 2020–10–28_SA 3516 Deficiency Response Ameren-Broadlands Wind Farm FSA (J468) to be effective 10/1/2020.
Filed Date: 10/28/20.
Accession Number: 20201028–5033.
Comments Due: 5 p.m. ET 11/18/20.

Docket Numbers: ER20–2408–001.
Applicants: Midcontinent Independent System Operator, Inc.
Description: Compliance filing: 2020–10–28 SA 3524 Deficiency Response Ameren-Broadlands Wind FSA (FCA) (J468) to be effective 10/1/2020.
Filed Date: 10/28/20.
Accession Number: 20201028–5047.
Comments Due: 5 p.m. ET 11/18/20.

Docket Numbers: ER20–2412–001.
Applicants: Midcontinent Independent System Operator, Inc.
Description: Compliance filing: 2020–10–28_SA 3513 Deficiency Response NSP-Stoneray Power Partners FSA (J426) to be effective 6/30/2020.
Filed Date: 10/28/20.
Accession Number: 20201028–5021.
Comments Due: 5 p.m. ET 11/18/20.

Docket Numbers: ER20–2427–001.
Applicants: Midcontinent Independent System Operator, Inc.
Description: Compliance filing: 2020–10–28_SA 3521 Deficiency Response NSP-Red Pine Wind FSA (H081) to be effective 6/30/2020.
Filed Date: 10/28/20.
Accession Number: 20201028–5028.
Comments Due: 5 p.m. ET 11/18/20.

Docket Numbers: ER20–2437–001.
Applicants: Midcontinent Independent System Operator, Inc.
Description: Compliance filing: 2020–10–28_SA 3519 Deficiency Response NSP-North Star Solar FSA (J385) to be effective 6/30/2020.
Filed Date: 10/28/20.
Accession Number: 20201028–5029.
Comments Due: 5 p.m. ET 11/18/20.

Docket Numbers: ER20–2439–001.
Applicants: Midcontinent Independent System Operator, Inc.
Description: Compliance filing: 2020–10–28_SA 3514 Deficiency Response NSP-Marshall Solar FSA (J400) to be effective 6/30/2020.
Filed Date: 10/28/20.
Accession Number: 20201028–5027.
Comments Due: 5 p.m. ET 11/18/20.

Docket Numbers: ER21–222–000
Applicants: Hog Creek Wind Project, LLC.
Description: Baseline eTariff Filing: Reactive Power Compensation Filing to be effective 10/28/2020.
Filed Date: 10/27/20.
Accession Number: 20201027–5155.
Comments Due: 5 p.m. ET 11/17/20.

Docket Numbers: ER21–223–000.
Applicants: Union Electric Company.
Description: § 205(d) Rate Filing: Rate Schedule 22 to be effective 12/29/2020.
Filed Date: 10/27/20.
Accession Number: 20201027–5175.
Comments Due: 5 p.m. ET 11/17/20.

Docket Numbers: ER21–224–000.
Applicants: Pacific Gas and Electric Company.
Description: § 205(d) Rate Filing: Q3 2020 Quarterly Filing of City and County of San Francisco's WDT SA (SA 275) to be effective 9/30/2020.
Filed Date: 10/28/20.
Accession Number: 20201028–5000.
Comments Due: 5 p.m. ET 11/18/20.

Docket Numbers: ER21–225–000.
Applicants: Southwest Power Pool, Inc.
Description: § 205(d) Rate Filing: 2825R8 KMEA and Evergy Kansas Central Meter Agent Agreement to be effective 11/1/2020.
Filed Date: 10/28/20.
Accession Number: 20201028–5012.
Comments Due: 5 p.m. ET 11/18/20.

Docket Numbers: ER21–226–000.
Applicants: PJM Interconnection, L.L.C.
Description: Compliance filing: Notice of Cancellation of T154 WMPA, SA No. 2400 to be effective N/A.
Filed Date: 10/28/20.
Accession Number: 20201028–5038.
Comments Due: 5 p.m. ET 11/18/20.

Docket Numbers: ER21–227–000.
Applicants: PJM Interconnection, L.L.C.
Description: § 205(d) Rate Filing: First Revised ISA, Service Agreement No. 4082; Queue No. AD2–112 to be effective 9/29/2020.
Filed Date: 10/28/20.
Accession Number: 20201028–5052.
Comments Due: 5 p.m. ET 11/18/20.

Docket Numbers: ER21–228–000.
Applicants: GridLiance West LLC.
Description: Compliance filing: GLW TRBAA 2021 Annual Update to be effective 1/1/2021.
Filed Date: 10/28/20.
Accession Number: 20201028–5073.
Comments Due: 5 p.m. ET 11/18/20.

Docket Numbers: ER21–229–000.
Applicants: Southwest Power Pool, Inc.
Description: § 205(d) Rate Filing: Bylaws Revisions to Add Seats to Human Resources Committee and Finance Committee to be effective 1/1/2021.
Filed Date: 10/28/20.
Accession Number: 20201028–5089.
Comments Due: 5 p.m. ET 11/18/20.

Docket Numbers: ER21–230–000.
Applicants: Southwest Power Pool, Inc.
Description: § 205(d) Rate Filing: Revisions to Bylaws to Modify Duties of the Board of Directors to be effective 1/1/2021.
Filed Date: 10/28/20.
Accession Number: 20201028–5098.
Comments Due: 5 p.m. ET 11/18/20.

Docket Numbers: ER21–231–000.
Applicants: West Medway II, LLC.
Description: § 205(d) Rate Filing: Notice of Succession to be effective 10/9/2020.
Filed Date: 10/28/20.
Accession Number: 20201028–5109.
Comments Due: 5 p.m. ET 11/18/20.

Docket Numbers: ER21–232–000.
Applicants: Alabama Power Company.
Description: § 205(d) Rate Filing: OATT and Related Service Agreements Amendments relating to FPL & Gulf Merger to be effective 1/1/2021.
Filed Date: 10/28/20.
Accession Number: 20201028–5123.

Comments Due: 5 p.m. ET 11/18/20.

Docket Numbers: ER21–233–000.

Applicants: Alabama Power Company.

Description: § 205(d) Rate Filing: TFCAT and Related Service Agreements Amendments relating to FPL & Gulf Merger to be effective 1/1/2021.

Filed Date: 10/28/20.

Accession Number: 20201028–5125.

Comments Due: 5 p.m. ET 11/18/20.

Docket Numbers: ER21–234–000.

Applicants: Alabama Power Company.

Description: § 205(d) Rate Filing: Transition Services Agreement Amendment relating to FPL & Gulf Merger to be effective 1/1/2021.

Filed Date: 10/28/20.

Accession Number: 20201028–5127.

Comments Due: 5 p.m. ET 11/18/20.

Docket Numbers: ER21–235–000.

Applicants: Alabama Power Company.

Description: § 205(d) Rate Filing: IIC Amendment Filing Relating to FPL & Gulf Merger to be effective 1/1/2021.

Filed Date: 10/28/20.

Accession Number: 20201028–5130.

Comments Due: 5 p.m. ET 11/18/20.

Docket Numbers: ER21–236–000.

Applicants: Alabama Power Company.

Description: § 205(d) Rate Filing: Amendment of Southern's Tariff Vol. No. 4 relating to Merger of FPL & Gulf Power to be effective 1/1/2021.

Filed Date: 10/28/20.

Accession Number: 20201028–5132.

Comments Due: 5 p.m. ET 11/18/20.

Take notice that the Commission received the following electric securities filings:

Docket Numbers: ES20–54–000.

Applicants: Oklahoma Gas and Electric Company.

Description: Amendment [Exhibits C and D] to September 24, 2020 Application Under Section 204 of the Federal Power Act for Authorization to Issue Securities of Oklahoma Gas and Electric Company.

Filed Date: 10/27/20.

Accession Number: 20201027–5194.

Comments Due: 5 p.m. ET 11/17/20.

The filings are accessible in the Commission's eLibrary system (*https://elibrary.ferc.gov/idmws/search/fercgensearch.asp*) by querying the docket number.

Any person desiring to intervene or protest in any of the above proceedings must file in accordance with Rules 211 and 214 of the Commission's Regulations (18 CFR 385.211 and 385.214) on or before 5:00 p.m. Eastern time on the specified comment date. Protests may be considered, but intervention is necessary to become a party to the proceeding.

eFiling is encouraged. More detailed information relating to filing requirements, interventions, protests, service, and qualifying facilities filings can be found at: *http://www.ferc.gov/docs-filing/efiling/filing-req.pdf.* For other information, call (866) 208–3676 (toll free). For TTY, call (202) 502–8659.

Dated: October 28, 2020.

Nathaniel J. Davis, Sr.,

Deputy Secretary.

[FR Doc. 2020–24309 Filed 11–2–20; 8:45 am]

BILLING CODE 6717–01–P

DEPARTMENT OF ENERGY

Federal Energy Regulatory Commission

Combined Notice of Filings

Take notice that the Commission has received the following Natural Gas Pipeline Rate and Refund Report filings:

Docket Numbers: RP21–92–000.

Applicants: Portland Natural Gas Transmission System.

Description: § 4(d) Rate Filing: PXP Phase III Amendments Filing to be effective 12/1/2020.

Filed Date: 10/27/20.

Accession Number: 20201027–5024.

Comments Due: 5 p.m. ET 11/9/20.

Docket Numbers: RP21–93–000.

Applicants: Guardian Pipeline, L.L.C.

Description: Compliance filing 2019–2020 Gas Sales and Purchases Report.

Filed Date: 10/27/20.

Accession Number: 20201027–5032.

Comments Due: 5 p.m. ET 11/9/20.

Docket Numbers: RP21–94–000.

Applicants: Midwestern Gas Transmission Company.

Description: Compliance filing 2019–2020 Gas Sales and Purchases Report.

Filed Date: 10/27/20.

Accession Number: 20201027–5044.

Comments Due: 5 p.m. ET 11/9/20.

Docket Numbers: RP21–95–000.

Applicants: OkTex Pipeline Company, L.L.C.

Description: Compliance filing 2019–2020 Gas Sales and Purchases Report.

Filed Date: 10/27/20.

Accession Number: 20201027–5051.

Comments Due: 5 p.m. ET 11/9/20.

Docket Numbers: RP21–96–000.

Applicants: Viking Gas Transmission Company.

Description: Compliance filing 2019–2020 Gas Sales and Purchases Report.

Filed Date: 10/27/20.

Accession Number: 20201027–5054.

Comments Due: 5 p.m. ET 11/9/20.

Docket Numbers: RP21–97–000.

Applicants: Midwestern Gas Transmission Company.

Description: Compliance filing 2019–2020 Cashout Report.

Filed Date: 10/27/20.

Accession Number: 20201027–5058.

Comments Due: 5 p.m. ET 11/9/20.

Docket Numbers: RP21–98–000.

Applicants: Alliance Pipeline L.P.

Description: § 4(d) Rate Filing: APL Jackson Generation Delivery Point Filing to be effective 12/1/2020.

Filed Date: 10/27/20.

Accession Number: 20201027–5082.

Comments Due: 5 p.m. ET 11/9/20.

Docket Numbers: RP21–99–000.

Applicants: Rockies Express Pipeline LLC.

Description: § 4(d) Rate Filing: REX 2020–10–27 Non-Conforming Negotiated Rate Amendment to be effective 10/27/2020.

Filed Date: 10/27/20.

Accession Number: 20201027–5172.

Comments Due: 5 p.m. ET 11/9/20.

Docket Numbers: RP21–100–000.

Applicants: National Grid LNG, LLC.

Description: § 4(d) Rate Filing: 2020–10–27 National Grid LNG Rate Filing to be effective 12/1/2020.

Filed Date: 10/27/20.

Accession Number: 20201027–5176.

Comments Due: 5 p.m. ET 11/9/20

The filings are accessible in the Commission's eLibrary system (*https://elibrary.ferc.gov/idmws/search/fercgensearch.asp*) by querying the docket number.

Any person desiring to intervene or protest in any of the above proceedings must file in accordance with Rules 211 and 214 of the Commission's Regulations (18 CFR 385.211 and 385.214) on or before 5:00 p.m. Eastern time on the specified comment date. Protests may be considered, but intervention is necessary to become a party to the proceeding.

eFiling is encouraged. More detailed information relating to filing requirements, interventions, protests, service, and qualifying facilities filings can be found at: *http://www.ferc.gov/docs-filing/efiling/filing-req.pdf.* For other information, call (866) 208–3676 (toll free). For TTY, call (202) 502–8659.

Dated: October 28, 2020.

Nathaniel J. Davis, Sr.,

Deputy Secretary.

[FR Doc. 2020–24310 Filed 11–2–20; 8:45 am]

BILLING CODE 6717–01–P

DEPARTMENT OF ENERGY

Federal Energy Regulatory Commission

[Docket No. CP21–5–000]

Natural Gas Pipeline Company of America, LLC; Notice of Application and Establishing Intervention Deadline

Take notice that on October 8, 2020, Natural Gas Pipeline Company of America LLC (Natural), 3250 Lacey Road, 7th Floor, Downers Grove, Illinois 60515–7918, filed an application under section 7(b) and 7(c) of the Natural Gas Act (NGA), and Part 157 of the Commission's regulations requesting from the Commission an order granting: (1) Permission and approval to abandon Natural's lease and operation of certain transmission facilities from The Peoples Gas Light and Coke Company (Peoples) in Calumet Area of the City of Chicago in Cook County, Illinois (City); and (2) a certificate of public convenience and necessity to authorize Natural to continue to lease, operate, and maintain certain transmission facilities owned by Peoples in the Crawford and Calumet Areas in the City that were leased under a 2006 lease agreement between Natural and Peoples, under a new amended and restated lease agreement between Natural and Peoples. Natural states that Natural currently leases from Peoples, pursuant to a lease agreement between Natural and Peoples dated April 5, 2006, certain facilities located in the City that are used to provide service to certain of Natural's shippers. Natural states that following a notice of termination from Peoples, Natural and Peoples entered into an amended and restated lease agreement, dated October 7, 2020, that reflects the removal and discontinuation of the Calumet Area facilities from the lease arrangement and noted that the lease of property in the Crawford Area remains unchanged, all as more fully set forth in the application which is on file with the Commission and open for public inspection.

In addition to publishing the full text of this document in the **Federal Register**, the Commission provides all interested persons an opportunity to view and/or print the contents of this document via the internet through the Commission's Home Page (*http://ferc.gov*) using the ''eLibrary'' link. Enter the docket number excluding the last three digits in the docket number field to access the document. At this time, the Commission has suspended access to the Commission's Public Reference Room, due to the proclamation declaring a National Emergency concerning the Novel Coronavirus Disease (COVID–19), issued by the President on March 13, 2020. For assistance, contact the Federal Energy Regulatory Commission at *FERCOnlineSupport@ferc.gov* or call toll-free, (886) 208–3676 or TYY, (202) 502–8659.

Any questions regarding the proposed project should be directed to Kevin L. Palmer, Director, Natural Gas Pipeline Company of America LLC, 3250 Lacey Road, Suite 700, Downers Grove, Illinois 60515–7918, by phone at (630) 725–3074, or by email at *kevin_palmer@kindermorgan.com.*

Pursuant to Section 157.9 of the Commission's Rules of Practice and Procedure,[1] within 90 days of this Notice the Commission staff will either: Complete its environmental review and place it into the Commission's public record (eLibrary) for this proceeding; or issue a Notice of Schedule for Environmental Review. If a Notice of Schedule for Environmental Review is issued, it will indicate, among other milestones, the anticipated date for the Commission staff's issuance of the final environmental impact statement (FEIS) or environmental assessment (EA) for this proposal. The filing of an EA in the Commission's public record for this proceeding or the issuance of a Notice of Schedule for Environmental Review will serve to notify federal and state agencies of the timing for the completion of all necessary reviews, and the subsequent need to complete all federal authorizations within 90 days of the date of issuance of the Commission staff's FEIS or EA.

Public Participation

There are two ways to become involved in the Commission's review of this project: You can file comments on the project, and you can file a motion to intervene in the proceeding. There is no fee or cost for filing comments or intervening. The deadline for filing a motion to intervene is 5:00 p.m. Eastern Time on November 10, 2020.

Comments

Any person wishing to comment on the project may do so. Comments may include statements of support or objections to the project as a whole or specific aspects of the project. The more specific your comments, the more useful they will be. To ensure that your comments are timely and properly recorded, please submit your comments on or before November 10, 2020.

There are three methods you can use to submit your comments to the Commission. In all instances, please reference the Project docket number CP21–5–000 in your submission.

(1) You may file your comments electronically by using the eComment feature, which is located on the Commission's website at *www.ferc.gov* under the link to Documents and Filings. Using eComment is an easy method for interested persons to submit brief, text-only comments on a project;

(2) You may file your comments electronically by using the eFiling feature, which is located on the Commission's website (*www.ferc.gov*) under the link to Documents and Filings. With eFiling, you can provide comments in a variety of formats by attaching them as a file with your submission. New eFiling users must first create an account by clicking on ''eRegister.'' You will be asked to select the type of filing you are making; first select ''General'' and then select ''Comment on a Filing''; or

(3) You can file a paper copy of your comments by mailing them to the following address below.[2] Your written comments must reference the Project docket number (CP21–5–000).

Kimberly D. Bose, Secretary, Federal Energy Regulatory Commission, 888 First Street NE, Washington, DC 20426

The Commission encourages electronic filing of comments (options 1 and 2 above) and has eFiling staff available to assist you at (202) 502–8258 or *FercOnlineSupport@ferc.gov.*

Persons who comment on the environmental review of this project will be placed on the Commission's environmental mailing list, and will receive notification when the environmental documents (EA or EIS) are issued for this project and will be notified of meetings associated with the Commission's environmental review process.

The Commission considers all comments received about the project in determining the appropriate action to be taken. However, the filing of a comment alone will not serve to make the filer a party to the proceeding. To become a party, you must intervene in the proceeding. For instructions on how to intervene, see below.

Interventions

Any person, which includes individuals, organizations, businesses, municipalities, and other entities,[3] has

[1] 18 CFR (Code of Federal Regulations) § 157.9.

[2] Hand delivered submissions in docketed proceedings should be delivered to Health and Human Services, 12225 Wilkins Avenue, Rockville, Maryland 20852.

[3] 18 CFR 385.102(d).

the option to file a motion to intervene in this proceeding. Only intervenors have the right to request rehearing of Commission orders issued in this proceeding and to subsequently challenge the Commission's orders in the U.S. Circuit Courts of Appeal.

To intervene, you must submit a motion to intervene to the Commission in accordance with Rule 214 of the Commission's Rules of Practice and Procedure [4] and the regulations under the NGA [5] by the intervention deadline for the project, which is November 10, 2020. As described further in Rule 214, your motion to intervene must state, to the extent known, your position regarding the proceeding, as well as your interest in the proceeding. [For an individual, this could include your status as a landowner, ratepayer, resident of an impacted community, or recreationist. You do not need to have property directly impacted by the project in order to intervene.] For more information about motions to intervene, refer to the FERC website at *https://www.ferc.gov/resources/guides/how-to/intervene.asp.*

There are two ways to submit your motion to intervene. In both instances, please reference the Project docket number CP21–5–000 in your submission.

(1) You may file your motion to intervene by using the Commission's eFiling feature, which is located on the Commission's website (*www.ferc.gov*) under the link to Documents and Filings. New eFiling users must first create an account by clicking on ''eRegister.'' You will be asked to select the type of filing you are making; first select ''General'' and then select ''Intervention.'' The eFiling feature includes a document-less intervention option; for more information, visit *https://www.ferc.gov/docs-filing/efiling/document-less-intervention.pdf;* or

(2) You can file a paper copy of your motion to intervene, along with three copies, by mailing the documents to the address below.[6] Your motion to intervene must reference the Project docket number CP21–5–000.

Kimberly D. Bose, Secretary, Federal Energy Regulatory Commission, 888 First Street NE, Washington, DC 20426

The Commission encourages electronic filing of motions to intervene (option 1 above) and has eFiling staff available to assist you at (202) 502–8258 or *FercOnlineSupport@ferc.gov.*

Motions to intervene must be served on the applicant either by mail or email at: 3250 Lacey Road, Suite 700, Downers Grove, Illinois 60515–7918 or at *kevin_palmer@kindermorgan.com.* Any subsequent submissions by an intervenor must be served on the applicant and all other parties to the proceeding. Contact information for parties can be downloaded from the service list at the eService link on FERC Online. Service can be via email with a link to the document.

All timely, unopposed [7] motions to intervene are automatically granted by operation of Rule 214(c)(1).[8] Motions to intervene that are filed after the intervention deadline are untimely, and may be denied. Any late-filed motion to intervene must show good cause for being late and must explain why the time limitation should be waived and provide justification by reference to factors set forth in Rule 214(d) of the Commission's Rules and Regulations.[9] A person obtaining party status will be placed on the service list maintained by the Secretary of the Commission and will receive copies (paper or electronic) of all documents filed by the applicant and by all other parties.

Tracking the Proceeding

Throughout the proceeding, additional information about the project will be available from the Commission's Office of External Affairs, at (866) 208–FERC, or on the FERC website at *www.ferc.gov* using the ''eLibrary'' link as described above. The eLibrary link also provides access to the texts of all formal documents issued by the Commission, such as orders, notices, and rulemakings.

In addition, the Commission offers a free service called eSubscription which allows you to keep track of all formal issuances and submittals in specific dockets. This can reduce the amount of time you spend researching proceedings by automatically providing you with notification of these filings, document summaries, and direct links to the documents. For more information and to register, go to *www.ferc.gov/docs-filing/esubscription.asp.*

Intervention Deadline: 5:00 p.m. Eastern Time on November 10, 2020.

Dated: October 27, 2020.

Nathaniel J. Davis, Sr.,

Deputy Secretary.

[FR Doc. 2020–24327 Filed 11–2–20; 8:45 am]

BILLING CODE 6717–01–P

[4] 18 CFR 385.214.

[5] 18 CFR 157.10.

[6] Hand delivered submissions in docketed proceedings should be delivered to Health and Human Services, 12225 Wilkins Avenue, Rockville, Maryland 20852.

[7] The applicant has 15 days from the submittal of a motion to intervene to file a written objection to the intervention.

[8] 18 CFR 385.214(c)(1).

[9] 18 CFR 385.214(b)(3) and (d).

DEPARTMENT OF ENERGY

Federal Energy Regulatory Commission

[Docket No. EL21–13–000]

Californians for Green Nuclear Power, Inc. v. North American Electric Reliability Corporation, Western Electricity Coordinating Council, California Independent System Operator Corporation, California Public Utilities Commission, California State Water Resources Control Board, and California State Lands Commission; Notice of Complaint

Take notice that on October 26, 2020, pursuant to the Federal Power Act, the Natural Gas Act of 1938, the Federal Pipeline Safety Regulations,[1] and section 206 of the Rules of Practice and Procedure of the Federal Energy Regulatory Commission,[2] Californians for Green Nuclear Power, Inc. (Complainant) filed a formal complaint against North American Electric Reliability Corporation, Western Electricity Coordinating Council, California Independent System Operator Corporation, California Public Utilities Commission, California State Water Resources Control Board, and California State Lands Commission, (Respondent) alleging that, Respondents failed to properly analyze the bulk electric system and bulk natural gas system consequences in light of certain California-specific hazards in connection with the approval of the voluntary plan to close Diablo Canyon Power Plant in 2025, all as more fully explained in the complaint.

The Complainant certifies that copies of the complaint were served on the contacts listed for Respondents in the Commission's list of Corporate Officials.

Any person desiring to intervene or to protest this filing must file in accordance with Rules 211 and 214 of the Commission's Rules of Practice and Procedure (18 CFR 385.211, 385.214). Protests will be considered by the Commission in determining the appropriate action to be taken, but will not serve to make protestants parties to

[1] The Federal Power Act, 16 U.S.C. 791 *et seq.,* the Energy Policy Act of 2005, 42 U.S.C. 13201 *et seq.* (2005), the Natural Gas Act of 1938 15 U.S.C. 717(b) *et seq.,* and Federal Pipeline Safety Regulations, 49 CFR 192 (2020).

[2] 18 CFR 385.206 (2020).

the proceeding. Any person wishing to become a party must file a notice of intervention or motion to intervene, as appropriate. The Respondent's answer and all interventions, or protests must be filed on or before the comment date. The Respondent's answer, motions to intervene, and protests must be served on the Complainants.

The Commission strongly encourages electronic filings of comments, protests and interventions in lieu of paper using the ''eFiling'' link at *http://www.ferc.gov.* Persons unable to file electronically may mail similar pleadings to the Federal Energy Regulatory Commission, 888 First Street NE, Washington, DC 20426. Hand delivered submissions in docketed proceedings should be delivered to Health and Human Services, 12225 Wilkins Avenue, Rockville, Maryland 20852.

In addition to publishing the full text of this document in the **Federal Register**, the Commission provides all interested persons an opportunity to view and/or print the contents of this document via the internet through the Commission's Home Page (*http://ferc.gov*) using the ''eLibrary'' link. Enter the docket number excluding the last three digits in the docket number field to access the document. At this time, the Commission has suspended access to the Commission's Public Reference Room, due to the proclamation declaring a National Emergency concerning the Novel Coronavirus Disease (COVID–19), issued by the President on March 13, 2020. For assistance, contact the Federal Energy Regulatory Commission at *FERCOnlineSupport@ferc.gov,* or call toll-free, (886) 208–3676 or TYY, (202) 502–8659.

Comment Date: 5:00 p.m. Eastern Time on November 16, 2020.

Dated: October 27, 2020.

Kimberly D. Bose,

Secretary.

[FR Doc. 2020–24275 Filed 11–2–20; 8:45 am]

BILLING CODE 6717–01–P

DEPARTMENT OF ENERGY

Federal Energy Regulatory Commission

[Docket No. ER21–207–000]

Rancho Seco Solar, LLC; Supplemental Notice That Initial Market-Based Rate Filing Includes Request for Blanket Section 204 Authorization

This is a supplemental notice in the above-referenced Rancho Seco Solar, LLC's application for market-based rate authority, with an accompanying rate tariff, noting that such application includes a request for blanket authorization, under 18 CFR part 34, of future issuances of securities and assumptions of liability.

Any person desiring to intervene or to protest should file with the Federal Energy Regulatory Commission, 888 First Street NE, Washington, DC 20426, in accordance with Rules 211 and 214 of the Commission's Rules of Practice and Procedure (18 CFR 385.211 and 385.214). Anyone filing a motion to intervene or protest must serve a copy of that document on the Applicant.

Notice is hereby given that the deadline for filing protests with regard to the applicant's request for blanket authorization, under 18 CFR part 34, of future issuances of securities and assumptions of liability, is November 16, 2020.

The Commission encourages electronic submission of protests and interventions in lieu of paper, using the FERC Online links at *http://www.ferc.gov.* To facilitate electronic service, persons with internet access who will eFile a document and/or be listed as a contact for an intervenor must create and validate an eRegistration account using the eRegistration link. Select the eFiling link to log on and submit the intervention or protests.

Persons unable to file electronically may mail similar pleadings to the Federal Energy Regulatory Commission, 888 First Street NE, Washington, DC 20426. Hand delivered submissions in docketed proceedings should be delivered to Health and Human Services, 12225 Wilkins Avenue, Rockville, Maryland 20852.

In addition to publishing the full text of this document in the **Federal Register**, the Commission provides all interested persons an opportunity to view and/or print the contents of this document via the internet through the Commission's Home Page (*http://ferc.gov*) using the ''eLibrary'' link. Enter the docket number excluding the last three digits in the docket number field to access the document. At this time, the Commission has suspended access to the Commission's Public Reference Room, due to the proclamation declaring a National Emergency concerning the Novel Coronavirus Disease (COVID–19), issued by the President on March 13, 2020. For assistance, contact the Federal Energy Regulatory Commission at *FERCOnlineSupport@ferc.gov* or call toll-free, (886) 208–3676 or TYY, (202) 502–8659.

Dated: October 27, 2020.

Nathaniel J. Davis, Sr.,

Deputy Secretary.

[FR Doc. 2020–24329 Filed 11–2–20; 8:45 am]

BILLING CODE 6717–01–P

DEPARTMENT OF ENERGY

Federal Energy Regulatory Commission

[Docket No. ER21–202–000]

Centrica Business Solutions Optimize, LLC; Supplemental Notice That Initial Market-Based Rate Filing Includes Request for Blanket Section 204 Authorization

This is a supplemental notice in the above-referenced Centrica Business Solutions Optimize, LLC's application for market-based rate authority, with an accompanying rate tariff, noting that such application includes a request for blanket authorization, under 18 CFR part 34, of future issuances of securities and assumptions of liability.

Any person desiring to intervene or to protest should file with the Federal Energy Regulatory Commission, 888 First Street NE, Washington, DC 20426, in accordance with Rules 211 and 214 of the Commission's Rules of Practice and Procedure (18 CFR 385.211 and 385.214). Anyone filing a motion to intervene or protest must serve a copy of that document on the Applicant.

Notice is hereby given that the deadline for filing protests with regard to the applicant's request for blanket authorization, under 18 CFR part 34, of future issuances of securities and assumptions of liability, is November 16, 2020.

The Commission encourages electronic submission of protests and interventions in lieu of paper, using the FERC Online links at *http://www.ferc.gov.* To facilitate electronic service, persons with internet access who will eFile a document and/or be listed as a contact for an intervenor must create and validate an

eRegistration account using the eRegistration link. Select the eFiling link to log on and submit the intervention or protests.

Persons unable to file electronically may mail similar pleadings to the Federal Energy Regulatory Commission, 888 First Street NE, Washington, DC 20426. Hand delivered submissions in docketed proceedings should be delivered to Health and Human Services, 12225 Wilkins Avenue, Rockville, Maryland 20852.

In addition to publishing the full text of this document in the **Federal Register**, the Commission provides all interested persons an opportunity to view and/or print the contents of this document via the internet through the Commission's Home Page (*http://ferc.gov*) using the ''eLibrary'' link. Enter the docket number excluding the last three digits in the docket number field to access the document. At this time, the Commission has suspended access to the Commission's Public Reference Room, due to the proclamation declaring a National Emergency concerning the Novel Coronavirus Disease (COVID–19), issued by the President on March 13, 2020. For assistance, contact the Federal Energy Regulatory Commission at *FERCOnlineSupport@ferc.gov* or call toll-free, (886) 208–3676 or TYY, (202) 502–8659.

Dated: October 27, 2020.

Nathaniel J. Davis, Sr.,

Deputy Secretary.

[FR Doc. 2020–24328 Filed 11–2–20; 8:45 am]

BILLING CODE 6717–01–P

FEDERAL COMMUNICATIONS COMMISSION

[OMB 3060–0715; FRS 17205]

Information Collection Being Submitted for Review and Approval to Office of Management and Budget

AGENCY: Federal Communications Commission.

ACTION: Notice and request for comments.

SUMMARY: As part of its continuing effort to reduce paperwork burdens, as required by the Paperwork Reduction Act (PRA) of 1995, the Federal Communications Commission (FCC or the Commission) invites the general public and other Federal Agencies to take this opportunity to comment on the following information collection. Pursuant to the Small Business Paperwork Relief Act of 2002, the FCC seeks specific comment on how it might ''further reduce the information collection burden for small business concerns with fewer than 25 employees.''

The Commission may not conduct or sponsor a collection of information unless it displays a currently valid Office of Management and Budget (OMB) control number. No person shall be subject to any penalty for failing to comply with a collection of information subject to the PRA that does not display a valid OMB control number.

DATES: Written comments and recommendations for the proposed information collection should be submitted on or before December 3, 2020.

ADDRESSES: Comments should be sent to *www.reginfo.gov/public/do/PRAMain.* Find this particular information collection by selecting ''Currently under 30-day Review—Open for Public Comments'' or by using the search function. Your comment must be submitted into *www.reginfo.gov* per the above instructions for it to be considered. In addition to submitting in *www.reginfo.gov* also send a copy of your comment on the proposed information collection to Nicole Ongele, FCC, via email to *PRA@fcc.gov* and to *Nicole.Ongele@fcc.gov.* Include in the comments the OMB control number as shown in the **SUPPLEMENTARY INFORMATION** below.

FOR FURTHER INFORMATION CONTACT: For additional information or copies of the information collection, contact Nicole Ongele at (202) 418–2991. To view a copy of this information collection request (ICR) submitted to OMB: (1) Go to the web page *http://www.reginfo.gov/public/do/PRAMain,* (2) look for the section of the web page called ''Currently Under Review,'' (3) click on the downward-pointing arrow in the ''Select Agency'' box below the ''Currently Under Review'' heading, (4) select ''Federal Communications Commission'' from the list of agencies presented in the ''Select Agency'' box, (5) click the ''Submit'' button to the right of the ''Select Agency'' box, (6) when the list of FCC ICRs currently under review appears, look for the Title of this ICR and then click on the ICR Reference Number. A copy of the FCC submission to OMB will be displayed.

SUPPLEMENTARY INFORMATION: As part of its continuing effort to reduce paperwork burdens, as required by the Paperwork Reduction Act (PRA) of 1995 (44 U.S.C. 3501–3520), the FCC invited the general public and other Federal Agencies to take this opportunity to comment on the following information collection. Comments are requested concerning: (a) Whether the proposed collection of information is necessary for the proper performance of the functions of the Commission, including whether the information shall have practical utility; (b) the accuracy of the Commission's burden estimates; (c) ways to enhance the quality, utility, and clarity of the information collected; and (d) ways to minimize the burden of the collection of information on the respondents, including the use of automated collection techniques or other forms of information technology. Pursuant to the Small Business Paperwork Relief Act of 2002, Public Law 107–198, see 44 U.S.C. 3506(c)(4), the FCC seeks specific comment on how it might ''further reduce the information collection burden for small business concerns with fewer than 25 employees.''

OMB Control Number: 3060–0715.

Title: Telecommunications Carriers' Use of Customer Proprietary Network Information (CPNI) and Other Customer Information, CC Docket No. 96–115.

Form Number: N/A.

Type of Review: Extension of a currently approved collection.

Respondents: Business or other for-profit entities, and state, local, or tribal government.

Number of Respondents: 3,390 respondents; 76,441,232 responses.

Estimated Time per Response: .002–50 hours.

Frequency of Response: On occasion, annual, and one-time reporting requirements; recordkeeping; and third party disclosure requirements.

Obligation to Respond: Mandatory. Statutory authority for these collections are contained in Section 222 of the Communications Act of 1934, as amended, 47 U.S.C. Section 222.

Total Annual Burden: 204,523 hours.

Total Annual Cost: $3,000,000.

Privacy Act Impact Assessment: No impact.

Nature and Extent of Confidentiality: The Commission is not requesting that the respondents submit confidential information to the FCC. Respondents may, however, request confidential treatment for information they believe to be confidential under 47 CFR 0.459 of the Commission's rules.

Needs and Uses: Section 222 of the Communications Act of 1934, as amended, 47 U.S.C. 222, establishes the duty of telecommunications carriers to protect the confidentiality of its customers' proprietary information. This Customer Proprietary Network Information (CPNI) includes personally identifiable information derived from a customer's relationship with a provider of telecommunications services. This

information collection implements the statutory obligations of Section 222. These regulations impose safeguards to protect customers' CPNI against unauthorized access and disclosure. In March 2007, the Commission adopted new rules that focused on the efforts of providers of telecommunications services to prevent pretexting. These rules require providers of telecommunications services to adopt additional privacy safeguards that, the Commission believes, will limit pretexters' ability to obtain unauthorized access to the type of personal customer information from carriers that the Commission regulates. In addition, in furtherance of the Telephone Records and Privacy Protection Act of 2006, the Commission's rules help ensure that law enforcement will have necessary tools to investigate and enforce prohibitions on illegal access to customer records.

Marlene Dortch,

Secretary, Office of the Secretary.

[FR Doc. 2020–24360 Filed 11–2–20; 8:45 am]

BILLING CODE 6712–01–P

FEDERAL COMMUNICATIONS COMMISSION

[OMB 3060–0805, OMB 0812; FRS 17208]

Information Collections Being Submitted for Review and Approval to Office of Management and Budget

AGENCY: Federal Communications Commission.

ACTION: Notice and request for comments.

SUMMARY: As part of its continuing effort to reduce paperwork burdens, as required by the Paperwork Reduction Act (PRA) of 1995, the Federal Communications Commission (FCC or the Commission) invites the general public and other Federal Agencies to take this opportunity to comment on the following information collection. Pursuant to the Small Business Paperwork Relief Act of 2002, the FCC seeks specific comment on how it might ''further reduce the information collection burden for small business concerns with fewer than 25 employees.''

The Commission may not conduct or sponsor a collection of information unless it displays a currently valid Office of Management and Budget (OMB) control number. No person shall be subject to any penalty for failing to comply with a collection of information subject to the PRA that does not display a valid OMB control number.

DATES: Written comments and recommendations for the proposed information collection should be submitted on or before December 3, 2020.

ADDRESSES: Comments should be sent to *www.reginfo.gov/public/do/PRAMain.* Find this particular information collection by selecting ''Currently under 30-day Review—Open for Public Comments'' or by using the search function. Your comment must be submitted into *www.reginfo.gov* per the above instructions for it to be considered. In addition to submitting in *www.reginfo.gov* also send a copy of your comment on the proposed information collection to Nicole Ongele, FCC, via email to *PRA@fcc.gov* and to *Nicole.Ongele@fcc.gov.* Include in the comments the OMB control number as shown in the **SUPPLEMENTARY INFORMATION** below.

FOR FURTHER INFORMATION CONTACT: For additional information or copies of the information collection, contact Nicole Ongele at (202) 418–2991. To view a copy of this information collection request (ICR) submitted to OMB: (1) Go to the web page *http://www.reginfo.gov/public/do/PRAMain,* (2) look for the section of the web page called ''Currently Under Review,'' (3) click on the downward-pointing arrow in the ''Select Agency'' box below the ''Currently Under Review'' heading, (4) select ''Federal Communications Commission'' from the list of agencies presented in the ''Select Agency'' box, (5) click the ''Submit'' button to the right of the ''Select Agency'' box, (6) when the list of FCC ICRs currently under review appears, look for the Title of this ICR and then click on the ICR Reference Number. A copy of the FCC submission to OMB will be displayed.

SUPPLEMENTARY INFORMATION: As part of its continuing effort to reduce paperwork burdens, as required by the Paperwork Reduction Act (PRA) of 1995 (44 U.S.C. 3501–3520), the FCC invited the general public and other Federal Agencies to take this opportunity to comment on the following information collection. Comments are requested concerning: (a) Whether the proposed collection of information is necessary for the proper performance of the functions of the Commission, including whether the information shall have practical utility; (b) the accuracy of the Commission's burden estimates; (c) ways to enhance the quality, utility, and clarity of the information collected; and (d) ways to minimize the burden of the collection of information on the respondents, including the use of automated collection techniques or other forms of information technology. Pursuant to the Small Business Paperwork Relief Act of 2002, Public Law 107–198, see 44 U.S.C. 3506(c)(4), the FCC seeks specific comment on how it might ''further reduce the information collection burden for small business concerns with fewer than 25 employees.''

OMB Control Number: 3060–0805.

Title: 700 MHz Eligibility, Regional Planning Requirements, and 4.9 GHz Guidelines (47 CFR 90.523, 90.527, and 90.1211).

Form No.: N/A.

Type of Review: Extension of a currently approved collection.

Respondents: Business or other for profit; not-for-profit institutions; state, local or tribal government.

Number of Respondents and Responses: 1,161 respondents; 1,161 responses.

Estimated Time Per Response: 1 hour–628 hours.

Frequency of Response: On occasion reporting and one-time reporting requirements; third party disclosure.

Obligation to Respond: Required to obtain or retain benefits (47 CFR 90.523, 90.527), and voluntary (47 CFR 90.1211). Statutory authority for this information collection is contained in 4(i), 11, 303(g), 303(r), 332(c)(7), and 337(f) of the Communications Act of 1934, as amended, 47 U.S.C. 154(i), 161, 303(g), 303(r), 332(c)(7), and 337(f), unless otherwise noted.

Total Annual Burden: 35,646 hours.

Total Annual Cost: None.

Privacy Act Impact Assessment: No impact.

Nature and Extent of Confidentiality: There is no need for confidentiality.

Needs and Uses: Section 90.523 requires that nongovernmental organizations that provide services which protect the safety of life or property obtain a written statement from an authorizing state or local government entity to support the nongovernmental organization's application for assignment of 700 MHz frequencies. *Section 90.527* requires 700 MHz regional planning regions to submit an initial plan for use of the 700 MHz general use spectrum in the consolidated narrowband segment 769–775 MHz and 799–805 MHz. Regional planning committees may modify plans by written request, which must contain the full text of the modification and certification that the modification was successfully coordinated with adjacent regions. Regional planning promotes a fair and open process in developing allocation assignments by requiring input from eligible entities in the allocation decisions and the application

technical review/approval process. Entities that seek inclusion in the plan to obtain future licenses are considered third party respondents. *Section 90.1211* authorizes the fifty-five 700 MHz regional planning committees to develop and submit on a voluntary basis a plan on guidelines for coordination procedures to facilitate the shared use of the 4940–4990 MHz (4.9 GHz) band. The Commission has stayed this requirement indefinitely. Applicants are granted a geographic area license for the entire fifty MHz of 4.9 GHz spectrum over a geographical area defined by the boundaries of their jurisdiction—city, county or state. Accordingly, licensees are required to coordinate their operations in the shared band to avoid interference, a common practice when joint operations are conducted.

Commission staff will use the information to assign licenses, determine regional spectrum requirements and to develop technical standards. The information will also be used to determine whether prospective licensees operate in compliance with the Commission's rules. Without such information, the Commission could not accommodate regional requirements or provide for the efficient use of the available frequencies. This information collection includes rules to govern the operation and licensing of the 700 MHz and 4.9 GHz bands rules and regulation to ensure that licensees continue to fulfill their statutory responsibilities in accordance with the Communications Act of 1934, as amended. Such information will continue to be used to verify that applicants are legally and technically qualified to hold licenses, and to determine compliance with Commission rules.

OMB Control Number: 3060–0812.

Title: Regulatory Fee True-Up, Waiver or Exemption.

Form Number: N/A.

Type of Review: Extension of a currently approved collection.

Respondents: Business or other for-profit, Not-for-profit institutions, State, local or Tribal governments.

Number of Respondents and Responses: 19,820 respondents and 19,920 responses.

Estimated Time per Response: 0.25 hours–1 hour.

Frequency of Response: On occasion reporting requirements; annual recordkeeping requirement.

Obligation to Respond: Required to obtain or retain benefits. Statutory authority for this information collection is contained in 47 U.S.C. 158 and 159.

Total Annual Burden: 10,030 hours.

Total Annual Cost: No Cost.

Privacy Act Impact Assessment: No impact(s).

Nature and Extent of Confidentiality: Licensees or regulatees concerned about disclosure of sensitive information in any submissions to the Commission may request confidential treatment pursuant to 47 CFR 0.459 of the Commission's rules.

Needs and Uses: The Commission will submit this information collection to the Office of Management and Budget (OMB) after this 60-day comment period in order to obtain the full three-year clearance from them.

The Commission provides broadcast licensees and commercial mobile radio service (CMRS) licensees with a ''true-up'' opportunity to update or otherwise correct their assessed fee amounts well before the actual due date for payment of regulatory fees. Providing a ''true-up'' opportunity is necessary because the data sources that are used to generate the fee assessments are subject to change at time of transfer or assignment of the license. The ''true-up'' is also an opportunity for regulatees to correct inaccuracies.

Per 47 CFR 1.1119 and 1.1166, the FCC may, upon a properly submitted written request, waive or defer collection of an application fee or waive, reduce, or defer payment of a regulatory fee in a specific instance for good cause shown where such action would promote the public interest. When submitting the request, no specific form is required.

FCC requires that when licensees or regulates request exemption from regulatory fees based on their non-profit status, they must file a one-time documentation sufficient to establish their non-profit status. The documentation may take the form of an IRS Determination Letter, a state charter indicating non-profit status, proof of church affiliation indicating tax exempt status, etc.

Federal Communications Commission.

Marlene Dortch,

Secretary, Office of the Secretary.

[FR Doc. 2020–24361 Filed 11–2–20; 8:45 am]

BILLING CODE 6712–01–P

FEDERAL COMMUNICATIONS COMMISSION

Federal Advisory Committee Act; Technological Advisory Council

AGENCY: Federal Communications Commission.

ACTION: Notice of public meeting.

SUMMARY: In accordance with the Federal Advisory Committee Act, this notice advises interested persons that the Federal Communications Commission's (FCC) Technological Advisory Council will hold a meeting on Tuesday December 1, 2020 via conference call and available to the public via the internet at *http://www.fcc.gov/live,* from 10:00 a.m. to 3 p.m.

DATES: Tuesday December 1, 2020.

ADDRESSES: Federal Communications Commission, 45 L Street NE, Washington, DC 20554.

FOR FURTHER INFORMATION CONTACT: Michael Ha, Chief, Policy and Rules Division 202–418–2099; *michael.ha@fcc.gov.*

SUPPLEMENTARY INFORMATION: At the December 1st meeting, the FCC Technological Advisory Council will hear presentations from its four working groups: 5G/IOT/V–RAN, Future of Unlicensed Operations, Artificial Intelligence, and 5G Radio Access Network Technology. Meetings are broadcast live with open captioning over the internet from the FCC Live web page at *http://www.fcc.gov/live/.* The public may submit written comments before the meeting to Michael Ha, the FCC's Designated Federal Officer for Technological Advisory Council by email: *michael.ha@fcc.gov* or U.S. Postal Service Mail (Michael Ha, Federal Communications Commission, 45 L Street NE, Washington, DC 20554). Open captioning will be provided for this event. Other reasonable accommodations for people with disabilities are available upon request. Requests for such accommodations should be submitted via email to *fcc504@fcc.gov* or by calling the Office of Engineering and Technology at 202–418–2470 (voice), (202) 418–1944 (fax). Such requests should include a detailed description of the accommodation needed. In addition, please include your contact information. Please allow at least five days advance notice; last minute requests will be accepted but may not be possible to fill.

Federal Communications Commission.

Ronald T. Repasi,

Acting Chief, Office of Engineering and Technology.

[FR Doc. 2020–24349 Filed 11–2–20; 8:45 am]

BILLING CODE 6712–01–P

FEDERAL COMMUNICATIONS COMMISSION

[OMB 3060–0761; FRS 17198]

Information Collections Being Reviewed by the Federal Communications Commission

AGENCY: Federal Communications Commission.

ACTION: Notice and request for comments.

SUMMARY: As part of its continuing effort to reduce paperwork burdens, and as required by the Paperwork Reduction Act of 1995 (PRA), the Federal Communications Commission (FCC or Commission) invites the general public and other Federal agencies to take this opportunity to comment on the following information collections. Comments are requested concerning: Whether the proposed collection of information is necessary for the proper performance of the functions of the Commission, including whether the information shall have practical utility; the accuracy of the Commission's burden estimate; ways to enhance the quality, utility, and clarity of the information collected; ways to minimize the burden of the collection of information on the respondents, including the use of automated collection techniques or other forms of information technology; and ways to further reduce the information collection burden on small business concerns with fewer than 25 employees.

The FCC may not conduct or sponsor a collection of information unless it displays a currently valid Office of Management and Budget (OMB) control number. No person shall be subject to any penalty for failing to comply with a collection of information subject to the PRA that does not display a valid OMB control number.

DATES: Written PRA comments should be submitted on or before January 4, 2021. If you anticipate that you will be submitting comments but find it difficult to do so within the period of time allowed by this notice, you should advise the contact listed below as soon as possible.

ADDRESSES: Direct all PRA comments to Cathy Williams, FCC, via email to *PRA@fcc.gov* and to *Cathy.Williams@fcc.gov.*

FOR FURTHER INFORMATION CONTACT: For additional information about the information collection, contact Cathy Williams at (202) 418–2918.

SUPPLEMENTARY INFORMATION:

OMB Control Number: 3060–0761.

Title: Section 79.1, Closed Captioning of Video Programming, CG Docket No. 05–231.

Form No.: N/A.

Type of Review: Extension of a currently approved collection.

Respondents: Business or other for-profit entities; Individuals or households; and Not-for-profit entities.

Number of Respondents and Responses: 64,218 respondents; 521,074 responses.

Estimated Time per Response: 0.5 (30 minutes) to 30 hours.

Frequency of Response: Annual reporting requirement; Third party disclosure requirement; Recordkeeping requirement.

Obligation to Respond: Required to obtain or retain benefits. The statutory authority for this obligation is found at section 713 of the Communications Act of 1934, as amended, 47 U.S.C. 613, and implemented at 47 CFR 79.1.

Total Annual Burden: 727,143 hours.

Annual Cost Burden: $34,350,444.

Nature and Extent of Confidentiality: Confidentiality is an issue to the extent that individuals and households provide personally identifiable information, which is covered under the FCC's system of records notice (SORN), FCC/CGB–1, ''Informal Complaints, Inquiries, and Requests for Dispute Assistance.'' As required by the Privacy Act, 5 U.S.C. 552a, the Commission also published a SORN, FCC/CGB–1 ''Informal Complaints, Inquiries, and Requests for Dispute Assistance'' in the **Federal Register** on August 15, 2014, published at 79 FR 48152, which became effective on September 24, 2014.

Privacy Act Impact Assessment: Yes.

Needs and Uses: The Commission seeks to extend existing information collection requirements in its closed captioning rules (47 CFR 79.1), which require that, with some exceptions, all new video programming, and 75 percent of ''pre-rule'' programming, be closed captioned. The existing collections include petitions by video programming providers, producers, and owners for exemptions from the closed captioning rules, responses by commenters, and replies; complaints by viewers alleging violations of the closed captioning rules, responses by video programming distributors (VPDs) and video programmers, recordkeeping in support of complaint responses, and compliance ladder obligations in the event of a pattern or trend of violations; recordkeeping of monitoring and maintenance activities; caption quality best practices procedures; making video programming distributor contact information available to viewers in phone directories, on the Commission's website and the websites of video programming distributors (if they have them), and in billing statements (to the extent video programming distributors issue them); and video programmers filing of contact information and compliance certifications with the Commission.

On February 19, 2016, the Commission adopted the *Closed Captioning Quality Second Report and Order,* published at 81 FR 57473, August 23, 2016, amending its rules to allocate the responsibilities of VPDs and video programmers with respect to the provision and quality of closed captioning. The Commission took the following actions, among others:

(a) Required video programmers to file certifications with the Commission that (1) the video programmer (i) is in compliance with the rules requiring the inclusion of closed captions, and (ii) either is in compliance with the captioning quality standards or has adopted and is following related Best Practices; or (2) is exempt from the captioning obligation and specifies the exemption claimed.

(b) Revised the procedures for receiving, serving, and addressing television closed captioning complaints in accordance with a burden-shifting compliance model.

(c) Established a compliance ladder for the Commission's television closed captioning quality requirements.

(d) Required VPDs to use the Commission's web form when providing contact information to the VPD registry.

(e) Required video programmers to register their contact information with the Commission for the receipt and handling of written closed captioning complaints.

Federal Communications Commission.

Marlene Dortch,

Secretary, Office of the Secretary.

[FR Doc. 2020–24359 Filed 11–2–20; 8:45 am]

BILLING CODE 6712–01–P

FEDERAL RESERVE SYSTEM

Change in Bank Control Notices; Acquisitions of Shares of a Bank or Bank Holding Company

The notificants listed below have applied under the Change in Bank Control Act (Act) (12 U.S.C. 1817(j)) and § 225.41 of the Board's Regulation Y (12 CFR 225.41) to acquire shares of a bank or bank holding company. The factors that are considered in acting on the applications are set forth in paragraph 7 of the Act (12 U.S.C. 1817(j)(7)).

The public portions of the applications listed below, as well as

other related filings required by the Board, if any, are available for immediate inspection at the Federal Reserve Bank(s) indicated below and at the offices of the Board of Governors. This information may also be obtained on an expedited basis, upon request, by contacting the appropriate Federal Reserve Bank and from the Board's Freedom of Information Office at *https://www.federalreserve.gov/foia/request.htm.* Interested persons may express their views in writing on the standards enumerated in paragraph 7 of the Act.

Comments regarding each of these applications must be received at the Reserve Bank indicated or the offices of the Board of Governors, Ann E. Misback, Secretary of the Board, 20th Street and Constitution Avenue NW, Washington DC 20551–0001, not later than November 18, 2020.

A. Federal Reserve Bank of Atlanta (Kathryn Haney, Assistant Vice President) 1000 Peachtree Street NE, Atlanta, Georgia 30309. Comments can also be sent electronically to *Applications.Comments@atl.frb.org:*

1. *Bartow Morgan, Jr., Richard Brand Morgan, Patricia Morgan Thomas, James Bradford Smith, all of Atlanta, Georgia, Patricia MacLaurin Morgan Farrior, Tampa, Florida, and Paul Mangum Morgan, New York, New York;* as a group acting in concert to acquire voting shares Georgia Banking Company, Inc., and thereby indirectly acquire voting shares of Georgia Banking Company, both of Sandy Springs, Georgia.

B. Federal Reserve Bank of Chicago (Colette A. Fried, Assistant Vice President) 230 South LaSalle Street, Chicago, Illinois 60690–1414:

1. *Marilyn L. Cravens Stock Trust, Sanborn, Iowa, Marilyn Lee Cravens, as trustee, Spirit Lake, Iowa;* to acquire voting shares of Milford Bancorporation, and thereby indirectly acquire voting shares of United Community Bank, both of Milford, Iowa.

C. Federal Reserve Bank of Minneapolis (Chris P. Wangen, Assistant Vice President) 90 Hennepin Avenue, Minneapolis, Minnesota 55480–0291:

1. *The 2020 Jeffory A. Erickson Irrevocable Trust No. 1, the 2020 Jeffory A. Erickson Irrevocable Trust No. 2, the 2020 Jeffory A. Erickson Irrevocable Trust No. 3, and the 2020 Jeffory A. Erickson Irrevocable Trust No. 4, (collectively, the ''Erickson Trusts''), Scott A. Erickson, as trust advisor and co-trustee with Matthew P. Bock, as co-trustee, to one or more trusts in the Erickson Trusts, all of Sioux Falls, South Dakota;* to join Jeffory A. Erickson in the Erickson family shareholder group, a group acting in concert to acquire voting shares of Leackco Bank Holding Company, Wolsey, South Dakota, and thereby indirectly acquire voting shares of American Bank & Trust, Wessington Springs, South Dakota.

In addition, Scott A. Erickson, Matthew P. Bock, and Jamie L. Brown, also of Sioux Falls, South Dakota, and all individually, to join the Erickson family shareholder group to retain voting shares of Leackco Bank Holding Company, and thereby indirectly retain voting shares of American Bank & Trust.

Board of Governors of the Federal Reserve System, October 29, 2020.

Michele Taylor Fennell,

Deputy Associate Secretary of the Board.

[FR Doc. 2020–24334 Filed 11–2–20; 8:45 am]

BILLING CODE P

FEDERAL TRADE COMMISSION

Agency Information Collection Activities; Submission for OMB Review; Comment Request

AGENCY: Federal Trade Commission (FTC).

ACTION: Notice and request for comment.

SUMMARY: The FTC requests that the Office of Management and Budget (OMB) extend for three years the current Paperwork Reduction Act (PRA) clearance for information collection requirements contained in the Use of Prenotification Negative Option Plans (Negative Option Rule or Rule). That clearance expires on December 31, 2020.

DATES: Comments must be received by December 3, 2020.

ADDRESSES: Written comments and recommendations for the proposed information collection should be sent within 30 days of publication of this notice to *www.reginfo.gov/public/do/PRAMain.* Find this particular information collection by selecting ''Currently under 30-day Review—Open for Public Comments'' or by using the search function. The *reginfo.gov* web link is a United States Government website produced by OMB and the General Services Administration (GSA). Under PRA requirements, OMB's Office of Information and Regulatory Affairs (OIRA) reviews Federal information collections.

FOR FURTHER INFORMATION CONTACT: Hampton Newsome, Attorney, Division of Enforcement, Federal Trade Commission, Room CC–9528, 600 Pennsylvania Avenue NW, Washington, DC 20580, (202) 326–2889.

SUPPLEMENTARY INFORMATION:

Title: Use of Prenotification Negative Option Plans (Negative Option Rule or Rule), 16 CFR 425.[1]

OMB Control Number: 3084–0104.

Type of Review: Extension of a currently approved collection.

Likely Respondents: Sellers of prenotification subscription plans.

Estimated Annual Hours Burden: 9,750 hours.

Estimated Annual Cost Burden: $572,300 (solely related to labor costs).

Estimated Capital or Other Non-Labor Cost: $0 or *de minimis.*

Abstract: The Negative Option Rule governs the operation of prenotification subscription plans. Under these types of plans—which can include things such as a book of the month club, food of the month club, or clothing items of the month club—a seller provides a consumer with automatic shipments of merchandise unless the consumer affirmatively notifies the seller they do not want the shipment. The Rule requires that a seller notify a member that they will automatically ship merchandise to the member and bill the member for the merchandise if the subscriber fails to expressly reject the merchandise beforehand within a prescribed time. The Rule protects consumers by: (a) Requiring that promotional materials disclose the terms of membership clearly and conspicuously; and (b) establishing procedures for the administration of such ''negative option'' plans.

Request for Comment

On August 3, 2020, the FTC sought public comment on the information collection requirements associated with the Rule. 85 FR 46628. The Commission received one anonymous comment (#0049–0002), which generally supported the Rule's extension.[2] Pursuant to the OMB regulations, 5 CFR part 1320, that implement the PRA, 44 U.S.C. 3501 *et seq.,* the FTC is providing this second opportunity for public comment while seeking OMB approval to renew the pre-existing clearance for the Rule.

Your comment—including your name and your state—will be placed on the public record of this proceeding. Because your comment will be made

[1] The Commission recently published an Advance Notice of Proposed Rulemaking seeking comments on the need for amendments to the current Rule. 84 FR 52393 (Oct. 2, 2019). The present PRA Notice is not part of that proceeding and merely seeks comment on the existing burden estimates for the current Rule, which applies only to ''prenotification'' negative option plans.

[2] This comment was filed under the wrong public docket number and is available at *https://www.regulations.gov/document?D=FTC-2020-0049-0002.*

public, you are solely responsible for making sure that your comment does not include any sensitive personal information, such as anyone's Social Security number; date of birth; driver's license number or other state identification number, or foreign country equivalent; passport number; financial account number; or credit or debit card number. You are also solely responsible for making sure that your comment does not include any sensitive health information, such as medical records or other individually identifiable health information. In addition, your comment should not include any ''trade secret or any commercial or financial information which . . . is privileged or confidential''—as provided by Section 6(f) of the FTC Act, 15 U.S.C. 46(f), and FTC Rule 4.10(a)(2), 16 CFR 4.10(a)(2)—including in particular competitively sensitive information such as costs, sales statistics, inventories, formulas, patterns, devices, manufacturing processes, or customer names.

Josephine Liu,

Assistant General Counsel for Legal Counsel.

[FR Doc. 2020–24325 Filed 11–2–20; 8:45 am]

BILLING CODE 6750–01–P

GENERAL SERVICES ADMINISTRATION

[OMB Control No. 3090–0315; Docket No. 2020–0001; Sequence No. 6]

Information Collection; Ombudsman Inquiry/Request Instrument

AGENCY: Office of Acquisition Policy, Office of the Procurement Ombudsman (OPO), General Services Administration (GSA).

ACTION: Notice and request for comments.

SUMMARY: Under the provisions of the Paperwork Reduction Act, the Regulatory Secretariat Division will be submitting to the OMB a request to review and approve a renewal to an existing information collection requirement regarding OMB Control No: 3090–0315; Ombudsman Inquiry/Request Instrument.

DATES: Submit comments on or before December 3, 2020.

ADDRESSES: Written comments and recommendations for this information collection should be sent within 30 days of publication of this notice to *www.reginfo.gov/public/do/PRAMain.* Find this particular information collection by selecting ''Currently under Review—Open for Public Comments'' or by using the search function.

FOR FURTHER INFORMATION CONTACT: Maria Swaby, GSA Procurement Ombudsman & Industry Liaison, at telephone 202–208–0291, or *maria.swaby@gsa.gov.*

SUPPLEMENTARY INFORMATION:

A. Purpose

OPO wants to place an online intake Instrument on the GSA Ombudsman's web page for receiving inquiries from vendors who are currently doing business with, or interested in doing business with GSA. The inquiries will be collected by the GSA Ombudsman and routed to the appropriate office for resolution and/or implementation in the case of recommendations for process or program improvements. Reporting of the data collected will help highlight thematic issues that vendors encounter with GSA acquisition programs, processes or policies, and identify areas where training is needed. The information collected will also assist in identifying and analyzing patterns and trends to help improve efficiencies and lead to improvements in current practices.

B. Annual Reporting Burden

Maximum Potential Respondents: 118.

Responses per Respondent: 1.

Total Maximum Potential Annual Responses: 118.

Hours per Response: .25.

Total Burden Hours: 29.5.

C. Public Comments

A 60-day notice published in the **Federal Register** at 85 FR 52134 on August 24, 2020. No comments were received.

Obtaining Copies: Requesters may obtain a copy of the information collection documents from the GSA Regulatory Secretariat Division by calling 202–501–4755 or emailing *GSARegSec@gsa.gov.* Please cite OMB Control No. 3090–0315, Ombudsman Inquiry/Request Instrument, in all correspondence.

Beth Anne Killoran,

Deputy Chief Information Officer.

[FR Doc. 2020–24352 Filed 11–2–20; 8:45 am]

BILLING CODE 6820–61–P

DEPARTMENT OF HEALTH AND HUMAN SERVICES

Administration for Children and Families

Proposed Information Collection Activity; Formative Data Collections for ACF Research and Evaluation (OMB #0970–0356)

AGENCY: Office of Planning, Research, and Evaluation, Administration for Children and Families, HHS.

ACTION: Request for public comment.

SUMMARY: The Administration for Children and Families (ACF) proposes to extend data collection under the existing overarching generic clearance for Formative Data Collections for ACF Research and Evaluation (OMB #0970–0356). There are no changes to the proposed types of information collection or uses of data, but the request does include an increase to the estimated number of respondents and, therefore, the overall burden estimate.

DATES: *Comments due within 60 days of publication.* In compliance with the requirements of Section 3506(c)(2)(A) of the Paperwork Reduction Act of 1995, ACF is soliciting public comment on the specific aspects of the information collection described above.

ADDRESSES: Copies of the proposed collection of information can be obtained and comments may be forwarded by emailing *OPREinfocollection@acf.hhs.gov.* Alternatively, copies can also be obtained by writing to the Administration for Children and Families, Office of Planning, Research and Evaluation, 330 C Street SW, Washington, DC 20201, Attn: OPRE Reports Clearance Officer. All requests, emailed or written, should be identified by the title of the information collection.

SUPPLEMENTARY INFORMATION:

Description: ACF programs promote the economic and social well-being of families, children, individuals, and communities. OPRE studies ACF programs, and the populations they serve, through rigorous research and evaluation projects. These include evaluations of existing programs, evaluations of innovative approaches to helping low-income children and families, research syntheses, and descriptive and exploratory studies. OPRE's research serves to provide further understanding of current programs and service populations, explore options for program improvement, and assess alternative policy and program designs. OPRE anticipates undertaking a variety of new

research projects related to welfare, employment and self-sufficiency, Head Start, child care, healthy marriage and responsible fatherhood, family and youth services, home visiting, child welfare, and other areas of interest to ACF. Under this generic clearance, ACF engages in a variety of formative data collections with researchers, practitioners, technical assistance providers, service providers, and potential participants throughout the field to fulfill the following goals: (1) Inform the development of ACF research, (2) maintain a research agenda that is rigorous and relevant, (3) ensure that research products are as current as possible, and (4) inform the provision of technical assistance. ACF uses a variety of techniques including semi-structured discussions, focus groups, surveys, and telephone or in-person interviews, in order to reach these goals.

Following standard OMB requirements, OPRE will submit a change request for each individual data collection activity under this generic clearance. Each request will include the individual instrument(s), a justification specific to the individual information collection, and any supplementary documents. OMB should review requests within 10 days of submission.

Respondents: Example respondents include: Key stakeholder groups involved in ACF projects and programs, state or local government officials, service providers, participants in ACF programs or similar comparison groups, experts in fields pertaining to ACF research and programs, or others involved in conducting ACF research or evaluation projects.

ANNUAL BURDEN ESTIMATES

Instrument	Estimated total number of respondents	Number of responses per respondent	Average burden hours per response	Annual burden hours
Semi-Structured Discussions and Focus Groups	3000	1	2	6000
Interviews	1500	1	1	1500
Questionnaires/Surveys	1125	1	.5	563

Estimated total annual burden hours: 8,063.

Comments: The Department specifically requests comments on (a) whether the proposed collection of information is necessary for the proper performance of the functions of the agency, including whether the information shall have practical utility; (b) the accuracy of the agency's estimate of the burden of the proposed collection of information; (c) the quality, utility, and clarity of the information to be collected; and (d) ways to minimize the burden of the collection of information on respondents, including through the use of automated collection techniques or other forms of information technology. Consideration will be given to comments and suggestions submitted within 60 days of this publication.

Authority: Social Security Act, Sec. 1110 [42 U.S.C. 1310].

Mary B. Jones,

ACF/OPRE Certifying Officer.

[FR Doc. 2020–24266 Filed 11–2–20; 8:45 am]

BILLING CODE 4184–79–P

DEPARTMENT OF HEALTH AND HUMAN SERVICES

Health Resources and Services Administration

Agency Information Collection Activities: Submission to OMB for Review and Approval; Public Comment Request; Information Collection Request Title: Federal Tort Claims Act (FTCA) Program Deeming Sponsorship Application for Free Clinics, OMB No. 0915–0293—Revision

AGENCY: Health Resources and Services Administration (HRSA), Department of Health and Human Services.

ACTION: Notice.

SUMMARY: In compliance with of the Paperwork Reduction Act of 1995, HRSA has submitted an Information Collection Request (ICR) to the Office of Management and Budget (OMB) for review and approval. Comments submitted during the first public review of this ICR will be provided to OMB. OMB will accept further comments from the public during the review and approval period. OMB may act on HRSA's ICR only after the 30 day comment period for this notice has closed.

DATES: Comments on this ICR must be received no later than December 3, 2020.

ADDRESSES: Written comments and recommendations for the proposed information collection should be sent within 30 days of publication of this notice to *www.reginfo.gov/public/do/PRAMain.* Find this particular information collection by selecting ''Currently under Review—Open for Public Comments'' or by using the search function.

FOR FURTHER INFORMATION CONTACT: To request a copy of the clearance requests submitted to OMB for review, email Lisa Wright-Solomon, the HRSA Information Collection Clearance Officer at *paperwork@hrsa.gov* or call (301) 443–1984.

SUPPLEMENTARY INFORMATION: When submitting comments or requesting information, please include the information request collection title for reference.

Information Collection Request Title: Federal Tort Claims Act Program Deeming Sponsorship Application for Free Clinics, OMB No. 0915–0293—Revision

Abstract: Section 224(o) of the Public Health Service (PHS) Act (42 U.S.C. 233(o)), as amended, authorizes the ''deeming'' of certain individuals as PHS employees for the purposes of receiving liability protections, including Federal Tort Claims Act (FTCA) coverage, for the performance of medical, surgical, dental or related functions within the scope of deemed employment. Section 224(o) extends eligibility for deemed PHS employee status to free clinic health professionals including employees, officers, board members, contractors, and volunteers at qualifying free clinics.

The Free Clinics FTCA Program is administered by HRSA's Bureau of Primary Health Care. Sponsoring free

clinics seeking FTCA coverage for their employees, officers, board members, contractors, and volunteers must submit deeming applications in the specified form and manner on behalf of named individuals for review and approval, resulting in a ''deeming determination'' that includes associated FTCA coverage for these individuals.

HRSA is proposing several changes to the FTCA Program Deeming Applications for Free Clinics, to be used for Free Clinic deeming sponsorship applications for Calendar Year 2021 and thereafter, to improve question clarity and clarify required documentation. Specifically, the Application includes the following proposed changes:

• Updated application language: Specifically, throughout the application, alternate terminology was utilized to provide greater clarity and specificity. These changes were based on stakeholder feedback and information received from the HRSA Health Center Program Support. These changes are not substantive in nature.

• Added Service Type and clarifications regarding professional designation: Specifically, section VI of the application was updated to include service type which will allow HRSA to verify whether an individual is performing clinical or non-clinical services. In addition to the inclusion of service type, a note was added to request that free clinics include the professional designation for each individual.

• Deleted remark in section IX: It has been determined that the information requested in this section, which related to offsite events and particularized determinations is no longer necessary to evaluate eligibility for deeming.

The FTCA Program has a web based application system, the Electronic Handbooks. These electronic application forms decrease the time and effort required to complete the older, paper-based OMB approved FTCA application forms. The application includes: Contact Information, Site Information, Information on the Sponsoring Free Clinic Eligibility, Information on the Credentialing and Privileging Systems, Information on the Risk Management Systems, Information on the Free Clinic Volunteer Health Care Professionals, Board Members, Officers, Employees, and Individual Contractors and Patient Visit Data.

A 60-day notice was published in the **Federal Register** on August 6, 2020, vol. 85, No. 152; pp. 47803–04. HRSA received one public comment regarding FTCA coverage of Urban Indian Organizations, which is outside of the scope of this ICR.

Need and Proposed Use of the Information: Deeming applications must address certain criteria required by law in order for the Secretary to deem an individual sponsored by a qualifying free clinic as a PHS employee for purposes of liability protections, including FTCA coverage. This determination cannot be made without the collection of this information. Specifically, the deeming sponsorship application form seeks information verifying that the free clinic meets the criteria to sponsor a deeming application and that the individual being sponsored is eligible to be deemed as a PHS employee. The FTCA application form for free clinics has been updated to improve clarity and thereby improve applicants' and deemed individuals' compliance with applicable requirements.

Likely Respondents: Respondents include free clinics seeking deemed PHS employee status on behalf of their sponsored individuals for purposes of liability protections including FTCA coverage.

Burden Statement: Burden in this context means the time expended by persons to generate, maintain, retain, disclose or provide the information requested. This includes the time needed to review instructions; to develop, acquire, install, and utilize technology and systems for the purpose of collecting, validating, and verifying information, processing and maintaining information, and disclosing and providing information; to train personnel and to be able to respond to a collection of information; to search data sources; to complete and review the collection of information; and to transmit or otherwise disclose the information. The total annual burden hours estimated for this ICR are summarized in the table below.

TOTAL ESTIMATED ANNUALIZED BURDEN—HOURS

Form name	Number of respondents	Number of responses per respondent	Total responses	Average burden per response (in hours)	Total burden hours
FTCA Program Deeming Application for Free Clinics	374	3	1,122	2	2,244
Total	374		1,122		2,244

HRSA specifically requests comments on (1) the necessity and utility of the proposed information collection for the proper performance of the agency's functions, (2) the accuracy of the estimated burden, (3) ways to enhance the quality, utility, and clarity of the information to be collected, and (4) the use of automated collection techniques or other forms of information technology to minimize the information collection burden.

Maria G. Button,

Director, Division of the Executive Secretariat.

[FR Doc. 2020–24337 Filed 11–2–20; 8:45 am]

BILLING CODE 4165–15–P

DEPARTMENT OF HEALTH AND HUMAN SERVICES

Health Resources and Services Administration

National Vaccine Injury Compensation Program: Revised Amount of the Average Cost of a Health Insurance Policy

AGENCY: Health Resources and Services Administration (HRSA), Department of Health and Human Services (HHS).

ACTION: Notice.

SUMMARY: HRSA is publishing an updated monetary amount of the average cost of a health insurance policy as it relates to the National Vaccine Injury Compensation Program (VICP).

FOR FURTHER INFORMATION CONTACT: Tamara Overby, Acting Director, Division of Injury Compensation Programs, Healthcare Systems Bureau, HRSA, HHS by mail at 5600 Fishers Lane, 08N186B, Rockville, Maryland 20857; or call (301) 443–9350.

SUPPLEMENTARY INFORMATION: Section 100.2 of VICP's implementing regulation (42 CFR part 100) states that the revised amount of an average cost of a health insurance policy, as determined by the Secretary of HHS (the Secretary), is effective upon its delivery by the

Secretary to the United States Court of Federal Claims (the Court), and will be published periodically in a notice in the **Federal Register**. The Secretary delegated this responsibility to the HRSA Administrator. This figure is calculated using the most recent Medical Expenditure Panel Survey-Insurance Component data available as the baseline for the average monthly cost of a health insurance policy. This baseline is adjusted by the annual percentage increase/decrease obtained from the most recent annual Kaiser Family Foundation Employer Health Benefits Survey or other authoritative source that may be more accurate or appropriate.

In 2020, Medical Expenditure Panel Survey-Insurance Component, available at *www.meps.ahrq.gov,* published the annual 2019 average total single premium per enrolled employee at private-sector establishments that provide health insurance. The figure published was $6,972. This figure is divided by 12 to determine the cost per month of $581. The $581 figure is increased or decreased by the percentage change reported by the most recent Kaiser Family Foundation Employer Health Benefits Survey, available at *www.kff.org.* The increase from 2019 to 2020 was 4.0 percent. By adding this percentage increase, the calculated average monthly cost of a health insurance policy for a 12-month period is $604.24.

Therefore, the Secretary announces that the revised average cost of a health insurance policy under the VICP is $604.24 per month. In accordance with § 100.2, the revised amount was effective upon its delivery by the Secretary to the Court. Such notice was delivered to the Court on October 29, 2020.

Thomas J. Engels,

Administrator.

[FR Doc. 2020–24314 Filed 11–2–20; 8:45 am]

BILLING CODE 4165–15–P

DEPARTMENT OF HEALTH AND HUMAN SERVICES

Review and Revision of the Screening Framework Guidance for Providers of Synthetic Double-Stranded DNA

AGENCY: Office of the Secretary, Assistant Secretary for Preparedness and Response (ASPR), Department of Health and Human Services.

ACTION: Notice.

SUMMARY: Synthetic biology is a multidisciplinary field of research that involves the design, modification, and creation of biological systems and holds broad promise to advance both basic and applied research in areas ranging from materials science to molecular medicine. However, synthetic nucleic acids and associated technologies may also pose risks if misused. To reduce the risk that individuals with ill intent may exploit the application of nucleic acid synthesis technology to obtain genetic material derived from or encoding Select Agents and Toxins and, as applicable, agents on the Export Administration Regulations' (EAR's) Commerce Control List (CCL), the U.S. Government issued guidance in 2010 providing a framework for screening synthetic double-stranded DNA (dsDNA). This document, the *Screening Framework Guidance for Providers of Synthetic Double-Stranded DNA* (Guidance), sets forth recommended baseline standards for the gene and genome synthesis industry and other providers of synthetic dsDNA products, regarding the screening of orders, so they are filled in compliance with U.S. regulations prohibiting the possession, use, and transfer of specific pathogens and biological toxins. The other goals of the Guidance are to encourage best practices in addressing biosecurity concerns associated with the potential misuse of these products to inflict harm or bypass existing regulatory controls and to minimize any negative impacts on the conduct of research and business operations. Rapid and continued advances in nucleic acid synthesis technologies and synthetic biology applications necessitate periodic reevaluation of associated risks and mitigation measures. We invite public comments on whether and, if so, how the Guidance should be modified to address new and emerging challenges posed by advances in this area.

Please submit all comments related to this request for information (RFI) through the web form on the Screening Framework Guidance for Providers of Synthetic Double-Stranded DNA website at *https://www.phe.gov/*syndna/*update2020.*

DATES: Responses to this RFI must be received no later than 12 p.m. (ET) on the revised submission deadline of January 4, 2021. This notice was originally published with an earlier date. Please note that the close date for comments has been changed from the original notice.

FOR FURTHER INFORMATION CONTACT: Dr. C. Matthew Sharkey; Division of Policy; Office of Strategy, Policy, Planning, and Requirements; Office of the Assistant Secretary for Preparedness and Response; U.S. Department of Health and Human Services; phone: 202–401–1448; email: *Matthew.Sharkey@hhs.gov;* website: *https://www.phe.gov/*syndna/*update2020.*

SUPPLEMENTARY INFORMATION:

Disclaimer and Important Notes: The U.S. Government is seeking feedback from life sciences stakeholders, including from the commercial, health care, academic, and non-profit sectors; federal and state, local, tribal, and territorial (SLTT) law enforcement organizations; SLTT governments; and others, including the members of the public. The focus of this RFI is to help inform whether updates or modifications of the Guidance are needed and, if so, what updates or modifications are desired. The U.S. Government will review and consider all responses to this RFI. The U.S. Government will not provide reimbursement for costs incurred in responding to this RFI. Respondents are advised that the U.S. Government is under no obligation to acknowledge receipt of the information received or to provide feedback to respondents with respect to any information submitted under this RFI. Responses to this RFI do not bind the U.S. Government to any further actions related to this topic. Respondents are welcome to answer all or any subset of the questions and are strongly advised to not include any information in their responses that might be considered attributable, business sensitive, proprietary, or otherwise confidential, as comments may be made available for public review.

Categories and Questions

Scope of the Guidance

Nucleic acid synthesis technologies are fundamental for biomedical research and allow for the generation and modification of some viruses, bacteria, and toxins. Such technologies serve as tools to advance important research to understand such agents better as well as in developing medical countermeasures. Additionally, dsDNA synthesis could pose biosecurity risks, including enabling individuals with ill intent or who are not authorized to possess Select Agents and Toxins (or, for international orders, items listed on the CCL) to obtain them using materials ordered from providers of synthetic dsDNA.

The Guidance sets forth recommended baseline standards for the gene and genome synthesis industry and other providers of synthetic dsDNA, regarding the screening of orders, to ensure they are filled in compliance with Select Agent Regulations (SAR)

and CCL and to encourage best practices in addressing biosecurity concerns associated with the potential misuse of their products to bypass existing regulatory controls. The U.S. Government—after receiving feedback from the scientific community and synthetic biology industry stakeholders—developed the Guidance to align with providers' existing protocols, to be implemented without unnecessary cost, and to be globally extensible for U.S.-based providers operating abroad and for international providers. The Guidance recommends synthetic dsDNA providers perform customer screening, sequence screening, and follow-up screening to verify the legitimacy of the customer, the principal user, and the end-use of the sequence. The following questions address how the Guidance could be modified to identify nucleic acid sequences that pose biosecurity risks for follow-up screening, if deemed necessary. Please include explanations, examples, or potential benefits and drawbacks in your responses.

Should the focus of the Guidance extend beyond the Select Agents and Toxins list and CCL?

Are there potential benefits and/or downsides to screening for sequences not on the Select Agents and Toxins list or CCL?

Should the scope of the Guidance be broadened beyond synthetic dsDNA? If so, how? Should the scope of the Guidance be broadened to other synthetic nucleic acids? If so, what synthetic sequences? Or, should the scope of the Guidance be broadened beyond providers of synthetic dsDNA? If so, to whom? Why?

Should the scope of the Guidance be narrowed, either in terms of types of sequences screened or the audience of the Guidance? Why or why not?

Sequence Screening

The Guidance currently suggests follow-up screening for synthetic dsDNA orders, with the greatest percent identity (Best Match), over each 200 nucleic acid segment, and the corresponding amino acid sequence, to regulated Select Agents and Toxins and, as applicable, the CCL. The following questions seek to understand whether the Guidance should be modified from a technical perspective.

Should the Guidance be further clarified or otherwise updated to identify embedded ''sequences of concern'' within larger-length orders? If so, how?

Are there approaches other than the Best Match, using the Basic Local Alignment Search Tool (BLAST) or other local sequence alignment tools, to check against the National Institutes of Health's (HIH's) GenBank database that should be considered? What are the benefits and/or downsides of those approaches compared with the current Guidance?

Are there other approaches (*e.g.,* predictive bioinformatics tools) that could be utilized to identify sequences of concern for follow-up screening?

Are there other considerations that would be appropriate (*e.g.,* batch size) in decisions about whether to conduct follow-up screening, such as oligonucleotide orders in quantities that indicate they are intended for use in assembling a pathogen genome directly?

Biosecurity Measures

The Guidance recommends that dsDNA orders be screened for sequences derived from or encoding Select Agents and Toxins and, for international customers, dsDNA derived from or encoding items on the CCL. The U.S. Government recognizes that there may be concerns that synthetic dsDNA sequences not unique to Select Agents and Toxins or CCL agents may also pose a biosecurity risk. The U.S. Government also recognizes that many providers have already instituted measures to address these potential concerns. The ongoing development of best practices in this area is commendable and encouraged, particularly considering continued advances in DNA sequencing and synthesis technologies and the accelerated rate of sequence submissions to public databases such as the NIH's GenBank. However, owing to the complexity of determining if pathogenicity and other material properties pose a biosecurity risk and to the fact that many such agents are not currently encompassed by regulations in the United States, generating a comprehensive list of such agents to screen against was not feasible when the Guidance was released in 2010. The following questions pertain to how the biosecurity risks arising from the potential misuse of genetic sequences should be assessed.

Is maintenance and use of broader list-based approach(es) now feasible? If so, how might this approach be realized? If not, what are major roadblocks to implementing this approach? Since the release of the original Guidance, have providers or other entities developed customized database approaches, or approaches that evaluate the biological risk associated with non-Select Agent and Toxin sequences or, for international orders, sequences not associated with items on the CCL? If so, how effective have they been, and have there been any negative impacts?

Are there other security or screening approaches (*e.g.,* risk assessments, virulence factor databases) that would be able to determine potential biosecurity risks arising from the use of nucleic acid synthesis technologies? What are the potential opportunities and limitations of these approaches?

Given that nucleic acid sequences not encompassed by SAR and the CCL may pose biosecurity risks, are there alternative approaches to the screening mechanism that could be established? If such approaches have been established, how effective have they been, and have there been any negative impacts?

Customer Screening

The Guidance suggests that if either customer screening or sequence screening raises any concerns, providers should perform follow-up screening of the customer. The purpose of follow-up screening is to verify the legitimacy of the customer and the principal user, to confirm that the customer and principal user placing an order are acting within their authority, and to verify the legitimacy of the end-use. If follow-up screening does not resolve concerns about the order or there is reason to believe a customer may intentionally or inadvertently violate U.S. laws, providers are encouraged to contact designated entities within the U.S. Government for further information and assistance. The following questions address how the Guidance could be modified to improve follow-up screening of customers.

What, if any, mechanisms for pre-screening customers or categories of customers for certain types of orders, if any, should be considered to make secondary screening for providers of synthetic oligonucleotides more efficient?

Are there additional types of end-user screenings or follow-up mechanisms that should be considered to mitigate the risk that synthetic genetic materials containing sequences assessed to pose biosecurity risks are transferred to a second party who does not have a legitimate purpose to receive them?

Minimizing Burden of the Guidance

The Guidance sets forth recommended baseline standards for the gene and genome synthesis industry and other providers of synthetic dsDNA products. Although voluntary, it places upon dsDNA providers the responsibility for screening sequences, customers, and end-users. In considering updates to the Guidance, the U.S. Government seeks approaches

that minimize undue negative impacts of customer and sequence screening on the synthetic biology industry and the life sciences research community. The following questions are meant to elicit insights into how these responsibilities may have impacted synthetic dsDNA providers and customers.

Does implementation of the current Guidance unduly burden providers of synthetic dsDNA? If so, how could it be modified without compromising effectiveness?

Have customers experienced delays in receiving orders of synthetic dsDNA due to screening?

Have there been any undue burdens, financial, logistical, or otherwise since implementing the Guidance? If so, has it increased, especially as other costs associated with dsDNA synthesis have decreased?

What challenges, if any, do the recommendation to retain records of customer orders, ''hits,'' and/or follow-up screening for at least eight years present for your organization?

How might potential changes to the Guidance to expand the scope or methodologies affect the burden for providers of dsDNA and customers (including delays to scientific progress caused by extended review)?

Is your organization concerned about legal liability challenges between customers and providers?

Technologies Subject to the Guidance

The Guidance currently addresses only synthetic dsDNA and it was developed based on providers' existing protocols and technologies at that time. The life sciences field is rapidly advancing through improved bioinformatics tools, new technologies, and new discoveries. The following questions pertain to how the Guidance could be modified to address the new biosecurity risks that may be posed by advances in the life sciences.

Do other oligonucleotide types and other synthetic biological technologies, currently not covered by the Guidance, pose similar biosecurity risks as synthetic dsDNA (*e.g.,* Ribonucleic Acid [RNA], single-stranded DNA, or other oligonucleotides)?

Are there other appropriate security measures that should be established to address the potential threats arising from the use of nucleic acid synthesis, given new and emerging technologies in the life sciences?

Are there new biosecurity risks posed by the introduction of new generations of benchtop DNA synthesizers capable of synthesizing and assembling dsDNA, RNA, single-stranded DNA, or oligonucleotides in-house that should be addressed by the Guidance?

As synthetic biology becomes an increasingly digital enterprise with large databases, digital tools, robotics, and artificial intelligence, what new risks are presented to providers and consumers of synthetic oligonucleotides?

If new risks are evident, how should these risks be addressed, keeping in mind the potential impacts on providers, customers, and scientific progress?

Additional Considerations

The U.S. Government is committed to mitigating the potential biosecurity risks associated with synthetic DNA and its applications, while minimizing undue impacts on providers, customers, and scientific progress.

Are there other mechanisms that the U.S. Government should consider for screening sequences, customers, or end-uses that may help mitigate the biosecurity risks associated with synthetic nucleotides and their applications, while minimizing undue impacts on providers, customers, and scientific progress?

Authority: Section 301 of the Public Health Service Act, 42 U.S.C. 241; Section 605 of the Pandemic and All-Hazards Preparedness and Advancing Innovation Act of 2019, Pub. L. 116–22.

Dated: October 28, 2020.

Robert P. Kadlec,

Assistant Secretary for Preparedness and Response.

[FR Doc. 2020–24265 Filed 11–2–20; 8:45 am]

BILLING CODE 4150–37–P

DEPARTMENT OF HEALTH AND HUMAN SERVICES

National Institutes of Health

Center For Scientific Review; Notice of Closed Meetings

Pursuant to section 10(d) of the Federal Advisory Committee Act, as amended, notice is hereby given of the following meetings.

The meetings will be closed to the public in accordance with the provisions set forth in sections 552b(c)(4) and 552b(c)(6), Title 5 U.S.C., as amended. The grant applications and the discussions could disclose confidential trade secrets or commercial property such as patentable material, and personal information concerning individuals associated with the grant applications, the disclosure of which would constitute a clearly unwarranted invasion of personal privacy.

Name of Committee: Center for Scientific Review Special Emphasis Panel; Member Conflict: Lung Diseases.

Date: November 24–25, 2020.

Time: 9:00 a.m. to 6:00 p.m.

Agenda: To review and evaluate grant applications.

Place: National Institutes of Health, Rockledge II, 6701 Rockledge Drive, Bethesda, MD 20892, (Virtual Meeting).

Contact Person: George M. Barnas, Ph.D., Scientific Review Officer, Center for Scientific Review, National Institutes of Health, 6701 Rockledge Drive, Room 4220, MSC 7818, Bethesda, MD 20892, (301) 435–0696, *barnasg@csr.nih.gov.*

Name of Committee: Center for Scientific Review Special Emphasis Panel, Member Conflict: Vascular Pathobiology.

Date: November 30–December 1, 2020.

Time: 10:00 a.m. to 6:00 p.m.

Agenda: To review and evaluate grant applications.

Place: National Institutes of Health, Rockledge II, 6701 Rockledge Drive, Bethesda, MD 20892, (Virtual Meeting).

Contact Person: Ai-Ping Zou, MD, Ph.D., Scientific Review Officer, Center for Scientific Review, National Institutes of Health, 6701 Rockledge Drive, Room 4118, MSC 7814, Bethesda, MD 20892, (301) 408–9497, *zouai@csr.nih.gov.*

Name of Committee: Center for Scientific Review Special Emphasis Panel, Review of R21 Applications: RFA–OD–19–021.

Date: November 30, 2020.

Time: 2:30 p.m. to 4:30 p.m.

Agenda: To review and evaluate grant applications.

Place: National Institutes of Health, Rockledge II, 6701 Rockledge Drive, Bethesda, MD 20892, (Virtual Meeting).

Contact Person: Atul Sahai, Ph.D., Scientific Review, Officer Center for Scientific Review, National Institutes of Health, 6701 Rockledge Drive, Room 2188, MSC 7818, Bethesda, MD 20892, (301) 435–1198, *sahaia@csr.nih.gov.*

Name of Committee: Center for Scientific Review Special Emphasis Panel, Member Conflict: Cancer Biology.

Date: November 30, 2020.

Time: 12:00 p.m. to 4:00 p.m.

Agenda: To review and evaluate grant applications.

Place: National Institutes of Health, Rockledge II, 6701 Rockledge Drive, Bethesda, MD 20892, (Virtual Meeting).

Contact Person: Rolf Jakobi, Ph.D., Scientific Review, Officer Center for Scientific Review, National Institutes of Health, 6701 Rockledge Drive, Room 6187, MSC 7806, Bethesda, MD 20892, (301) 495–1718, *jakobir@mail.nih.gov.*

(Catalogue of Federal Domestic Assistance Program Nos. 93.306, Comparative Medicine, 93.333, Clinical Research, 93.306, 93.333, 93.337, 93.393–93.396, 93.837–93.844, 93.846–93.878, 93.892, 93.893, National Institutes of Health, HHS)

Dated: October 28, 2020.

Miguelina Perez,

Program Analyst, Office of Federal Advisory Committee Policy.

[FR Doc. 2020–24306 Filed 11–2–20; 8:45 am]

BILLING CODE 4140–01–P

DEPARTMENT OF HEALTH AND HUMAN SERVICES

National Institutes of Health

Center For Scientific Review; Amended Notice of Meeting

Notice is hereby given of a change in the meeting of the Center for Scientific Review Special Emphasis Panel, November 19, 2020, 1 p.m. to November 19, 2020, 5 p.m., National Institutes of Health, 6701 Rockledge Drive, Bethesda, MD 20892 which was published in the **Federal Register** on October 22, 2020, 85 FR 67361.

This notice is being amended to change the panel name from Aspects of Development and Disease in the Cornea to Member Conflict: Neuropsychiatric Disorders. The meeting is closed to the public.

Dated: October 28, 2020.

Ronald J. Livingston, Jr.,

Program Analyst, Office of Federal Advisory Committee Policy.

[FR Doc. 2020–24256 Filed 11–2–20; 8:45 am]

BILLING CODE 4140–01–P

DEPARTMENT OF HEALTH AND HUMAN SERVICES

National Institutes of Health

Center for Scientific Review; Notice of Closed Meetings

Pursuant to section 10(d) of the Federal Advisory Committee Act, as amended, notice is hereby given of the following meetings.

The meetings will be closed to the public in accordance with the provisions set forth in sections 552b(c)(4) and 552b(c)(6), Title 5 U.S.C., as amended. The grant applications and the discussions could disclose confidential trade secrets or commercial property such as patentable material, and personal information concerning individuals associated with the grant applications, the disclosure of which would constitute a clearly unwarranted invasion of personal privacy.

Name of Committee: Center for Scientific Review Special Emphasis Panel; Topics in Instrumentation and Systems Development.

Date: November 19, 2020.

Time: 11:00 a.m. to 12:30 p.m.

Agenda: To review and evaluate grant applications.

Place: National Institutes of Health, Rockledge II, 6701 Rockledge Drive, Bethesda, MD 20892 (Telephone Conference Call).

Contact Person: Kee Forbes, Ph.D., Scientific Review Officer, Center for Scientific Review, National Institutes of Health, 6701 Rockledge Drive, Room 5148, MSC 7806, Bethesda, MD 20892, 301–272–4865, *kee.forbes@nih.gov.*

Name of Committee: Center for Scientific Review Special Emphasis Panel; PAR 19–294: Early-Stage Preclinical Validation of Therapeutic Leads for Diseases of Interest to the NIDDK.

Date: December 1–2, 2020.

Time: 10:00 a.m. to 4:00 p.m.

Agenda: To review and evaluate grant applications.

Place: National Institutes of Health, Rockledge II, 6701 Rockledge Drive, Bethesda, MD 20892 (Virtual Meeting).

Contact Person: Raul Rojas, Ph.D., Scientific Review Officer, Center for Scientific Review, National Institutes of Health, 6701 Rockledge Drive, Room 6185, Bethesda, MD 20892, (301) 451–6319, *rojasr@mail.nih.gov.*

Name of Committee: Center for Scientific Review Special Emphasis Panel; Member Conflict: Sleep, Stress, Olfactory and Spatial Processing.

Date: December 1, 2020.

Time: 12:01 p.m. to 4:30 p.m.

Agenda: To review and evaluate grant applications.

Place: National Institutes of Health, Rockledge II, 6701 Rockledge Drive, Bethesda, MD 20892 (Virtual Meeting).

Contact Person: Janita N. Turchi, Ph.D., Scientific Review Officer, Center for Scientific Review, National Institutes of Health, 6701 Rockledge Drive, Room 5185, Bethesda, MD 20892, (301) 402–4005, *turchij@mail.nih.gov.*

Name of Committee: Center for Scientific Review Special Emphasis Panel; Research Related to Coronavirus Disease 2019 (COVID–19).

Date: December 2, 2020.

Time: 9:00 a.m. to 7:00 p.m.

Agenda: To review and evaluate grant applications.

Place: National Institutes of Health, Rockledge II, 6701 Rockledge Drive, Bethesda, MD 20892 (Virtual Meeting).

Contact Person: Baishali Maskeri, Ph.D., Scientific Review Officer, Center for Scientific Review, National Institutes of Health, 6701 Rockledge Drive, Room 2022, Bethesda, MD 20892, 301–827–2864, *maskerib@mail.nih.gov.*

Name of Committee: Center for Scientific Review Special Emphasis Panel; PAR20–103: Collaborative Program Grant for Multidisciplinary Teams (RM1).

Date: December 2, 2020.

Time: 10:00 a.m. to 5:00 p.m.

Agenda: To review and evaluate grant applications.

Place: National Institutes of Health, Rockledge II, 6701 Rockledge Drive, Bethesda, MD 20892.

Contact Person: William A. Greenberg, Ph.D., Scientific Review Officer, Center for Scientific Review, National Institutes of Health, 6701 Rockledge Drive, Room 4168, MSC 7806, Bethesda, MD 20892, (301) 435–1726, *greenbergwa@csr.nih.gov.*

Name of Committee: Center for Scientific Review Special Emphasis Panel; Pathogenic Eukaryotes.

Date: December 2, 2020.

Time: 10:30 a.m. to 3:00 p.m.

Agenda: To review and evaluate grant applications.

Place: National Institutes of Health, Rockledge II, 6701 Rockledge Drive, Bethesda, MD 20892 (Virtual Meeting).

Contact Person: Tera Bounds, Ph.D., DVM, Scientific Review Officer, Center for Scientific Review, National Institutes of Health, 6701 Rockledge Drive, Room 3198, MSC 7808, Bethesda, MD 20892, (301) 435–2306, *boundst@csr.nih.gov.*

Name of Committee: Center for Scientific Review Special Emphasis Panel; Member Conflict: Neurobiology of Glia.

Date: December 2, 2020.

Time: 1:00 p.m. to 5:00 p.m.

Agenda: To review and evaluate grant applications.

Place: National Institutes of Health, Rockledge II, 6701 Rockledge Drive, Bethesda, MD 20892 (Virtual Meeting).

Contact Person: Peter B. Guthrie, Ph.D., Scientific Review Officer, Center for Scientific Review, National Institutes of Health, 6701 Rockledge Drive, Room 4142, MSC 7850, Bethesda, MD 20892, (301) 435–1239, *guthriep@csr.nih.gov.*

(Catalogue of Federal Domestic Assistance Program Nos. 93.306, Comparative Medicine; 93.333, Clinical Research, 93.306, 93.333, 93.337, 93.393–93.396, 93.837–93.844, 93.846–93.878, 93.892, 93.893, National Institutes of Health, HHS)

Dated: October 29, 2020.

Patricia B. Hansberger,

Supervisory Program Analyst, Office of Federal Advisory Committee Policy.

[FR Doc. 2020–24368 Filed 11–2–20; 8:45 am]

BILLING CODE 4140–01–P

DEPARTMENT OF HEALTH AND HUMAN SERVICES

National Institutes of Health

Center for Scientific Review; Notice of Closed Meetings

Pursuant to section 10(d) of the Federal Advisory Committee Act, as amended, notice is hereby given of the following meetings.

The meetings will be closed to the public in accordance with the provisions set forth in sections 552b(c)(4) and 552b(c)(6), Title 5 U.S.C., as amended. The grant applications and the discussions could disclose confidential trade secrets or commercial property such as patentable material, and personal information concerning

individuals associated with the grant applications, the disclosure of which would constitute a clearly unwarranted invasion of personal privacy.

Name of Committee: Center for Scientific Review Special Emphasis Panel; Immuno-Oncology Research.
Date: December 1–2, 2020.
Time: 9:00 a.m. to 5:00 p.m.
Agenda: To review and evaluate grant applications.
Place: National Institutes of Health, Rockledge II, 6701 Rockledge Drive, Bethesda, MD 20892, (Virtual Meeting).
Contact Person: Mehrdad Mohseni, MD, Scientific Review Officer, Center for Scientific Review, National Institutes of Health, 6701 Rockledge Drive, Room 5211, MSC 7854, Bethesda, MD 20892, 301–435–0484 *mohsenim@csr.nih.gov.*

Name of Committee: Center for Scientific Review Special Emphasis Panel; Small Business: Drug Discovery Involving the Nervous System.
Date: December 1–2, 2020.
Time: 9:00 a.m. to 7:00 p.m.
Agenda: To review and evaluate grant applications.
Place: National Institutes of Health, Rockledge II, 6701 Rockledge Drive, Bethesda, MD 20892, (Virtual Meeting).
Contact Person: Aurea D. De Sousa, Ph.D., Scientific Review Officer, National Institutes of Health, Center for Scientific Review, 6701 Rockledge Drive, Room 5186, Bethesda, MD 20892, 301–827–6829, *aurea.desousa@nih.gov.*

Name of Committee: Center for Scientific Review Special Emphasis Panel; Small Business: Instrumentation, Environmental and Occupational Safety.
Date: December 1–2, 2020.
Time: 9:00 a.m. to 6:00 p.m.
Agenda: To review and evaluate grant applications.
Place: National Institutes of Health, Rockledge II, 6701 Rockledge Drive, Bethesda, MD 20892, (Virtual Meeting).
Contact Person: Marie-Jose Belanger, Ph.D., Scientific Review Officer, Center for Scientific Review, National Institutes of Health, 6701 Rockledge Drive, Rm 6188, MSC 7804, Bethesda, MD 20892, (301) 435–1267, *belangerm@csr.nih.gov.*

Name of Committee: Center for Scientific Review Special Emphasis Panel; Member Conflict: Visual System Biology.
Date: December 1, 2020.
Time: 1:00 p.m. to 4:00 p.m.
Agenda: To review and evaluate grant applications.
Place: National Institutes of Health, Rockledge II, 6701 Rockledge Drive, Bethesda, MD 20892, (Virtual Meeting).
Contact Person: John Burch, Ph.D., Scientific Review Officer, Center for Scientific Review, National Institute of Health, 6701 Rockledge Drive, Room 3213, MSC 7808, Bethesda, MD 20892, 301–408–9519, *burchjb@csr.nih.gov.*

Name of Committee: Center for Scientific Review Special Emphasis Panel; PAR: 18–731 Cancer Biology—Workforce Diversity.
Date: December 1, 2020.
Time: 12:30 p.m. to 4:00 p.m.
Agenda: To review and evaluate grant applications.
Place: National Institutes of Health, Rockledge II, 6701 Rockledge Drive, Bethesda, MD 20892, (Telephone Conference Call).
Contact Person: Juraj Bies, Ph.D., Scientific Review Officer, Center for Scientific Review, National Institutes of Health, 6701 Rockledge Drive, Rm. 4158, MSC 7806, Bethesda, MD 20892, 301–435–1256, *biesj@mail.nih.gov.*

(Catalogue of Federal Domestic Assistance Program Nos. 93.306, Comparative Medicine; 93.333, Clinical Research, 93.306, 93.333, 93.337, 93.393–93.396, 93.837–93.844, 93.846–93.878, 93.892, 93.893, National Institutes of Health, HHS)

Dated: October 28, 2020.

Ronald J. Livingston, Jr.,

Program Analyst, Office of Federal Advisory Committee Policy.

[FR Doc. 2020–24255 Filed 11–2–20; 8:45 am]

BILLING CODE 4140–01–P

DEPARTMENT OF HEALTH AND HUMAN SERVICES

National Institutes of Health

Eunice Kennedy Shriver National Institute Of Child Health & Human Development; Notice of Closed Meetings

Pursuant to section 10(d) of the Federal Advisory Committee Act, as amended, notice is hereby given of the following meetings.

The meetings will be closed to the public in accordance with the provisions set forth in sections 552b(c)(4) and 552b(c)(6), Title 5 U.S.C., as amended. The grant applications and/or contract proposals the discussions could disclose confidential trade secrets or commercial property such as patentable material, and personal information concerning individuals associated with the grant applications, the disclosure of which would constitute a clearly unwarranted invasion of personal privacy.

Name of Committee: National Institute of Child Health and Human Development Special Emphasis Panel ZHD1/Child Health Research Career Development Award (CHRCDA) Program.
Date: November 16, 2020.
Time: 8:00 a.m. to 5:00 p.m.
Agenda: To review and evaluate grant applications.
Place: National Institute of Child Health and Human Development, 6710B Rockledge Drive, Bethesda, MD 20892, (Video-Assisted Meeting).
Contact Person: Kimberly L. Houston, M.D., Scientific Review Officer, Scientific Review Branch, Eunice Kennedy Shriver National Institute of Child Health and Human Development, NIH, 6710B Rockledge Drive, Rm. 2137C, Bethesda, MD 20817, 301–827–4902, *kimberly.houston@nih.gov.*

Name of Committee: National Institute of Child Health and Human Development Special Emphasis Panel Member Conflict.
Date: November 24, 2020.
Time: 8:00 a.m. to 5:00 p.m.
Agenda: To review and evaluate grant applications.
Place: National Institute of Child Health and Human Development, 6710B Rockledge Drive, Bethesda, MD 20892, (Video-Assisted Meeting).
Contact Person: Christiane M. Robbins, Scientific Review Officer, Scientific Review Branch (SRB), DER, Eunice Kennedy Shriver National Institute, of Child Health and Human Development, NIH, DHHS, 6710B Rockledge Drive, Rm 2121A, Bethesda, MD 20817, 301–451–4989, *crobbins@mail.nih.gov.*

(Catalogue of Federal Domestic Assistance Program Nos. 93.865, Research for Mothers and Children, National Institutes of Health, HHS)

Dated: October 28, 2020.

Ronald J. Livingston, Jr.,

Program Analyst, Office of Federal Advisory Committee Policy.

[FR Doc. 2020–24254 Filed 11–2–20; 8:45 am]

BILLING CODE 4140–01–P

DEPARTMENT OF HOMELAND SECURITY

Coast Guard

[Docket No. USCG–2020–0311]

Notice of Availability of Record of Decision for the Final Supplemental Environmental Impact Statement/ Supplemental Overseas Environmental Impact Statement for Mariana Islands Training and Testing

AGENCY: Coast Guard, DHS.

ACTION: Notice of availability.

SUMMARY: The Coast Guard is adopting portions of the Navy's Mariana Islands Training and Testing (MITT) Final 2020 Supplemental Environmental Impact Statement/Supplemental Overseas Environmental Impact Statement (SEIS/SOEIS), dated June 2020. The Coast Guard is doing this in its role as a cooperating agency to the lead agency, which is the Department of the Navy. The Coast Guard is issuing a Record of Decision to implement Alternative 2 to fully meet current and future training requirements.

DATES: The Coast Guard's Record of Decision is dated October 9, 2020.

ADDRESSES: To view the full text of the ROD or the Final SEIS/SOEIS, go to *http://www.regulations.gov,* insert MITT study area or USCG–2020–0311 in the ''Keyword'' box, and then click

''Search.'' Project documents, including the 2020 Final SEIS/SOEIS, are also available on the ''2020 Mariana Islands Training and Testing Final Supplemental EIS/OEIS'' web page at *https://mitt-eis.com/.* The 2015 Final EIS/OEIS can be accessed at *https://mitt-eis.com/* as well at the ''2015 Mariana Islands Training and Testing EIS/OEIS Documents'' web page.

FOR FURTHER INFORMATION CONTACT: For information about this Record of Decision call or email Ms. Maile Norman, Office of Enforcement, U.S. Coast Guard; telephone 1–808–535–3264, email *Maile.C.Norman@uscg.mil.*

SUPPLEMENTARY INFORMATION:

Abbreviations

CFR Code of Federal Regulations
FR Federal Register
MIRC Mariana Islands Range Complex
MITT Mariana Islands Training and Testing
ROD Record of Decision
SEIS Supplemental Environmental Impact Statement
SOEIS Supplemental Overseas Environmental Impact Statement
U.S.C. United States Code

Background and Legal Basis

This Coast Guard Record of Decision (ROD) adopts portions of the 2020 Final Supplemental Environmental Impact Statement/Supplemental Overseas Environmental Impact Statement (SEIS/SOEIS). This is necessary because the Coast Guard plans to continue joint and independent training and testing in the Mariana Islands Training and Testing (MITT) study area with the Navy through at least December 31, 2027. The purpose and need for the Coast Guard action is to allow Coast Guard personnel to qualify and train, jointly with and independent of the Navy, in the effective and safe operational use of Coast Guard vessels, aircraft, and weapons under realistic conditions in the area where they would operate and to ensure our Nation's maritime safety and security.

The Coast Guard has broad, multifaceted authority for management of activities over all waters subject to jurisdiction of the U.S. Coast Guard's law enforcement and national defense mission authority, which is based in 14 U.S.C. 102. This section requires the Coast Guard to:

(1) Enforce federal law in waters of the U.S.;

(2) Maintain maritime surveillance;

(3) Enforce safety regulations; and

(4) ''Maintain a state of readiness to function as a specialized service in the Navy in time of war, including the fulfillment of Maritime Defense Zone command responsibilities.''

The Coast Guard conducts search and rescue missions under authorities in 14 U.S.C. 102, 502, and 701. These missions are achieved in part by conducting training and testing within the MITT study area to develop, sharpen, and maintain tactics, coordination, and personnel readiness.

Discussion

The Navy solicited public comment on the Draft SEIS/SOEIS on February 1, 2019 (84 FR 1119), and extended the public comment period until April 17, 2019 (84 FR 12238). The Navy also scheduled and held public meetings (84 FR 8515). The Navy announced its final SEIS/SOEIS in the **Federal Register** on June 5, 2020.

The MITT SEIS/SOEIS identified and examined the alternatives available to achieve the purposes of the training and testing, and assessed the potential environmental impact of each. Alternatives considered but eliminated were continuing actions at levels identified in the 2015 MITT Final EIS/OEIS and ROD, alternative training and testing locations, reduced training and testing, alternatives including geographic mitigation measures within the study area and simulated training and testing only.

Three alternatives were examined in detail in the SEIS/SOEIS.

(1) *No Action Alternative:* Under the no action alternative, the Navy, Air Force, and Coast Guard would not conduct the proposed training and testing activities in the MITT study area. Other military activities not associated with either Alternatives 1 or 2 would continue to occur. For Farallon de Medinilla, the lease agreement between the U.S. Government and the Commonwealth of the Northern Mariana Islands would remain in place, and the island would continue to be maintained as a Navy range, although strike warfare would no longer continue on the island.

(2) *Alternative 1:* Alternative 1 reflects a representative year of training and testing to account for the typical fluctuation of training cycles, testing programs, and deployment schedules that generally limit the maximum level of training and testing from occurring for the reasonably foreseeable future. Alternative 1 also reflects a level of testing activities to be conducted into the reasonably foreseeable future, with adjustments from the 2015 MITT Final EIS/OEIS that account for changes in the types and tempo (increases or decreases) of testing activities to meet current and future military readiness requirements.

(3) *Alternative 2 (Preferred Alternative):* Alternative 2 includes the same types of training activities as Alternative 1 but also considers additional exercises and associated unit-level activities should unanticipated emergent world events require increased readiness levels. For example, Alternative 2 considers Joint Multi-Strike Group Exercises (*i.e.,* Valiant Shield) occurring annually as compared to every other year under Alternative 1. Alternative 2 reflects the maximum number of training activities that could occur within a given year, and assumes that the maximum number of exercises would occur annually. Alternative 2 entails a level of testing activities to be conducted into the reasonably foreseeable future. Under Alternative 2, types and tempos of testing activities would increase compared to Alternative 1.

Under Alternative 2, the Navy, Air Force, and Coast Guard will be able to meet current and future Navy, Air Force, and Coast Guard training and testing, including the use of aerial and vessel assets conducting anchoring and gunnery training within the MITT study area. These actions will allow joint and independent training and testing for Navy, Air Force, and Coast Guard personnel to establish, maintain, and advance readiness in meeting statutory mission requirements. For Coast Guard, the MITT study area is composed of established sea-based (at-sea) ranges along Guam and the Commonwealth of the Northern Mariana Islands and operating areas and special use airspace in the regions of the Mariana Islands that are part of the Mariana Islands Range Complex (MIRC). The study area also includes a transit corridor that connects the MIRC and the Hawaiian Islands Range Complex. For the Navy and Air Force, the study area is the same as what is described for the Coast Guard but also includes land-based training areas in Guam and the Commonwealth of the Northern Mariana Islands.

Alternative 2 was selected because it fulfills the purpose and need of the proposed action and, in combination with avoidance and mitigation measures, results in a minimum of environmental impacts.

This notice is issued under authority of the National Environmental Policy Act of 1969 (Section 102(2)(c)), as implemented by the Council on Environmental Quality regulations (40 CFR 1500–1508), U.S. Coast Guard Environmental Planning Policy (Coast Guard Commandant Instruction 5090.1), law enforcement and national defense mission authority at 14 U.S.C. 102, and search and rescue authority at 14 U.S.C. 102, 502, and 701.

Dated: October 22, 2020.

Craig M. O'Brien,

Captain, 14th District, U.S. Coast Guard, Chief of Response.

[FR Doc. 2020–24357 Filed 11–2–20; 8:45 am]

BILLING CODE 9110–04–P

DEPARTMENT OF HOMELAND SECURITY

Federal Emergency Management Agency

[Docket ID FEMA–2020–0002; Internal Agency Docket No. FEMA–B–2066]

Changes in Flood Hazard Determinations

AGENCY: Federal Emergency Management Agency, DHS.

ACTION: Notice.

SUMMARY: This notice lists communities where the addition or modification of Base Flood Elevations (BFEs), base flood depths, Special Flood Hazard Area (SFHA) boundaries or zone designations, or the regulatory floodway (hereinafter referred to as flood hazard determinations), as shown on the Flood Insurance Rate Maps (FIRMs), and where applicable, in the supporting Flood Insurance Study (FIS) reports, prepared by the Federal Emergency Management Agency (FEMA) for each community, is appropriate because of new scientific or technical data. The FIRM, and where applicable, portions of the FIS report, have been revised to reflect these flood hazard determinations through issuance of a Letter of Map Revision (LOMR), in accordance with Federal Regulations. The LOMR will be used by insurance agents and others to calculate appropriate flood insurance premium rates for new buildings and the contents of those buildings. For rating purposes, the currently effective community number is shown in the table below and must be used for all new policies and renewals.

DATES: These flood hazard determinations will be finalized on the dates listed in the table below and revise the FIRM panels and FIS report in effect prior to this determination for the listed communities.

From the date of the second publication of notification of these changes in a newspaper of local circulation, any person has 90 days in which to request through the community that the Deputy Associate Administrator for Insurance and Mitigation reconsider the changes. The flood hazard determination information may be changed during the 90-day period.

ADDRESSES: The affected communities are listed in the table below. Revised flood hazard information for each community is available for inspection at both the online location and the respective community map repository address listed in the table below. Additionally, the current effective FIRM and FIS report for each community are accessible online through the FEMA Map Service Center at *https://msc.fema.gov* for comparison.

Submit comments and/or appeals to the Chief Executive Officer of the community as listed in the table below.

FOR FURTHER INFORMATION CONTACT: Rick Sacbibit, Chief, Engineering Services Branch, Federal Insurance and Mitigation Administration, FEMA, 400 C Street SW, Washington, DC 20472, (202) 646–7659, or (email) *patrick.sacbibit@fema.dhs.gov;* or visit the FEMA Mapping and Insurance eXchange (FMIX) online at *https://www.floodmaps.fema.gov/fhm/fmx_main.html.*

SUPPLEMENTARY INFORMATION: The specific flood hazard determinations are not described for each community in this notice. However, the online location and local community map repository address where the flood hazard determination information is available for inspection is provided.

Any request for reconsideration of flood hazard determinations must be submitted to the Chief Executive Officer of the community as listed in the table below.

The modifications are made pursuant to section 201 of the Flood Disaster Protection Act of 1973, 42 U.S.C. 4105, and are in accordance with the National Flood Insurance Act of 1968, 42 U.S.C. 4001 *et seq.,* and with 44 CFR part 65.

The FIRM and FIS report are the basis of the floodplain management measures that the community is required either to adopt or to show evidence of having in effect in order to qualify or remain qualified for participation in the National Flood Insurance Program (NFIP).

These flood hazard determinations, together with the floodplain management criteria required by 44 CFR 60.3, are the minimum that are required. They should not be construed to mean that the community must change any existing ordinances that are more stringent in their floodplain management requirements. The community may at any time enact stricter requirements of its own or pursuant to policies established by other Federal, State, or regional entities. The flood hazard determinations are in accordance with 44 CFR 65.4.

The affected communities are listed in the following table. Flood hazard determination information for each community is available for inspection at both the online location and the respective community map repository address listed in the table below. Additionally, the current effective FIRM and FIS report for each community are accessible online through the FEMA Map Service Center at *https://msc.fema.gov* for comparison.

(Catalog of Federal Domestic Assistance No. 97.022, ''Flood Insurance.'')

Michael M. Grimm,

Assistant Administrator for Risk Management, Department of Homeland Security, Federal Emergency Management Agency.

State and county	Location and case No.	Chief executive officer of community	Community map repository	Online location of letter of map revision	Date of modification	Community No.
Arizona:						
Maricopa	City of Glendale (20–09–0467P).	The Honorable Jerry P. Weiers, Mayor, City of Glendale, 5850 West Glendale Avenue, Suite 451, Glendale, AZ 85301.	City Hall, 5850 West Glendale Avenue, Glendale, AZ 85301.	*https://msc.fema.gov/portal/advanceSearch.*	Dec. 18, 2020	040045
Maricopa	City of Peoria (20–09–0467P).	The Honorable Cathy Carlat, Mayor, City of Peoria, 8401 West Monroe Street, Peoria, AZ 85345.	City Hall, 8401 West Monroe Street, Peoria, AZ 85345.	*https://msc.fema.gov/portal/advanceSearch.*	Dec. 18, 2020	040050

State and county	Location and case No.	Chief executive officer of community	Community map repository	Online location of letter of map revision	Date of modification	Community No.
Maricopa	City of Peoria (20–09–0555P).	The Honorable Cathy Carlat, Mayor, City of Peoria, 8401 West Monroe Street, Peoria, AZ 85345.	City Hall, 8401 West Monroe Street, Peoria, AZ 85345.	*https://msc.fema.gov/portal/advanceSearch.*	Dec. 28, 2020	040050
Maricopa	City of Peoria (20–09–0943P).	The Honorable Cathy Carlat, Mayor, City of Peoria, 8401 West Monroe Street, Peoria, AZ 85345.	City Hall, 8401 West Monroe Street, Peoria, AZ 85345.	*https://msc.fema.gov/portal/advanceSearch.*	Jan. 22, 2021	040050
Maricopa	City of Phoenix (20–09–0698P).	The Honorable Kate Gallego, Mayor, City of Phoenix, City Hall, 200 West Washington Street, Phoenix, AZ 85003.	Street Transportation Department, 200 West Washington Street, 5th Floor, Phoenix, AZ 85003.	*https://msc.fema.gov/portal/advanceSearch.*	Jan. 4, 2021	040051
Maricopa	City of Scottsdale (20–09–0698P).	The Honorable W.J. ''Jim'' Lane, Mayor, City of Scottsdale, City Hall, 3939 North Drinkwater Boulevard, Scottsdale, AZ 85251.	Planning Records, 7447 East Indian School Road, Suite 100, Scottsdale, AZ 85251.	*https://msc.fema.gov/portal/advanceSearch.*	Jan. 4, 2021	045012
California:						
Kern	City of Tehachapi (20–09–0624P).	The Honorable Susan Wiggins, Mayor, City of Tehachapi, 115 South Robinson Street, Tehachapi, CA 93561.	City Hall, 115 South Robinson Street, Tehachapi, CA 93561.	*https://msc.fema.gov/portal/advanceSearch.*	Dec. 17, 2020	060084
Kern	Unincorporated Areas of Kern County (20–09–0624P).	The Honorable Leticia Perez, Chair, Board of Supervisors, Kern County, 1115 Truxtun Avenue, 5th Floor, Bakersfield, CA 93301.	Kern County Planning Department, 2700 M Street, Suite 100, Bakersfield, CA 93301.	*https://msc.fema.gov/portal/advanceSearch.*	Dec. 17, 2020	060075
Los Angeles	Unincorporated Areas of Los Angeles County (20–09–0667P).	The Honorable Kathryn Barger, Chairman, Board of Supervisors, Los Angeles County, 500 West Temple Street, Room 869, Los Angeles, CA 90012.	Los Angeles County Public Works Headquarters, Watershed Management Division, 900 South Fremont Avenue, Alhambra, CA 91803.	*https://msc.fema.gov/portal/advanceSearch.*	Jan. 20, 2021	065043
Florida:						
Duval	City of Jacksonville (19–04–2830P).	The Honorable Lenny Curry, Mayor, City of Jacksonville, 117 West Duval Street, Suite 400, Jacksonville, FL 32202.	Edward Ball Building Development Services, Room 2100, 214 North Hogan Street, Jacksonville, FL 32202.	*https://msc.fema.gov/portal/advanceSearch.*	Jan. 11, 2021	120077
Orange	City of Orlando (20–04–0603P).	The Honorable Buddy Dyer, Mayor, City of Orlando, P.O. Box 4990, Orlando, FL 32801.	City Hall, Permitting Services, 400 South Orange Avenue, 1st Floor, Orlando, FL 32801.	*https://msc.fema.gov/portal/advanceSearch.*	Jan. 7, 2021	120186
Orange	Unincorporated Areas of Orange County (20–04–0603P).	The Honorable Jerry L. Demings, Mayor, Orange County, 201 South Rosalind Avenue, 5th Floor, Orlando, FL 32801.	Orange County Stormwater Management Division, 4200 South John Young Parkway, Orlando, FL 32839.	*https://msc.fema.gov/portal/advanceSearch.*	Jan. 7, 2021	120179
St. Johns	Unincorporated Areas of St. Johns County (19–04–6644P).	The Honorable Jeb S. Smith, Chair, St. Johns County, Board of County Commissioners, 500 San Sebastian View, St. Augustine, FL 32084.	St. Johns County Permit Center, 4040 Lewis Speedway, St. Augustine, FL 32084.	*https://msc.fema.gov/portal/advanceSearch.*	Jan. 15, 2021	125147
Illinois: Ogle	City of Rochelle (18–05–6017P).	The Honorable John Bearrows, Mayor, City of Rochelle, 420 North 6th Street, Rochelle, IL 61068.	City Hall, 420 North 6th Street, Rochelle, IL 61068.	*https://msc.fema.gov/portal/advanceSearch.*	Dec. 31, 2020	170532
Indiana: Marion	City of Indianapolis (20–05–1025P).	The Honorable Joe Hogsett, Mayor, City of Indianapolis, 2501 City-County Building, 200 East Washington Street, Indianapolis, IN 46204.	City Hall, 1200 Madison Avenue, Suite 100, Indianapolis, IN 46225.	*https://msc.fema.gov/portal/advanceSearch.*	Jan. 8, 2021	180159
Michigan: Washtenaw.	City of Ann Arbor (20–05–2798P).	The Honorable Christopher Taylor, Mayor, City of Ann Arbor, City Hall, 301 East Huron Street, 3rd Floor, Ann Arbor, MI 48104.	City Hall, 301 East Huron Street, 3rd Floor, Ann Arbor, MI 48104.	*https://msc.fema.gov/portal/advanceSearch.*	Jan. 15, 2021	260213
Ohio:						

State and county	Location and case No.	Chief executive officer of community	Community map repository	Online location of letter of map revision	Date of modification	Community No.
Lorain	City of Elyria (19–05–3354P).	The Honorable Frank Whitfield, MBA, Mayor, City of Elyria, City Hall, 131 Court Street, Suite 301, Elyria, OH 44035.	Lorain County Administration Building, 226 Middle Avenue, Elyria, OH 44035.	*https://msc.fema.gov/portal/advanceSearch.*	Jan. 22, 2021	390350
Lorain	Unincorporated Areas of Lorain County (19–05–3354P).	Ms. Lori Kokoski, President, Board of Commissioners, Lorain County, 226 Middle Avenue, Elyria, OH 44035.	Lorain County Administration Building, 226 Middle Avenue, Elyria, OH 44035.	*https://msc.fema.gov/portal/advanceSearch.*	Jan. 22, 2021	390346
Medina	City of Brunswick (20–05–0885P).	The Honorable Ron Falconi, Mayor, City of Brunswick, 4095 Center Road, Brunswick, OH 44212.	City Engineer, 4095 Center Road, Brunswick, OH 44212.	*https://msc.fema.gov/portal/advanceSearch.*	Jan. 6, 2021	390380
Oregon:						
Multnomah	City of Troutdale (20–10–0496P).	The Honorable Casey Ryan, Mayor, City of Troutdale, 219 East Historic Columbia River Hwy., Troutdale, OR 97060.	City Hall, 219 East Historic Columbia River Hwy., Troutdale, OR 97060.	*https://msc.fema.gov/portal/advanceSearch.*	Jan. 11, 2021	410184
Multnomah	Unincorporated Areas of Multnomah County (20–10–0496P).	Ms. Deborah Kafoury, Chair, Multnomah County, 501 Southeast Hawthorne Boulevard, Suite 600, Portland, OR 97214.	Multnomah County Office of Land Use and Planning, 1600 Southeast 190th Avenue, Portland, OR 97233.	*https://msc.fema.gov/portal/advanceSearch.*	Jan. 11, 2021	410179
Utah: Morgan	Unincorporated Areas Morgan County (20–08–0579P).	Mr. Roland Haslam, Chair, Morgan County Board, 48 West Young Street, Morgan, UT 84050.	Morgan County Community Development Department, 48 West Young Street, Morgan, UT 84050.	*https://msc.fema.gov/portal/advanceSearch.*	Jan. 20, 2021	490092

[FR Doc. 2020–24294 Filed 11–2–20; 8:45 am]

BILLING CODE 9110–12–P

DEPARTMENT OF HOMELAND SECURITY

Federal Emergency Management Agency

[Docket ID FEMA–2020–0002; Internal Agency Docket No. FEMA–B–2065]

Proposed Flood Hazard Determinations

AGENCY: Federal Emergency Management Agency, DHS.

ACTION: Notice.

SUMMARY: Comments are requested on proposed flood hazard determinations, which may include additions or modifications of any Base Flood Elevation (BFE), base flood depth, Special Flood Hazard Area (SFHA) boundary or zone designation, or regulatory floodway on the Flood Insurance Rate Maps (FIRMs), and where applicable, in the supporting Flood Insurance Study (FIS) reports for the communities listed in the table below. The purpose of this notice is to seek general information and comment regarding the preliminary FIRM, and where applicable, the FIS report that the Federal Emergency Management Agency (FEMA) has provided to the affected communities. The FIRM and FIS report are the basis of the floodplain management measures that the community is required either to adopt or to show evidence of having in effect in order to qualify or remain qualified for participation in the National Flood Insurance Program (NFIP). In addition, the FIRM and FIS report, once effective, will be used by insurance agents and others to calculate appropriate flood insurance premium rates for new buildings and the contents of those buildings.

DATES: Comments are to be submitted on or before February 1, 2021.

ADDRESSES: The Preliminary FIRM, and where applicable, the FIS report for each community are available for inspection at both the online location *https://www.fema.gov/preliminaryfloodhazarddata* and the respective Community Map Repository address listed in the tables below. Additionally, the current effective FIRM and FIS report for each community are accessible online through the FEMA Map Service Center at *https://msc.fema.gov* for comparison.

You may submit comments, identified by Docket No. FEMA–B–2065, to Rick Sacbibit, Chief, Engineering Services Branch, Federal Insurance and Mitigation Administration, FEMA, 400 C Street SW, Washington, DC 20472, (202) 646–7659, or (email) *patrick.sacbibit@fema.dhs.gov.*

FOR FURTHER INFORMATION CONTACT: Rick Sacbibit, Chief, Engineering Services Branch, Federal Insurance and Mitigation Administration, FEMA, 400 C Street SW, Washington, DC 20472, (202) 646–7659, or (email) *patrick.sacbibit@fema.dhs.gov;* or visit the FEMA Mapping and Insurance eXchange (FMIX) online at *https://www.floodmaps.fema.gov/fhm/fmx_main.html.*

SUPPLEMENTARY INFORMATION: FEMA proposes to make flood hazard determinations for each community listed below, in accordance with section 110 of the Flood Disaster Protection Act of 1973, 42 U.S.C. 4104, and 44 CFR 67.4(a).

These proposed flood hazard determinations, together with the floodplain management criteria required by 44 CFR 60.3, are the minimum that are required. They should not be construed to mean that the community must change any existing ordinances that are more stringent in their floodplain management requirements. The community may at any time enact stricter requirements of its own or pursuant to policies established by other Federal, State, or regional entities. These flood hazard determinations are used to meet the floodplain management requirements of the NFIP and are used to calculate the appropriate flood insurance premium

rates for new buildings built after the FIRM and FIS report become effective.

The communities affected by the flood hazard determinations are provided in the tables below. Any request for reconsideration of the revised flood hazard information shown on the Preliminary FIRM and FIS report that satisfies the data requirements outlined in 44 CFR 67.6(b) is considered an appeal. Comments unrelated to the flood hazard determinations also will be considered before the FIRM and FIS report become effective.

Use of a Scientific Resolution Panel (SRP) is available to communities in support of the appeal resolution process. SRPs are independent panels of experts in hydrology, hydraulics, and other pertinent sciences established to review conflicting scientific and technical data and provide recommendations for resolution. Use of the SRP only may be exercised after FEMA and local communities have been engaged in a collaborative consultation process for at least 60 days without a mutually acceptable resolution of an appeal. Additional information regarding the SRP process can be found online at *https://www.floodsrp.org/pdfs/srp_overview.pdf.*

The watersheds and/or communities affected are listed in the tables below. The Preliminary FIRM, and where applicable, FIS report for each community are available for inspection at both the online location *https://www.fema.gov/preliminaryfloodhazarddata* and the respective Community Map Repository address listed in the tables. For communities with multiple ongoing Preliminary studies, the studies can be identified by the unique project number and Preliminary FIRM date listed in the tables. Additionally, the current effective FIRM and FIS report for each community are accessible online through the FEMA Map Service Center at *https://msc.fema.gov* for comparison.

(Catalog of Federal Domestic Assistance No. 97.022, ''Flood Insurance.'')

Michael M. Grimm,

Assistant Administrator for Risk Management, Department of Homeland Security, Federal Emergency Management Agency.

Community	Community map repository address
Berrien County, Michigan (All Jurisdictions) **Project: 13–05–4209S Preliminary Date: December 10, 2019**	
Charter Township of Benton	Benton Township Office, 1725 Territorial Road, Benton Harbor, MI 49022.
Charter Township of Lake	Lake Township Hall, 3220 Shawnee Road, Bridgman, MI 49106.
Charter Township of Lincoln	Lincoln Township Hall, 2055 West John Beers Road, Stevensville, MI 49127.
Charter Township of St. Joseph	Township Hall, 3000 Washington Avenue, St. Joseph, MI 49085.
City of Benton Harbor	City Hall, 200 East Wall Street, Benton Harbor, MI 49022.
City of Bridgman	City Hall, 9765 Maple Street, Bridgman, MI 49106.
City of New Buffalo	City Hall, 224 West Buffalo Street, New Buffalo, MI 49117.
City of St. Joseph	City Hall, 700 Broad Street, St. Joseph, MI 49085.
Township of Chikaming	Chikaming Township Center, 13535 Red Arrow Highway, Harbert, MI 49115.
Township of Hagar	Hagar Township Hall, 3900 Riverside Road, Riverside, MI 49084.
Township of New Buffalo	Township Office, 17425 Red Arrow Highway, New Buffalo, MI 49117.
Township of Royalton	Royalton Township Hall, 980 Miners Road, St. Joseph, MI 49085.
Village of Grand Beach	Village Hall, 48200 Perkins Boulevard, Grand Beach, MI 49117.
Village of Michiana	Village Hall, 4000 Cherokee Drive, Michiana, MI 49117.
Village of Shoreham	Shoreham Village Hall, 2120 Brown School Road, St. Joseph, MI 49085.
Village of Stevensville	Village Hall, 5768 St. Joseph Avenue, Stevensville, MI 49127.

[FR Doc. 2020–24295 Filed 11–2–20; 8:45 am]

BILLING CODE 9111–23–P

DEPARTMENT OF HOMELAND SECURITY

Federal Emergency Management Agency

[Docket ID FEMA–2020–0001]

Notice of Adjustment of Disaster Grant Amounts

AGENCY: Federal Emergency Management Agency, DHS.

ACTION: Notice.

SUMMARY: FEMA gives notice of an adjustment to the threshold for Small Project subgrants made to state, tribal, and local governments and private nonprofit facilities for disasters declared on or after October 1, 2020.

DATES: This adjustment applies to major disasters and emergencies declared on or after October 1, 2020.

FOR FURTHER INFORMATION CONTACT: Tod Wells, Recovery Directorate, Federal Emergency Management Agency, 500 C Street SW, Washington, DC 20472, (202) 646–3834.

SUPPLEMENTARY INFORMATION: The Robert T. Stafford Disaster Relief and Emergency Assistance Act, 42 U.S.C. 5121–5207, as amended by the Sandy Recovery Improvement Act, Public Law 113–2, provides that FEMA will annually adjust the threshold for assistance provided under section 422, Simplified Procedures, relating to the Public Assistance program, to reflect changes in the Consumer Price Index for All Urban Consumers published by the Department of Labor.

FEMA gives notice that $132,800 is the threshold for any Small Project subgrant made to state, tribal, and local governments or to the owner or operator of an eligible private nonprofit facility under section 422 of the Stafford Act for all major disasters or emergencies declared on or after October 1, 2020.

FEMA bases the adjustment on an increase in the Consumer Price Index for All Urban Consumers of 1.3 percent for the 12-month period that ended in August 2020. This is based on information released by the Bureau of Labor Statistics at the U.S. Department of Labor on September 11, 2020.

(Catalog of Federal Domestic Assistance No. 97.036, Disaster Grants—Public Assistance (Presidentially Declared Disasters).

Pete Gaynor,

Administrator, Federal Emergency Management Agency.

[FR Doc. 2020–24236 Filed 11–2–20; 8:45 am]

BILLING CODE 9111–23–P

DEPARTMENT OF HOUSING AND URBAN DEVELOPMENT

[Docket No. FR–7024–N–44]

30-Day Notice of Proposed Information Collection: HUD Conditional Commitment/Direct Endorsement Statement of Appraised Value; OMB Control Number: 2502–0494

AGENCY: Office of the Chief Information Officer, HUD.

ACTION: Notice.

SUMMARY: HUD has submitted the proposed information collection requirement described below to the Office of Management and Budget (OMB) for review, in accordance with the Paperwork Reduction Act. The purpose of this notice is to allow for an additional 30 days of public comment.

DATES: *Comments Due Date:* December 3, 2020.

ADDRESSES: Interested persons are invited to submit comments regarding this proposal. Written comments and recommendations for the proposed information collection should be sent within 30 days of publication of this notice to *www.reginfo.gov/public/do/Start Printed Page 15501PRAMain.* Find this particular information collection by selecting ''Currently under 30-day Review—Open for Public Comments'' or by using the search function.

FOR FURTHER INFORMATION CONTACT: Colette Pollard, Reports Management Officer, QDAM, Department of Housing and Urban Development, 451 7th Street SW, Washington, DC 20410; email Colette Pollard at *Colette.Pollard@hud.gov* or telephone 202–402–3400. Persons with hearing or speech impairments may access this number through TTY by calling the toll-free Federal Relay Service at (800) 877–8339. This is not a toll-free number. Copies of available documents submitted to OMB may be obtained from Ms. Pollard.

SUPPLEMENTARY INFORMATION: This notice informs the public that HUD has submitted to OMB a request for approval of the information collection described in Section A. The **Federal Register** notice that solicited public comment on the information collection for a period of 60 days was published on June 1, 2020 at 85 FR 33191.

A. Overview of Information Collection

Title of Information Collection: HUD Conditional Commitment/Direct Endorsement Statement of Appraised Value.

OMB Control Number, if applicable: 2502–0494.

Type of Request: Extension of currently approved collection.

Form Number: HUD 92800.5B.

Description of the need for the information and proposed use: Lenders must provide loan applicants a completed copy of Form HUD–92800.5B at or before loan closing. Form HUD–92800.5B serves as the mortgagee's conditional commitment/direct endorsement statement of appraised value of Federal Housing Administration (FHA) mortgage insurance on the property. The form provides a section for the statement of the property's appraised value and other required FHA disclosures to the borrower, including specific conditions that must be met before HUD can endorse a mortgage for FHA insurance. HUD uses the information to determine the eligibility of a property for mortgage insurance.

Respondents: Mortgagees.

Estimated Number of Respondents: 1,483.

Estimated Number of Responses: 741,500.

Frequency of Response: 500.

Average Hours per Response: 0.12.

Total Estimated Burdens: 88,980.

B. Solicitation of Public Comment

This notice is soliciting comments from members of the public and affected parties concerning the collection of information described in Section A on the following:

(1) Whether the proposed collection of information is necessary for the proper performance of the functions of the agency, including whether the information will have practical utility;

(2) The accuracy of the agency's estimate of the burden of the proposed collection of information;

(3) Ways to enhance the quality, utility, and clarity of the information to be collected; and

(4) Ways to minimize the burden of the collection of information on those who are to respond; including through the use of appropriate automated collection techniques or other forms of information technology, *e.g.,* permitting electronic submission of responses.

(5) ways to minimize the burden of the collection of information on those who are to respond, including the use of automated collection techniques or other forms of information technology.

HUD encourages interested parties to submit comment in response to these questions.

C. Authority

Section 3507 of the Paperwork Reduction Act (44 U.S.C. 3507).

Colette Pollard,

Department Reports Management Officer, Office of the Chief Information Officer.

[FR Doc. 2020–24253 Filed 11–2–20; 8:45 am]

BILLING CODE 4210–67–P

DEPARTMENT OF HOUSING AND URBAN DEVELOPMENT

[Docket No. FR–7024–N–45]

30-Day Notice of Proposed Information Collection: Public Housing Agency (PHA) Lease and Grievance Requirements; OMB Control Number (2577–0006)

AGENCY: Office of the Chief Information Officer, HUD.

ACTION: Notice.

SUMMARY: HUD has submitted the proposed information collection requirement described below to the Office of Management and Budget (OMB) for review, in accordance with the Paperwork Reduction Act. The purpose of this notice is to allow for an additional 30 days of public comment.

DATES: *Comments Due Date:* December 3, 2020.

ADDRESSES: Interested persons are invited to submit comments regarding this proposal. Written comments and recommendations for the proposed information collection should be sent within 30 days of publication of this notice to *www.reginfo.gov/public/do/Start* Printed Page 15501PRAMain. Find this particular information collection by selecting ''Currently under 30-day Review—Open for Public Comments'' or by using the search function.

FOR FURTHER INFORMATION CONTACT: Colette Pollard, Reports Management Officer, QDAM, Department of Housing and Urban Development, 451 7th Street SW, Washington, DC 20410; email Colette Pollard at *Colette.Pollard@hud.gov* or telephone 202–402–3400. Persons with hearing or speech impairments may access this number through TTY by calling the toll-free Federal Relay Service at (800) 877–8339. This is not a toll-free number. Copies of available documents submitted to OMB may be obtained from Ms. Pollard.

SUPPLEMENTARY INFORMATION: This notice informs the public that HUD has

submitted to OMB a request for approval of the information collection described in Section A. The **Federal Register** notice that solicited public comment on the information collection for a period of 60 days was published on July 21, 2020 at 85 FR 44194.

A. Overview of Information Collection

Title of Information Collection: Public Housing Agency (PHA) Lease and Grievance Requirements.

OMB Approval Number: 2577–0006.

Type of Request: Reinstatement, with change, of a previously approved collection for which approval has expired.

Form Number: N/A.

Description of the need for the information and proposed use: The Public Housing lease and grievance procedures are a recordkeeping requirement on the part of Public Housing agencies (PHAs) as they are required to enter into and maintain lease agreements for each tenant who occupies a Public Housing unit. Also, both PHAs and tenants are required to follow the protocols set forth in the grievance procedures stated in their respective leases for both an informal and formal grievance hearing. This information collection is a reinstatement, with change, of the previous approved collection which has expired. The change is due to an update to the burden and cost estimate. Specifically, this is attributable to fewer number of tenants in public housing covered by these lease and grievance procedures.

Respondents (*i.e.,* affected public): Public Housing Authority (PHA) Households.

Estimated Number of Respondents: 821,741.

Estimated Number of Responses: 1,150,437.

Frequency of Response: 1.4.

Average Hours per Response: .25.

Total Estimated Burdens: 287,609 hours.

B. Solicitation of Public Comment

This notice is soliciting comments from members of the public and affected parties concerning the collection of information described in Section A on the following:

(1) Whether the proposed collection of information is necessary for the proper performance of the functions of the agency, including whether the information will have practical utility;

(2) The accuracy of the agency's estimate of the burden of the proposed collection of information;

(3) Ways to enhance the quality, utility, and clarity of the information to be collected; and

(4) Ways to minimize the burden of the collection of information on those who are to respond; including through the use of appropriate automated collection techniques or other forms of information technology, *e.g.,* permitting electronic submission of responses.

(5) ways to minimize the burden of the collection of information on those who are to respond, including the use of automated collection techniques or other forms of information technology.

HUD encourages interested parties to submit comment in response to these questions.

Authority: Section 3507 of the Paperwork Reduction Act of 1995, 44 U.S.C. Chapter 35 as amended.

Colette Pollard,

Department Reports Management Officer, Officer of the Chief Information Officer.

[FR Doc. 2020–24257 Filed 11–2–20; 8:45 am]

BILLING CODE 4210–67–P

DEPARTMENT OF THE INTERIOR

Fish and Wildlife Service

[FWS–HQ–FAC–2020–N134; FXFR13360900000–FF09F14000–189]

Aquatic Nuisance Species Task Force Meeting

AGENCY: Fish and Wildlife Service, Interior.

ACTION: Notice of teleconference/web meeting.

SUMMARY: The U.S. Fish and Wildlife Service gives notice of a teleconference/web meeting of the Aquatic Nuisance Species (ANS) Task Force, in accordance with the Federal Advisory Committee Act.

DATES:

Teleconference/web meeting: The ANS Task Force will meet Tuesday, Wednesday, and Thursday, December 8–10, 2020, from 12 p.m. to 4 p.m. each day (Eastern Time).

Registration: Registration is required. The deadline for registration in December 7, 2020.

ADDRESSES: The meeting will be held via teleconference and broadcast over the internet. To register and receive the web address and telephone number for participation, contact the Executive Secretary (see **FOR FURTHER INFORMATION CONTACT**) or visit the ANS Task Force website at *https://anstaskforce.gov.*

FOR FURTHER INFORMATION CONTACT: Susan Pasko, Executive Secretary, ANS Task Force, by telephone at (703) 358–2466, or by email at *Susan_Pasko@fws.gov.* If you use a telecommunications device for the deaf (TDD), please call the Federal Relay Service at (800) 877–8339.

SUPPLEMENTARY INFORMATION: The ANS Task Force was established by the Nonindigenous Aquatic Nuisance Prevention and Control Act of 1990 and is composed of Federal and ex-officio members. The ANS Task Force's purpose is to develop and implement a program for U.S. waters to prevent introduction and dispersal of aquatic invasive species; to monitor, control, and study such species; and to disseminate related information.

The meeting agenda will include: updates on new species occurrences in the United States; updates from interagency invasive species organizations; presentations on horizon scanning and risk assessment as tools for invasive species management; presentations on ballast water and Asian carp management programs; updates on priority outputs to advance the goals identified in the ANS Task Force Strategic Plan for 2020–2025; responses to recommendations from the ANS Task Force regional panels; and opportunities for public comment. The final agenda and other related meeting information will be posted on the ANS Task Force website, *https://anstaskforce.gov.*

Public Input

If you wish to listen to the webinar by telephone, listen and view through the internet, provide oral public comment by phone, or provide a written comment for the ANS Task Force to consider, contact the ANS Task Force Executive Secretary (see **FOR FURTHER INFORMATION CONTACT**). Written comments should be received no later than Monday, December 7, 2020, to be considered by the Task Force during the meeting.

Depending on the number of people who want to comment and the time available, the amount of time for individual oral comments may be limited. Interested parties should contact the ANS Task Force Executive Secretary, in writing (see **FOR FURTHER INFORMATION CONTACT**), for placement on the public speaker list for this teleconference. Registered speakers who wish to expand upon their oral statements, or those who had wished to speak but could not be accommodated on the agenda, may submit written statements to the Executive Secretary up to 30 days following the meeting. Requests to address the ANS Task Force during the teleconference will be accommodated in the order the requests are received.

Accommodations

Requests for sign language interpretation services, closed captioning, or other accessibility accommodations should be directed to the ANS Task Force Executive Secretary (see **FOR FURTHER INFORMATION CONTACT**) by close of business Tuesday, December 1, 2020.

Public Disclosure

Before including your address, phone number, email address, or other personal identifying information in your comment, you should be aware that your entire comment—including your personal identifying information—may be made publicly available at any time. While you can ask us in your comment to withhold your personal identifying information from public review, we cannot guarantee that we will be able to do so and that information may be made public at any time.

Authority: 5 U.S.C. Appendix 2.

Dated: October 29, 2020.

David W. Hoskins,

Co-Chair, Aquatic Nuisance Species Task Force.

[FR Doc. 2020–24348 Filed 11–2–20; 8:45 am]

BILLING CODE 4333–15–P

DEPARTMENT OF THE INTERIOR

Bureau of Land Management

[LLOR957000.L1440000.BJ0000.212.HAG 21–0010]

Filing of Plats of Survey: Oregon/Washington

AGENCY: Bureau of Land Management, Interior.

ACTION: Notice.

SUMMARY: The plats of survey of the following described lands are scheduled to be officially filed in the Bureau of Land Management (BLM), Oregon State Office, Portland, Oregon, 30 calendar days from the date of this publication.

DATES: Protests must be received by the BLM prior to the scheduled date of official filing, December 3, 2020.

ADDRESSES: A copy of the plats may be obtained from the Public Room at the Bureau of Land Management, Oregon State Office, 1220 SW 3rd Avenue, Portland, Oregon 97204, upon required payment. The plats may be viewed at this location at no cost.

FOR FURTHER INFORMATION CONTACT: Mary Hartel, (503) 808–6131, Branch of Geographic Sciences, Bureau of Land Management, 1220 SW 3rd Avenue, Portland, Oregon 97204. Persons who use a telecommunications device for the deaf (TDD) may call the Federal Relay Service at 1–800–877–8339 to contact the above individual during normal business hours. The service is available 24 hours a day, 7 days a week, to leave a message or question with the above individual. You will receive a reply during normal business hours.

SUPPLEMENTARY INFORMATION: The plats of survey of the following described lands are scheduled to be officially filed in the Bureau of Land Management, Oregon State Office, Portland, Oregon:

Willamette Meridian, Oregon

T. 38 S., R. 6 E., accepted October 6, 2020
T. 40 S., R. 6 W. accepted October 6, 2020
T. 11 S., R. 43 E., accepted October 22, 2020

Willamette Meridian, Washington

T. 4 N., R. 7 E., accepted October 6, 2020

A person or party who wishes to protest one or more plats of survey identified above must file a written notice of protest with the Chief Cadastral Surveyor for Oregon/Washington, Bureau of Land Management. The notice of protest must identify the plat(s) of survey that the person or party wishes to protest. The notice of protest must be filed before the scheduled date of official filing for the plat(s) of survey being protested. Any notice of protest filed after the scheduled date of official filing will be untimely and will not be considered. A notice of protest is considered filed on the date it is received by the Chief Cadastral Surveyor for Oregon/Washington during regular business hours; if received after regular business hours, a notice of protest will be considered filed the next business day. A written statement of reasons in support of a protest, if not filed with the notice of protest, must be filed with the Chief Cadastral Surveyor for Oregon/Washington within 30 calendar days after the notice of protest is filed. If a notice of protest against a plat of survey is received prior to the scheduled date of official filing, the official filing of the plat of survey identified in the notice of protest will be stayed pending consideration of the protest. A plat of survey will not be officially filed until the next business day following dismissal or resolution of all protests of the plat.

Before including your address, phone number, email address, or other personal identifying information in a notice of protest or statement of reasons, you should be aware that the documents you submit—including your personal identifying information—may be made publicly available in their entirety at any time. While you can ask us to withhold your personal identifying information from public review, we cannot guarantee that we will be able to do so.

Mary J.M. Hartel,

Chief Cadastral Surveyor of Oregon/Washington.

[FR Doc. 2020–24313 Filed 11–2–20; 8:45 am]

BILLING CODE 4310–33–P

DEPARTMENT OF THE INTERIOR

Bureau of Land Management

[XXX.LLID957000. L19100000.BJ0000. LRCSD200570D. 241A00;4500149675]

Filing of Plats of Survey: Idaho

AGENCY: Bureau of Land Management, Interior.

ACTION: Notice of filing of plats of surveys.

SUMMARY: The Bureau of Land Management (BLM) has officially filed the plats of survey of the lands described below in the BLM Idaho State Office, Boise, Idaho, on the dates specified.

Boise Meridian

Idaho

T. 10 S., R. 21 E., Section 24, accepted September 17, 2020
T. 10 S., R. 21 E., Section 25, accepted September 17, 2020

ADDRESSES: A copy of the plats may be obtained from the Public Room at the BLM, Idaho State Office, 1387 S Vinnell Way, Boise, Idaho 83709, upon required payment.

FOR FURTHER INFORMATION CONTACT: Timothy A. Quincy, 208–373–3981, Branch of Cadastral Survey, BLM, 1387 S Vinnell Way, Boise, Idaho 83709–1657. Persons who use a telecommunications device for the deaf (TDD) may call the Federal Relay Service (FRS) at 1–800–877–8339 to contact the above individual during normal business hours. The FRS is available 24 hours a day, 7 days a week, to leave a message or question with Mr. Quincy. You will receive a reply during normal business hours.

SUPPLEMENTARY INFORMATION: The U.S. Bureau of Reclamation requested a survey and supplemental plat to identify certain Federal interest lands in order to facilitate the transfer of title of Reclamation project facilities to qualifying entities under Title VIII of the John D. Dingell, Jr. Conservation, Management, and Recreation Act (Pub. L. 116–9).

A person or party who wishes to protest one or more plats of survey

identified above must file a written notice with the Chief Cadastral Surveyor for Idaho, BLM. The protest must identify the plat(s) of survey that the person or party wishes to protest and contain all reasons and evidence in support of the protest. The BLM considers a protest filed on the date the Chief Cadastral Surveyor for Idaho receives it during regular business hours; if the BLM receives a protest after regular business hours, the BLM considers it to be filed the next business day.

Before including your address, phone number, email address, or other personal identifying information in a protest, you should be aware that the documents you submit, including your personal identifying information, may be made publicly available in their entirety at any time. While you can ask us to withhold your personal identifying information from public review, we cannot guarantee that we will be able to do so.

Timothy A. Quincy,

Chief Cadastral Surveyor for Idaho.

[FR Doc. 2020–24264 Filed 11–2–20; 8:45 am]

BILLING CODE 4310–GG–P

INTERNATIONAL TRADE COMMISSION

[Investigation Nos. 701–TA–432 and 731–TA–1024–1028 (Third Review) and AA1921–188 (Fifth Review)]

Prestressed Concrete Steel Wire Strand From Brazil, India, Japan, Korea, Mexico, and Thailand

Determinations

On the basis of the record [1] developed in the subject five-year reviews, the United States International Trade Commission (''Commission'') determines, pursuant to the Tariff Act of 1930 (''the Act''), that revocation of the countervailing duty order on prestressed concrete steel wire strand (''PC strand'') from India, the antidumping duty orders on PC strand from Brazil, India, Korea, Mexico, and Thailand, as well as the antidumping duty finding on PC strand from Japan, would be likely to lead to continuation or recurrence of material injury to an industry in the United States within a reasonably foreseeable time.

Background

The Commission instituted these reviews on March 2, 2020 (85 FR 12331) and determined on June 5, 2020 that it would conduct expedited reviews (85 FR 61977, October 1, 2020).

The Commission made these determinations pursuant to section 751(c) of the Act (19 U.S.C. 1675(c)). It completed and filed its determinations in these reviews on October 28, 2020. The views of the Commission are contained in USITC Publication 5130 (October 2020), entitled *Prestressed Concrete Steel Wire Strand from Brazil, India, Japan, Korea, Mexico, and Thailand: Investigation Nos. 701–TA–432 and 731–TA–1024–1028 (Third Review) and AA1921–188 (Fifth Review).*

By order of the Commission.

Issued: October 28, 2020.

Lisa Barton,

Secretary to the Commission.

[FR Doc. 2020–24276 Filed 11–2–20; 8:45 am]

BILLING CODE 7020–02–P

[1] The record is defined in § 207.2(f) of the Commission's Rules of Practice and Procedure (19 CFR 207.2(f)).

INTERNATIONAL TRADE COMMISSION

[Investigation Nos. 701–TA–459 and 731–TA–1155 (Second Review)]

Commodity Matchbooks From India

Determinations

On the basis of the record [1] developed in the subject five-year reviews, the United States International Trade Commission (''Commission'') determines, pursuant to the Tariff Act of 1930 (''the Act''), that revocation of the antidumping and countervailing duty orders on commodity matchbooks from India would be likely to lead to continuation or recurrence of material injury to an industry in the United States within a reasonably foreseeable time.

Background

The Commission instituted these reviews on March 2, 2020 (85 FR 12334) and determined on June 5, 2020 that it would conduct expedited reviews (85 FR 61031, September 29, 2020).

The Commission made these determinations pursuant to section 751(c) of the Act (19 U.S.C. 1675(c)). It completed and filed its determinations in these reviews on October 28, 2020. The views of the Commission are contained in USITC Publication 5131 (October 2020), entitled *Commodity Matchbooks from India: Investigation Nos. 701–TA–459 and 731–TA–1155 (Second Review).*

By order of the Commission.

Issued: October 28, 2020.

Lisa Barton,

Secretary to the Commission.

[FR Doc. 2020–24248 Filed 11–2–20; 8:45 am]

BILLING CODE 7020–02–P

[1] The record is defined in § 207.2(f) of the Commission's Rules of Practice and Procedure (19 CFR 207.2(f)).

INTERNATIONAL TRADE COMMISSION

[Investigation Nos. 731–TA–1550–1553 (Preliminary)]

Polyester Textured Yarn From Indonesia, Malaysia, Thailand, and Vietnam; Institution of Anti-Dumping Duty Investigations and Scheduling of Preliminary Phase Investigations

AGENCY: United States International Trade Commission.

ACTION: Notice.

SUMMARY: The Commission hereby gives notice of the institution of investigations and commencement of preliminary phase antidumping duty investigation Nos. 731–TA–1550–1553 (Preliminary) pursuant to the Tariff Act of 1930 (''the Act'') to determine whether there is a reasonable indication that an industry in the United States is materially injured or threatened with material injury, or the establishment of an industry in the United States is materially retarded, by reason of imports of polyester textured yarn from Indonesia, Malaysia, Thailand, and Vietnam, provided for in subheadings 5402.33.3000 and 5402.33.6000 of the Harmonized Tariff Schedule of the United States, that are alleged to be sold in the United States at less than fair value. Unless the Department of Commerce (''Commerce'') extends the time for initiation, the Commission must reach a preliminary determination in antidumping duty investigations in 45 days, or in this case by December 14, 2020. The Commission's views must be transmitted to Commerce within five business days thereafter, or by December 21, 2020.

DATE: October 28, 2020.

FOR FURTHER INFORMATION CONTACT: Andres Andrade (202) 205–2078, Office of Investigations, U.S. International Trade Commission, 500 E Street SW, Washington, DC 20436. Hearing-impaired persons can obtain information on this matter by contacting the Commission's TDD terminal on 202–205–1810. Persons with mobility impairments who will need special assistance in gaining access to the Commission should contact the Office of the Secretary at 202–205–2000. General information concerning the

Commission may also be obtained by accessing its internet server (*https://www.usitc.gov*). The public record for this investigation may be viewed on the Commission's electronic docket (EDIS) at *https://edis.usitc.gov.*

SUPPLEMENTARY INFORMATION:

Background.—These investigations are being instituted, pursuant to section 733(a) of the Tariff Act of 1930 (19 U.S.C. 1673b(a)), in response to a petition filed on October 28, 2020, by Nan Ya Plastics Corp. America, Lake City, South Carolina and Unifi Manufacturing, Inc., Greensboro, North Carolina.

For further information concerning the conduct of these investigations and rules of general application, consult the Commission's Rules of Practice and Procedure, part 201, subparts A and B (19 CFR part 201), and part 207, subparts A and B (19 CFR part 207).

Participation in the investigation and public service list.—Persons (other than petitioners) wishing to participate in the investigations as parties must file an entry of appearance with the Secretary to the Commission, as provided in §§ 201.11 and 207.10 of the Commission's rules, not later than seven days after publication of this notice in the **Federal Register**. Industrial users and (if the merchandise under investigation is sold at the retail level) representative consumer organizations have the right to appear as parties in Commission antidumping duty investigations. The Secretary will prepare a public service list containing the names and addresses of all persons, or their representatives, who are parties to these investigations upon the expiration of the period for filing entries of appearance.

Limited disclosure of business proprietary information (BPI) under an administrative protective order (APO) and BPI service list.—Pursuant to § 207.7(a) of the Commission's rules, the Secretary will make BPI gathered in these investigations available to authorized applicants representing interested parties (as defined in 19 U.S.C. 1677(9)) who are parties to the investigations under the APO issued in the investigations, provided that the application is made not later than seven days after the publication of this notice in the **Federal Register**. A separate service list will be maintained by the Secretary for those parties authorized to receive BPI under the APO.

Conference.— In light of the restrictions on access to the Commission building due to the COVID–19 pandemic, the Commission is conducting the staff conference through video conferencing on Wednesday, November 18, 2020. Requests to appear at the conference should be emailed to *preliminaryconferences@usitc.gov* (DO NOT FILE ON EDIS) on or before Monday, November 16, 2020. Please provide an email address for each conference participant in the email. Information on conference procedures will be provided separately and guidance on joining the video conference will be available on the Commission's Daily Calendar. A nonparty who has testimony that may aid the Commission's deliberations may request permission to participate by submitting a short statement.

Please note the Secretary's Office will accept only electronic filings during this time. Filings must be made through the Commission's Electronic Document Information System (EDIS, *https://edis.usitc.gov*). No in-person paper-based filings or paper copies of any electronic filings will be accepted until further notice.

Written submissions.—As provided in §§ 201.8 and 207.15 of the Commission's rules, any person may submit to the Commission on or before November 23, 2020, a written brief containing information and arguments pertinent to the subject matter of the investigations. Parties should file written testimony in connection with their presentation at the conference. All written submissions must conform with the provisions of § 201.8 of the Commission's rules; any submissions that contain BPI must also conform with the requirements of §§ 201.6, 207.3, and 207.7 of the Commission's rules. The Commission's *Handbook on Filing Procedures,* available on the Commission's website at *https://www.usitc.gov/documents/handbook_on_filing_procedures.pdf,* elaborates upon the Commission's procedures with respect to filings.

In accordance with §§ 201.16(c) and 207.3 of the rules, each document filed by a party to the investigations must be served on all other parties to the investigations (as identified by either the public or BPI service list), and a certificate of service must be timely filed. The Secretary will not accept a document for filing without a certificate of service.

Certification.—Pursuant to § 207.3 of the Commission's rules, any person submitting information to the Commission in connection with these investigations must certify that the information is accurate and complete to the best of the submitter's knowledge. In making the certification, the submitter will acknowledge that any information that it submits to the Commission during these investigations may be disclosed to and used: (i) By the Commission, its employees and Offices, and contract personnel (a) for developing or maintaining the records of these or related investigations or reviews, or (b) in internal investigations, audits, reviews, and evaluations relating to the programs, personnel, and operations of the Commission including under 5 U.S.C. Appendix 3; or (ii) by U.S. government employees and contract personnel, solely for cybersecurity purposes. All contract personnel will sign appropriate nondisclosure agreements.

Authority: These investigations are being conducted under authority of title VII of the Tariff Act of 1930; this notice is published pursuant to § 207.12 of the Commission's rules.

By order of the Commission.

Issued: October 28, 2020.

Lisa Barton,

Secretary to the Commission.

[FR Doc. 2020–24282 Filed 11–2–20; 8:45 am]

BILLING CODE 7020–02–P

DEPARTMENT OF JUSTICE

Notice of Lodging of Proposed Consent Decree Under the Clean Air Act

On October 27, 2020, the Department of Justice lodged a proposed Consent Decree with the United States District Court for the Northern District of Indiana in the lawsuit entitled *United States* v. *City of Gary, Indiana,* Civil Action No. 20–cv–386.

The Complaint seeks civil penalties and injunctive relief for alleged violations of the Clean Air Act (''CAA'') relating to a closed landfill owned and operated by the City of Gary, Indiana (''Gary'' or ''City''). The Complaint alleges that Gary: (1) Violated its permit and the CAA by failing to install a compliant gas collection and control system; (2) failed to properly operate its current system; (3) violated the landfill's surface methane standard; (4) failed to monitor proper operation of its flares; and (5) failed to demonstrate compliance with its gas collection wellhead standards. Under the proposed Consent Decree, Gary would be required to take a number of measures to come into compliance with the CAA. The proposed Consent Decree would require Gary to undertake a suite of improvements to Gary's gas collection and control system, including replacement of the existing flare and system upgrades to actively collect, rather than passively vent, landfill gas.

Gary would also be required to carry out enhanced monitoring and maintenance requirements and follow certain standard operating procedures, attached to the Consent Decree as appendices. The proposed Consent Decree requires Gary to pay a $20,000 civil penalty.

The publication of this notice opens a period for public comment on the Consent Decree. Comments should be addressed to the Assistant Attorney General, Environment and Natural Resources Division, and should refer to *United States* v. *City of Gary, Indiana,* D.J. Ref. No. 90–5–2–1–11714. All comments must be submitted no later than thirty (30) days after the publication date of this notice. Comments may be submitted either by email or by mail:

To submit comments:	*Send them to:*
By email	*pubcomment-ees.enrd@usdoj.gov.*
By mail	Assistant Attorney General, U.S. DOJ—ENRD, P.O. Box 7611, Washington, DC 20044–7611.

During the public comment period, the Consent Decree may be examined and downloaded at this Justice Department website: *https://www.justice.gov/enrd/consent-decrees.* We will provide a paper copy of the Consent Decree upon written request and payment of reproduction costs. Please mail your request and payment to: Consent Decree Library, U.S. DOJ—ENRD, P.O. Box 7611, Washington, DC 20044–7611.

Please enclose a check or money order for $37.75 (25 cents per page reproduction cost) payable to the United States Treasury.

Patricia McKenna,

Assistant Section Chief, Environmental Enforcement Section, Environment and Natural Resources Division.

[FR Doc. 2020–24262 Filed 11–2–20; 8:45 am]

BILLING CODE 4410–15–P

DEPARTMENT OF JUSTICE

Notice of Lodging of Proposed Consent Decree Under the Comprehensive Environmental Response, Compensation, and Liability Act (''CERCLA'')

On October 28, 2020, the Department of Justice filed a complaint and simultaneously lodged a proposed consent decree with the United States District Court for the District of New Jersey in the lawsuit entitled *United States of America* v. *Linde Inc. f/k/a Praxair, Inc.,* Civil Action No. 3:20–cv–15103.

The United States seeks reimbursement of response costs incurred under Section 107(a) of the Comprehensive Environmental Response, Compensation, and Liability Act (''CERCLA'') from Linde Inc. f/k/a Praxair, Inc. (''Settling Defendant'') for response actions at or in connection with the release or threatened release of hazardous substances at the LCP Chemicals, Inc. Superfund Site (the ''Site'') in Linden, New Jersey.

Under the proposed consent decree, Settling Defendant will pay $10 million to the United States to resolve its liability for past and future response costs. Settling Defendant reserves the right to assert claims against the United States under Section 113(f)(3)(B) of CERCLA, 42 U.S.C. 9613(f)(3)(B), arising from the United States' ownership of General Aniline & Film stock and alleged ownership and/or operation of the Site between 1942 and 1965. In return, the United States covenants not to sue or to take administrative action against Settling Defendant pursuant to Sections 106, 107(a), and 107(c)(3) of CERCLA, 42 U.S.C. 9606, 9607(a), and 9607(c)(3), or under Section 7003 of the Resource Conservation and Recovery Act (''RCRA''), 42 U.S.C. 6973. The United States reserves the right to institute separate proceedings against Settling Defendant if previously unknown conditions on or information about the 2.1-acre leasehold of the Site formerly operated by Settling Defendant's predecessors are discovered, and these previously unknown conditions or information indicate that the remedial action is not protective of human health or the environment.

The publication of this notice opens a period for public comment on the proposed consent decree. Comments should be addressed to the Assistant Attorney General, Environment and Natural Resources Division, Environmental Enforcement Section, and should refer to *United States of America* v. *Linde Inc. f/k/a Praxair, Inc.,* D.J. Ref. No. 90–11–3–11134. All comments must be submitted no later than thirty (30) days after the publication date of this notice. Comments may be submitted either by email or by mail:

To submit comments:	*Send them to:*
By email	*pubcomment-ees.enrd@usdoj.gov.*
By mail	Assistant Attorney General, U.S. DOJ—ENRD, P.O. Box 7611, Washington, DC 20044–7611.

Under Section 7003(d) of RCRA, a commenter may request an opportunity for a public meeting in the affected area.

During the public comment period, the consent decree may be examined and downloaded at this Justice Department website: *https://www.justice.gov/enrd/consent-decrees.* We will provide a paper copy of the consent decree upon written request and payment of reproduction costs. Please mail your request and payment to: Consent Decree Library, U.S. DOJ—ENRD, P.O. Box 7611, Washington, DC 20044–7611.

Please enclose a check or money order for $5.75 (25 cents per page reproduction cost) payable to the United States Treasury.

Henry Friedman,

Assistant Section Chief, Environmental Enforcement Section, Environment and Natural Resources Division.

[FR Doc. 2020–24277 Filed 11–2–20; 8:45 am]

BILLING CODE 4410–15–P

DEPARTMENT OF JUSTICE

Notice of Extension of Public Comment Period

On September 29, 2020, the Department of Justice lodged a proposed Consent Decree with the United States District Court for the District of Colorado in the lawsuit entitled *United States and the State of Colorado* v. *TCI Pacific Communications, LLC,* Civil Action No. 1:20–cv–02939–KLM.

The proposed Consent Decree would resolve claims the United States and State of Colorado have brought pursuant to Sections 106, 107(a) and 113(g)(2) of the Comprehensive Environmental Response, Compensation, and Liability Act of 1980, as amended (''CERCLA''), 42 U.S.C. 9606, 9607(a) and 9613(g)(2), against TCI Pacific Communications, LLC (''TCI'') related to Operable Unit 1 (''OU1'') of the Eagle Mine Superfund Site (''Site'') located approximately five miles south of Minturn, Colorado.

The Consent Decree requires TCI to meet water treatment standards for arsenic and other metals at the Site's water treatment plant, collect and treat contaminated groundwater from defined areas, obtain institutional controls to restrict activities that would interfere with the remedy, conduct defined

operation and maintenance activities, and pay future EPA response costs.

The Consent Decree provides TCI and certain related persons covenants not to sue relating to the OU1 under Sections 106 and 107 of CERCLA, 42 U.S.C. 9606 and 9607.

On October 5, 2020, the Department of Justice published notice of the lodging of the proposed consent decree. 85 FR 62766. The notice started a 30-day period for the submission of comments on the proposed consent decree. The Department of Justice has received several requests for an extension of the comment period. In consideration of the requests, notice is hereby given that the Department of Justice has extended the comment period on the proposed consent decree by an additional 30 days, up to and including December 4, 2020. Comments should be addressed to the Assistant Attorney General, Environment and Natural Resources Division, and should refer to *United States and the State of Colorado* v. *TCI Pacific Communications, LLC,* D.J. Ref. No. 90–11–3–1044/7. Comments may be submitted either by email or by mail:

To submit comments:	*Send them to:*
By email	*pubcomment-ees.enrd@usdoj.gov.*
By mail	Assistant Attorney General, U.S. DOJ—ENRD, P.O. Box 7611, Washington, DC 20044–7611.

During the public comment period, the Consent Decree may be examined and downloaded at this Justice Department website: *https://www.justice.gov/enrd/consent-decrees.* We will provide a paper copy of the Consent Decree upon written request and payment of reproduction costs. Please mail your request and payment to: Consent Decree Library, U.S. DOJ—ENRD, P.O. Box 7611, Washington, DC 20044–7611.

Please enclose a check or money order for $27.25 (25 cents per page reproduction cost) payable to the United States Treasury. For a paper copy without the exhibits and signature pages, the cost is $10.75.

Jeffrey Sands,

Assistant Section Chief, Environmental Enforcement Section, Environment and Natural Resources Division.

[FR Doc. 2020–24350 Filed 11–2–20; 8:45 am]

BILLING CODE 4410–15–P

DEPARTMENT OF JUSTICE

[OMB Number 1110–0015]

Agency Information Collection Activities; Proposed eCollection eComments Requested; Extension of a Currently-Approved Collection; Hate Crime Incident Report

AGENCY: Federal Bureau of Investigation (FBI), Department of Justice (DOJ).

ACTION: 60-Day notice and request for comments.

SUMMARY: The DOJ, FBI, Criminal Justice Information Services (CJIS) Division, will be submitting the following information collection request to the Office of Management and Budget for review and approval in accordance with the Paperwork Reduction Act (PRA) of 1995.

DATES: Comments are encouraged and will be accepted for 60 days until January 4, 2021.

FOR FURTHER INFORMATION CONTACT: If you have additional comments especially on the estimated public burden or associated response time, suggestions, or need a copy of the proposed information collection instrument with instructions or additional information, please contact Amy C. Blasher, Crime Statistics Management Unit Chief, FBI, CJIS Division, Module E–3, 1000 Custer Hollow Road, Clarksburg, West Virginia 26306, *acblasher@fbi.gov,* 304–625–4840.

SUPPLEMENTARY INFORMATION: Written comments and suggestions from the public and affected agencies concerning the proposed collection of information are encouraged. Your comments should address one or more of the following four points:

—Evaluate whether the proposed collection of information is necessary for the proper performance of the functions of the FBI, including whether the information will have practical utility;

—Evaluate the accuracy of the agency's estimate of the burden of the proposed collection of information, including the validity of the methodology and assumptions used;

—Evaluate whether, and if so, how the quality, utility, and clarity of the information to be collected can be enhanced; and

—Minimize the burden of the collection of information on those who are to respond, including through the use of appropriate automated, electronic, mechanical, or other technological collection techniques or other forms of information technology (*e.g.,* permitting electronic submission of responses).

Overview of This Information Collection

1. *Type of Information Collection:* Extension of a currently-approved collection.

2. *The Title of the Form/Collection:* Hate Crime Incident Report.

3. *The agency form number, if any, and the applicable component of the Department sponsoring the collection:* The form number is 1–700. The applicable component within the DOJ is the CJIS Division of the FBI.

4. *Affected public who will be asked or required to respond, as well as a brief abstract:*

Primary: Federal, state, local, and tribal law enforcement agencies (LEAs).

Abstract: Under Title 28, United States Code (U.S.C.), Section (§) 534, subsections (a) and (c); the Hate Crime Statistics Act, 34 U.S.C., § 41305, modified by the Matthew Shepard and James Byrd, Jr., Hate Crimes Prevention Act (2009), Public Law, § 4708; and the Uniform Federal Crime Reporting Act of 1988, 34 U.S.C. 41303, this information collection requests hate crime data from LEAs in order for the FBI UCR Program to serve as the national clearinghouse for the collection and dissemination of hate crime data and to publish these statistics annually in *Hate Crime Statistics* and the *National Incident-Based Reporting System.* The hate crime data provide information about the bias motivation, offenses, victims, offenders, and locations of hate crime incidents.

5. *An estimate of the total number of respondents and the amount of time estimated for an average respondent to respond:* The estimated number of LEAs submitting monthly data to the FBI UCR Program is 15,588. Annually, those LEAs submit a total of 187,056 responses (15,588 LEAs × 12 months = 187,056 annual responses). The estimated time it takes for an average respondent to respond is seven minutes. Therefore, the estimated annual public burden associated with the Hate Crime Data Collection is 21,823 hours [(187,056 annual responses × 7 minutes per response)/60 minutes per hour = 21,823.2 total annual hours].

If additional information is required contact: Melody Braswell, Department Clearance Officer, United States Department of Justice, Justice Management Division, Policy and Planning Staff, Two Constitution Square, 145 N Street NE, 3E.405A, Washington, DC 20530.

Dated: October 29, 2020.

Melody Braswell,

Department Clearance Officer for PRA, U.S. Department of Justice.

[FR Doc. 2020–24362 Filed 11–2–20; 8:45 am]

BILLING CODE 4410–02–P

DEPARTMENT OF JUSTICE

[OMB Number 1117–0007]

Agency Information Collection Activities; Proposed eCollection, eComments Requested; Extension Without Change of a Previously Approved Collection Registrant Record of Controlled Substances Destroyed DEA Form 41

AGENCY: Drug Enforcement Administration, Department of Justice.

ACTION: 30-Day notice.

SUMMARY: The Department of Justice (DOJ), Drug Enforcement Administration (DEA), will be submitting the following information collection request to the Office of Management and Budget (OMB) for review and approval in accordance with the Paperwork Reduction Act of 1995.

DATES: Comments are encouraged and will be accepted for 30 days until December 3, 2020.

ADDRESSES: Written comments and recommendations for the proposed information collection should be sent within 30 days of publication of this notice to *www.reginfo.gov/public/do/PRAMain.* Find this particular information collection by selecting ''Currently under 30-day Review—Open for Public Comments'' or by using the search function.

SUPPLEMENTARY INFORMATION: Written comments and suggestions from the public and affected agencies concerning the proposed collection of information are encouraged. Your comments should address one or more of the following four points:

—Evaluate whether the proposed collection of information is necessary for the proper performance of the functions of the agency, including whether the information will have practical utility;

—Evaluate the accuracy of the agency's estimate of the burden of the proposed collection of information, including the validity of the methodology and assumptions used;

—Evaluate whether and if so how the quality, utility, and clarity of the information proposed to be collected can be enhanced; and

—Minimize the burden of the collection of information on those who are to respond, including through the use of appropriate automated, electronic, mechanical, or other forms of information technology, *e.g.,* permitting electronic submission of responses.

Overview of This Information Collection

1. *Type of Information Collection:* Extension of a currently approved collection.

2. *Title of the Form/Collection:* Registrant Record of Controlled Substances Destroyed.

3. *The agency form number, if any, and the applicable component of the Department sponsoring the collection:* DEA Form 41. The applicable component within the Department of Justice is the Drug Enforcement Administration, Diversion Control Division.

4. *Affected public who will be asked or required to respond, as well as a brief abstract:*

Affected public (Primary): Business or other for-profit.

Affected public (Other): Not-for-profit institutions; Federal, State, local, and tribal governments.

Abstract: In accordance with the Controlled Substance Act (CSA), every DEA registrant must make a biennial inventory and maintain, on a current basis, a complete and accurate record of each controlled substance manufactured, received, sold, delivered, or otherwise disposed of. 21 U.S.C. 827 and 958. These records must be maintained separately from all other records of the registrant or, alternatively, in the case of non-narcotic controlled substances, be in such form that required information is readily retrievable from the ordinary business records of the registrant. 21 U.S.C. 827(b)(2). The records must be kept and be available for at least two years for inspection and copying by officers or employees of the United States authorized by the Attorney General. 21 U.S.C. 827(b)(3). The records must be in accordance with and contain such relevant information as may be required by regulations promulgated by DEA. 21 U.S.C. 827(b)(1). These record requirements help to deter and detect diversion of controlled substances and ensure that registrants remain accountable for all controlled substances within their possession and/or control.

5. *An estimate of the total number of respondents and the amount of time estimated for an average respondent to respond:* The below table presents information regarding the number of respondents, responses and associated burden hours.

Activity	Number of annual respondents	Number of annual responses	Average time per response (minutes)	Total annual hours
DEA Form 41	90,629	90,629	30	45,315
Total	90,629	90,629		45, 315

6. *An estimate of the total public burden (in hours) associated with the proposed collection:* DEA estimates that this collection takes 45,315 annual burden hours.

If additional information is required please contact: Melody Braswell, Department Clearance Officer, United States Department of Justice, Justice Management Division, Policy and Planning Staff, Two Constitution Square, 145 N Street NE, Suite 3E.405B, Washington, DC 20530.

Dated: October 29, 2020.

Melody Braswell,

Department Clearance Officer for PRA, U.S. Department of Justice.

[FR Doc. 2020–24358 Filed 11–2–20; 8:45 am]

BILLING CODE 4410–09–P

DEPARTMENT OF LABOR

Employee Benefits Security Administration

204th Meeting of the Advisory Council on Employee Welfare and Pension Benefit Plans; Notice of Teleconference Meeting

Pursuant to the authority contained in Section 512 of the Employee Retirement Income Security Act of 1974 (ERISA), 29

U.S.C. 1142, the 204th open meeting of the Advisory Council on Employee Welfare and Pension Benefit Plans (also known as the ERISA Advisory Council) will be held via a teleconference on Friday, December 4, 2020.

The meeting will begin at 9:00 a.m. and end at approximately 5:30 p.m., with a one-hour break for lunch. The purpose of the morning session of the open meeting is for the Advisory Council members to finalize the recommendations they will present to the Secretary of Labor. During the afternoon session, the Council members will receive an update from leadership of the Employee Benefits Security Administration (EBSA) and present their recommendations.

The Council recommendations will be on the following issues: (1) Examining Top Hat Plan Participation and Reporting, and (2) Considerations for Recognizing and Addressing Participants with Diminished Capacity. Descriptions of these topics are available near the bottom of the Advisory Council's web page at *https://www.dol.gov/agencies/ebsa/about-ebsa/about-us/erisa-advisory-council.*

Instructions for public access to this teleconference meeting will be posted on the ERISA Advisory Council's web page at *https://www.dol.gov/agencies/ebsa/about-ebsa/about-us/erisa-advisory-council* prior to the meeting.

Organizations or members of the public wishing to submit a written statement may do so on or before Friday, November 27, 2020, to Christine Donahue, Executive Secretary, ERISA Advisory Council. Statements should be transmitted electronically as an email attachment in text or pdf format to *donahue.christine@dol.gov.* Statements transmitted electronically that are included in the body of the email will not be accepted. Relevant statements received on or before Friday, November 27, 2020, will be included in the record of the meeting and made available through the EBSA Public Disclosure Room. No deletions, modifications, or redactions will be made to the statements received as they are public records.

Individuals or representatives of organizations wishing to address the ERISA Advisory Council should forward their requests to the Executive Secretary no later than Friday, November 27, 2020, via email to *donahue.christine@dol.gov* or by telephoning (202) 693–8641. Oral presentations will be limited to ten minutes, time permitting, but an extended statement may be submitted for the record.

Individuals who need special accommodations should contact the Executive Secretary no later than Friday, November 27, 2020, via email to *donahue.christine@dol.gov* or by telephoning (202) 693–8641.

For more information about the meeting, contact the Executive Secretary via email to *donahue.christine@dol.gov* or by telephoning (202) 693–8641.

Signed at Washington, DC, this 28th day of October, 2020.

Jeanne Klinefelter Wilson,

Acting Assistant Secretary, Employee Benefits Security Administration.

[FR Doc. 2020–24291 Filed 11–2–20; 8:45 am]

BILLING CODE 4510–29–P

DEPARTMENT OF LABOR

Agency Information Collection Activities; Comment Request; Honoring Investments in Recruiting and Employing (HIRE) American Veterans (HIRE Vets) Medallion Program

AGENCY: Veterans' Employment and Training Service (VETS), United States Department of Labor (DOL).

ACTION: Notice.

SUMMARY: In compliance with the Paperwork Reduction Act of 1995, the DOL is soliciting public comments regarding this VETS-sponsored information collection to the Office of Management and Budget (OMB) for review and approval.

DATES: Comments pertaining to this information collection are due on or before January 6, 2021.

ADDRESSES:

Electronic submission: You may submit comments and attachments electronically at *http://www.regulations.gov.* Follow the online instructions for submitting comments.

Mail submission: 200 Constitution Ave. NW, Room S–5315, Washington, DC 2020. Comments are invited on: (1) Whether the collection of information is necessary for the proper performance of the functions of the DOL, including whether the information will have practical utility; (2) if the information will be processed and used in a timely manner; (3) the accuracy of the DOL's estimates of the burden and cost of the collection of information, including the validity of the methodology and assumptions used; (4) ways to enhance the quality, utility and clarity of the information collection; and (5) ways to minimize the burden of the collection of information on those who are to respond, including the use of automated collection techniques or other forms of information technology.

FOR FURTHER INFORMATION CONTACT: Randall Smith by telephone at 202–693–4745 (this is not a toll-free number) or by email at *smith.randall.e@dol.gov.*

SUPPLEMENTARY INFORMATION: The HIRE Vets Medallion Program is a voluntary employer recognition program administered by the Department of Labor—Veteran's Employment and Training Service (VETS). Through the HIRE Vets Medallion Program, VETS will solicit voluntary applications from employers for an award called the HIRE Vets Medallion Award. These awards are intended to recognize employer efforts to recruit, employ, and retain our Nation's veterans. All employers who employ at least one employee are eligible to apply for the Award.

This information collection is subject to the Paperwork Reduction Act (PRA). A Federal agency generally cannot conduct or sponsor a collection of information, and the public is generally not required to respond to an information collection, unless the OMB approves it and displays a currently valid OMB Control Number. In addition, notwithstanding any other provisions of law, no person shall generally be subject to penalty for failing to comply with a collection of information that does not display a valid OMB Control Number. *See* 5 CFR 1320.5(a) and 1320.6.

The DOL seeks PRA authorization for this information collection for three (3) years. OMB authorization for an Information Collection Review cannot be for more than three (3) years without renewal. The DOL notes that currently approved information collection requirements submitted to the OMB receive a month-to-month extension while they undergo review.

Agency: DOL–VETS.

Type of Review: Extension without changes.

Title of Collection: HIRE Vets Medallion Program.

OMB Control Number: 1293–0015.

Total Estimated Number of Respondents: 7,236.

Total Estimated Number of Responses: 34,711.

Total Estimated Annual Time Burden: 59,571 hours.

Total Estimated Annual Other Costs Burden: $0.

Authority: 44 U.S.C. 3506(c)(2)(A).

Dated: October 28, 2020.

John Lowry,

Assistant Secretary, Veterans' Employment and Training Service.

[FR Doc. 2020–24290 Filed 11–2–20; 8:45 am]

BILLING CODE 4510–79–P

NATIONAL AERONAUTICS AND SPACE ADMINISTRATION

[Notice (20–089)]

Planetary Science Advisory Committee; Meeting

AGENCY: National Aeronautics and Space Administration.

ACTION: Notice of meeting.

SUMMARY: In accordance with the Federal Advisory Committee Act, Public Law 92–463, as amended, the National Aeronautics and Space Administration (NASA) announces a meeting of the Planetary Science Advisory Committee. The meeting will be held for the purpose of soliciting, from the scientific community and other persons, scientific and technical information relevant to program planning.

DATES: Monday, November 30, 2020, 10:00 a.m. to 6:00 p.m., Eastern Time.

ADDRESSES: Virtual meeting via WebEx and dial-in teleconference only.

FOR FURTHER INFORMATION CONTACT: Ms. Karshelia Henderson, Science Mission Directorate, NASA Headquarters, Washington, DC 20546, (202) 358–2355 or *khenderson@nasa.gov.*

SUPPLEMENTARY INFORMATION: As noted above, this meeting will be available to the public telephonically and by WebEx only. The meeting event for attendees is: *https://nasaenterprise.webex.com/nasaenterprise/onstage/g.php?MTID=e1d4eb8fe5eb5093d8999eefa673a6ff0.* The event number is 199 703 2008 and the password is KjCqPJD*864. For audio, when you join the Webex event, you may use your computer or provide your phone number to receive a call back. Otherwise, call the U.S. toll conference number: 1–415–527–5035 and enter the access code 199 703 2008.

The agenda for the meeting includes the following topics:

—Planetary Science Division Update

—Planetary Science Division Research and Analysis Program Update

It is imperative that the meeting be held on these dates to accommodate the scheduling priorities of the key participants.

Patricia Rausch,

Advisory Committee Management Officer, National Aeronautics and Space Administration.

[FR Doc. 2020–24365 Filed 11–2–20; 8:45 am]

BILLING CODE 7510–13–P

NATIONAL FOUNDATION ON THE ARTS AND THE HUMANITIES

Institute of Museum and Library Services

Notice of Proposed Information Collection Requests: 2023–2027 IMLS Grants to States Program Five-Year State Plan Guidelines for State Library Administrative Agencies

AGENCY: Institute of Museum and Library Services, National Foundation for the Arts and the Humanities.

ACTION: Notice, request for comments on this collection of information.

SUMMARY: The Institute of Museum and Library Services (IMLS), as part of its continuing effort to reduce paperwork and respondent burden, conducts a pre-clearance consultation program to provide the general public and federal agencies with an opportunity to comment on proposed and/or continuing collections of information in accordance with the Paperwork Reduction Act. This pre-clearance consultation program helps to ensure that requested data can be provided in the desired format, reporting burden (time and financial resources) is minimized, collection instruments are clearly understood, and the impact of collection requirements on respondents can be properly assessed. By this notice, IMLS is soliciting comments concerning a plan to continue the IMLS Grants to States Program Five-Year State Plan Guidelines for State Library Administrative Agencies instructions. Each State Library Administrative Agency (SLAA) must submit a plan that details library services goals for a five-year period to receive funding. A copy of the proposed information collection request can be obtained by contacting the individual listed below in the **ADDRESSES** section of this notice.

DATES: Written comments must be submitted to the office listed in the addressee section below on or before December 30, 2020.

ADDRESSES: Send comments to Connie Bodner, Ph.D., Director of Grants Policy and Management, Office of Grants Policy and Management, Institute of Museum and Library Services, 955 L'Enfant Plaza North SW, Suite 4000, Washington, DC 20024–2135. Dr. Bodner can be reached by telephone at 202–653–4636, by email at *cbodner@imls.gov,* or by teletype (TTY/TDD) for persons with hearing difficulty at 202–653–4614. Office hours are from 8:30 a.m. to 5 p.m., E.T., Monday through Friday, except Federal holidays.

FOR FURTHER INFORMATION CONTACT: Teresa DeVoe, Associate Deputy Director of State Programs, Office of Library Services, Institute of Museum and Library Services, 955 L'Enfant Plaza North SW, Suite 4000, Washington, DC 20024–2135. Ms. DeVoe can be reached by telephone at 202–653–4778, by email at *tdevoe@imls.gov,* or by teletype (TTY/TDD) for persons with hearing difficulty at 202–653–4614. Office hours are from 8:30 a.m. to 5 p.m., E.T., Monday through Friday, except Federal holidays.

SUPPLEMENTARY INFORMATION: IMLS is particularly interested in public comment that help the agency to:

- Evaluate whether the proposed collection of information is necessary for the proper performance of the functions of the agency, including whether the information will have practical utility;
- Evaluate the accuracy of the agency's estimate of the burden of the proposed collection of information including the validity of the methodology and assumptions used;
- Enhance the quality, utility, and clarity of the information to be collected; and
- Minimize the burden of the collection of information on those who are to respond, including through the use of appropriate automated electronic, mechanical, or other technological collection techniques, or other forms of information technology, *e.g.,* permitting electronic submissions of responses.

I. Background

The Institute of Museum and Library Services is the primary source of Federal support for the Nation's libraries and museums. We advance, support, and empower America's museums, libraries, and related organizations through grant making, research, and policy development. Our vision is a nation where museums and libraries work together to transform the lives of individuals and communities. To learn more, visit *www.imls.gov.*

II. Current Actions

The Grants to States program is the largest grant program administered by IMLS, providing financial assistance to develop library services throughout the States, U.S. Territories, and the Freely Associated States. To receive funds under the Grants to States program, each established State Library Administrative Agency (SLAA) must submit to the Director of IMLS a Five-Year State Plan detailing certain goals, assurances, and procedures for a five-year period. 20 U.S.C. 9134(a). The upcoming five-year period will cover federal fiscal years 2023–2027, with Five-Year State Plans

due to IMLS on June 30, 2022. Guidelines for the Five-Year State Plans have already been developed and approved by OMB, and this update to the guidelines will incorporate the latest language from the revised Museum and Library Services Act of 2018. This language does not substantively change the guidelines but reflects minor updates to the purposes of the LSTA, to which the SLAAs must adhere when creating goals for the new Five-Year State Plans.

The Five-Year State Plan identifies a State's library needs, sets forth the activities to be taken toward meeting the identified needs supported with the assistance of Federal funds made available under the Library Services and Technology Act (''LSTA''), and provides assurances that the officially designated SLAA has the fiscal and legal authority and capability to administer all aspects of any award under the Grants to States program. 20 U.S.C. 9122(5). The Five-Year State Plan must also provide assurances for establishing the State's policies, priorities, criteria and procedures necessary to the implementation of all programs under the LSTA. 20 U.S.C. 9122(5).

This action is to renew the forms and instructions for the IMLS Grants to States Program Five-Year State Plan Guidelines for State Library Administrative Agencies for the next three years.

Agency: Institute of Museum and Library Services.

Title: 2023–2027 IMLS Grants to States Program Five-Year State Plan Guidelines for State Library Administrative Agencies.

OMB Number: 3137–0029.

Frequency: Once every five years.

Affected Public: State Library Administrative Agencies (SLAAs).

Number of Respondents: 59.

Estimated Average Burden per Response: 90 hours.

Estimated Total Annual Burden: 5,310 hours.

Total Annualized Capital/Startup Costs: n/a.

Total Annual Costs: $158,078.70.

Public Comments Invited: Comments submitted in response to this notice will be summarized and/or included in the request for OMB's clearance of this information collection.

Dated: October 29, 2020.

Kim Miller,

Senior Grants Management Specialist, Institute of Museum and Library Services.

[FR Doc. 2020–24347 Filed 11–2–20; 8:45 am]

BILLING CODE 7036–01–P

NATIONAL SCIENCE FOUNDATION

Advisory Committee for Mathematical and Physical Sciences; Notice of Meeting

In accordance with the Federal Advisory Committee Act (Pub. L. 92–463, as amended), the National Science Foundation (NSF) announces the following meeting:

NAME AND COMMITTEE CODE: Advisory Committee for Mathematical and Physical Sciences (#66).

DATE AND TIME: November 30, 2020; 12:15 p.m. to 4:15 p.m.

PLACE: NSF, 2415 Eisenhower Avenue, Alexandria, VA 22314 (Virtual attendance).

To attend the virtual meeting, please send your request for the virtual meeting link to Kathleen McCloud at the following email address: *kmccloud@nsf.gov*.

TYPE OF MEETING: Open.

CONTACT PERSON: Leighann Martin, National Science Foundation, 2415 Eisenhower Avenue, Room C 9000, Alexandria, Virginia 22314; Telephone: 703/292–4659.

SUMMARY OF MINUTES: Minutes and meeting materials will be available on the MPS Advisory Committee website at *http://www.nsf.gov/mps/advisory.jsp* or can be obtained from the contact person listed above.

PURPOSE OF MEETING: To provide advice, recommendations and counsel on major goals and policies pertaining to MPS programs and activities.

Agenda

Monday, November 30, 2020

- Call to Order and Official Opening of the Meeting—Catherine Hunt, MPSAC Chair
- FACA and COI Briefing—Kathleen McCloud, MPS
- Approval of Prior Meeting Minutes—Catherine Hunt, MPSAC Chair
- UPDATE: MPS—Sean Jones, Assistant Director, MPS
- DMS COV Report Presentation—Russel Caflisch and Tatiana Toro, DMS CoV Chairs
- DMS COV Report discussion and vote on acceptance—Catherine Hunt, MPSAC Chair
- Update on the MPS and the Living World Subcommittee: Catherine Hunt, MPSAC Chair
- Implementation of community input on large scale NSF research infrastructure discussion: Ralph Gaume, AST Division Director
- Closing remarks and adjourn for the day

Dated: October 28, 2020.

Crystal Robinson,

Committee Management Officer.

[FR Doc. 2020–24252 Filed 11–2–20; 8:45 am]

BILLING CODE 7555–01–P

NATIONAL SCIENCE FOUNDATION

Proposal Review Panel for Physics; Notice of Meeting

In accordance with the Federal Advisory Committee Act (Pub. L. 92–463, as amended), the National Science Foundation (NSF) announces the following meeting:

NAME AND COMMITTEE CODE: Proposal Review Panel for Division of Physics (1208)—Center for Ultracold Atoms (CUA).

DATE AND TIME:

November 30, 2020; 10:00 a.m.–6:30 p.m.
December 1, 2020; 10:00 a.m.–5:00 p.m.
December 2, 2020; 10:00 a.m.–1:00 p.m.

PLACE: Massachusetts Institute of Technology, 77 Massachusetts Avenue, Cambridge, MA 02139.

TYPE OF MEETING: Part-open.

CONTACT PERSONS: James Shank, Program Director for Physics Frontier Centers, Division of Physics; National Science Foundation, 2415 Eisenhower Avenue, Room W9214, Alexandria, VA 22314; Telephone: (703) 292–4516.

PURPOSE OF MEETING: Virtual site visit to provide an evaluation of the progress of the projects at the host site for the Division of Physics at the National Science Foundation.

Agenda

November 30, 2020; 10:00 a.m.–6:30 p.m.

10:00 a.m.–12:00 p.m. Directors Overview & Science Talks—Session 1
12:00 p.m.–01:00 p.m. Lunch
01:00 p.m.–03:00 p.m. Science Talks—Session 2
03:30 p.m.–04:30 p.m. Executive Session (CLOSED)
Questions delivered to PIs
04:30 p.m.–06:30 p.m. Poster Session

December 1, 2020; 10:00 a.m.–5:00 p.m.

10:00 a.m.–12:00 p.m. Education/Outreach/Diversity
12:00 p.m.–01:00 p.m. Lunch
01:00 p.m.–02:00 p.m. Directors Conclusion and Plans for Coming Year
02:00 p.m.–03:00 p.m. University Administrators
03:00 p.m.–04:30 p.m. Executive Session (CLOSED)
04:30 p.m.–05:00 p.m. Questions delivered to PIs

December 2, 2020; 10:00 a.m.–1:00PM

10:00 a.m.–11:00 a.m. Responses to Questions

11:00 a.m.–01:00 p.m. Panel Discussion of Report (Closed)

REASON FOR CLOSING: Topics to be discussed and evaluated during the virtual site review will include information of a proprietary or confidential nature, including technical information and information on personnel. These matters are exempt under 5 U.S.C. 552b(c), (4) and (6) of the Government in the Sunshine Act.

Dated: October 28, 2020.

Suzanne Plimpton,

Acting Committee Management Officer.

[FR Doc. 2020–24249 Filed 11–2–20; 8:45 am]

BILLING CODE 7555–01–P

NATIONAL SCIENCE FOUNDATION

Astronomy and Astrophysics Advisory Committee; Notice of Meeting

In accordance with the Federal Advisory Committee Act (Pub. L. 92–463, as amended), the National Science Foundation (NSF) announces the following meeting:

NAME AND COMMITTEE CODE: Astronomy and Astrophysics Advisory Committee (#13883).

DATE AND TIME: January 26, 2021; 9:00 a.m.–5:00 p.m., January 27, 2021; 9:00 a.m.–12:00 p.m.

PLACE: National Science Foundation, 2415 Eisenhower Avenue, Alexandria, VA 22314 (via Zoom).

Attendance information for the meeting will be forthcoming on the website: *https://www.nsf.gov/mps/ast/aaac.jsp*.

TYPE OF MEETING: Open.

CONTACT PERSON: Dr. Martin Still, Program Director, Division of Astronomical Sciences, Suite W 9188; National Science Foundation, 2415 Eisenhower Avenue, Alexandria, VA 22314; Telephone: 703–292–4290.

PURPOSE OF MEETING: To provide advice and recommendations to the National Science Foundation (NSF), the National Aeronautics and Space Administration (NASA) and the U.S. Department of Energy (DOE) on issues within the field of astronomy and astrophysics that are of mutual interest and concern to the agencies.

AGENDA: To hear presentations of current programming by representatives from NSF, NASA, DOE and other agencies relevant to astronomy and astrophysics; to discuss current and potential areas of cooperation between the agencies; to formulate recommendations for continued and new areas of cooperation and mechanisms for achieving them. Discuss the Committee's draft annual report due 15 March 2021.

Dated: October 29, 2020.

Crystal Robinson,

Committee Management Officer.

[FR Doc. 2020–24341 Filed 11–2–20; 8:45 am]

BILLING CODE 7555–01–P

NATIONAL SCIENCE FOUNDATION

Astronomy and Astrophysics Advisory Committee; Notice of Meeting

In accordance with the Federal Advisory Committee Act (Pub. L. 92–463, as amended), the National Science Foundation (NSF) announces the following meeting:

NAME AND COMMITTEE CODE: Astronomy and Astrophysics Advisory Committee (#13883).

DATE AND TIME: February 24, 2021; 12:00 p.m.–4:00 p.m.

PLACE: National Science Foundation, 2415 Eisenhower Avenue, Room C9080, Alexandria, VA 22314 (via Zoom).

Attendance information for the meeting will be forthcoming on the website: *http://www.nsf.gov/mps/ast/aaac.jsp*.

TYPE OF MEETING: Open.

CONTACT PERSON: Dr. Martin Still, Program Director, Division of Astronomical Sciences, Suite W 9188; National Science Foundation, 2415 Eisenhower Avenue, Alexandria, VA 22314; Telephone: 703–292–4290.

PURPOSE OF MEETING: To provide advice and recommendations to the National Science Foundation (NSF), the National Aeronautics and Space Administration (NASA) and the U.S. Department of Energy (DOE) on issues within the field of astronomy and astrophysics that are of mutual interest and concern to the agencies.

AGENDA: To provide updates on Agency activities and to discuss the Committee's draft annual report due 15 March 2021.

Dated: October 29, 2020.

Crystal Robinson,

Committee Management Officer.

[FR Doc. 2020–24342 Filed 11–2–20; 8:45 am]

BILLING CODE 7555–01–P

NUCLEAR REGULATORY COMMISSION

[NRC–2020–0242]

Monthly Notice; Applications and Amendments to Facility Operating Licenses and Combined Licenses Involving No Significant Hazards Considerations

AGENCY: Nuclear Regulatory Commission.

ACTION: Monthly notice.

SUMMARY: Pursuant to section 189.a.(2) of the Atomic Energy Act of 1954, as amended (the Act), the U.S. Nuclear Regulatory Commission (NRC) is publishing this regular monthly notice. The Act requires the Commission to publish notice of any amendments issued, or proposed to be issued, and grants the Commission the authority to issue and make immediately effective any amendment to an operating license or combined license, as applicable, upon a determination by the Commission that such amendment involves no significant hazards consideration (NSHC), notwithstanding the pendency before the Commission of a request for a hearing from any person. This monthly notice includes all amendments issued, or proposed to be issued, from September 22, 2020, to October 15, 2020. The last notice was published on October 6, 2020. This notice also incorporates a title change, as noticed in the **Federal Register** on October 6, 2020. The next monthly notice is expected to be published in the **Federal Register** on or about December 1, 2020.

DATES: Comments must be filed by December 3, 2020. A request for a hearing or a petition for leave to intervene must be filed by January 4, 2021.

ADDRESSES: You may submit comments by any of the following methods; however, the NRC encourages electronic comment submission through the Federal Rulemaking website:

- *Federal Rulemaking Website:* Go to *https://www.regulations.gov* and search for Docket ID NRC–2020–0242. Address questions about Docket IDs in *Regulations.gov* to Jennifer Borges; telephone: 301–287–9127; email: *Jennifer.Borges@nrc.gov*. For technical questions, contact the individual listed in the **FOR FURTHER INFORMATION CONTACT** section of this document.
- *Mail comments to:* Office of Administration, Mail Stop: TWFN–7–A60M, U.S. Nuclear Regulatory Commission, Washington, DC 20555–

0001, ATTN: Program Management, Announcements and Editing Staff.

For additional direction on obtaining information and submitting comments, see ''Obtaining Information and Submitting Comments'' in the **SUPPLEMENTARY INFORMATION** section of this document.

FOR FURTHER INFORMATION CONTACT: Bernadette Abeywickrama, Office of Nuclear Reactor Regulation, U.S. Nuclear Regulatory Commission, Washington DC 20555–0001, telephone: 301–415–4081, email: *Bernadette.Abeywickrama@nrc.gov,.*

SUPPLEMENTARY INFORMATION:

I. Obtaining Information and Submitting Comments

A. Obtaining Information

Please refer to Docket ID NRC–2020–0242, facility name, unit number(s), docket number(s), application date, and subject when contacting the NRC about the availability of information for this action. You may obtain publicly available information related to this action by any of the following methods:

- *Federal Rulemaking Website:* Go to *https://www.regulations.gov* and search for Docket ID NRC–2020–0242.
- *NRC's Agencywide Documents Access and Management System (ADAMS):* You may obtain publicly available documents online in the ADAMS Public Documents collection at *https://www.nrc.gov/reading-rm/adams.html*. To begin the search, select ''Begin Web-based ADAMS Search.'' For problems with ADAMS, please contact the NRC's Public Document Room (PDR) reference staff at 1–800–397–4209, 301–415–4737, or by email to *pdr.resource@nrc.gov*. The ADAMS accession number for each document referenced (if it is available in ADAMS) is provided the first time that it is mentioned in this document.
- *Attention:* The PDR, where you may examine and order copies of public documents is currently closed. You may submit your request to the PDR via email at *PDR.Resource@nrc.gov* or call 1–800–397–4209 between 8:00 a.m. and 4:00 p.m. (EST), Monday through Friday, except Federal holidays.

B. Submitting Comments

The NRC encourages electronic comment submission through the Federal Rulemaking website (*https://www.regulations.gov*). Please include Docket ID NRC–2020–0242, facility name, unit number(s), docket number(s), application date, and subject, in your comment submission.

The NRC cautions you not to include identifying or contact information that you do not want to be publicly disclosed in your comment submission. The NRC will post all comment submissions at *https://www.regulations.gov* as well as enter the comment submissions into ADAMS. The NRC does not routinely edit comment submissions to remove identifying or contact information.

If you are requesting or aggregating comments from other persons for submission to the NRC, then you should inform those persons not to include identifying or contact information that they do not want to be publicly disclosed in their comment submission. Your request should state that the NRC does not routinely edit comment submissions to remove such information before making the comment submissions available to the public or entering the comment into ADAMS.

II. Notice of Consideration of Issuance of Amendments to Facility Operating Licenses and Combined Licenses and Proposed No Significant Hazards Consideration Determination

For the facility-specific amendment requests shown below, the Commission finds that the licensees' analyses, consistent with title 10 of *the Code of Federal Regulations* (10 CFR) section 50.91, are sufficient to support the proposed determination that these amendment requests involve NSHC. Under the Commission's regulations in 10 CFR 50.92, operation of the facilities in accordance with the proposed amendments would not (1) involve a significant increase in the probability or consequences of an accident previously evaluated; or (2) create the possibility of a new or different kind of accident from any accident previously evaluated; or (3) involve a significant reduction in a margin of safety.

The Commission is seeking public comments on these proposed determinations. Any comments received within 30 days after the date of publication of this notice will be considered in making any final determinations.

Normally, the Commission will not issue the amendments until the expiration of 60 days after the date of publication of this notice. The Commission may issue any of these license amendments before expiration of the 60-day period provided that its final determination is that the amendment involves NSHC. In addition, the Commission may issue any of these amendments prior to the expiration of the 30-day comment period if circumstances change during the 30-day comment period such that failure to act in a timely way would result, for example, in derating or shutdown of the facility. If the Commission takes action on any of these amendments prior to the expiration of either the comment period or the notice period, it will publish in the **Federal Register** a notice of issuance. If the Commission makes a final NSHC determination for any of these amendments, any hearing will take place after issuance. The Commission expects that the need to take action on any amendment before 60 days have elapsed will occur very infrequently.

A. Opportunity To Request a Hearing and Petition for Leave To Intervene

Within 60 days after the date of publication of this notice, any person (petitioner) whose interest may be affected by any of these actions may file a request for a hearing and petition for leave to intervene (petition) with respect to that action. Petitions shall be filed in accordance with the Commission's ''Agency Rules of Practice and Procedure'' in 10 CFR part 2. Interested persons should consult a current copy of 10 CFR 2.309. The NRC's regulations are accessible electronically from the NRC Library on the NRC's website at *https://www.nrc.gov/reading-rm/doc-collections/cfr/*. If a petition is filed, the Commission or a presiding officer will rule on the petition and, if appropriate, a notice of a hearing will be issued.

As required by 10 CFR 2.309(d), the petition should specifically explain the reasons why intervention should be permitted with particular reference to the following general requirements for standing: (1) The name, address, and telephone number of the petitioner; (2) the nature of the petitioner's right to be made a party to the proceeding; (3) the nature and extent of the petitioner's property, financial, or other interest in the proceeding; and (4) the possible effect of any decision or order which may be entered in the proceeding on the petitioner's interest.

In accordance with 10 CFR 2.309(f), the petition must also set forth the specific contentions that the petitioner seeks to have litigated in the proceeding. Each contention must consist of a specific statement of the issue of law or fact to be raised or controverted. In addition, the petitioner must provide a brief explanation of the bases for the contention and a concise statement of the alleged facts or expert opinion that support the contention and on which the petitioner intends to rely in proving the contention at the hearing. The petitioner must also provide references to the specific sources and documents on which the petitioner intends to rely to support its position on

the issue. The petition must include sufficient information to show that a genuine dispute exists with the applicant or licensee on a material issue of law or fact. Contentions must be limited to matters within the scope of the proceeding. The contention must be one that, if proven, would entitle the petitioner to relief. A petitioner who fails to satisfy the requirements of 10 CFR 2.309(f) with respect to at least one contention will not be permitted to participate as a party.

Those permitted to intervene become parties to the proceeding, subject to any limitations in the order granting leave to intervene. Parties would have the opportunity to participate fully in the conduct of the hearing with respect to resolution of that party's admitted contentions, including the opportunity to present evidence, consistent with the NRC's regulations, policies, and procedures.

Petitions must be filed no later than 60 days from the date of publication of this notice. Petitions and motions for leave to file new or amended contentions that are filed after the deadline will not be entertained absent a determination by the presiding officer that the filing demonstrates good cause by satisfying the three factors in 10 CFR 2.309(c)(1)(i) through (iii). The petition must be filed in accordance with the filing instructions in the ''Electronic Submissions (E-Filing)'' section of this document.

If a hearing is requested, and the Commission has not made a final determination on the issue of no significant hazards consideration, the Commission will make a final determination on the issue of no significant hazards consideration. The final determination will serve to establish when the hearing is held. If the final determination is that the amendment request involves no significant hazards consideration, the Commission may issue the amendment and make it immediately effective, notwithstanding the request for a hearing. Any hearing would take place after issuance of the amendment. If the final determination is that the amendment request involves a significant hazards consideration, then any hearing held would take place before the issuance of the amendment unless the Commission finds an imminent danger to the health or safety of the public, in which case it will issue an appropriate order or rule under 10 CFR part 2.

A State, local governmental body, Federally recognized Indian Tribe, or agency thereof, may submit a petition to the Commission to participate as a party under 10 CFR 2.309(h)(1). The petition should state the nature and extent of the petitioner's interest in the proceeding. The petition should be submitted to the Commission no later than 60 days from the date of publication of this notice. The petition must be filed in accordance with the filing instructions in the ''Electronic Submissions (E-Filing)'' section of this document, and should meet the requirements for petitions set forth in this section, except that under 10 CFR 2.309(h)(2) a State, local governmental body, or Federally recognized Indian Tribe, or agency thereof does not need to address the standing requirements in 10 CFR 2.309(d) if the facility is located within its boundaries. Alternatively, a State, local governmental body, Federally recognized Indian Tribe, or agency thereof may participate as a non-party under 10 CFR 2.315(c).

If a hearing request is granted, any person who is not a party to the proceeding (including persons who are affiliated with or represented by a party) may, at the discretion of the presiding officer, be permitted to make a limited appearance pursuant to the provisions of 10 CFR 2.315(a). A person making a limited appearance may make an oral or written statement of his or her position on the issues but may not otherwise participate in the proceeding. A limited appearance may be made at any session of the hearing or at any prehearing conference, subject to the limits and conditions as may be imposed by the presiding officer. Details regarding the opportunity to make a limited appearance will be provided by the presiding officer if such sessions are scheduled.

B. Electronic Submissions (E-Filing)

All documents filed in NRC adjudicatory proceedings, including a request for hearing and petition for leave to intervene (petition), any motion or other document filed in the proceeding prior to the submission of a request for hearing or petition to intervene, and documents filed by interested governmental entities that request to participate under 10 CFR 2.315(c), must be filed in accordance with the NRC's E-Filing rule (72 FR 49139; August 28, 2007, as amended at 77 FR 46562; August 3, 2012). The E-Filing process requires participants to submit and serve all adjudicatory documents over the internet, or in some cases to mail copies on electronic storage media. Detailed guidance on making electronic submissions may be found in the Guidance for Electronic Submissions to the NRC and on the NRC website at *https://www.nrc.gov/site-help/e-submittals.html*. Participants may not submit paper copies of their filings unless they seek an exemption in accordance with the procedures described below.

To comply with the procedural requirements of E-Filing, at least 10 days prior to the filing deadline, the participant should contact the Office of the Secretary by email at *hearing.docket@nrc.gov,* or by telephone at 301–415–1677, to (1) request a digital identification (ID) certificate, which allows the participant (or its counsel or representative) to digitally sign submissions and access the E-Filing system for any proceeding in which it is participating; and (2) advise the Secretary that the participant will be submitting a petition or other adjudicatory document (even in instances in which the participant, or its counsel or representative, already holds an NRC issued digital ID certificate). Based upon this information, the Secretary will establish an electronic docket for the hearing in this proceeding if the Secretary has not already established an electronic docket.

Information about applying for a digital ID certificate is available on the NRC's public website at *https://www.nrc.gov/site-help/e-submittals/getting-started.html*. Once a participant has obtained a digital ID certificate and a docket has been created, the participant can then submit adjudicatory documents. Submissions must be in Portable Document Format (PDF). Additional guidance on PDF submissions is available on the NRC's public website at *https://www.nrc.gov/site-help/electronic-sub-ref-mat.html*. A filing is considered complete at the time the document is submitted through the NRC's E-Filing system. To be timely, an electronic filing must be submitted to the E-Filing system no later than 11:59 p.m. Eastern Time on the due date. Upon receipt of a transmission, the E-Filing system time stamps the document and sends the submitter an email notice confirming receipt of the document. The E-Filing system also distributes an email notice that provides access to the document to the NRC's Office of the General Counsel and any others who have advised the Office of the Secretary that they wish to participate in the proceeding, so that the filer need not serve the document on those participants separately. Therefore, applicants and other participants (or their counsel or representative) must apply for and receive a digital ID certificate before adjudicatory documents are filed so that they can obtain access to the documents via the E-Filing system.

A person filing electronically using the NRC's adjudicatory E-Filing system may seek assistance by contacting the NRC's Electronic Filing Help Desk through the ''Contact Us'' link located on the NRC's public website at *https://www.nrc.gov/site-help/e-submittals.html,* by email to *MSHD.Resource@nrc.gov,* or by a toll-free call at 1–866–672–7640. The NRC Electronic Filing Help Desk is available between 9 a.m. and 6 p.m., Eastern Time, Monday through Friday, excluding government holidays.

Participants who believe that they have a good cause for not submitting documents electronically must file an exemption request, in accordance with 10 CFR 2.302(g), with their initial paper filing stating why there is good cause for not filing electronically and requesting authorization to continue to submit documents in paper format. Such filings must be submitted by: (1) First class mail addressed to the Office of the Secretary of the Commission, U.S. Nuclear Regulatory Commission, Washington, DC 20555–0001, Attention: Rulemaking and Adjudications Staff; or (2) courier, express mail, or expedited delivery service to the Office of the Secretary, 11555 Rockville Pike, Rockville, Maryland 20852, Attention: Rulemaking and Adjudications Staff. Participants filing adjudicatory documents in this manner are responsible for serving the document on all other participants. Filing is considered complete by first-class mail as of the time of deposit in the mail, or by courier, express mail, or expedited delivery service upon depositing the document with the provider of the service. A presiding officer, having granted an exemption request from using E-Filing, may require a participant or party to use E-Filing if the presiding officer subsequently determines that the reason for granting the exemption from use of E-Filing no longer exists.

Documents submitted in adjudicatory proceedings will appear in the NRC's electronic hearing docket which is available to the public at *https://adams.nrc.gov/ehd,* unless excluded pursuant to an order of the Commission or the presiding officer. If you do not have an NRC issued digital ID certificate as described above, click ''cancel'' when the link requests certificates and you will be automatically directed to the NRC's electronic hearing dockets where you will be able to access any publicly available documents in a particular hearing docket. Participants are requested not to include personal privacy information, such as social security numbers, home addresses, or personal phone numbers in their filings, unless an NRC regulation or other law requires submission of such information. For example, in some instances, individuals provide home addresses in order to demonstrate proximity to a facility or site. With respect to copyrighted works, except for limited excerpts that serve the purpose of the adjudicatory filings and would constitute a Fair Use application, participants are requested not to include copyrighted materials in their submission.

The table below provides the plant name, docket number, date of application, ADAMS accession number, and location in the application of the licensees' proposed NSHC determinations. For further details with respect to these license amendment applications, see the applications for amendment, which are available for public inspection in ADAMS. For additional direction on accessing information related to this document, see the ''Obtaining Information and Submitting Comments'' section of this document.

LICENSE AMENDMENT REQUEST(S)

Arizona Public Service Company, et al; Palo Verde Nuclear Generating Station, Units 1, 2, and 3; Maricopa County, AZ	
Docket No(s)	50–528, 50–529, 50–530.
Application date	August 21, 2020.
ADAMS Accession No	ML20234A737.
Location in Application of NSHC	Pages 5–7 of the Enclosure.
Brief Description of Amendment(s)	The proposed amendments would revise the Palo Verde Nuclear Generating Station, Units 1, 2, and 3 technical specifications (TSs) to make necessary administrative changes. Specifically, the proposed amendments would make the following five administrative changes to the TSs that remove no longer applicable information, extraneous information, and adopt standard industry terminology: (1) TS 3.1.5, ''Control Element Assembly (CEA) Alignment,'' Surveillance Requirement 3.1.5.3, to remove a one-time use Note for Unit 2 CEA No. 88; (2) TS 3.7.17, ''Spent Fuel Assembly Storage,'' TS 4.3, ''Fuel Storage,'' and TS 5.5.21, ''Spent Fuel Storage Rack Neutron Absorber Monitoring Program,'' to remove no longer applicable pages related to the implementation of Amendment 203, which addressed a revised spent fuel pool criticality analysis; (3) TS 4.1, ''Site Location,'' to remove extraneous information from the site location description; (4) TS 5.5.2, ''Primary Coolant Sources Outside Containment,'' to remove a remaining post-accident sampling subsystem reference; (5) TS 5.7, ''High Radiation Area,'' to modify radiation protection terminology to match industry standards.
Proposed Determination	NSHC.
Name of Attorney for Licensee, Mailing Address	Michael G. Green, Associate General Counsel, Nuclear and Environmental, Pinnacle West Capital Corporation, P.O. Box 52034, MS 7602, Phoenix, AZ 85072–2034.
NRC Project Manager, Telephone Number	Siva Lingam, 301–415–1564.
Energy Harbor Nuclear Corp. and Energy Harbor Nuclear Generation LLC; Perry Nuclear Power Plant, Unit 1; Lake County, OH	
Docket No(s)	50–440.
Application date	September 24, 2020.
ADAMS Accession No	ML20268C198.
Location in Application of NSHC	Pages 6–8 of the Enclosure.
Brief Description of Amendment(s)	The proposed amendment would adopt Technical Specifications Task Force (TSTF) Traveler TSTF–582, ''Reactor Pressure Vessel Water Inventory Control (RPV WIC) Enhancements.'' The technical specifications related to RPV WIC are revised to incorporate operating experience and to correct errors and omissions in TSTF–542, Revision 2, ''Reactor Pressure Vessel Water Inventory Control.''
Proposed Determination	NSHC.
Name of Attorney for Licensee, Mailing Address	Rick Giannantonio, General Counsel, Energy Harbor Nuclear Corp., Mail Stop A–GO–15, 76 South Main Street, Akron, OH 44308.
NRC Project Manager, Telephone Number	Scott Wall, 301–415–2855.
Entergy Louisiana, LLC and Entergy Operations, Inc.; River Bend Station, Unit 1; West Feliciana Parish, LA	
Docket No(s)	50–458.

LICENSE AMENDMENT REQUEST(S)—Continued

Application date	September 4, 2020.
ADAMS Accession No	ML20248H528.
Location in Application of NSHC	Pages 4–6 of the Enclosure
Brief Description of Amendment(s)	The proposed amendment would revise the technical specifications related to reactor pressure vessel (RPV) water inventory control (WIC) to incorporate operating experience and to correct errors and omissions in Technical Specifications Task Force (TSTF) Traveler TSTF–542, Revision 2, ''Reactor Pressure Vessel Water Inventory Control.'' The proposed changes are consistent with NRC-approved TSTF 582, ''RPV WIC Enhancements.''
Proposed Determination	NSHC.
Name of Attorney for Licensee, Mailing Address	Anna Vinson Jones, Senior Counsel, Entergy Services, Inc.,101 Constitution Avenue NW, Suite 200 East, Washington, DC 20001.
NRC Project Manager, Telephone Number	Jason Drake, 301–415–8378.

Entergy Louisiana, LLC, and Entergy Operations, Inc.; River Bend Station, Unit 1; West Feliciana Parish, LA; Entergy Operations, Inc., System Energy Resources, Inc., Cooperative Energy, A Mississippi Electric Cooperative, and Entergy Mississippi, LLC; Grand Gulf Nuclear Station, Unit 1; Claiborne County, MS

Docket No(s)	50–458, 50–416.
Application date	September 18, 2020.
ADAMS Accession No	ML20262H225.
Location in Application of NSHC	Pages 2–4 of the Enclosure.
Brief Description of Amendment(s)	The proposed amendments would revise the technical specifications (TSs) in accordance with Technical Specifications Task Force (TSTF) Traveler TSTF–563, Revision 0, ''Revise Instrument Testing Definitions to Incorporate the Surveillance Frequency Control Program,'' dated May 10, 2017 (ADAMS Accession No. ML17130A819). TSTF–563 revises the TS definitions of Channel Calibration and Channel Functional Test, which currently permit performance by any series of sequential, overlapping, or total channel steps, to allow the required frequency for testing the components or devices in each step to be determined in accordance with the TS Surveillance Frequency Control Program. The NRC issued a final safety evaluation approving TSTF–563, Revision 0, on December 4, 2018 (ADAMS Accession No. ML18333A144).
Proposed Determination	NSHC.
Name of Attorney for Licensee, Mailing Address	Anna Vinson Jones, Senior Counsel, Entergy Services, Inc.,101 Constitution Avenue NW, Suite 200 East, Washington, DC 20001.
NRC Project Manager, Telephone Number	Siva Lingam, 301–415–1564.

Exelon Generation Company, LLC; Limerick Generating Station, Units 1 and 2; Montgomery County, PA

Docket No(s)	50–352, 50–353.
Application date	September 3, 2020.
ADAMS Accession No	ML20247J372.
Location in Application of NSHC	Pages 3–5 of the Enclosure.
Brief Description of Amendment(s)	The proposed amendments would revise the Limerick, Units 1 and 2, technical specifications (TSs) to adopt Technical Specifications Task Force (TSTF) Traveler TSTF–582, Revision 0, ''RPV [Reactor Pressure Vessel] WIC [Water Inventory Control] Enhancements.'' The TSs related to RPV WIC would be revised to incorporate operating experience and to correct errors and omissions in TSTF–542, Revision 2, ''Reactor Pressure Vessel Water Inventory Control.''
Proposed Determination	NSHC.
Name of Attorney for Licensee, Mailing Address	Tamra Domeyer, Associate General Counsel, Exelon Generation Company, LLC, 4300 Winfield Road, Warrenville, IL 60555.
NRC Project Manager, Telephone Number	V. Sreenivas, 301–415–2597.

NextEra Energy Seabrook, LLC; Seabrook Station, Unit No. 1; Rockingham County, NH

Docket No(s)	50–443.
Application date	August 17, 2020.
ADAMS Accession No	ML20230A425.
Location in Application of NSHC	Pages 10–12 of the Enclosure.
Brief Description of Amendment(s)	The proposed amendment would modify the technical specifications in order to resolve non-conservative requirements associated with nuclear heat flux hot channel factor, as reported in Westinghouse Nuclear Safety Advisory Letter (NSAL) 09–5, Revision 1, and NSAL 15–1.
Proposed Determination	NSHC.
Name of Attorney for Licensee, Mailing Address	Debbie Hendell, Managing Attorney—Nuclear, Florida Power & Light Company, 700 Universe Blvd., MS LAW/JB, Juno Beach, FL 33408–0420.
NRC Project Manager, Telephone Number	Justin Poole, 301–415–2048.

Northern States Power Company; Monticello Nuclear Generating Plant; Wright County, MN

Docket No(s)	50–263.
Application date	September 22, 2020.
ADAMS Accession No	ML20267A139.
Location in Application of NSHC	Pages 3–5 of the Enclosure.
Brief Description of Amendment(s)	The amendment would revise the Monticello Nuclear Generating Plant technical specifications to adopt Technical Specifications Task Force (TSTF) Traveler TSTF–582, ''Reactor Pressure Vessel Water Inventory Control (RPV WIC) Enhancements,'' and incorporates variations included in ''T'' traveler TSTF–583, ''TSTF–582 Diesel Generator Variation.''
Proposed Determination	NSHC.
Name of Attorney for Licensee, Mailing Address	Peter M. Glass, Assistant General Counsel, Xcel Energy, 414 Nicollet Mall—401–8, Minneapolis, MN 55401.
NRC Project Manager, Telephone Number	Robert Kuntz, 301–415–3733.

Pacific Gas and Electric Company; Diablo Canyon Power Plant, Units 1 and 2; San Luis Obispo County, CA

Docket No(s)	50–275, 50–323.
Application date	August 31, 2020.
ADAMS Accession No	ML20244A192.
Location in Application of NSHC	Pages 15–17 of the Enclosure.

LICENSE AMENDMENT REQUEST(S)—Continued

Brief Description of Amendment(s)	The proposed amendments would modify Technical Specification 3.2.1, ''Heat Flux Hot Channel Factor (FQ(Z)),'' to implement the methodology in Westinghouse Report WCAP–17661–P–A, Revision 1, ''Improved RAOC [Relaxed Axial Offset Control] and CAOC [Constant Axial Offset Control] FQ Surveillance Technical Specifications.''
Proposed Determination	NSHC.
Name of Attorney for Licensee, Mailing Address	Jennifer Post, Esq., Pacific Gas & Electric Co., 77 Beale Street, Room 3065, Mail Code B30A, San Francisco, CA 94105.
NRC Project Manager, Telephone Number	Samson Lee, 301–415–3168.

PSEG Nuclear LLC; Salem Nuclear Generating Station, Units 1 and 2; Salem County, NJ

Docket No(s)	50–272, 50–311.
Application date	September 17, 2020.
ADAMS Accession No	ML20266G247.
Location in Application of NSHC	Pages 6–7 of the Enclosure.
Brief Description of Amendment(s)	The amendments would replace the current technical specification limit on the reactor coolant system gross specific activity with a new limit on reactor coolant system noble gas specific activity. The noble gas specific activity would be based on a new dose equivalent Xe-133 (DEX) definition that would replace the current E-Bar average disintegration energy definition. The proposed changes are consistent with NRC-approved Technical Specifications Task Force (TSTF) Traveler, TSTF–490, Revision 0, ''Deletion of E-Bar Definition and Revision to RCS [Reactor Coolant System] Specific Activity Tech Spec.''
Proposed Determination	NSHC.
Name of Attorney for Licensee, Mailing Address	Steven Fleischer, PSEG Services Corporation, 80 Park Plaza, T–5, Newark, NJ 07102.
NRC Project Manager, Telephone Number	James Kim, 301–415–4125.

Southern Nuclear Operating Company, Inc.; Edwin I. Hatch Nuclear Plant, Units 1 and 2; Appling County, GA

Docket No(s)	50–321, 50–366.
Application date	August 28, 2020.
ADAMS Accession No	ML20241A240.
Location in Application of NSHC	Pages E–4 to E–7 of the Enclosure.
Brief Description of Amendment(s)	The proposed amendment would revise the Edwin I. Hatch Nuclear Plant technical specifications (TSs) to adopt Technical Specifications Task Force (TSTF) Traveler TSTF–582, ''RPV WIC [Reactor Pressure Vessel Water Inventory Control] Enhancements.'' The TSs related to RPV WIC would be revised to incorporate operating experience and to correct errors and omissions in TSTF–542, Revision 2, ''Reactor Pressure Vessel Water Inventory Control.'' Specifically, the following TSs would be revised: TS 1.1, ''Definitions''; TS 3.3.5.2, ''Reactor Pressure Vessel (RPV) Water Inventory Control Instrumentation''; TS 3.3.8.1, ''Loss of Power (LOP) Instrumentation''; TS 3.5.2, ''Reactor Pressure Vessel (RPV) Water Inventory Control''; TS 3.6.1.3, ''Primary Containment Isolation Valves (PCIVs)''; and TS 3.8.2, ''AC [Alternating Current] Sources—Shutdown''; as well as administrative and editorial changes.
Proposed Determination	NSHC.
Name of Attorney for Licensee, Mailing Address	Millicent Ronnlund, Vice President and General Counsel, Southern Nuclear Operating Co., Inc., P.O. Box 1295, Birmingham, AL 35201–1295.
NRC Project Manager, Telephone Number	John Lamb, 301–415–3100.

Southern Nuclear Operating Company, Inc.; Vogtle Electric Generating Plant, Units 1 and 2; Burke County, GA

Docket No(s)	50–424, 50–425.
Application date	August 17, 2020.
ADAMS Accession No	ML20230A346.
Location in Application of NSHC	Pages E4–4 to E4–7 of Enclosure 4.
Brief Description of Amendment(s)	The proposed amendment would revise the licensing basis as described in the Vogtle Electric Generating Plant Final Safety Analysis Report to allow the use of a risk-informed approach to address safety issues discussed in Generic Safety Issue 191, ''Assessment of Debris Accumulation on Pressurized-Water Reactor Sump Performance.'' In addition, the proposed amendment would add a new Technical Specification (TS) 3.6.7, ''Containment Sump,'' move an existing Surveillance Requirement from TS 3.5.2, ''Reactor Pressure Vessel (RPV) Water Inventory Control,'' to the new TS 3.6.7, and make administrative and editorial changes.
Proposed Determination	NSHC.
Name of Attorney for Licensee, Mailing Address	Millicent Ronnlund, Vice President and General Counsel, Southern Nuclear Operating Co., Inc., P.O. Box 1295, Birmingham, AL 35201–1295.
NRC Project Manager, Telephone Number	John Lamb, 301–415–3100.

STP Nuclear Operating Company; South Texas Project, Units 1 and 2; Matagorda County, TX

Docket No(s)	50–498, 50–499.
Application date	July 30, 2020, as supplemented by letter dated September 22, 2020.
ADAMS Accession No	ML20212L521, ML20266H819.
Location in Application of NSHC	Page 2 of the Enclosure incorporates by reference the NSHC published in the FEDERAL REGISTER on February 22, 2006 (71 FR 9179), and a notice of availability was published on April 21, 2006 (71 FR 20735).
Brief Description of Amendment(s)	The amendments would adopt Technical Specifications Task Force (TSTF) Traveler TSTF–374, ''Revision to TS 5.5.13 and Associated TS [Technical Specification] Bases for Diesel Fuel Oil.'' Specifically, the amendments would revise the TSs by relocating references to specific American Society for Testing and Materials standards for fuel oil testing to the TS Bases and adding alternate criteria to the ''clear and bright'' acceptance test for new fuel oil.
Proposed Determination	NSHC.
Name of Attorney for Licensee, Mailing Address	Kym Harshaw, Vice President and General Counsel, STP Nuclear Operating Company, P.O. Box 289, Wadsworth, TX 77483.
NRC Project Manager, Telephone Number	Dennis Galvin, 301–415–6256.

III. Notice of Issuance of Amendments to Facility Operating Licenses and Combined Licenses

During the period since publication of the NRC's last consolidated notice of issuance, the Commission has issued the following amendments. The Commission has determined for each of these amendments that the application complies with the standards and requirements of the Atomic Energy Act of 1954, as amended (the Act), and the Commission's rules and regulations. The Commission has made appropriate findings as required by the Act and the Commission's rules and regulations in 10 CFR chapter I, which are set forth in the license amendment.

A notice of consideration of issuance of amendment to facility operating license or combined license, as applicable, proposed NSHC determination, and opportunity for a hearing in connection with these actions, was published in the **Federal Register** as indicated in the safety evaluation for each amendment.

Unless otherwise indicated, the Commission has determined that these amendments satisfy the criteria for categorical exclusion in accordance with 10 CFR 51.22. Therefore, pursuant to 10 CFR 51.22(b), no environmental impact statement or environmental assessment need be prepared for these amendments. If the Commission has prepared an environmental assessment under the special circumstances provision in 10 CFR 51.22(b) and has made a determination based on that assessment, it is so indicated in the safety evaluation for the amendment.

For further details with respect to each action, see the amendment and associated documents such as the Commission's letter and safety evaluation, which may be obtained using the ADAMS accession numbers indicated in the table below. The safety evaluation will provide the ADAMS accession numbers for the application for amendment and the **Federal Register** citation for any environmental assessment. All of these items can be accessed as described in the ''Obtaining Information and Submitting Comments'' section of this document.

LICENSE AMENDMENT ISSUANCE(S)

Dominion Nuclear Connecticut, Inc.; Millstone Power Station, Unit No. 3; New London County, CT	
Docket No(s)	50–423.
Amendment Date	October 14, 2020.
ADAMS Accession No	ML20275A000.
Amendment No(s)	277.
Brief Description of Amendment(s)	The amendment revised Millstone Unit No. 3 Technical Specification 6.8.4.g, ''Steam Generator (SG) Program,'' by adding a note to permit a one-time deferral of the Steam Generators A and C inspections from fall 2020 to spring 2022.
Public Comments Received as to Proposed NSHC (Yes/No)	No.
DTE Electric Company; Fermi 2; Monroe County, MI	
Docket No(s)	50–341.
Amendment Date	October 5, 2020.
ADAMS Accession No	ML20233A838.
Amendment No(s)	216.
Brief Description of Amendment(s)	The amendment revised the Fermi 2 Technical Specification (TS) 2.1.1, ''Reactor Core Safety Limits,'' reactor steam dome pressure from 785 pounds per square inch gauge (psig) to 686 psig and TS Table 3.3.6.1–1, ''Primary Containment Isolation Instrumentation,'' Function 1.b, ''Main Steam Line Pressure—Low,'' isolation function allowable value from 736 psig to 801 psig.
Public Comments Received as to Proposed NSHC (Yes/No)	No.
Energy Harbor Nuclear Corp. and Energy Harbor Nuclear Generation LLC; Beaver Valley Power Station, Units 1 and 2; Beaver County, PA	
Docket No(s)	50–334, 50–412.
Amendment Date	September 23, 2020.
ADAMS Accession No	ML20213A731.
Amendment No(s)	305 (Unit 1) and 195 (Unit 2).
Brief Description of Amendment(s)	The amendments revised the Beaver Valley, Units 1 and 2, technical specifications regarding primary and secondary coolant activities, control room emergency ventilation system testing criteria, and permit a one-time change to the control room envelope unfiltered air in-leakages test frequency.
Public Comments Received as to Proposed NSHC (Yes/No)	No.
Entergy Louisiana, LLC, and Entergy Operations, Inc.; River Bend Station, Unit 1; West Feliciana Parish, LA	
Docket No(s)	50–458.
Amendment Date	September 28, 2020.
ADAMS Accession No	ML20244A011.
Amendment No(s)	202.
Brief Description of Amendment(s)	The amendment modified River Bend Station Technical Specification 3.3.5.2, ''Reactor Pressure Vessel (RPV) Water Inventory Control Instrumentation,'' by removing the surveillance frequencies and placing them in a licensee-controlled program through the adoption of NRC-approved Technical Specifications Task Force (TSTF) Traveler TSTF–425, Revision 3, ''Relocate Surveillance Frequencies to Licensee Control—RITSTF [Risk-Informed TSTF] Initiative 5b.''
Public Comments Received as to Proposed NSHC (Yes/No)	No.
Exelon Generation Company, LLC; Clinton Power Station, Unit No. 1; DeWitt County, IL	
Docket No(s)	50–461.
Amendment Date	October 14, 2020.
ADAMS Accession No	ML20266G343.
Amendment No(s)	235.

LICENSE AMENDMENT ISSUANCE(S)—Continued

Brief Description of Amendment(s)	The amendment revised the licensing basis to allow automatic operation of the load tap changer for the emergency reserve auxiliary transformer.
Public Comments Received as to Proposed NSHC (Yes/No)	No.

National Institute of Standard and Technology (NIST), Center for Neutron Research Test Reactor, Montgomery County, Maryland

Docket No(s)	50–184.
Amendment Date	September 21, 2020.
ADAMS Accession No	ML20230A293.
Amendment No(s)	12.
Brief Description of Amendment(s)	This amendment modified the NIST National Bureau of Standards Test Reactor physical security plan under Sections 73.60, ''Additional requirements for physical protection at nonpower reactors,'' and 73.67, ''Licensee fixed site and in-transit requirements for the physical protection of special nuclear material of moderate and low strategic significance,'' of 10 CFR part 73, ''Physical Protection of Plants and Materials.''
Public Comments Received as to Proposed NSHC (Yes/No)	No.

NextEra Energy Point Beach, LLC; Point Beach Nuclear Plant, Unit 1; Manitowoc County, WI

Docket No(s)	50–266.
Amendment Date	September 25, 2020.
ADAMS Accession No	ML20241A058.
Amendment No(s)	267.
Brief Description of Amendment(s)	The amendment modified the Point Beach Nuclear Plant, Unit 1 Renewed Facility Operating License Condition 4.I, ''Containment Building Construction Truss,'' to extend elements of the license condition on a one-time basis. This one-time extension was requested due to unforeseen issues as a result of the Coronavirus Disease 2019 public health emergency.
Public Comments Received as to Proposed NSHC (Yes/No)	No.

PSEG Nuclear LLC; Hope Creek Generating Station; Salem County, NJ

Docket No(s)	50–354.
Amendment Date	September 29, 2020.
ADAMS Accession No	ML20231A632.
Amendment No(s)	224.
Brief Description of Amendment(s)	The amendment added a new license condition to the Hope Creek Renewed Facility Operating License to allow the implementation of the risk-informed categorization and treatment of structures, systems, and components of nuclear power reactors in accordance with 10 CFR 50.69.
Public Comments Received as to Proposed NSHC (Yes/No)	No.

Southern Nuclear Operating Company, Inc.; Edwin I. Hatch Nuclear Plant, Units 1 and 2; Appling County, GA

Docket No(s)	50–321, 50–366.
Amendment Date	September 18, 2020.
ADAMS Accession No	ML20254A057.
Amendment No(s)	307 (Unit 1) and 252 (Unit 2).
Brief Description of Amendment(s)	The amendments revised Technical Specification (TS) 3.8.1, ''AC [Alternating Current] Sources—Operating,'' for Hatch, Units 1 and 2, to provide a one-time extension of the completion time of Required Action B.4 for the Hatch, Unit 1, TS and Required Actions B.4 and C.4 for the Hatch, Unit 2, TS for each Hatch, Unit 1, emergency diesel generator (EDG) and the swing EDG, from 14 days to 19 days. The amendments are risk-informed and follow the guidance in NRC Regulatory Guide (RG) 1.174, ''An Approach for Using Probabilistic Risk Assessment in Risk-Informed Decisions on Plant-Specific Changes to the Licensing Basis,'' Revision 3, and NRC RG 1.177, ''An Approach for Plant-Specific, Risk-Informed Decisionmaking: Technical Specifications,'' Revision 1.
Public Comments Received as to Proposed NSHC (Yes/No)	No.

Southern Nuclear Operating Company, Inc.; Joseph M. Farley Nuclear Plant, Units 1 and 2; Houston County, AL

Docket No(s)	50–348, 50–364.
Amendment Date	October 6, 2020.
ADAMS Accession No	ML20196L929.
Amendment No(s)	229 (Unit 1) and 226 (Unit 2).
Brief Description of Amendment(s)	The amendments modified Technical Specification (TS) 3.7.15, ''Spent Fuel Assembly Storage'' and TS 4.3, ''Fuel Storage,'' and updated the spent fuel pool criticality safety analysis to account for the impact on the spent fuel for a measurement uncertainty recapture power uprate.
Public Comments Received as to Proposed NSHC (Yes/No)	No.

Southern Nuclear Operating Company, Inc.; Joseph M. Farley Nuclear Plant, Units 1 and 2; Houston County, AL

Docket No(s)	50–348, 50–364.
Amendment Date	October 9, 2020.
ADAMS Accession No	ML20121A283.
Amendment No(s)	230 (Unit 1) and 227 (Unit 2).

LICENSE AMENDMENT ISSUANCE(S)—Continued

Brief Description of Amendment(s)	The amendments revised the renewed facility operating licenses to authorize an increase in the maximum licensed rated thermal power from 2,775 megawatts thermal (MWt) to 2,821 MWt, which is an increase of approximately 1.7 percent. The amendments also granted approval to apply WCAP–18124–NP–A, ''Fluence Determination with RAPTOR–M3G and FERRET,'' in a limited application to predict fluence for non-beltline reactor vessel material.
Public Comments Received as to Proposed NSHC (Yes/No)	No.
Southern Nuclear Operating Company, Inc.; Joseph M. Farley Nuclear Plant, Units 1 and 2; Houston County, AL	
Docket No(s)	50–348, 50–364.
Amendment Date	October 13, 2020.
ADAMS Accession No	ML20224A285.
Amendment No(s)	231 (Unit 1) and 228 (Unit 2).
Brief Description of Amendment(s)	The proposed amendments corrected Technical Specification (TS) 3.3.1, ''Reactor Trip System (RTS) Instrumentation,'' by removing a reference to ''RTP'' [rated thermal power]. The proposed amendments also revised TS 3.3.7, ''Control Room Emergency Filtration/Pressurization System (CREFS) Actuation Instrumentation,'' to change the units for the control room ventilation radiation isolation trip setpoint from counts per minute to an equivalent setpoint in units of microcuries per cubic centimeter with a clarifying footnote.
Public Comments Received as to Proposed NSHC (Yes/No)	No.
Southern Nuclear Operating Company, Inc.; Vogtle Electric Generating Plant, Units 3 and 4; Burke County, GA	
Docket No(s)	52–025, 52–026.
Amendment Date	September 24, 2020.
ADAMS Package Accession No	ML20237F487.
Amendment No(s)	184 (Unit 3) and 182 (Unit 4).
Brief Description of Amendment(s)	The amendments authorized changes to the following Combined License Appendix A, Technical Specification (TS): TS 3.3.13, Engineered Safety Feature Actuation System (ESFAS) Main Control Room (MCR) Isolation, Air Supply Initiation, and Electrical Load De-energization applicability is revised to exclude operability of the MCR Air Supply Iodine or Particulate Radiation—High 2 function when the MCR envelope is isolated and the MCR emergency habitability system (VES) is operating; TS 3.3.13 is revised to include Class 1E 24-Hour Battery Charger Input Undervoltage actuation signals for VES actuation and de-energization of the MCR air supply radiation monitoring sample pumps; and TS 3.8.1, DC Sources—Operating, and TS 3.8.2, DC Sources—Shutdown, are revised to include a Surveillance Requirement to verify each MCR air supply radiation monitoring sample pump de-energizes on an actual or simulated actuation signal. The amendments also authorized certain changes to the Updated Final Safety Analysis Report that involve these TS changes.
Public Comments Received as to Proposed NSHC (Yes/No)	No.
STP Nuclear Operating Company; South Texas Project, Units 1 and 2; Matagorda County, TX	
Docket No(s)	50–498, 50–499.
Amendment Date	September 29, 2020.
ADAMS Accession No	ML20253A046.
Amendment No(s)	220 (Unit 1) and 205 (Unit 2).
Brief Description of Amendment(s)	The amendment replaced the technical specifications limit for reactor coolant system (RCS) gross specific activity with a new limit based upon RCS noble gas specific activity.
Public Comments Received as to Proposed NSHC (Yes/No)	No.
Susquehanna Nuclear, LLC and Allegheny Electric Cooperative, Inc.; Susquehanna Steam Electric Station, Units 1 and 2; Luzerne County, PA	
Docket No(s)	50–387, 50–388.
Amendment Date	October 8, 2020.
ADAMS Accession No	ML20199G749.
Amendment No(s)	276 (Unit 1) and 258 (Unit 2).
Brief Description of Amendment(s)	The amendments replaced Technical Specification 5.5.2, ''Primary Coolant Sources Outside Containment,'' and modified the design-basis accident loss-of-coolant accident analysis described in the Susquehanna Updated Final Safety Analysis Report.
Public Comments Received as to Proposed NSHC (Yes/No)	No.

Dated: October 28, 2020.

For the Nuclear Regulatory Commission.

Craig G. Erlanger,

Director, Division of Operating Reactor Licensing, Office of Nuclear Reactor Regulation.

[FR Doc. 2020–24207 Filed 11–2–20; 8:45 am]

BILLING CODE 7590–01–P

NUCLEAR REGULATORY COMMISSION

[NRC–2020–0228]

Applications and Amendments to Facility Operating Licenses and Combined Licenses Involving Proposed No Significant Hazards Considerations and Containing Sensitive Unclassified Non-Safeguards Information and Order Imposing Procedures for Access to Sensitive Unclassified Non-Safeguards Information

AGENCY: Nuclear Regulatory Commission.

ACTION: License amendment request; notice of opportunity to comment, request a hearing, and petition for leave to intervene; order imposing procedures.

SUMMARY: The U.S. Nuclear Regulatory Commission (NRC) received and is considering approval of one amendment request. The amendment request is for Shearon Harris Nuclear Power Plant, Unit 1. For the amendment request, the NRC proposes to determine that it involves no significant hazards consideration (NSHC). Because the amendment request contains sensitive unclassified non-safeguards information (SUNSI), an order imposes procedures to obtain access to SUNSI for contention preparation.

DATES: Comments must be filed by December 3, 2020. A request for a hearing or petitions for leave to intervene must be filed by January 4, 2021. Any potential party as defined in section 2.4 of title 10 of the *Code of Federal Regulations* (10 CFR) who believes access to SUNSI is necessary to respond to this notice must request document access by November 13, 2020.

ADDRESSES: You may submit comments by any of the following methods; however, the NRC encourages electronic comment submission through the Federal Rulemaking website:

- *Federal Rulemaking Website:* Go to *https://www.regulations.gov* and search for Docket ID NRC–2020–0228. Address questions about NRC Docket IDs in *Regulations.gov* to Jennifer Borges; telephone: 301–287–9127; email: *Jennifer.Borges@nrc.gov.* For technical questions, contact the individual listed in the **FOR FURTHER INFORMATION CONTACT** section of this document.
- *Mail comments to:* Office of Administration, Mail Stop: TWFN–7–A60M, U.S. Nuclear Regulatory Commission, Washington, DC 20555–0001, ATTN: Program Management, Announcements and Editing Staff.

For additional direction on obtaining information and submitting comments, see ''Obtaining Information and Submitting Comments'' in the **SUPPLEMENTARY INFORMATION** section of this document.

FOR FURTHER INFORMATION CONTACT: Janet Burkhardt, Office of Nuclear Reactor Regulation, U.S. Nuclear Regulatory Commission, Washington, DC 20555–0001, telephone: 301–415–1384, email: *janet.burkhardt@nrc.gov.*

SUPPLEMENTARY INFORMATION:

I. Obtaining Information and Submitting Comments

A. Obtaining Information

Please refer to Docket ID NRC–2020–0228, facility name, unit number(s), docket number(s), application date, and subject when contacting the NRC about the availability of information for this action. You may obtain publicly available information related to this action by any of the following methods:

- *Federal Rulemaking Website:* Go to *https://www.regulations.gov* and search for Docket ID NRC–2020–0228.
- *NRC's Agencywide Documents Access and Management System (ADAMS):* You may obtain publicly available documents online in the ADAMS Public Documents collection at *https://www.nrc.gov/reading-rm/adams.html.* To begin the search, select ''Begin Web-based ADAMS Search.'' For problems with ADAMS, please contact the NRC's Public Document Room (PDR) reference staff at 1–800–397–4209, 301–415–4737, or by email to *pdr.resource@nrc.gov.* The ADAMS accession number for each document referenced (if it is available in ADAMS) is provided the first time that it is mentioned in this document.
- *Attention:* The PDR, where you may examine and order copies of public documents is currently closed. You may submit your request to the PDR via email at *PDR.Resource@nrc.gov* or call 1–800–397–4209 between 8:00 a.m. and 4:00 p.m. Eastern Standard Time (EST), Monday through Friday, except Federal holidays.

B. Submitting Comments

The NRC encourages electronic comment submission through the Federal Rulemaking Website (*https://www.regulations.gov*). Please include Docket ID NRC–2020–0228, facility name, unit number(s), docket number(s), application date, and subject, in your comment submission.

The NRC cautions you not to include identifying or contact information that you do not want to be publicly disclosed in your comment submission. The NRC will post all comment submissions at *https://www.regulations.gov* as well as enter the comment submissions into ADAMS. The NRC does not routinely edit comment submissions to remove identifying or contact information.

If you are requesting or aggregating comments from other persons for submission to the NRC, then you should inform those persons not to include identifying or contact information that they do not want to be publicly disclosed in their comment submission. Your request should state that the NRC does not routinely edit comment submissions to remove such information before making the comment submissions available to the public or entering the comment into ADAMS.

II. Background

Pursuant to Section 189a.(2) of the Atomic Energy Act of 1954, as amended (the Act), the NRC is publishing this notice. The Act requires the Commission to publish notice of any amendments issued, or proposed to be issued, and grants the Commission the authority to issue and make immediately effective any amendment to an operating license or combined license, as applicable, upon a determination by the Commission that such amendment involves NSHC, notwithstanding the pendency before the Commission of a request for a hearing from any person.

This notice includes a notice of an application for an amendment containing SUNSI.

III. Notice of Consideration of Issuance of Amendments to Facility Operating Licenses and Combined Licenses, Proposed No Significant Hazards Consideration Determination, and Opportunity for a Hearing

The Commission has made a proposed determination that the following amendment request involves NSHC. Under the Commission's regulations in 10 CFR 50.92, this means that operation of the facility in accordance with the proposed amendment would not (1) involve a significant increase in the probability or consequences of an accident previously evaluated, or (2) create the possibility of

a new or different kind of accident from any accident previously evaluated, or (3) involve a significant reduction in a margin of safety. The basis for this proposed determination for the amendment request is shown below.

The Commission is seeking public comments on this proposed determination. Any comments received within 30 days after the date of publication of this notice will be considered in making any final determination.

Normally, the Commission will not issue the amendment until the expiration of 60 days after the date of publication of this notice. The Commission may issue the license amendment before expiration of the 60-day period provided that its final determination is that the amendment involves NSHC. In addition, the Commission may issue the amendment prior to the expiration of the 30-day comment period if circumstances change during the 30-day comment period such that failure to act in a timely way would result, for example, in derating or shutdown of the facility. If the Commission takes action prior to the expiration of either the comment period or the notice period, it will publish a notice of issuance in the **Federal Register**. If the Commission makes a final NSHC determination, any hearing will take place after issuance. The Commission expects that the need to take this action will occur very infrequently.

A. Opportunity To Request a Hearing and Petition for Leave To Intervene

Within 60 days after the date of publication of this notice, any persons (petitioner) whose interest may be affected by this action may file a request for a hearing and petition for leave to intervene (petition) with respect to the action. Petitions shall be filed in accordance with the Commission's ''Agency Rules of Practice and Procedure'' in 10 CFR part 2. Interested persons should consult a current copy of 10 CFR 2.309. The NRC's regulations are accessible electronically from the NRC Library on the NRC's website at *https://www.nrc.gov/reading-rm/doc-collections/cfr/*. If a petition is filed, the Commission or a presiding officer will rule on the petition and, if appropriate, a notice of a hearing will be issued.

As required by 10 CFR 2.309(d), the petition should specifically explain the reasons why intervention should be permitted with particular reference to the following general requirements for standing: (1) The name, address, and telephone number of the petitioner; (2) the nature of the petitioner's right to be made a party to the proceeding; (3) the nature and extent of the petitioner's property, financial, or other interest in the proceeding; and (4) the possible effect of any decision or order which may be entered in the proceeding on the petitioner's interest.

In accordance with 10 CFR 2.309(f), the petition must also set forth the specific contentions that the petitioner seeks to have litigated in the proceeding. Each contention must consist of a specific statement of the issue of law or fact to be raised or controverted. In addition, the petitioner must provide a brief explanation of the bases for the contention and a concise statement of the alleged facts or expert opinion that support the contention and on which the petitioner intends to rely in proving the contention at the hearing. The petitioner must also provide references to the specific sources and documents on which the petitioner intends to rely to support its position on the issue. The petition must include sufficient information to show that a genuine dispute exists with the applicant or licensee on a material issue of law or fact. Contentions must be limited to matters within the scope of the proceeding. The contention must be one that, if proven, would entitle the petitioner to relief. A petitioner who fails to satisfy the requirements at 10 CFR 2.309(f) with respect to at least one contention will not be permitted to participate as a party.

Those permitted to intervene become parties to the proceeding, subject to any limitations in the order granting leave to intervene. Parties have the opportunity to participate fully in the conduct of the hearing with respect to resolution of that party's admitted contentions, including the opportunity to present evidence, consistent with the NRC's regulations, policies, and procedures.

Petitions must be filed no later than 60 days from the date of publication of this notice. Petitions and motions for leave to file new or amended contentions that are filed after the deadline will not be entertained absent a determination by the presiding officer that the filing demonstrates good cause by satisfying the three factors in 10 CFR 2.309(c)(1)(i) through (iii). The petition must be filed in accordance with the filing instructions in the ''Electronic Submissions (E-Filing)'' section of this document.

If a hearing is requested, and the Commission has not made a final determination on the issue of NSHC, the Commission will make a final determination on the issue of NSHC. The final determination will serve to establish when the hearing is held. If the final determination is that the amendment request involves NSHC, the Commission may issue the amendment and make it immediately effective, notwithstanding the request for a hearing. Any hearing would take place after issuance of the amendment. If the final determination is that the amendment request involves a significant hazards consideration, then any hearing held would take place before the issuance of the amendment unless the Commission finds an imminent danger to the health or safety of the public, in which case it will issue an appropriate order or rule under 10 CFR part 2.

A State, local governmental body, Federally recognized Indian Tribe, or agency thereof, may submit a petition to the Commission to participate as a party under 10 CFR 2.309(h)(1). The petition should state the nature and extent of the petitioner's interest in the proceeding. The petition should be submitted to the Commission no later than 60 days from the date of publication of this notice. The petition must be filed in accordance with the filing instructions in the ''Electronic Submissions (E-Filing)'' section of this document, and should meet the requirements for petitions set forth in this section, except that under 10 CFR 2.309(h)(2) a State, local governmental body, or Federally recognized Indian Tribe, or agency thereof does not need to address the standing requirements in 10 CFR 2.309(d) if the facility is located within its boundaries. Alternatively, a State, local governmental body, Federally recognized Indian Tribe, or agency thereof may participate as a non-party under 10 CFR 2.315(c).

If a petition is submitted, any person who is not a party to the proceeding and is not affiliated with or represented by a party may, at the discretion of the presiding officer, be permitted to make a limited appearance pursuant to the provisions of 10 CFR 2.315(a). A person making a limited appearance may make an oral or written statement of his or her position on the issues but may not otherwise participate in the proceeding. A limited appearance may be made at any session of the hearing or at any prehearing conference, subject to the limits and conditions as may be imposed by the presiding officer. Details regarding the opportunity to make a limited appearance will be provided by the presiding officer if such sessions are scheduled.

B. Electronic Submissions (E-Filing)

All documents filed in NRC adjudicatory proceedings, including a request for hearing and petition for

leave to intervene (petition), any motion or other document filed in the proceeding prior to the submission of a request for hearing or petition to intervene, and documents filed by interested governmental entities that request to participate under 10 CFR 2.315(c), must be filed in accordance with the NRC's E-Filing rule (72 FR 49139; August 28, 2007, as amended at 77 FR 46562; August 3, 2012). The E-Filing process requires participants to submit and serve all adjudicatory documents over the internet, or in some cases to mail copies on electronic storage media. Detailed guidance on making electronic submissions may be found in the Guidance for Electronic Submissions to the NRC and on the NRC website at *https://www.nrc.gov/site-help/e-submittals.html.* Participants may not submit paper copies of their filings unless they seek an exemption in accordance with the procedures described below.

To comply with the procedural requirements of E-Filing, at least 10 days prior to the filing deadline, the participant should contact the Office of the Secretary by email at *hearing.docket@nrc.gov*, or by telephone at 301–415–1677, to (1) request a digital identification (ID) certificate, which allows the participant (or its counsel or representative) to digitally sign submissions and access the E-Filing system for any proceeding in which it is participating; and (2) advise the Secretary that the participant will be submitting a petition or other adjudicatory document (even in instances in which the participant, or its counsel or representative, already holds an NRC-issued digital ID certificate). Based upon this information, the Secretary will establish an electronic docket for the hearing in this proceeding if the Secretary has not already established an electronic docket.

Information about applying for a digital ID certificate is available on the NRC's public website at *https://www.nrc.gov/site-help/e-submittals/getting-started.html.* Once a participant has obtained a digital ID certificate and a docket has been created, the participant can then submit adjudicatory documents. Submissions must be in Portable Document Format (PDF). Additional guidance on PDF submissions is available on the NRC's public website at *https://www.nrc.gov/site-help/electronic-sub-ref-mat.html.* A filing is considered complete at the time the document is submitted through the NRC's E-Filing system. To be timely, an electronic filing must be submitted to the E-Filing system no later than 11:59 p.m. EST on the due date. Upon receipt of a transmission, the E-Filing system time-stamps the document and sends the submitter an email notice confirming receipt of the document. The E-Filing system also distributes an email notice that provides access to the document to the NRC's Office of the General Counsel and any others who have advised the Office of the Secretary that they wish to participate in the proceeding, so that the filer need not serve the document on those participants separately. Therefore, applicants and other participants (or their counsel or representative) must apply for and receive a digital ID certificate before adjudicatory documents are filed so that they can obtain access to the documents via the E-Filing system.

A person filing electronically using the NRC's adjudicatory E-Filing system may seek assistance by contacting the NRC's Electronic Filing Help Desk through the ''Contact Us'' link located on the NRC's public website at *https://www.nrc.gov/site-help/e-submittals.html,* by email to *MSHD.Resource@nrc.gov*, or by a toll-free call at 1–866–672–7640. The NRC Electronic Filing Help Desk is available between 9 a.m. and 6 p.m., EST, Monday through Friday, excluding government holidays.

Participants who believe that they have a good cause for not submitting documents electronically must file an exemption request, in accordance with 10 CFR 2.302(g), with their initial paper filing stating why there is good cause for not filing electronically and requesting authorization to continue to submit documents in paper format. Such filings must be submitted by: (1) First class mail addressed to the Office of the Secretary of the Commission, U.S. Nuclear Regulatory Commission, Washington, DC 20555–0001, Attention: Rulemaking and Adjudications Staff; or (2) courier, express mail, or expedited delivery service to the Office of the Secretary, 11555 Rockville Pike, Rockville, Maryland 20852, Attention: Rulemaking and Adjudications Staff. Participants filing adjudicatory documents in this manner are responsible for serving the document on all other participants. Filing is considered complete by first-class mail as of the time of deposit in the mail, or by courier, express mail, or expedited delivery service upon depositing the document with the provider of the service. A presiding officer, having granted an exemption request from using E-Filing, may require a participant or party to use E-Filing if the presiding officer subsequently determines that the reason for granting the exemption from use of E-Filing no longer exists.

Documents submitted in adjudicatory proceedings will appear in the NRC's electronic hearing docket, which is available to the public at *https://adams.nrc.gov/ehd,* unless excluded pursuant to an order of the Commission or the presiding officer. If you do not have an NRC-issued digital ID certificate as described above, click ''cancel'' when the link requests certificates and you will be automatically directed to the NRC's electronic hearing dockets where you will be able to access any publicly available documents in a particular hearing docket. Participants are requested not to include personal privacy information, such as social security numbers, home addresses, or personal phone numbers in their filings, unless an NRC regulation or other law requires submission of such information. For example, in some instances, individuals provide home addresses in order to demonstrate proximity to a facility or site. With respect to copyrighted works, except for limited excerpts that serve the purpose of the adjudicatory filings and would constitute a Fair Use application, participants are requested not to include copyrighted materials in their submission.

The table below provides the plant name, docket number, date of application, ADAMS accession number, and location in the application of the licensee's proposed NSHC determination. For further details with respect to this license amendment application, see the application for amendment, which is available for public inspection in ADAMS. For additional direction on accessing information related to this document, see the ''Obtaining Information and Submitting Comments'' section of this document.

Duke Energy Progress, LLC; Shearon Harris Nuclear Power Plant, Unit 1; Wake and Chatham Counties, NC

Docket No(s)	50–400.
Application Date	March 6, 2020, as supplemented by letters dated April 23 and June 22, 2020.
ADAMS Accession No(s)	ML20066L112, ML20114E131, and ML20174A640.
Location in Application of NSHC	Pages 19–21 of Enclosure 1.
Brief Description of Amendment(s)	The amendment would revise Technical Specification (TS) ¾.2.5, ''DNB [Departure-from-Nucleate-Boiling] Parameters,'' and TS 6.9.1.6, ''Core Operating Limits Report,'' in support of analysis development for Shearon Harris Nuclear Power Plant, Unit 1, Cycle 24 and the introduction of reload batches of Framatome, Inc. (Framatome) GAIA fuel assemblies. The amendment would also revise TS ¾.2.5 to reflect a lower minimum reactor coolant system (RCS) flow rate and would revise TS 6.9.1.6.2 to reflect incorporation of the Framatome topical report EMF–2103(P)(A), Revision 3, ''Realistic Large Break LOCA [Loss-of-Coolant Accident] Methodology for Pressurized Water Reactors.'' The amendment would also revise TS 6.9.1.6.2 to reflect the removal of analytical methods no longer applicable for the determination of the core operating limits. Additionally, as part of the license amendment request, the licensee provided an updated Small Break LOCA analysis reflecting the proposed lower minimum RCS flow rate and featuring Framatome GAIA fuel.
Proposed Determination	NSHC.
Name of Attorney for Licensee, Mailing Address	David Cummings, Associate General Counsel, Mail Code DEC45, 550 South Tryon Street, Charlotte, NC 28202.
NRC Project Manager, Telephone Number	Michael Mahoney, 301–415–3867.

Order Imposing Procedures for Access to Sensitive Unclassified Non-Safeguards Information for Contention Preparation

Duke Energy Progress, LLC; Docket No. 50–400; Shearon Harris Nuclear Power Plant, Unit 1; Wake and Chatham Counties, NC

A. This Order contains instructions regarding how potential parties to this proceeding may request access to documents containing SUNSI.

B. Within 10 days after publication of this notice of hearing and opportunity to petition for leave to intervene, any potential party who believes access to SUNSI is necessary to respond to this notice may request access to SUNSI. A ''potential party'' is any person who intends to participate as a party by demonstrating standing and filing an admissible contention under 10 CFR 2.309. Requests for access to SUNSI submitted later than 10 days after publication of this notice will not be considered absent a showing of good cause for the late filing, addressing why the request could not have been filed earlier.

C. The requestor shall submit a letter requesting permission to access SUNSI to the Office of the Secretary, U.S. Nuclear Regulatory Commission, Washington, DC 20555–0001, Attention: Rulemakings and Adjudications Staff, and provide a copy to the Deputy General Counsel for Hearings and Administration, Office of the General Counsel, U.S. Nuclear Regulatory Commission, Washington, DC 20555–0001. The expedited delivery or courier mail address for both offices is: U.S. Nuclear Regulatory Commission, 11555 Rockville Pike, Rockville, Maryland 20852. The email address for the Office of the Secretary and the Office of the General Counsel are *Hearing.Docket@nrc.gov* and *RidsOgcMailCenter.Resource@nrc.gov*, respectively.[1] The request must include the following information:

(1) A description of the licensing action with a citation to this **Federal Register** notice;

(2) The name and address of the potential party and a description of the potential party's particularized interest that could be harmed by the action identified in C.(1); and

(3) The identity of the individual or entity requesting access to SUNSI and the requestor's basis for the need for the information in order to meaningfully participate in this adjudicatory proceeding. In particular, the request must explain why publicly available versions of the information requested would not be sufficient to provide the basis and specificity for a proffered contention.

D. Based on an evaluation of the information submitted under paragraph C.(3) the NRC staff will determine within 10 days of receipt of the request whether:

(1) There is a reasonable basis to believe the petitioner is likely to establish standing to participate in this NRC proceeding; and

(2) The requestor has established a legitimate need for access to SUNSI.

E. If the NRC staff determines that the requestor satisfies both D.(1) and D.(2) above, the NRC staff will notify the requestor in writing that access to SUNSI has been granted. The written notification will contain instructions on how the requestor may obtain copies of the requested documents, and any other conditions that may apply to access to those documents. These conditions may include, but are not limited to, the signing of a Non-Disclosure Agreement or Affidavit, or Protective Order[2] setting forth terms and conditions to prevent the unauthorized or inadvertent disclosure of SUNSI by each individual who will be granted access to SUNSI.

F. Filing of Contentions. Any contentions in these proceedings that are based upon the information received as a result of the request made for SUNSI must be filed by the requestor no later than 25 days after receipt of (or access to) that information. However, if more than 25 days remain between the petitioner's receipt of (or access to) the information and the deadline for filing all other contentions (as established in the notice of hearing or opportunity for hearing), the petitioner may file its SUNSI contentions by that later deadline.

G. Review of Denials of Access.

(1) If the request for access to SUNSI is denied by the NRC staff after a determination on standing and requisite need, the NRC staff shall immediately notify the requestor in writing, briefly stating the reason or reasons for the denial.

(2) The requestor may challenge the NRC staff's adverse determination by filing a challenge within 5 days of receipt of that determination with: (a) The presiding officer designated in this proceeding; (b) if no presiding officer has been appointed, the Chief

[1] While a request for hearing or petition to intervene in this proceeding must comply with the filing requirements of the NRC's ''E-Filing Rule,'' the initial request to access SUNSI under these procedures should be submitted as described in this paragraph.

[2] Any motion for Protective Order or draft Non-Disclosure Affidavit or Agreement for SUNSI must be filed with the presiding officer or the Chief Administrative Judge if the presiding officer has not yet been designated, within 30 days of the deadline for the receipt of the written access request.

Administrative Judge, or if he or she is unavailable, another administrative judge, or an Administrative Law Judge with jurisdiction pursuant to 10 CFR 2.318(a); or (c) if another officer has been designated to rule on information access issues, with that officer.

(3) Further appeals of decisions under this paragraph must be made pursuant to 10 CFR 2.311.

H. Review of Grants of Access. A party other than the requestor may challenge an NRC staff determination granting access to SUNSI whose release would harm that party's interest independent of the proceeding. Such a challenge must be filed within 5 days of the notification by the NRC staff of its grant of access and must be filed with: (a) The presiding officer designated in this proceeding; (b) if no presiding officer has been appointed, the Chief Administrative Judge, or if he or she is unavailable, another administrative judge, or an Administrative Law Judge with jurisdiction pursuant to 10 CFR 2.318(a); or (c) if another officer has been designated to rule on information access issues, with that officer.

If challenges to the NRC staff determinations are filed, these procedures give way to the normal process for litigating disputes concerning access to information. The availability of interlocutory review by the Commission of orders ruling on such NRC staff determinations (whether granting or denying access) is governed by 10 CFR 2.311.[3]

I. The Commission expects that the NRC staff and presiding officers (and any other reviewing officers) will consider and resolve requests for access to SUNSI, and motions for protective orders, in a timely fashion in order to minimize any unnecessary delays in identifying those petitioners who have standing and who have propounded contentions meeting the specificity and basis requirements in 10 CFR part 2. The attachment to this Order summarizes the general target schedule for processing and resolving requests under these procedures.

It is so ordered.

Dated: October 19, 2020.

For the Nuclear Regulatory Commission.

Annette L. Vietti-Cook,

Secretary of the Commission.

ATTACHMENT 1—GENERAL TARGET SCHEDULE FOR PROCESSING AND RESOLVING REQUESTS FOR ACCESS TO SENSITIVE UNCLASSIFIED NON-SAFEGUARDS INFORMATION IN THIS PROCEEDING

Day	Event/Activity
0	Publication of **Federal Register** notice of hearing and opportunity to petition for leave to intervene, including order with instructions for access requests.
10	Deadline for submitting requests for access to Sensitive Unclassified Non-Safeguards Information (SUNSI) with information: Supporting the standing of a potential party identified by name and address; describing the need for the information in order for the potential party to participate meaningfully in an adjudicatory proceeding.
60	Deadline for submitting petition for intervention containing: (i) Demonstration of standing; and (ii) all contentions whose formulation does not require access to SUNSI (+25 Answers to petition for intervention; +7 petitioner/requestor reply).
20	U.S. Nuclear Regulatory Commission (NRC) staff informs the requestor of the staff's determination whether the request for access provides a reasonable basis to believe standing can be established and shows need for SUNSI. (NRC staff also informs any party to the proceeding whose interest independent of the proceeding would be harmed by the release of the information.) If NRC staff makes the finding of need for SUNSI and likelihood of standing, NRC staff begins document processing (preparation of redactions or review of redacted documents).
25	If NRC staff finds no "need" or no likelihood of standing, the deadline for petitioner/requestor to file a motion seeking a ruling to reverse the NRC staff's denial of access; NRC staff files copy of access determination with the presiding officer (or Chief Administrative Judge or other designated officer, as appropriate). If NRC staff finds "need" for SUNSI, the deadline for any party to the proceeding whose interest independent of the proceeding would be harmed by the release of the information to file a motion seeking a ruling to reverse the NRC staff's grant of access.
30	Deadline for NRC staff reply to motions to reverse NRC staff determination(s).
40	(Receipt +30) If NRC staff finds standing and need for SUNSI, deadline for NRC staff to complete information processing and file motion for Protective Order and draft Non-Disclosure Affidavit. Deadline for applicant/licensee to file Non-Disclosure Agreement for SUNSI.
A	If access granted: Issuance of presiding officer or other designated officer decision on motion for protective order for access to sensitive information (including schedule for providing access and submission of contentions) or decision reversing a final adverse determination by the NRC staff.
A + 3	Deadline for filing executed Non-Disclosure Affidavits. Access provided to SUNSI consistent with decision issuing the protective order.
A + 28	Deadline for submission of contentions whose development depends upon access to SUNSI. However, if more than 25 days remain between the petitioner's receipt of (or access to) the information and the deadline for filing all other contentions (as established in the notice of opportunity to request a hearing and petition for leave to intervene), the petitioner may file its SUNSI contentions by that later deadline.
A + 53	(Contention receipt +25) Answers to contentions whose development depends upon access to SUNSI.
A + 60	(Answer receipt +7) Petitioner/Intervenor reply to answers.
>A + 60	Decision on contention admission.

[FR Doc. 2020–23425 Filed 11–2–20; 8:45 am]

BILLING CODE 7590–01–P

[3] Requestors should note that the filing requirements of the NRC's E-Filing Rule (72 FR 49139; August 28, 2007, as amended at 77 FR 46562; August 3, 2012) apply to appeals of NRC staff determinations (because they must be served on a presiding officer or the Commission, as applicable), but not to the initial SUNSI request submitted to the NRC staff under these procedures.

NUCLEAR REGULATORY COMMISSION

[NRC–2020–0001]

Sunshine Act Meetings

TIME AND DATE: Weeks of November 2, 9, 16, 23, 30, December 7, 2020.

PLACE: Commissioners' Conference Room, 11555 Rockville Pike, Rockville, Maryland.

STATUS: Public.

Week of November 2, 2020

Thursday, November 5, 2020

9:00 a.m. Strategic Programmatic Overview of the Decommissioning and Low-Level Waste and Nuclear Materials Users Business Lines (Public Meeting) (Contact: Celimar Valentin-Rodriguez: 301–415–7124)

Additional Information: Due to COVID–19, there will be no physical public attendance. The public is invited to attend the Commission's meeting live by webcast at the web address—*https://www.nrc.gov/.*

Week of November 9, 2020—Tentative

There are no meetings scheduled for the week of November 9, 2020.

Week of November 16, 2020—Tentative

Wednesday, November 18, 2020

10:00 a.m. Meeting with the Advisory Committee on the Medical Uses of Isotopes (Public Meeting) (Contact: Kellee Jamerson: 301–415–7408)

Additional Information: Due to COVID–19, there will be no physical public attendance. The public is invited to attend the Commission's meeting live by webcast at the Web address—*https://www.nrc.gov/.*

Week of November 23, 2020—Tentative

There are no meetings scheduled for the week of November 23, 2020.

Week of November 30, 2020—Tentative

Friday, December 4, 2020

10:00 a.m. Meeting with Advisory Committee on Reactor Safeguards (Public Meeting) (Contact: Larry Burkhart: 301–287–3775)

Additional Information: Due to COVID–19, there will be no physical public attendance. The public is invited to attend the Commission's meeting live by webcast at the Web address—*https://www.nrc.gov/.*

Week of December 7, 2020—Tentative

There are no meetings scheduled for the week of December 7, 2020.

CONTACT PERSON FOR MORE INFORMATION: For more information or to verify the status of meetings, contact Denise McGovern at 301–415–0681 or via email at *Denise.McGovern@nrc.gov.* The schedule for Commission meetings is subject to change on short notice.

The NRC Commission Meeting Schedule can be found on the internet at: *https://www.nrc.gov/public-involve/public-meetings/schedule.html.*

The NRC provides reasonable accommodation to individuals with disabilities where appropriate. If you need a reasonable accommodation to participate in these public meetings or need this meeting notice or the transcript or other information from the public meetings in another format (*e.g.,* braille, large print), please notify Anne Silk, NRC Disability Program Specialist, at 301–287–0745, by videophone at 240–428–3217, or by email at *Anne.Silk@nrc.gov.* Determinations on requests for reasonable accommodation will be made on a case-by-case basis.

Members of the public may request to receive this information electronically. If you would like to be added to the distribution, please contact the Nuclear Regulatory Commission, Office of the Secretary, Washington, DC 20555 (301–415–1969), or by email at *Tyesha.Bush@nrc.gov* or *Marcia.Pringle@nrc.gov.*

The NRC is holding the meetings under the authority of the Government in the Sunshine Act, 5 U.S.C. 552b.

Dated: October 29, 2020.

For the Nuclear Regulatory Commission.

Denise L. McGovern,

Policy Coordinator, Office of the Secretary.

[FR Doc. 2020–24384 Filed 10–30–20; 11:15 am]

BILLING CODE 7590–01–P

NUCLEAR REGULATORY COMMISSION

[Docket Nos. 50–338 and 50–339; NRC–2020–0234]

Notice of Intent To Conduct Scoping Process and Prepare Environmental Impact Statement Virginia Electric and Power Company; North Anna Power Station, Unit Nos. 1 and 2; Correction

AGENCY: Nuclear Regulatory Commission.

ACTION: Intent to conduct scoping process and prepare environmental impact statement; public scoping meeting and request for comment; correction.

SUMMARY: The U.S. Nuclear Regulatory Commission (NRC) is correcting a notice that was published in the **Federal Register** on October 23, 2020, informing the public of the NRC's intention to conduct environmental scoping and prepare an environmental impact statement (EIS) related to Virginia Electric and Power Company's (Dominion) subsequent license renewal application for North Anna Power Station, Unit Nos. 1 and 2 (North Anna), and to provide the public an opportunity to participate in the environmental scoping process. This action is necessary to correct the public scoping webinar participant's passcode.

DATES: The NRC will hold a public scoping meeting as an online webinar on November 4, 2020, from 1:00 p.m. to 3:00 p.m. Eastern Standard Time (EST). Submit comments on the scope of the EIS by November 23, 2020. Comments received after November 23, 2020, will be considered if it is practical to do so, but assurance of consideration cannot be given to comments received after this date.

ADDRESSES: You may submit comments by any of the following methods (unless this document describes a different method for submitting comments on a specific subject); however, the NRC encourages electronic comment submission through the Federal Rulemaking website:

- *Federal Rulemaking website:* Go to *https://www.nrc.gov* and search for Docket ID NRC–2020–0234. Address questions about Docket IDs in *Regulations.gov* to Jennifer Borges; telephone: 301–287–9127; email: *Jennifer.Borges@nrc.gov.* For technical questions, contact the individual listed in the **FOR FURTHER INFORMATION CONTACT** section of this document.
- *Mail comments to:* Office of Administration, Mail Stop TWFN7A60M, U.S. Nuclear Regulatory Commission, Washington, DC 20555–0001. For additional direction on obtaining information and submitting comments, see ''Obtaining Information and Submitting Comments'' in the **SUPPLEMENTARY INFORMATION** section of this document.

FOR FURTHER INFORMATION CONTACT: Tam Tran, Office of Nuclear Material Safety and Safeguards, U.S. Nuclear Regulatory Commission, Washington, DC 20555–0001; telephone: 301–415–3617, email: *Tam.Tran@nrc.gov.*

SUPPLEMENTARY INFORMATION:

I. Obtaining Information and Submitting Comments

A. Obtaining Information

Please refer to Docket ID NRC–2020–0234 when contacting the NRC about the availability of information regarding this document. You may obtain publicly available information related to this document by any of the following methods:

- *Federal Rulemaking website:* Go to *https://regulations.gov* and search for Docket ID NRC–2020–0234.
- *NRC's Agencywide Documents Access and Management System (ADAMS):* You may obtain publicly available documents online in the NRC Library at *https://www.nrc.gov/reading-rm/adams.html.* To begin the search, select ''Begin Web-based ADAMS Search.'' For problems with ADAMS, please contact the NRC's Public Document Room (PDR) reference staff at 1–800–397–4209, 301–415–4737, or by email to *pdr.resource@nrc.gov.* The ADAMS accession number for each document referenced in this document (if that document is available in ADAMS) is provided the first time that a document is referenced. Dominion's application for subsequent renewal of the North Anna licenses can be found in (ADAMS Package Accession No. ML20246G703).
- *Attention:* The PDR, where you may examine and order copies of public documents is currently closed. You may submit your request to the PDR via email at *PDR.Resource@nrc.gov* or call 1–800–397–4209 between 8:00 a.m. and 4:00 p.m. (EST), Monday through Friday, except Federal holidays.

B. Submitting Comments

The NRC encourages electronic comment submission through the Federal Rulemaking website (*https://www.regulations.gov*). Please include Docket ID NRC–2020–0234 in your comment submission in order to ensure that the NRC is able to make your comment submission available to the public in this docket.

The NRC cautions you not to include identifying or contact information that you do not want to be publicly disclosed in your comment submission. The NRC will post all comment submissions at *https://www.regulations.gov* as well as enter the comment submissions into ADAMS. The NRC does not routinely edit comment submissions to remove identifying or contact information.

If you are requesting or aggregating comments from other persons for submission to the NRC, then you should inform those persons not to include identifying or contact information that they do not want to be publicly disclosed in their comment submission. Your request should state that the NRC does not routinely edit comment submissions to remove such information before making the comment submissions available to the public or entering the comment submissions into ADAMS.

II. Correction

In the **Federal Register** (FR) on October 23, 2020 (85 FR 67572), in FR Doc. 2020–23463, on page 67574, under section IV. Public Scoping Meeting, correct the language under the ''Location'' column of the public scoping meeting table to read ''Participant Passcode: 5257816#''.

III. Public Scoping Meeting

In accordance with section 51.26(b) of title 10 of the *Code of Federal Regulations,* the scoping process for an EIS may include a public scoping meeting to help identify significant issues related to a proposed activity and to determine the scope of issues to be addressed in an EIS.

The NRC is announcing that it will hold a public scoping meeting as an online webinar, for the North Anna subsequent license renewal supplement to the NRC's NUREG–1437, ''Generic Environmental Impact Statement for License Renewal of Nuclear Plants'' (GEIS). The webinar will offer a telephone line for members of the public to provide comments. A court reporter will record and transcribe all comments received during the webinar. To be considered, comments must be provided either at the transcribed public meeting or in writing, as discussed in the **ADDRESSES** section of this document. The date and time for the public scoping webinar are as follows:

Meeting	Date	Time	Location
Public Scoping Webinar	11/4/2020	1:00 p.m. to 3:00 p.m. (EST) ..	Webinar Information: *https://usnrc.webex.com.* Event number: 199 753 7173. Telephone Bridge Line: 1–800–369–2157. Participant Passcode: 5257816#.

The public scoping meeting will include: (1) An overview by the NRC staff of the environmental and safety review processes, the proposed scope of the supplement to the GEIS, and the proposed review schedule; and (2) the opportunity for interested government agencies, organizations, and individuals to submit comments or suggestions on environmental issues or the proposed scope of the North Anna subsequent license renewal supplement to the GEIS.

Persons interested in attending this online webinar should monitor the NRC's Public Meeting Schedule at *https://www.nrc.gov/pmns/mtg* for additional information, agendas for the meeting, and access information for the webinar. Participants should register in advance of the meeting by visiting the website *https://usnrc.webex.com* and using the event number provided in this notice. A confirmation email will be generated providing additional details and a link to the webinar. Please contact Tam Tran no later than November 2, 2020, if accommodations or special equipment is needed to attend or to provide comments, so that the NRC staff can determine whether the request can be accommodated.

Participation in the scoping process for the North Anna subsequent license renewal supplement to the GEIS does not entitle participants to become parties to the proceeding to which the supplement to the GEIS relates. Matters related to participation in any hearing are outside the scope of matters to be discussed at this public meeting.

Dated: October 29, 2020.

For the Nuclear Regulatory Commission.

Robert B. Elliott,

Chief, Environmental Review License Renewal Branch, Division of Rulemaking, Environment, and Financial Support, Office of Nuclear Material Safety and Safeguards.

[FR Doc. 2020–24363 Filed 11–2–20; 8:45 am]

BILLING CODE 7590–01–P

POSTAL SERVICE

Board of Governors; Sunshine Act Meeting

DATE AND TIME: Thursday, November 12, 2020, at 10:15 a.m.; and Friday, November 13, 2020, at 9:00 a.m.

PLACE: Washington, DC, at U.S. Postal Service Headquarters, 475 L'Enfant Plaza SW, in the Benjamin Franklin Room.

STATUS: Thursday, November 12, 2020, at 10:15 a.m.—Closed; Friday, November 13, 2020, at 9:00 a.m.—Open.

MATTERS TO BE CONSIDERED:

Thursday, November 12, 2020, at 10:15 a.m. (Closed)

1. Strategic Issues.
2. Financial and Operational Matters.
3. Compensation and Personnel Matters.
4. Administrative Items.

Friday, November 13, 2020, at 9:00 a.m. (Open)

1. Remarks of the Chairman of the Board of Governors.
2. Remarks of the Postmaster General and CEO.
3. Approval of Minutes of Previous Meetings.
4. Committee Reports.
5. Financial Matters, including FY2020 10K and Financial Statements, and Annual Reports to Congress.
6. FY2021 Integrated Financial Plan and Financing Resolution.
7. FY2022 Congressional Reimbursement Request.
8. Quarterly Service Performance Report.
9. Bylaws.
10. Approval of Tentative Agenda for February Meetings.
11. Board Leadership.

CONTACT PERSON FOR MORE INFORMATION: Katherine Sigler, acting Secretary of the Board, U.S. Postal Service, 475 L'Enfant Plaza SW, Washington, DC 20260–1000. Telephone: (202) 268–4800.

Katherine Sigler,

Acting Secretary.

[FR Doc. 2020–24492 Filed 10–30–20; 4:15 pm]

BILLING CODE 7710–12–P

SECURITIES AND EXCHANGE COMMISSION

[Release No. 34–90279; File No. SR–CBOE–2020–103]

Self-Regulatory Organizations; Cboe Exchange, Inc.; Notice of Filing and Immediate Effectiveness of a Proposed Rule Change Relating To Extend the Operation of Its Flexible Exchange Options (''FLEX Options'') Pilot Program Regarding Permissible Exercise Settlement Values for FLEX Index Options

October 28, 2020.

Pursuant to Section 19(b)(1) of the Securities Exchange Act of 1934 (the ''Act''),[1] and Rule 19b–4 thereunder,[2] notice is hereby given that on October 16, 2020, Cboe Exchange, Inc. (the ''Exchange'' or ''Cboe Options'') filed with the Securities and Exchange Commission (the ''Commission'') the proposed rule change as described in Items I and II below, which Items have been prepared by the Exchange. The Exchange filed the proposal as a ''non-controversial'' proposed rule change pursuant to Section 19(b)(3)(A)(iii) of the Act[3] and Rule 19b–4(f)(6) thereunder.[4] The Commission is publishing this notice to solicit comments on the proposed rule change from interested persons.

I. Self-Regulatory Organization's Statement of the Terms of Substance of the Proposed Rule Change

Cboe Exchange, Inc. (the ''Exchange'' or ''Cboe Options'') proposes to extend the operation of its Flexible Exchange Options (''FLEX Options'') pilot program regarding permissible exercise settlement values for FLEX Index Options. The text of the proposed rule change is provided below.

(additions are *italicized;* deletions are [bracketed])

* * * * *

Rules of Cboe Exchange, Inc.

* * * * *

Rule 4.21. Series of FLEX Options

(a) No change.

(b) *Terms.* When submitting a FLEX Order for a FLEX Option series to the System, the submitting FLEX Trader must include one of each of the following terms in the FLEX Order (all other terms of a FLEX Option series are the same as those that apply to non-FLEX Options), which terms constitute the FLEX Option series:

(1)–(4) No change.

(5) settlement type:

(A) No change.

(B) *FLEX Index Options.* FLEX Index Options are settled in U.S. dollars, and may be:

(i) No change.

(ii) p.m.-settled (with exercise settlement value determined by reference to the reported level of the index derived from the reported closing prices of the component securities), except for a FLEX Index Option that expires on any business day that falls on or within two business days of a third Friday-of-the-month expiration day for a non-FLEX Option (other than a QIX option) may only be a.m.-settled; however, for a pilot period ending the earlier of [November 2, 2020] *May 3, 2021* or the date on which the pilot program is approved on a permanent basis, a FLEX Index Option with an expiration date on the third-Friday of the month may be p.m.-settled;

(iii)–(iv) No change.

* * * * *

The text of the proposed rule change is also available on the Exchange's website (*http://www.cboe.com/AboutCBOE/CBOELegalRegulatoryHome.aspx*), at the Exchange's Office of the Secretary, and at the Commission's Public Reference Room.

II. Self-Regulatory Organization's Statement of the Purpose of, and Statutory Basis for, the Proposed Rule Change

In its filing with the Commission, the Exchange included statements concerning the purpose of and basis for the proposed rule change and discussed any comments it received on the proposed rule change. The text of these statements may be examined at the places specified in Item IV below. The Exchange has prepared summaries, set forth in sections A, B, and C below, of the most significant aspects of such statements.

A. Self-Regulatory Organization's Statement of the Purpose of, and Statutory Basis for, the Proposed Rule Change

1. Purpose

On January 28, 2010, the Securities and Exchange Commission (the ''Commission'') approved a Cboe Options rule change that, among other things, established a pilot program regarding permissible exercise settlement values for FLEX Index Options.[5] The Exchange has extended the pilot period numerous times, which is currently set to expire on the earlier of November 2, 2020 or the date on which the pilot program is approved on a permanent basis.[6] The purpose of this

[1] 15 U.S.C. 78s(b)(1).

[2] 17 CFR 240.19b–4.

[3] 15 U.S.C. 78s(b)(3)(A)(iii).

[4] 17 CFR 240.19b–4(f)(6).

[5] Securities Exchange Act Release No. 61439 (January 28, 2010), 75 FR 5831 (February 4, 2010) (SR–CBOE–2009–087) (''Approval Order''). The initial pilot period was set to expire on March 28, 2011, which date was added to the rules in 2010. *See* Securities Exchange Act Release No. 61676 (March 9, 2010), 75 FR 13191 (March 18, 2010) (SR–CBOE–2010–026).

[6] *See* Securities Exchange Act Release Nos. 64110 (March 23, 2011), 76 FR 17463 (March 29, 2011) (SR–CBOE–2011–024) (extending the pilot program through the earlier of March 30, 2012 or the date on which the pilot program is approved on the permanent basis); 66701 (March 30, 2012), 77 FR

Continued

rule change filing is to extend the pilot program through the earlier of May 3, 2021 or the date on which the pilot program is approved on a permanent basis. This filing simply seeks to extend the operation of the pilot program and does not propose any substantive changes to the pilot program.

Under Rule 4.21(b), *Series of FLEX Options* (regarding terms of a FLEX Option),[7] a FLEX Option may expire on any business day (specified to day, month and year) no more than 15 years from the date on which a FLEX Trader submits a FLEX Order to the System.[8] FLEX Index Options are settled in U.S. dollars, and may be a.m.-settled (with exercise settlement value determined by reference to the reported level of the index derived from the reported opening prices of the component securities) or p.m.-settled (with exercise settlement value determined by reference to the reported level of the index derived from the reported closing prices of the component securities).[9] Specifically, a FLEX Index Option that expires on, or within two business days of, a third Friday-of-the-month expiration day for a non-FLEX Option (other than a QIX option), may only be a.m. settled.[10] However, under the exercise settlement values pilot, this restriction on p.m.-settled FLEX Index Options was eliminated.[11] As stated, the exercise settlement values pilot is currently set to expire on the earlier of November 2, 2020 or the date on which the pilot program is approved on a permanent basis.

Cboe Options is proposing to extend the pilot program through the earlier of May 3, 2021 or the date on which the pilot program is approved on a permanent basis. Cboe Options believes the pilot program has been successful and well received by its Trading Permit Holders and the investing public for the period that it has been in operation as a pilot. In support of the proposed extension of the pilot program, and as required by the pilot program's Approval Order, the Exchange has submitted to the Commission pilot program reports regarding the pilot, which detail the Exchange's experience with the program. Specifically, the Exchange provided the Commission with annual reports analyzing volume and open interest for each broad-based FLEX Index Options class overlying a third Friday-of-the-month expiration day, p.m.-settled FLEX Index Options series.[12] The annual reports also contained information and analysis of FLEX Index Options trading patterns. The Exchange also provided the Commission, on a periodic basis, interim reports of volume and open interest. In providing the pilot reports to the Commission, the Exchange has previously requested confidential treatment of the pilot reports under the Freedom of Information Act (''FOIA'').[13]

The Exchange believes there is sufficient investor interest and demand in the pilot program to warrant its extension. The Exchange believes that, for the period that the pilot has been in operation, the program has provided investors with additional means of managing their risk exposures and carrying out their investment objectives. Furthermore, the Exchange believes that it has not experienced any adverse market effects with respect to the pilot program, including any adverse market volatility effects that might occur as a result of large FLEX exercises in FLEX Option series that expire near Non-FLEX expirations and use a p.m. settlement (as discussed below).

In that regard, based on the Exchange's experience in trading FLEX Options to date and over the pilot period, Cboe Options continues to believe that the restrictions on exercise settlement values are no longer necessary to insulate Non-FLEX expirations from the potential adverse market impacts of FLEX expirations.[14]

20673 (April 5, 2012) (SR–CBOE–2012–027) (extending the pilot through the earlier of November 2, 2012 or the date on which the pilot program is approved on a permanent basis); 68145 (November 2, 2012), 77 FR 67044 (November 8, 2012) (SR–CBOE–2012–102) (extending the pilot program through the earlier of November 2, 2013 or the date on which the pilot program is approved on a permanent basis); 70752 (October 24, 2013), 78 FR 65023 (October 30, 2013) (SR–CBOE–2013–099) (extending the pilot program through the earlier of November 3, 2014 or the date on which the pilot program is approved on a permanent basis); 73460 (October 29, 2014), 79 FR 65464 (November 4, 2014) (SR–CBOE–2014–080) (extending the pilot program through the earlier of May 3, 2016 or the date on which the pilot program is approved on a permanent basis); 77742 (April 29, 2016), 81 FR 26857 (May 4, 2016) (SR–CBOE–2016–032) (extending the pilot program through the earlier of May 3, 2017 or the date on which the pilot program is approved on a permanent basis); 80443 (April 12, 2017), 82 FR 18331 (April 18, 2017) (SR–CBOE–2017–032), 83 FR 21808 (May 10, 2018) (extending the pilot program through the earlier of May 3, 2018 or the date on which the pilot program is approved on a permanent basis); 83175 (May 4, 2018), 83 FR 21808 (May 10, 2018) (SR–CBOE–2018–037); 84537 (November 5, 2018), 83 FR 56113 (November 9, 2018) (SR–CBOE–2018–071); 85707 (April 23, 2019), 84 FR 18100 (April 29, 2019) (SR–CBOE–2019–021); 87515 (November 13, 2020), 84 FR 63945 (November 19, 2019) (SR–CBOE–2019–108); 88782 (April 30, 2020), 85 FR 27004 (May 6, 2020) (SR–CBOE–2020–039). At the same time the permissible exercise settlement values pilot was established for FLEX Index Options, the Exchange also established a pilot program eliminating the minimum value size requirements for all FLEX Options. *See* Approval Order, *supra* note 6. The pilot program eliminating the minimum value size requirements was extended twice pursuant to the same rule filings that extended the permissible exercise settlement values (for the same extended periods) and was approved on a permanent basis in a separate rule change filing. *See id; and* Securities Exchange Act Release No. 67624 (August 8, 2012), 77 FR 48580 (August 14, 2012) (SR–CBOE–2012–040).

[7] On October 7, 2019, the Exchange migrated its trading platform to the same system used by the Cboe Affiliated Exchanges (Cboe C2 Exchange, Inc. (''C2''), Cboe EDGX Exchange, Inc. (''EDGX''), Cboe BZX Exchange, Inc. (''BZX''), Cboe BYX Exchange, Inc. (''BYX''), Cboe EDGA Exchange, Inc. (''EDGA'')). In connection with this migration the Exchange restructured its Rulebook. Prior Rule 24A.4.01, covering the pilot program, was relocated to current Rule 4.21(b)(5). *See* Securities Exchange Act Release No. 87235 (October 4, 2019), 84 FR 54671 (October 10, 2019) (SR–CBOE–2019–084).

[8] Except an Asian-settled or Cliquet-settled FLEX Option series, which must have an expiration date that is a business day but may only expire 350 to 371 days (which is approximately 50 to 53 calendar weeks) from the date on which a FLEX Trader submits a FLEX Order to the System.

[9] *See* Rule 4.21(b)(5)(B); *see also* Securities Exchange Act Release No. 87235 (October 4, 2019), 84 FR 54671 (October 10, 2019) (SR–CBOE–2019–084). The rule change removed the provision regarding the exercise settlement value of FLEX Index Options on the NYSE Composite Index, as the Exchange no longer lists options on that index for trading, and included the provisions regarding how the exercise settlement value is determined for each settlement type, as how the exercise settlement value is determined is dependent on the settlement type.

[10] For example, notwithstanding the pilot, the exercise settlement value of a FLEX Index Option that expires on the Tuesday before the third Friday-of-the-month could be a.m. or p.m. settled. However, the exercise settlement value of a FLEX Index Option that expires on the Wednesday before the third Friday-of-the-month could only be a.m. settled.

[11] No change was necessary or requested with respect to FLEX Equity Options. Regardless of the expiration date, FLEX Equity Options are settled by physical delivery of the underlying.

[12] The annual reports also contained certain pilot period and pre-pilot period analyses of volume and open interest for third Friday-of-the-month expiration days, a.m.-settled FLEX Index series and third Friday-of-the-month expiration day Non-FLEX Index series overlying the same index as a third Friday-of-the-month expiration day, p.m.-settled FLEX Index option.

[13] 5 U.S.C. 552; *see infra* note 12.

[14] In further support, the Exchange also notes that the p.m. settlements are already permitted for FLEX Index Options on any other business day except on, or within two business days of, the third Friday-of-the-month. The Exchange is not aware of any market disruptions or problems caused by the use of these settlement methodologies on these expiration dates (or on the expiration dates addressed under the pilot program). The Exchange is also not aware of any market disruptions or problems caused by the use of customized options in the over-the-counter (''OTC'') markets that expire on or near the third Friday-of-the-month and are p.m. settled. In addition, the Exchange believes the reasons for limiting expirations to a.m. settlement, which is something the SEC has imposed since the early 1990s for Non-FLEX Options, revolved around a concern about expiration pressure on the New York Stock Exchange (''NYSE'') at the close that are no longer relevant in today's market. Today, the Exchange believes stock exchanges are able to better handle volume. There are multiple primary listing and unlisted trading privilege (''UTP'') markets, and trading is dispersed among several exchanges and alternative trading systems. In addition, the

To the contrary, Cboe Options believes that the restriction actually places the Exchange at a competitive disadvantage to its OTC counterparts in the market for customized options, and unnecessarily limits market participants' ability to trade in an exchange environment that offers the added benefits of transparency, price discovery, liquidity, and financial stability.

The Exchange also notes that certain position limit, aggregation and exercise limit requirements continue to apply to FLEX Index Options in accordance with Rules 8.35, *Position Limits for FLEX Options,* 8.42(g) *Exercise Limits* (in connection with FLEX Options) and 8.43(j), *Reports Related to Position Limits* (in connection with FLEX Options). Additionally, all FLEX Options remain subject to the general position reporting requirements in Rule 8.43(a).[15] Moreover, the Exchange and its Trading Permit Holder organizations each have the authority, pursuant to Rule 10.9, *Margin Required is Minimum,* to impose additional margin as deemed advisable. Cboe Options continues to believe these existing safeguards serve sufficiently to help monitor open interest in FLEX Option series and significantly reduce any risk of adverse market effects that might occur as a result of large FLEX exercises in FLEX Option series that expire near Non-FLEX expirations and use a p.m. settlement.

Cboe Options is also cognizant of the OTC market, in which similar restrictions on exercise settlement values do not apply. Cboe Options continues to believe that the pilot program is appropriate and reasonable and provides market participants with additional flexibility in determining whether to execute their customized options in an exchange environment or in the OTC market. Cboe Options continues to believe that market participants benefit from being able to trade these customized options in an exchange environment in several ways, including, but not limited to, enhanced efficiency in initiating and closing out positions, increased market transparency, and heightened contra-party creditworthiness due to the role of the Options Clearing Corporation as issuer and guarantor of FLEX Options.

If, in the future, the Exchange proposes an additional extension of the pilot program, or should the Exchange propose to make the pilot program permanent, the Exchange will submit, along with any filing proposing such amendments to the pilot program, an annual report (addressing the same areas referenced above and consistent with the pilot program's Approval Order) to the Commission at least two months prior to the expiration date of the program. The Exchange will also continue, on a periodic basis, to submit interim reports of volume and open interest consistent with the terms of the exercise settlement values pilot program as described in the pilot program's Approval Order. Additionally, the Exchange will provide the Commission with any additional data or analyses the Commission requests because it deems such data or analyses necessary to determine whether the pilot program is consistent with the Exchange Act. The Exchange is in the process of making public on its website all data and analyses previously submitted to the Commission under the pilot program, and will make public any data and analyses it submits to the Commission under the pilot program in the future.[16]

As noted in the pilot program's Approval Order, any positions established under the pilot program would not be impacted by the expiration of the pilot program.[17]

2. Statutory Basis

The Exchange believes the proposed rule change is consistent with the Securities Exchange Act of 1934 (the ''Act'') and the rules and regulations thereunder applicable to the Exchange and, in particular, the requirements of Section 6(b) of the Act.[18] Specifically, the Exchange believes the proposed rule change is consistent with the Section 6(b)(5)[19] requirements that the rules of an exchange be designed to prevent fraudulent and manipulative acts and practices, to promote just and equitable principles of trade, to foster cooperation and coordination with persons engaged in regulating, clearing, settling, processing information with respect to, and facilitating transactions in securities, to remove impediments to and perfect the mechanism of a free and open market and a national market system, and, in general, to protect investors and the public interest. Additionally, the Exchange believes the proposed rule change is consistent with the Section 6(b)(5)[20] requirement that the rules of an exchange not be designed to permit unfair discrimination between customers, issuers, brokers, or dealers.

In particular, the Exchange believes that the proposed extension of the pilot program, which permits an additional exercise settlement value, would provide greater opportunities for investors to manage risk through the use of FLEX Options. Further, the Exchange believes that it has not experienced any adverse effects from the operation of the pilot program, including any adverse market volatility effects that might occur as a result of large FLEX exercises in FLEX Option series that expire near Non-FLEX expirations and are p.m.-settled. The Exchange also believes that the extension of the exercise settlement values pilot does not raise any unique regulatory concerns. In particular, although p.m. settlements may raise questions with the Commission, the

Exchange believes that surveillance techniques are much more robust and automated. In the early 1990s, it was also thought by some that opening procedures allow more time to attract contra-side interest to reduce imbalances. The Exchange believes, however, that today, order flow is predominantly electronic and the ability to smooth out openings and closes is greatly reduced (*e.g.,* market-on-close procedures work just as well as openings). Also, other markets, such as the NASDAQ Stock Exchange, do not have the same type of pre-opening imbalance disseminations as NYSE, so many stocks are not subject to the same procedures on the third Friday-of-the-month. In addition, the Exchange believes that NYSE has reduced the required time a specialist has to wait after disseminating a pre-opening indication. So, in this respect, the Exchange believes there is less time to react in the opening than in the close. Moreover, to the extent there may be a risk of adverse market effects attributable to p.m. settled options that would otherwise be traded in a non-transparent fashion in the OTC market, the Exchange continues to believe that such risk would be lessened by making these customized options eligible for trading in an exchange environment because of the added transparency, price discovery, liquidity, and financial stability available.

[15] Rule 8.43(a) provides that ''[i]n a manner and form prescribed by the Exchange, each Trading Permit Holder shall report to the Exchange, the name, address, and social security or tax identification number of any customer who, acting alone, or in concert with others, on the previous business day maintained aggregate long or short positions on the same side of the market of 200 or more contracts of any single class of option contracts dealt in on the Exchange. The report shall indicate for each such class of options, the number of option contracts comprising each such position and, in the case of short positions, whether covered or uncovered.'' For purposes of Rule 8.43, the term ''customer'' in respect of any Trading Permit Holder includes ''the Trading Permit Holder, any general or special partner of the Trading Permit Holder, any officer or director of the Trading Permit Holder, or any participant, as such, in any joint, group or syndicate account with the Trading Permit Holder or with any partner, officer or director thereof.'' Rule 8.43(d).

[16] Available at *https://www.cboe.com/aboutcboe/legal-regulatory/national-market-system-plans/pm-settlement-flex-pm-data.*

[17] For example, a position in a p.m.-settled FLEX Index Option series that expires on the third Friday-of-the-month in January 2020 could be established during the exercise settlement values pilot. If the pilot program were not extended (or made permanent), then the position could continue to exist. However, the Exchange notes that any further trading in the series would be restricted to transactions where at least one side of the trade is a closing transaction. *See* Approval Order at footnote 3, *supra* note 6.

[18] 15 U.S.C. 78f(b).

[19] 15 U.S.C. 78f(b)(5).

[20] *Id.*

Exchange believes that, based on the Exchange's experience in trading FLEX Options to date and over the pilot period, market impact and investor protection concerns will not be raised by this rule change. The Exchange also believes that the proposed rule change would continue to provide Trading Permit Holders and investors with additional opportunities to trade customized options in an exchange environment (which offers the added benefits of transparency, price discovery, liquidity, and financial stability as compared to the over-the-counter market) and subject to exchange-based rules, and investors would benefit as a result.

B. Self-Regulatory Organization's Statement on Burden on Competition

Cboe Options does not believe that the proposed rule change will impose any burden on competition that is not necessary or appropriate in furtherance of the purposes of the Act. The Exchange believes there is sufficient investor interest and demand in the pilot program to warrant its extension. The Exchange believes that, for the period that the pilot has been in operation, the program has provided investors with additional means of managing their risk exposures and carrying out their investment objectives. Furthermore, the Exchange believes that it has not experienced any adverse market effects with respect to the pilot program, including any adverse market volatility effects that might occur as a result of large FLEX exercises in FLEX Option series that expire near Non-Flex expirations and use a p.m. settlement. Cboe Options believes that the restriction actually places the Exchange at a competitive disadvantage to its OTC counterparts in the market for customized options, and unnecessarily limits market participants' ability to trade in an exchange environment that offers the added benefits of transparency, price discovery, liquidity, and financial stability. Therefore, the Exchange does not believe that the proposed rule change will impose any burden on competition.

C. Self-Regulatory Organization's Statement on Comments on the Proposed Rule Change Received From Members, Participants, or Others

The Exchange neither solicited nor received comments on the proposed rule change.

III. Date of Effectiveness of the Proposed Rule Change and Timing for Commission Action

Because the foregoing proposed rule change does not: (i) Significantly affect the protection of investors or the public interest; (ii) impose any significant burden on competition; and (iii) become operative for 30 days from the date on which it was filed, or such shorter time as the Commission may designate, it has become effective pursuant to Section 19(b)(3)(A) of the Act [21] and Rule 19b–4(f)(6) thereunder.[22]

A proposed rule change filed under Rule 19b–4(f)(6) [23] normally does not become operative for 30 days after the date of filing. However, pursuant to Rule 19b–4(f)(6)(iii),[24] the Commission may designate a shorter time if such action is consistent with the protection of investors and the public interest. The Exchange has asked the Commission to waive the 30-day operative delay so that the proposal may become operative immediately upon filing. The Exchange states that such waiver will allow the Exchange to extend the pilot program and maintain the status quo, thereby reducing market disruption.

The Commission believes that waiving the 30-day operative delay is consistent with the protection of investors and the public interest, as it will allow the pilot program to continue uninterrupted, thereby avoiding investor confusion that could result from a temporary interruption in the pilot program. For this reason, the Commission designates the proposed rule change to be operative upon filing.[25]

At any time within 60 days of the filing of the proposed rule change, the Commission summarily may temporarily suspend such rule change if it appears to the Commission that such action is necessary or appropriate in the public interest, for the protection of investors, or otherwise in furtherance of the purposes of the Act. If the Commission takes such action, the Commission shall institute proceedings to determine whether the proposed rule should be approved or disapproved.

IV. Solicitation of Comments

Interested persons are invited to submit written data, views, and arguments concerning the foregoing, including whether the proposed rule change is consistent with the Act. Comments may be submitted by any of the following methods:

Electronic Comments

- Use the Commission's internet comment form (*http://www.sec.gov/rules/sro.shtml*); or
- Send an email to *rule-comments@sec.gov*. Please include File Number SR–CBOE–2020–103 on the subject line.

Paper Comments

- Send paper comments in triplicate to Secretary, Securities and Exchange Commission, 100 F Street NE, Washington, DC 20549–1090.

All submissions should refer to File Number SR–CBOE–2020–103. This file number should be included on the subject line if email is used. To help the Commission process and review your comments more efficiently, please use only one method. The Commission will post all comments on the Commission's internet website (*http://www.sec.gov/rules/sro.shtml*). Copies of the submission, all subsequent amendments, all written statements with respect to the proposed rule change that are filed with the Commission, and all written communications relating to the proposed rule change between the Commission and any person, other than those that may be withheld from the public in accordance with the provisions of 5 U.S.C. 552, will be available for website viewing and printing in the Commission's Public Reference Room, 100 F Street NE, Washington, DC 20549, on official business days between the hours of 10:00 a.m. and 3:00 p.m. Copies of the filing also will be available for inspection and copying at the principal office of the Exchange. All comments received will be posted without change. Persons submitting comments are cautioned that we do not redact or edit personal identifying information from comment submissions. You should submit only information that you wish to make available publicly. All submissions should refer to File Number SR–CBOE–2020–103, and should be submitted on or before November 24, 2020.

[21] 15 U.S.C. 78s(b)(3)(A).

[22] 17 CFR 240.19b–4(f)(6). In addition, Rule 19b–4(f)(6)(iii) requires a self-regulatory organization to give the Commission written notice of its intent to file the proposed rule change, along with a brief description and text of the proposed rule change, at least five business days prior to the date of filing of the proposed rule change, or such shorter time as designated by the Commission. The Exchange has satisfied this requirement.

[23] 17 CFR 240.19b–4(f)(6).

[24] 17 CFR 240.19b–4(f)(6)(iii).

[25] For purposes only of waiving the operative delay for this proposal, the Commission has considered the proposed rule's impact on efficiency, competition, and capital formation. *See* 15 U.S.C. 78c(f).

[26] 17 CFR 200.30–3(a)(12).

For the Commission, by the Division of Trading and Markets, pursuant to delegated authority.[26]

J. Matthew DeLesDernier,

Assistant Secretary.

[FR Doc. 2020–24270 Filed 11–2–20; 8:45 am]

BILLING CODE 8011–01–P

SECURITIES AND EXCHANGE COMMISSION

Sunshine Act Meetings

TIME AND DATE: Notice is hereby given, pursuant to the provisions of the Government in the Sunshine Act, Public Law 94–409, that the Securities and Exchange Commission Small Business Capital Formation Advisory Committee will hold a public meeting on Monday, November 9, 2020, via videoconference.

PLACE: The meeting will begin at 10:00 a.m. (ET) and will be open to the public. The meeting will be conducted by remote means (videoconference) and/or at the Commission's headquarters, 100 F Street NE, Washington, DC 20549. Members of the public may watch the webcast of the meeting on the Commission's website at *www.sec.gov.*

STATUS: On October 23, 2020, the Commission published notice of the Committee meeting (Release No. 33–10877), indicating that the meeting is open to the public and inviting the public to submit written comments to the Committee. This Sunshine Act notice is being issued because a majority of the Commission may attend the meeting.

MATTER TO BE CONSIDERED: The agenda for the meeting includes matters relating to rules and regulations affecting small and emerging businesses and their investors.

CONTACT PERSON FOR MORE INFORMATION: For further information and to ascertain what, if any, matters have been added, deleted or postponed; please contact Vanessa A. Countryman from the Office of the Secretary at (202) 551–5400.

Dated: October 30, 2020.

Vanessa A. Countryman,

Secretary.

[FR Doc. 2020–24490 Filed 10–30–20; 4:15 pm]

BILLING CODE 8011–01–P

SECURITIES AND EXCHANGE COMMISSION

[Release No. 34–90278; File No. SR–MEMX–2020–13]

Self-Regulatory Organizations; MEMX LLC; Notice of Filing and Immediate Effectiveness of a Proposed Rule Change To Enable Members To Designate Certain Orders To Be Identified as Retail Orders to the Exchange

October 28, 2020.

Pursuant to Section 19(b)(1) [1] of the Securities Exchange Act of 1934 (the ''Act'') [2] and Rule 19b–4 thereunder,[3] notice is hereby given that on October 26, 2020, MEMX LLC (''MEMX'' or the ''Exchange'') filed with the Securities and Exchange Commission (the ''Commission'') the proposed rule change as described in Items I, II, and III below, which Items have been prepared by the Exchange. The Exchange filed the proposal as a ''non-controversial'' proposed rule change pursuant to Section 19(b)(3)(A)(iii) of the Act [4] and Rule 19b–4(f)(6) thereunder.[5] The Commission is publishing this notice to solicit comments on the proposed rule change from interested persons.

I. Self-Regulatory Organization's Statement of the Terms of Substance of the Proposed Rule Change

The Exchange is filing with the Commission a proposed rule change to adopt new Rule 11.21 to enable members of the Exchange (''Members'') to designate certain orders they submit to the Exchange on behalf of retail customers to be identified as retail orders to the Exchange. The text of the proposed rule change is provided in Exhibit 5.

II. Self-Regulatory Organization's Statement of the Purpose of, and Statutory Basis for, the Proposed Rule Change

In its filing with the Commission, the Exchange included statements concerning the purpose of and basis for the proposed rule change and discussed any comments it received on the proposed rule change. The text of these statements may be examined at the places specified in Item IV below. The Exchange has prepared summaries, set forth in sections A, B, and C below, of the most significant aspects of such statements.

A. Self-Regulatory Organization's Statement of the Purpose of, and Statutory Basis for, the Proposed Rule Change

1. Purpose

The Exchange proposes to adopt new Rule 11.21 to enable Members to designate certain orders they submit to the Exchange on behalf of retail customers to be identified as retail orders to the Exchange. Under the proposed rule change, the Exchange would create a new class of market participant for any Member that satisfies the requirements under proposed Rule 11.21 called a Retail Member Organization (''RMO''), which would be eligible to submit certain retail order flow (''Retail Orders'') to the Exchange. Specifically, proposed Rule 11.21 would: (i) Define a Retail Order and RMO; (ii) set forth an RMO's qualification and application requirements and the Exchange's approval process; (iii) outline procedures for when an RMO fails to abide by the Retail Order requirements; and (iv) outline the procedures under which a Member may appeal the Exchange's decision to disapprove it or disqualify it as an RMO. The Exchange notes that proposed Rule 11.21 is substantially similar to and based on paragraphs (a)–(d) of Cboe BZX Exchange, Inc. (''Cboe BZX'') Rule 11.25.[6]

Definitions

The Exchange proposes to adopt the following definitions under proposed Rule 11.21(a). First, the term ''Retail Member Organization'' or ''RMO'' would be defined as a Member (or a division thereof) that has been approved by the Exchange to submit Retail Orders. Second, the term ''Retail Order'' would be defined as an agency or riskless principal order that meets the criteria of FINRA Rule 5320.03 that originates from a natural person and is submitted to the Exchange by an RMO, provided that no change is made to the terms of the order with respect to price or side of market and the order does not originate from a trading algorithm or any other computerized methodology.

[1] 15 U.S.C. 78s(b)(1).

[2] 15 U.S.C. 78a.

[3] 17 CFR 240.19b–4.

[4] 15 U.S.C. 78s(b)(3)(A)(iii).

[5] 17 CFR 240.19b–4(f)(6).

[6] *See* Cboe BZX Rule 11.25; *see also* Securities Exchange Act Release Nos. 73237 (September 26, 2014), 79 FR 59537 (October 2, 2014) (SR–BATS–2014–043); 73677 (November 24, 2014), 79 FR 71150 (December 1, 2014) (SR–BATS–2014–058); 76205 (October 21, 2015), 80 FR 65828 (October 27, 2015) (SR–BATS–2015–90).

RMO Qualifications and Approval Process

Under proposed Rule 11.21(b), any Member could qualify as an RMO if it conducts a retail business or routes retail orders on behalf of another broker-dealer. Proposed Rule 11.21(b)(1) makes clear that an RMO that carries retail customer accounts on a fully disclosed basis would be considered to conduct a retail business for purposes of the rule. The qualification standards and approval process under proposed Rule 11.21(b) are designed to ensure that Members are properly qualified as an RMO and only designate as Retail Orders those orders that meet the definition of Retail Orders under proposed Rule 11.21(a)(2) described above. Any Member that wishes to obtain RMO status would be required to submit: (i) an application form; (ii) supporting documentation sufficient to demonstrate the retail nature and characteristics of the applicant's order flow;[7] and (iii) an attestation, in a form prescribed by the Exchange, that substantially all orders submitted by the Member as a Retail Order will qualify as such under proposed Rule 11.21(b).

An RMO would be required to have written policies and procedures reasonably designed to assure that it will only designate orders as Retail Orders if all requirements of a Retail Order are met. Such written policies and procedures must require the Member to (i) exercise due diligence before entering a Retail Order to assure that entry as a Retail Order is in compliance with the requirements of proposed Rule 11.21, and (ii) monitor whether orders entered as Retail Orders meet the applicable requirements. If the RMO does not itself conduct a retail business but routes Retail Orders on behalf another broker-dealer, the RMO's supervisory procedures must be reasonably designed to assure that the orders it receives from such other broker-dealer that it designates as Retail Orders meet the definition of a Retail Order. Such an RMO must (i) obtain an annual written representation, in a form acceptable to the Exchange, from each other broker-dealer that sends it orders to be designated as Retail Orders that entry of such orders as Retail Orders will be in compliance with the requirements of proposed Rule 11.21, and (ii) monitor whether Retail Order flow routed on behalf of such other broker-dealers continues to meet the applicable requirements.[8]

If the Exchange disapproves a Member's application to be an RMO, the Exchange would provide a written notice to the Member. The disapproved applicant could appeal the disapproval by the Exchange as provided in proposed Rule 11.21(d) and/or reapply for RMO status 90 days after the disapproval notice is issued by the Exchange. An RMO also could voluntarily withdraw from such status at any time by giving written notice to the Exchange.

As described above, under proposed Rule 11.21(b), any Member could qualify as an RMO if it conducts a retail business or routes retail orders on behalf of another broker-dealer, and Proposed Rule 11.21(b)(1) makes clear that an RMO that carries retail customer accounts on a fully disclosed basis would be considered to conduct a retail business for purposes of the rule. The Exchange proposes to distinguish an RMO's routing services on behalf of another broker-dealer from services provided by an RMO that carries retail customer accounts on a fully disclosed basis, as described below. As background with respect to this aspect of the proposed change, the Exchange first would like to describe the terms ''introducing broker'', ''carrying firm'' or ''carrying broker-dealer'', and ''fully disclosed,'' as such terms are commonly used in the securities industry. An ''introducing'' broker-dealer is ''one that has a contractual arrangement with another firm, known as the carrying or clearing firm, under which the carrying firm agrees to perform certain services for the introducing firm. Usually, the introducing firm submits its customer accounts and customer orders to the carrying firm, which executes the orders and carries the account. The carrying firm's duties include the proper disposition of the customer funds and securities after the trade date, the custody of customer securities and funds, and the recordkeeping associated with carrying customer accounts.''[9] Further, a ''fully disclosed'' introducing arrangement is ''distinguished from an omnibus clearing arrangement where the clearing firm maintains one account for all the customer transactions of the introducing firm. In an omnibus relationship, the clearing firm does not know the identity of the customers of the introducing firm. In a fully disclosed clearing arrangement, the clearing firm knows the names, addresses, securities positions and other relevant data as to each customer.''[10]

With respect to a broker-dealer that is routing on behalf of another broker-dealer, the Exchange does not believe that the routing broker-dealer has sufficient information to assess whether orders are truly retail in nature, and thus, requires an RMO routing on behalf of other broker-dealers to maintain additional supervisory procedures and obtain annual attestations, as described above, in order to submit Retail Orders to the Exchange. In contrast, however, if a broker-dealer is carrying a customer account on a fully disclosed basis, then such carrying broker-dealer is required to perform certain diligence regarding such account that the Exchange believes is sufficient to assess whether a customer is a retail customer in order to submit orders on behalf of such a customer to the Exchange as a Retail Order. The carrying broker of an account typically handles orders from its retail customers that are ''introduced'' by an introducing broker. However, as noted above, in contrast to a typical routing relationship on behalf of another broker-dealer, a carrying broker does obtain a significant level of information regarding each customer introduced by the introducing broker. Accordingly, the Exchange proposes to state in Rule 11.21(b)(1) that for purposes of Rule 11.21, ''conducting a retail business shall include carrying retail customer accounts on a fully disclosed basis.''

Failure of RMO To Abide by Retail Order Requirements

Proposed Rule 11.21(c) addresses an RMO's failure to abide by Retail Order requirements. If an RMO designates orders submitted to the Exchange as Retail Orders and the Exchange determines, in its sole discretion, that those orders fail to meet any of the requirements of Retail Orders, the Exchange may disqualify a Member from its status as an RMO. When disqualification determinations are made, the Exchange would provide a written disqualification notice to the Member. A disqualified RMO could appeal the disqualification provided in proposed Rule 11.21(d) and/or reapply for RMO status 90 days after the disqualification notice issued by the Exchange.

[7] For example, a prospective RMO could be required to provide sample marketing literature, website screenshots, other publicly disclosed materials describing the retail nature of their order flow, and such other documentation and information as the Exchange may require to obtain reasonable assurance that the applicant's order flow would meet the requirements of the Retail Order definition.

[8] The Exchange or another self-regulatory organization on behalf of the Exchange will review an RMO's compliance with these requirements through an exam-based review of the RMO's internal controls.

[9] *See* Securities Exchange Act Release No. 31511 (Nov. 24, 1992), 57 FR 56973 (December 2, 1992).

[10] *Id.*

Appeal of Disapproval or Disqualification

Proposed Rule 11.21(d) provides appeal rights to Members. If a Member disputes the Exchange's decision to disapprove it as an RMO under proposed Rule 11.21(b) or disqualify it under proposed Rule 11.21(c), such Member may request, within five business days after notice of the decision is issued by the Exchange, that the Retail Member Organization Panel (the ''RMO Panel'') review the decision to determine if it was correct. The RMO Panel would consist of the Exchange's Chief Regulatory Officer (''CRO''), or a designee of the CRO, and two officers of the Exchange designated by the Exchange's Chief Executive Officer. The RMO Panel would review the facts and render a decision within the time frame prescribed by the Exchange. The RMO Panel could overturn or modify an action taken by the Exchange and all determinations by the RMO Panel would constitute final action by the Exchange on the matter at issue.

Implementation

The Exchange notes that, under the proposed rule change, an order involving any Regulation NMS security traded on the Exchange that meets the definition of Retail Order would be eligible to be designated as such by an RMO. The Exchange also notes that orders designated as Retail Orders would only be designated as such to the Exchange and would not be designated as such on the Exchange's market data feeds or otherwise identifiable as Retail Orders by any market participants or the public. Further, the Exchange notes that orders designated as Retail Orders would be handled in the exact same way under the Exchange's rules as if such orders were not designated as Retail Orders. In other words, the designation of an order as a Retail Order would not in any way affect the priority or other handling procedures applicable to such order under the Exchange's rules.

The purpose of enabling RMOs to designate orders as Retail Orders to the Exchange under the proposed rule change is so the Exchange may identify and track orders designated as such, which the Exchange believes will be useful for it in considering potential pricing modifications to such orders as it continues to evaluate its pricing structure following the recent commencement of its operations as a national securities exchange. The Exchange further believes that the proposed rule change would enable the Exchange to have the appropriate mechanisms and processes in place to implement any differentiated pricing for Retail Orders if and when the Exchange proposes to do so in the future. The Exchange notes that, at some point following the adoption and implementation of proposed Rule 11.21 as described in this proposed rule change, the Exchange may separately propose to amend its fee schedule to adopt a specific fee code for Retail Orders to be provided on an RMO's execution reports and/or to provide differentiated pricing for Retail Orders, which the Exchange believes would attract additional retail order flow to the Exchange, thereby providing the benefits of exchange transparency, regulation, and oversight to more retail orders. The Exchange believes that the proposed rule change would allow it to be organized with the appropriate infrastructure (*i.e.,* mechanisms and processes) in advance of any such proposal, and as such, would allow the Exchange to more quickly implement any such differentiated pricing.

Comparison To Existing Rules of Other Equity Exchanges

As noted above, proposed Rule 11.21 is substantially similar to and based on Cboe BZX Rule 11.25.[11] Specifically, proposed Rule 11.21 is nearly identical to paragraphs (a)–(d) of Cboe BZX Rule 11.25, with the only differences being to the name of the RMO Panel, the deletion of a defined term not otherwise used in the rule, and that the Exchange's Chief Executive Officer, rather than Chief Information Officer, designates two officers to serve on the RMO Panel, and otherwise differs from Cboe BZX Rule 11.25 only in that such rule contains a separate paragraph (e) that allows an RMO to designate a Retail Order to be identified as such on Cboe BZX's proprietary data feeds.[12] As noted above, proposed Rule 11.21 would not allow an RMO to designate a Retail Order to be identified as such on the Exchange's market data feeds.

The Exchange further notes that proposed Rule 11.21 is also substantially similar to the existing rules of several other equity exchanges.[13] Certain of these exchanges include these rules as part of a retail attribution program,[14] retail liquidity program [15] or retail price improvement program.[16] However, unlike those programs, the Exchange does not propose to attribute retail orders in its market data feeds, to adopt any special order handling for Retail Orders or orders intended to provide liquidity to Retail Orders, or to adopt any mechanics for price improvement for Retail Orders. Instead, as described above, the proposed rule change would only enable an RMO to designate that their Retail Orders be identified as such to the Exchange.

2. Statutory Basis

The Exchange believes that the proposed rule change is consistent with Section 6(b) of the Act, in general, and furthers the objectives of Section 6(b)(5) of the Act, in particular, in that it is designed to prevent fraudulent and manipulative acts and practices, to promote just and equitable principles of trade, and to remove impediments to and perfect the mechanism of a free and open market and a national market system. The Exchange believes that the proposed rule change is consistent with these principles because it would increase competition among execution venues and enable the Exchange to implement future pricing changes to encourage the submission of additional Retail Orders to the Exchange. The Exchange notes that a significant percentage of the orders of retail investors are executed over-the-counter.[17] The Exchange believes that it is appropriate to put in place the mechanisms and processes to enable the Exchange to subsequently offer any differentiated pricing for Retail Orders as the Exchange believes that such pricing could incentivize market participants to bring more retail order flow to the Exchange, thereby providing the benefits of exchange transparency, regulation, and oversight to more retail orders.

The Exchange notes that the proposed rule change is substantially similar to paragraphs (a)–(d) of Cboe BXZ Rule 11.25 and the existing rules of several other equity exchanges, as described in more detail above.[18] Specifically, proposed Rule 11.21 contains nearly identical definitions, standards and qualification procedures as Cboe BZX Rule 11.25 and the comparable retail order rules of Cboe EDGX, Cboe BYX,

[11] *See supra* note 5 [sic].

[12] *Id.*

[13] *See, e.g.,* Cboe EDGX Exchange, Inc. (''Cboe EDGX'') Rule 11.21; Cboe BYX Exchange, Inc. (''Cboe BYX'') Rule 11.24; Nasdaq BX, Inc. (''Nasdaq BX'') Rule 4780; NYSE Arca, Inc. (''NYSE Arca'') Rule 7.44–E.

[14] *See, e.g.,* Cboe EDGX Rule 11.21.

[15] *See, e.g.,* NYSE Arca Rule 7.44–E.

[16] *See, e.g.,* Nasdaq BX Rule 4780.

[17] Based on data made available through consolidated data feeds (*i.e.,* CTS and UTDF) and OTC data made available by FINRA, during the week of August 31, 2020, the volume reported by retail wholesalers reporting to the FINRA TRF exceeded 25% of overall market volume.

[18] *See supra* notes 5 and 12 [sic].

Nasdaq BX, and NYSE Arca.[19] However, unlike certain of these exchanges' rules, the proposed rule change does not propose to attribute retail orders in the Exchange's market data feeds, to adopt any special order handling for Retail Orders or orders intended to provide liquidity to Retail Orders, or to adopt any mechanics for price improvement for Retail Orders, as described above.

The Exchange also believes its proposed qualification standards and review process under proposed Rule 11.21 promote just and equitable principles and are not unfairly discriminatory because they are designed to ensure that Members are properly qualified as RMOs and only designate as Retail Orders those orders that meet the definition of Retail Orders under proposed Rule 11.21(a)(1) described above. The qualification process proposed herein by the Exchange is not designed to permit unfair discrimination, but rather ensure that orders that are designated as Retail Orders are, in fact, orders submitted by a retail customer that satisfy the proposed definition of Retail Order. Lastly, the Exchange notes that these qualification and review provisions are nearly identical to those included in the rules of the Cboe BZX, Cboe EDGX, Cboe BYX, Nasdaq BX, and NYSE Arca.[20]

The Exchange further believes that distinguishing an RMO's routing services on behalf of another broker-dealer from services provided by an RMO that carries retail customer accounts on a fully disclosed basis in proposed Rule 11.21(b)(1) is designed to prevent fraudulent and manipulative acts and practices because it highlights the parties for whom additional procedures are required because they do not maintain relationships with the end customer (*i.e.,* routing brokers) and still requires the RMO to follow such procedures to ensure that such orders qualify as Retail Orders. As proposed, however, an RMO would not be required to follow such procedures, including obtaining annual attestations, to the extent such RMO actually knows the end customer and carries the account of such customer and thus can itself confirm that the orders qualify as Retail Orders. The Exchange believes that this aspect of the proposed rule change will remove impediments to and perfect the mechanism of a free and open market and a national market system because it will allow RMOs that carry retail customer accounts to designate Retail Orders as such without imposing additional attestation requirements that the Exchange believes are not necessary for such RMOs, as described above.

B. Self-Regulatory Organization's Statement on Burden on Competition

The Exchange believes its proposed rule change would not impose any burden on competition that is not necessary or appropriate in furtherance of the purposes of the Act. The Exchange believes that the proposed amendment would not burden intramarket competition because the ability to designate Retail Orders to be identified as such to the Exchange would be open to all Members that wish to send Retail Orders to the Exchange. The Exchange believes the proposed rule change would not burden, but rather increase, intermarket competition by permitting RMOs to identify orders as Retail Orders when submitted to the Exchange, which would ultimately enable the Exchange to better compete with other exchanges that offer retail order programs.[21] As noted above, at this time the Exchange is not proposing to attribute retail orders in the Exchange's market data feeds, to adopt any special order handling for Retail Orders or orders intended to provide liquidity to Retail Orders, or to adopt any mechanics for price improvement for Retail Orders. Rather, adoption of the proposed rule will enable the Exchange to have the appropriate mechanisms and processes in place to implement differentiated pricing for Retail Orders if and when the Exchange proposes to do so in the future.

C. Self-Regulatory Organization's Statement on Comments on the Proposed Rule Change Received From Members, Participants, or Others

The Exchange neither solicited nor received comments on the proposed rule change.

III. Date of Effectiveness of the Proposed Rule Change and Timing for Commission Action

Because the foregoing proposed rule change does not: (i) Significantly affect the protection of investors or the public interest; (ii) impose any significant burden on competition; and (iii) become operative for 30 days from the date on which it was filed, or such shorter time as the Commission may designate, it has become effective pursuant to Section 19(b)(3)(A) of the Act[22] and Rule 19b–4(f)(6)[23] thereunder.

At any time within 60 days of the filing of the proposed rule change, the Commission summarily may temporarily suspend such rule change if it appears to the Commission that such action is necessary or appropriate in the public interest, for the protection of investors, or otherwise in furtherance of the purposes of the Act. If the Commission takes such action, the Commission shall institute proceedings to determine whether the proposed rule should be approved or disapproved.

IV. Solicitation of Comments

Interested persons are invited to submit written data, views, and arguments concerning the foregoing, including whether the proposed rule change is consistent with the Act. Comments may be submitted by any of the following methods:

Electronic Comments

- Use the Commission's internet comment form (*http://www.sec.gov/rules/sro.shtml*); or
- Send an email to *rule-comments@sec.gov.* Please include File Number SR–MEMX–2020–13 on the subject line.

Paper Comments

- Send paper comments in triplicate to the Secretary, Securities and Exchange Commission, 100 F Street NE, Washington, DC 20549–1090.

All submissions should refer to File Number SR–MEMX–2020–13. This file number should be included on the subject line if email is used. To help the Commission process and review your comments more efficiently, please use only one method. The Commission will post all comments on the Commission's internet website (*http://www.sec.gov/rules/sro.shtml*). Copies of the submission, all subsequent amendments, all written statements with respect to the proposed rule change that are filed with the Commission, and all written communications relating to the proposed rule change between the Commission and any person, other than those that may be withheld from the public in accordance with the provisions of 5 U.S.C. 552, will be available for website viewing and printing in the Commission's Public Reference Room, 100 F Street NE, Washington, DC 20549, on official business days between the hours of 10:00 a.m. and 3:00 p.m. Copies of the filing also will be available for inspection and copying at the principal office of the Exchange. All comments received will be posted without change. Persons submitting comments are cautioned that we do not redact or edit

[19] *Id.*

[20] *Id.*

[21] *See supra* notes 5 and 12 [sic].

[22] 15 U.S.C. 78s(b)(3)(A).

[23] 17 CFR 240.19b–4.

personal information from comment submissions. You should submit only information that you wish to make available publicly. All submissions should refer to File Number SR–MEMX–2020–13 and should be submitted on or before November 24, 2020.

For the Commission, by the Division of Trading and Markets, pursuant to delegated authority.[24]

J. Matthew DeLesDernier,

Assistant Secretary.

[FR Doc. 2020–24269 Filed 11–2–20; 8:45 am]

BILLING CODE 8011–01–P

SECURITIES AND EXCHANGE COMMISSION

[Release No. 34–90277; File No. SR–CboeBZX–2020–036]

Self-Regulatory Organizations; Cboe BZX Exchange, Inc.; Notice of Designation of a Longer Period for Commission Action on Proceedings To Determine Whether To Approve or Disapprove a Proposed Rule Change To Amend Rule 14.11, Other Securities

October 28, 2020.

On April 29, 2020, Cboe BZX Exchange, Inc. (''Exchange'' or ''BZX'') filed with the Securities and Exchange Commission (''Commission''), pursuant to Section 19(b)(1) of the Securities Exchange Act of 1934 (''Act'') [1] and Rule 19b–4 thereunder,[2] a proposed rule change to amend one of the continued listing requirements relating to certain exchange-traded products (''ETPs'') under BZX Rule 14.11. The proposed rule change was published for comment in the **Federal Register** on May 7, 2020.[3] On June 16, 2020, pursuant to Section 19(b)(2) of the Act,[4] the Commission designated a longer period within which to approve the proposed rule change, disapprove the proposed rule change, or institute proceedings to determine whether to disapprove the proposed rule change.[5] On August 4, 2020, the Commission instituted proceedings under Section 19(b)(2)(B) of the Act [6] to determine whether to approve or disapprove the proposed rule change.[7] The Commission has received one comment letter on the proposed rule change.[8]

Section 19(b)(2) of the Act [9] provides that, after initiating disapproval proceedings, the Commission shall issue an order approving or disapproving the proposed rule change not later than 180 days after the date of publication of notice of filing of the proposed rule change. The Commission may extend the period for issuing an order approving or disapproving the proposed rule change by not more than 60 days if the Commission determines that a longer period is appropriate and publishes reasons for such determination. The proposed rule change was published for notice and comment in the **Federal Register** on May 7, 2020. November 3, 2020 is 180 days from that date, and January 2, 2021 is 240 days from that date.

The Commission finds it appropriate to designate a longer period within which to issue an order approving or disapproving the proposed rule change so that it has sufficient time to consider the proposed rule change. Accordingly, the Commission, pursuant to Section 19(b)(2) of the Act,[10] designates January 2, 2021 as the date by which the Commission shall either approve or disapprove the proposed rule change (File No. SR–CboeBZX–2020–036).

For the Commission, by the Division of Trading and Markets, pursuant to delegated authority.[11]

J. Matthew DeLesDernier,

Assistant Secretary.

[FR Doc. 2020–24268 Filed 11–2–20; 8:45 am]

BILLING CODE 8011–01–P

[24] 17 CFR 200.30–3(a)(12).

[1] 15 U.S.C. 78s(b)(1).

[2] 17 CFR 240.19b–4.

[3] *See* Securities Exchange Act Release No. 88795 (May 1, 2020), 85 FR 27254.

[4] 15 U.S.C. 78s(b)(2).

[5] *See* Securities Exchange Act Release No. 89076, 85 FR 37488 (June 22, 2020).

[6] 15 U.S.C. 78s(b)(2)(B).

[7] *See* Securities Exchange Act Release No. 89472, 85 FR 48318 (August 10, 2020).

[8] Comments on the proposed rule change can be found on the Commission's website at: *https://www.sec.gov/comments/sr-cboebzx-2020-036/srcboebzx2020036.htm.*

[9] 15 U.S.C. 78s(b)(2).

[10] *Id.*

[11] 17 CFR 200.30–3(a)(31).

SMALL BUSINESS ADMINISTRATION

[Disaster Declaration #16633 and #16634; Louisiana Disaster Number LA–00103]

Presidential Declaration Amendment of a Major Disaster for the State of Louisiana

AGENCY: U.S. Small Business Administration.

ACTION: Amendment 6.

SUMMARY: This is an amendment of the Presidential declaration of a major disaster for the State of Louisiana (FEMA–4559–DR), dated 08/28/2020.

Incident: Hurricane Laura.

Incident Period: 08/22/2020 through 08/27/2020.

DATES: Issued on 08/28/2020.

Physical Loan Application Deadline Date: 11/27/2020.

Economic Injury (EIDL) Loan Application Deadline Date: 05/28/2021.

ADDRESSES: Submit completed loan applications to: U.S. Small Business Administration, Processing and Disbursement Center, 14925 Kingsport Road, Fort Worth, TX 76155.

FOR FURTHER INFORMATION CONTACT: A. Escobar, Office of Disaster Assistance, U.S. Small Business Administration, 409 3rd Street SW, Suite 6050, Washington, DC 20416, (202) 205–6734.

SUPPLEMENTARY INFORMATION: The notice of the President's major disaster declaration for the State of Louisiana, dated 08/28/2020, is hereby amended to extend the deadline for filing applications for physical damages as a result of this disaster to 11/27/2020. All other information in the original declaration remains unchanged.

(Catalog of Federal Domestic Assistance Number 59008)

Cynthia Pitts,

Acting Associate Administrator for Disaster Assistance.

[FR Doc. 2020–24316 Filed 11–2–20; 8:45 am]

BILLING CODE 8026–03–P

SURFACE TRANSPORTATION BOARD

30-Day Notice of Intent To Seek Extension of Approval for Information Collection: Rail Service Data

AGENCY: Surface Transportation Board.

ACTION: Notice and request for comments.

SUMMARY: As required by the Paperwork Reduction Act of 1995 (PRA), the Surface Transportation Board (STB or Board) gives notice of its intent to seek approval from the Office of Management and Budget (OMB) for an extension of the information collection of Rail Service Data, as described below. The Board previously published a notice about this collection in the **Federal Register**. That notice allowed for a 60-day public review and comment period. No comments were received.

DATES: The comment period for the notice published September 2, 2020, at 85 FR 54614, is extended. Comments on this information collection should be submitted by December 3, 2020.

ADDRESSES: Written comments should be identified as ''Paperwork Reduction Act Comments, Rail Service Data.'' These comments should be directed to the Office of Management and Budget, Office of Information and Regulatory

Affairs, Attention: Michael J. McManus, Surface Transportation Board Desk Officer: by email at *oira_submission@omb.eop.gov;* by fax at (202) 395–1743; or by mail to Room 10235, 725 17th Street NW, Washington, DC 20503. Please also direct comments to Chris Oehrle, PRA Officer, Surface Transportation Board, at *PRA@stb.gov*. For further information regarding this collection, contact Michael Higgins, Deputy Director, Office of Public Assistance, Governmental Affairs, and Compliance at (202) 245–0284 and at *Michael.Higgins@stb.gov.* Assistance for the hearing impaired is available through the Federal Relay Service at (800) 877–8339.

SUPPLEMENTARY INFORMATION: Comments are requested concerning: (1) The accuracy of the Board's burden estimates; (2) ways to enhance the quality, utility, and clarity of the information collected; (3) ways to minimize the burden of the collection of information on the respondents, including the use of automated collection techniques or other forms of information technology, when appropriate; and (4) whether the collection of information is necessary for the proper performance of the functions of the Board, including whether the collection has practical utility. Submitted comments will be summarized and included in the Board's request for OMB approval.

Description of Collection

Title: Rail Service Data Collection.

OMB Control Number: 2140–0033.

STB Form Number: None.

Type of Review: Extension without change.

Respondents: Class I railroads (on behalf of themselves and the Chicago Transportation Coordination Office (''CTCO'')).

Number of Respondents: Seven.

Estimated Time per Response: The collection seeks three related responses, as indicated in the table below.

TABLE—ESTIMATED TIME PER RESPONSE

Type of responses	Estimated time per response (hours)
Weekly	1.5
Quarterly	1.5
On occasion	1.5

Frequency: The frequencies of the collection are set forth in the table below.

TABLE—FREQUENCY OF RESPONSES

Type of responses	Frequency of responses (year)
Weekly	52
Quarterly	4
On occasion	2

Total Burden Hours (annually including all respondents): The total annual burden hours are estimated to be no more than 591 hours per year, as indicated in the table below.

TABLE—TOTAL BURDEN HOURS

[per year]

Type of responses	Number of respondents	Estimated time per response (hours)	Frequency of responses (year)	Total yearly burden hours
Weekly	7	1.5	52	546
Quarterly	7	1.5	4	42
On occasion	1	1.5	2	3
Total				591

Total ''Non-hour Burden'' Cost: There are no other costs identified because filings are submitted electronically to the Board.

Needs and Uses: Under 49 CFR Part 1250, the Board requires the nation's seven Class I (large) railroads and the Chicago Transportation Coordination Office (CTCO), through its Class I members, to report certain railroad service performance metrics on a weekly basis and certain other information on a quarterly and occasional basis. This collection of rail service data aids the Board in identifying rail service issues, allowing the Board to better understand current service issues and to identify and address potential future regional and national service disruptions more quickly. The transparency resulting from this collection also benefits rail shippers and other stakeholders by helping them to better plan operations and make informed decisions based on publicly available, near real-time data and their own analysis of performance trends over time.

Under the PRA, a federal agency that conducts or sponsors a collection of information must display a currently valid OMB control number. A collection of information, which is defined in 44 U.S.C. 3502(3) and 5 CFR 1320.3(c), includes agency requirements that persons submit reports, keep records, or provide information to the agency, third parties, or the public. Section 3507(b) of the PRA requires, concurrent with an agency's submitting a collection to OMB for approval, a 30-day notice and comment period through publication in the **Federal Register** concerning each proposed collection of information, including each proposed extension of an existing collection of information.

Dated: October 29, 2020.

Tammy Lowery,

Clearance Clerk.

[FR Doc. 2020–24340 Filed 11–2–20; 8:45 am]

BILLING CODE 4915–01–P

SURFACE TRANSPORTATION BOARD

[Docket No. AB 290 (Sub-No. 407X)]

Norfolk Southern Railway Company—Abandonment Exemption—in Bergen County, NJ

On October 14, 2020, Norfolk Southern Railway Company (NSR) filed with the Surface Transportation Board (Board) a petition under 49 U.S.C. 10502 for exemption from the prior approval requirements of 49 U.S.C. 10903 to abandon an approximately 1.2-mile rail line in Bergen County, NJ (the Line). The Line extends from milepost UQ 9.0 to milepost UQ 10.2 and traverses U.S.

Postal Service Zip Codes 07070 and 07073.

NSR states that it is seeking to abandon the Line because the Line has been dormant for more than two decades.[1] (Pet. 2–3, 12.) According to NSR, it plans to convey the Line's right-of-way to Open Space Institute Land Trust, Inc. (OSI), and ultimately to Bergen County, so that the Line may be used for a public redevelopment project. (*Id.* at 2, 14.) NSR states that OSI, in partnership with Bergen County, plans to redevelop the Line, create greenways, and provide for alternative modal access to various sites located along the Line. (*Id.* at 2, 4, 10.)

In addition to an exemption from 49 U.S.C. 10903, NSR also seeks an exemption from the offer of financial assistance procedures of 49 U.S.C. 10904. In support, NSR states that the Line is needed for a valid public purpose, *i.e.,* the redevelopment project, and there is no overriding public need for continued freight rail service along the Line. (Pet. 15.) According to NSR, the reinstitution of freight rail service under section 10904 would be incompatible with the intended use of the Line by OSI and Bergen County. (*Id.*) This request will be addressed in the final decision.

NSR states that, based on the information in its possession, the Line does not contain federally granted rights-of-way. (*Id.* at 3.) Any documentation in NSR's possession will be made available promptly to those requesting it.

The interest of railroad employees will be protected by the conditions set forth in *Oregon Short Line Railroad—Abandonment Portion Goshen Branch between Firth & Ammon, in Bingham & Bonneville Counties, Idaho,* 360 I.C.C. 91 (1979).

By issuing this notice, the Board is instituting an exemption proceeding pursuant to 49 U.S.C. 10502(b). A final decision will be issued by February 1, 2021.

Any offer of financial assistance (OFA) under 49 CFR 1152.27(b)(2) will be due no later than 120 days after the filing of the petition for exemption, or 10 days after service of a decision granting the petition for exemption, whichever occurs sooner. Persons interested in submitting an OFA must first file a formal expression of intent to file an offer by November 13, 2020, indicating the type of financial assistance they wish to provide (*i.e.,* subsidy or purchase) and demonstrating that they are preliminarily financially responsible. *See* 49 CFR 1152.27(c)(1)(i).

Following abandonment, the Line may be suitable for other public use, including interim trail use. Any request for a public use condition under 49 CFR 1152.28 or for interim trail use/rail banking under 49 CFR 1152.29 will be due no later than November 23, 2020.[2]

All pleadings, referring to Docket No. AB 290 (Sub-No. 407X), should be filed with the Surface Transportation Board via e-filing on the Board's website. In addition, a copy of each pleading must be served on NSR's representative, William A. Mullins, Baker & Miller PLLC, 2401 Pennsylvania Ave. NW, Suite 300, Washington, DC 20037. Replies to the petition are due on or before November 23, 2020.

Persons seeking further information concerning abandonment procedures may contact the Board's Office of Public Assistance, Governmental Affairs, and Compliance at (202) 245–0238 or refer to the full abandonment regulations at 49 CFR part 1152. Questions concerning environmental issues may be directed to the Board's Office of Environmental Analysis (OEA) at (202) 245–0305. Assistance for the hearing impaired is available through the Federal Relay Service at (800) 877–8339.

An environmental assessment (EA) (or environmental impact statement (EIS), if necessary) prepared by OEA will be served upon all parties of record and upon any other agencies or persons who comment during its preparation. Other interested persons may contact OEA to obtain a copy of the EA (or EIS). EAs in abandonment proceedings normally will be made available within 60 days of the filing of the petition. The deadline for submission of comments on the EA generally will be within 30 days of its service.

Board decisions and notices are available at *www.stb.gov.*

Decided: October 28, 2020.

By the Board, Allison C. Davis, Director, Office of Proceedings.

Kenyatta Clay,

Clearance Clerk.

[FR Doc. 2020–24245 Filed 11–2–20; 8:45 am]

BILLING CODE 4915–01–P

[1] NSR states that it has served no customers on the Line since it acquired the property from the Consolidated Rail Corporation in 1999. (Pet. 3.)

[2] According to NSR, because it plans to sell the Line to OSI (and ultimately Bergen County), it is unwilling to negotiate for interim trail use. (Pet. 14.) Nevertheless, filing fees for OFAs and trail use requests can be found at 49 CFR 1002.2(f)(25) and (27), respectively.

DEPARTMENT OF TRANSPORTATION

Federal Motor Carrier Safety Administration

[Docket No. FMCSA–2020–0027]

Qualification of Drivers; Exemption Applications; Hearing

AGENCY: Federal Motor Carrier Safety Administration (FMCSA), DOT.

ACTION: Notice of final disposition.

SUMMARY: FMCSA announces its decision to exempt 21 individuals from the hearing requirement in the Federal Motor Carrier Safety Regulations (FMCSRs) to operate a commercial motor vehicle (CMV) in interstate commerce. The exemptions enable these hard of hearing and deaf individuals to operate CMVs in interstate commerce.

DATES: The exemptions are applicable on October 30, 2020. The exemptions expire on October 30, 2022.

FOR FURTHER INFORMATION CONTACT: Ms. Christine A. Hydock, Chief, Medical Programs Division, (202) 366–4001, *fmcsamedical@dot.gov,* FMCSA, Department of Transportation, 1200 New Jersey Avenue SE, Room W64–224, Washington, DC 20590–0001. Office hours are from 8:30 a.m. to 5 p.m., ET, Monday through Friday, except Federal holidays. If you have questions regarding viewing or submitting material to the docket, contact Dockets Operations, (202) 366–9826.

SUPPLEMENTARY INFORMATION:

I. Public Participation

A. Viewing Documents and Comments

To view comments, as well as any documents mentioned in this notice as being available in the docket, go to *http://www.regulations.gov/docket?D=FMCSA-2020-0027* and choose the document to review. If you do not have access to the internet, you may view the docket online by visiting Dockets Operations in Room W12–140 on the ground floor of the DOT West Building, 1200 New Jersey Avenue SE, Washington, DC 20590, between 9 a.m. and 5 p.m., ET, Monday through Friday, except Federal holidays. To be sure someone is there to help you, please call (202) 366–9317 or (202) 366–9826 before visiting Dockets Operations.

B. Privacy Act

In accordance with 5 U.S.C. 553(c), DOT solicits comments from the public to better inform its rulemaking process. DOT posts these comments, without edit, including any personal information the commenter provides, to *www.regulations.gov,* as described in

the system of records notice (DOT/ALL–14 FDMS), which can be reviewed at *www.transportation.gov/privacy.*

II. Background

On September 23, 2020, FMCSA published a notice announcing receipt of applications from 21 individuals requesting an exemption from the hearing requirement in 49 CFR 391.41(b)(11) to operate a CMV in interstate commerce and requested comments from the public (85 FR 59851). The public comment period ended on October 23, 2020, and no comments were received.

FMCSA has evaluated the eligibility of these applicants and determined that granting exemptions to these individuals would achieve a level of safety equivalent to, or greater than, the level that would be achieved by complying with § 391.41(b)(11).

The physical qualification standard for drivers regarding hearing found in § 391.41(b)(11) states that a person is physically qualified to drive a CMV if that person first perceives a forced whispered voice in the better ear at not less than 5 feet with or without the use of a hearing aid or, if tested by use of an audiometric device, does not have an average hearing loss in the better ear greater than 40 decibels at 500 Hz, 1,000 Hz, and 2,000 Hz with or without a hearing aid when the audiometric device is calibrated to American National Standard (formerly ASA Standard) Z24.5—1951.

This standard was adopted in 1970 and was revised in 1971 to allow drivers to be qualified under this standard while wearing a hearing aid, 35 FR 6458, 6463 (April 22, 1970) and 36 FR 12857 (July 3, 1971).

III. Discussion of Comments

FMCSA received no comments in this proceeding.

IV. Basis for Exemption Determination

Under 49 U.S.C. 31136(e) and 31315(b), FMCSA may grant an exemption from the FMCSRs for no longer than a 5-year period if it finds such exemption would likely achieve a level of safety that is equivalent to, or greater than, the level that would be achieved absent such exemption. The statute also allows the Agency to renew exemptions at the end of the 5-year period. FMCSA grants medical exemptions from the FMCSRs for a 2-year period to align with the maximum duration of a driver's medical certification.

The Agency's decision regarding these exemption applications is based on current medical information and literature, and the 2008 Evidence Report, ''Executive Summary on Hearing, Vestibular Function and Commercial Motor Driving Safety.'' The evidence report reached two conclusions regarding the matter of hearing loss and CMV driver safety: (1) No studies that examined the relationship between hearing loss and crash risk exclusively among CMV drivers were identified; and (2) evidence from studies of the private driver's license holder population does not support the contention that individuals with hearing impairment are at an increased risk for a crash. In addition, the Agency reviewed each applicant's driving record found in the Commercial Driver's License Information System, for commercial driver's license (CDL) holders, and inspections recorded in the Motor Carrier Management Information System. For non-CDL holders, the Agency reviewed the driving records from the State Driver's Licensing Agency. Each applicant's record demonstrated a safe driving history. Based on an individual assessment of each applicant that focused on whether an equal or greater level of safety is likely to be achieved by permitting each of these drivers to drive in interstate commerce as opposed to restricting him or her to driving in intrastate commerce, the Agency believes the drivers granted this exemption have demonstrated that they do not pose a risk to public safety.

Consequently, FMCSA finds that in each case exempting these applicants from the hearing standard in § 391.41(b)(11) is likely to achieve a level of safety equal to that existing without the exemption.

V. Conditions and Requirements

The terms and conditions of the exemption are provided to the applicants in the exemption document and includes the following: (1) Each driver must report any crashes or accidents as defined in § 390.5; (2) each driver must report all citations and convictions for disqualifying offenses under 49 CFR 383 and 49 CFR 391 to FMCSA; and (3) each driver is prohibited from operating a motorcoach or bus with passengers in interstate commerce. The driver must also have a copy of the exemption when driving, for presentation to a duly authorized Federal, State, or local enforcement official. In addition, the exemption does not exempt the individual from meeting the applicable CDL testing requirements.

VI. Preemption

During the period the exemption is in effect, no State shall enforce any law or regulation that conflicts with this exemption with respect to a person operating under the exemption.

VII. Conclusion

Based upon its evaluation of the 21 exemption applications, FMCSA exempts the following drivers from the hearing standard, § 391.41(b)(11), subject to the requirements cited above:

Joel Alfaro (FL)
Adrian Almanza (IL)
Jimmy Benavides (TX)
James Bryan (AR)
Richard Clark (ID)
Jules Garcia (IL)
Calvin Gousby (NV)
Nicholas Gramarossa (IN)
William Heath (NC)
Ryan King (NC)
Alexander Lowe (WA)
Kenneth Morrison (NY)
Darren Norton (MO)
Raphael Pittenger (WA)
Marty Posey (IN)
David Sanders (IL)
Muhammad Shafi (IL)
Nolen Soler (NE)
Donald Taylor (NC)
Anthony Vasquez (TX)
Daniel Zeolla (PA)

In accordance with 49 U.S.C. 31315(b), each exemption will be valid for 2 years from the effective date unless revoked earlier by FMCSA. The exemption will be revoked if the following occurs: (1) The person fails to comply with the terms and conditions of the exemption; (2) the exemption has resulted in a lower level of safety than was maintained prior to being granted; or (3) continuation of the exemption would not be consistent with the goals and objectives of 49 U.S.C. 31136(e) and 31315(b).

Larry W. Minor,

Associate Administrator for Policy.

[FR Doc. 2020–24278 Filed 11–2–20; 8:45 am]

BILLING CODE 4910–EX–P

DEPARTMENT OF TRANSPORTATION

Federal Motor Carrier Safety Administration

[Docket No. FMCSA–2020–0203]

Agency Information Collection Activities; New Information Collection

AGENCY: Federal Motor Carrier Safety Administration, DOT.

ACTION: Notice and request for comments.

SUMMARY: In accordance with the Paperwork Reduction Act of 1995, Federal Motor Carrier Safety

Administration (FMCSA) announces its plan to submit the Information Collection Request (ICR) described below to the Office of Management and Budget (OMB) for its review and approval and invites public comment. This notice invites comment on a proposed information collection project titled *Trucking Fleet Concept of Operations (CONOPS) for Managing Mixed Fleets.* It is a survey study that will assess the self-reports of approximately 2,000 survey respondents, including commercial motor vehicle (CMV) fleet managers, CMV sales personnel, State and Federal government personnel, industry engineers, researchers, and CMV drivers. The questionnaire is designed to collect baseline opinions of automated driving systems (ADS) before and after hands-on demonstrations with ADS technologies.

DATES: We must receive your comments on or before January 4, 2021.

ADDRESSES: You may submit comments identified by Federal Docket Management System (FDMS) Docket Number FMCSA–2020–0203 using any of the following methods:

- *Federal eRulemaking Portal: http://www.regulations.gov.* Follow the online instructions for submitting comments.
- *Fax:* 1–202–493–2251.
- *Mail:* Docket Operations; U.S. Department of Transportation, 1200 New Jersey Avenue SE, West Building, Ground Floor, Room W12–140, Washington, DC 20590–0001.
- *Hand Delivery or Courier:* U.S. Department of Transportation, 1200 New Jersey Avenue SE, West Building, Ground Floor, Room W12–140, Washington, DC 20590–0001 between 9 a.m. and 5 p.m. e.t., Monday through Friday, except Federal holidays.

Instructions: All submissions must include the Agency name and docket number. For detailed instructions on submitting comments, see the Public Participation heading below. Note that all comments received will be posted without change to *http://www.regulations.gov,* including any personal information provided. Please see the Privacy Act heading below.

Dockets: For access to the docket to read background documents or comments received, go to *http://www.regulations.gov,* and follow the online instructions for accessing the dockets, or go to the street address listed above.

Privacy Act: In accordance with 5 U.S.C. 553(c), DOT solicits comments from the public to better inform its rulemaking process. DOT posts these comments, without edit, including any personal information the commenter provides, to *www.regulations.gov,* as described in the system of records notice (DOT/ALL–14 FDMS), which can be reviewed at *www.dot.gov/privacy.*

Public Participation: The Federal eRulemaking Portal is available 24 hours each day, 365 days each year. You can obtain electronic submission and retrieval help and guidelines under the ''help'' section of the Federal eRulemaking Portal website. If you want us to notify you that we received your comments, please include a self-addressed, stamped envelope or postcard, or print the acknowledgement page that appears after submitting comments online. Comments received after the comment closing date will be included in the docket and will be considered to the extent practicable.

FOR FURTHER INFORMATION CONTACT: Thomas Kelly, Technology Division, Department of Transportation, FMCSA, West Building 6th Floor, 1200 New Jersey Avenue SE, Washington, DC 20590. Telephone: 202–480–5240; email *Thomas.Kelly@dot.gov*.

SUPPLEMENTARY INFORMATION:

Background: Although ADS-equipped trucks hold the promise of increased safety, productivity, and efficiency, it is not clear how these vehicles should be integrated into fleet operations with conventional trucks for mixed-fleet operations. Reflecting this issue is a question frequently asked by trucking executives: *How can I integrate ADS into my fleet operations?* FMCSA needs information from truck industry representatives regarding their opinions and perception of ADS.

The introduction of ADS technology on heavy trucks (Class 8 vehicles) will profoundly affect all commerce in the U.S., as the U.S. moves more than 70% of all goods by truck. However, existing stakeholders in the road freight ecosystem (primarily for-hire and private truck fleets, but also shippers, brokers, truck manufacturers, and service and maintenance providers) do not have a clear picture of how they will implement ADS in their daily operations. At present, technical progress in this nascent but promising technology is outstripping the ability of truck fleets to keep up and plan for ADS deployment. This may adversely affect adoption by truck fleets and associated industries, resulting in the delayed achievement of safety, productivity, and efficiency benefits of ADS-equipped trucks. If ADS technology is to gain traction in the U.S. trucking industry, current stakeholders and new entrants need a rigorous, data driven CONOPS.

This project focuses on the development and demonstration of a CONOPS for ADS-equipped trucks, which will ensure the results translate directly to real-world settings that are of practical importance to the trucking industry, regulators, and the public at large. Part of the development of CONOPS includes a series of outreach events where the public, with a focus on truck drivers and truck fleet managers, will have the opportunity to meet ADS technology developers and original equipment manufacturers. The outreach will also provide opportunities to participate in hands-on technology demonstrations, such as in-vehicle demonstrations and closed-course scenarios. Lessons learned from this demonstration will influence all three phases of the research to ensure the CONOPS developed is true to real-life fleet operations. Thus, the purpose of the hands-on demonstrations: (1) Expose truck fleet managers and other personnel, truck drivers, government officials, insurance and inspection personnel, and the general public to ADS; (2) collect valuable qualitative data on participants' opinions and perceptions regarding ADS; and (3) use the data to ensure the CONOPS covers major industry concerns.

Data will be collected from CMV drivers, CMV fleet managers, industry engineers, CMV sales personnel, researchers, and State and Federal government personnel at four roadshows. The roadshows will coincide with large conferences, such as the Technology Maintenance Council (TMC) Annual Meeting, North American Commercial Vehicle Show, SAE COMVEC, and Automated Vehicle Symposium. The questionnaire data collected in Phase I of the study (pre-roadshow) will allow us to gather baseline opinions regarding ADS technologies. Once they participate in the hands-on demonstrations at the roadshow, we will see if their opinions on the technologies have changed (Phase 2 or post-roadshow).

The research team will use cell phones to collect participant data (adhering to cleaning procedures between each participant). The pre- and post-study questionnaires will be loaded onto a cell phone which will be distributed to participants at the beginning (and end) of the roadshow. Each questionnaire will be loaded in an app format. Once the participants submit their answers, the data will be stored on the phone and will not be accessible until researchers download the data to a computer.

FMCSA conducted a pilot test with some of the proposed end-users. This

pilot test included six end users, two researchers, one government employee, one commercial/motor vehicle fleet representative, and two commercial driver's license holders. Participants completed the Pre-Roadshow Questionnaire and Post-Roadshow Questionnaire, timing completion of each and reviewing for content and/or comprehension issues. Based on this pilot test, FMCSA revised the Pre-Roadshow Questionnaire and Post-Roadshow Questionnaire. Pilot test participants indicated mean completion times of 3.5 minutes and 4.4 minutes for the Pre-Roadshow Questionnaire and Post Roadshow Questionnaire, respectively.

Title: Trucking Fleet Concept of Operations (CONOPS) for Managing Mixed Fleets.

OMB Control Number: 2126–00XX.

Type of Request: New collection.

Respondents: CMV fleet managers, CMV sales personnel, State and Federal government personnel, industry engineers, researchers, and CMV drivers.

Estimated Number of Respondents: 2,000 total respondents (675 CMV fleet managers, 150 CMV sales personnel, 600 Industry Engineers, 100 CMV Drivers, 325 State and Federal government, and 150 Researchers).

Estimated Time per Response: 3.5 minutes for the Pre-Roadshow Questionnaire and 4.4 minutes for the Post-Roadshow Questionnaire.

Expiration Date: This is a new ICR.

Frequency of Response: On occasion (if attending one of four roadshows).

Estimated Total Annual Burden: 175 hours.

ESTIMATED ANNUALIZED BURDEN HOURS

Task	Respondents	Responses per respondent	Annualized total responses	Burden per response (minutes)	Annualized total burden hours *
Pre-roadshow Questionnaire: CMV Fleet Managers	675	1	455.5	3.5	26.6
Post-roadshow Questionnaire: CMV Fleet Managers	675	1	455.5	4.4	33.4
Pre-roadshow Questionnaire: Industry Engineers	600	1	396	3.5	23.1
Post-roadshow Questionnaire: Industry Engineers	600	1	396	4.4	29
Pre-roadshow Questionnaire: CMV Sales Personnel	150	1	99	3.5	5.8
Post-roadshow Questionnaire: CMV Sales Personnel	150	1	99	4.4	7.3
Pre-roadshow Questionnaire: CMV Drivers	100	1	66	3.5	3.9
Post-roadshow Questionnaire: CMV Drivers	100	1	66	4.4	4.8
Pre-roadshow Questionnaire: State and Federal Personnel	325	1	214.5	3.5	12.5
Post-roadshow Questionnaire: State and Federal Personnel	325	1	214.5	4.4	15.7
Pre-roadshow Questionnaire: Researchers	150	1	99	3.5	5.8
Post-roadshow Questionnaire: Researchers	150	1	99	4.4	7.3
Annualized Total *			2,660		175
Study Total **			3,990		263

* Total may not equal the sum of previous items due to rounding.
** The research team plans to collect data from a maximum of 2,000 respondents over 18 months.

Public Comments Invited: You are asked to comment on any aspect of this information collection, including: (1) Whether the proposed collection is necessary for the performance of FMCSA's functions; (2) the accuracy of the estimated burden; (3) ways for FMCSA to enhance the quality, usefulness, and clarity of the collected information; and (4) ways that the burden could be minimized without reducing the quality of the collected information. The agency will summarize or include your comments in the request for OMB's clearance of this information collection.

Issued under the authority of 49 CFR 1.87.

Tom Keane,

Associate Administrator, Office of Research, Technology and Registration.

[FR Doc. 2020–24247 Filed 11–2–20; 8:45 am]

BILLING CODE 4910–EX–P

DEPARTMENT OF THE TREASURY

Alcohol and Tobacco Tax and Trade Bureau

[Docket No. TTB–2020–0001]

Proposed Information Collections; Comment Request (No. 81)

AGENCY: Alcohol and Tobacco Tax and Trade Bureau (TTB); Treasury.

ACTION: Notice and request for comments.

SUMMARY: As part of our continuing effort to reduce paperwork and respondent burden, and as required by the Paperwork Reduction Act of 1995, we invite comments on the proposed or continuing information collections listed below in this notice.

DATES: We must receive your written comments on or before January 4, 2021.

ADDRESSES: You may send comments on the information collections described in this document using one of the two methods described below—

- *Internet:* To submit comments electronically, use the comment form for this document posted on the ''*Regulations.gov*'' e-rulemaking website at *https://www.regulations.gov* within Docket No. TTB–2019–0001.
- *Mail:* Send comments to the Paperwork Reduction Act Officer, Regulations and Rulings Division, Alcohol and Tobacco Tax and Trade Bureau, 1310 G Street NW, Box 12, Washington, DC 20005.

Please submit separate comments for each specific information collection described in this document. You must reference the information collection's title, form or recordkeeping requirement number, and OMB control number (if any) in your comment.

You may view copies of this document, the listed TTB forms, and all comments received at *https://www.regulations.gov* within Docket No. TTB–2019–0001. TTB has posted a link to that docket on its website at *https://www.ttb.gov/forms/comment-on-form.shtml*. You also may obtain paper copies of this document, the listed

forms, and any comments received by contacting TTB's Paperwork Reduction Act Officer at the addresses or telephone number shown below.

FOR FURTHER INFORMATION CONTACT: Michael Hoover, Regulations and Rulings Division, Alcohol and Tobacco Tax and Trade Bureau, 1310 G Street NW, Box 12, Washington, DC 20005; 202–453–1039, ext. 135; or *informationcollections@ttb.gov* (please do not submit comments to this email address).

SUPPLEMENTARY INFORMATION:

Request for Comments

The Department of the Treasury and its Alcohol and Tobacco Tax and Trade Bureau (TTB), as part of their continuing effort to reduce paperwork and respondent burden, invite the general public and other Federal agencies to comment on the proposed or continuing information collections described below, as required by the Paperwork Reduction Act of 1995 (44 U.S.C. 3501 *et seq.*).

Comments submitted in response to this document will be included or summarized in our request for Office of Management and Budget (OMB) approval of the relevant information collection. All comments are part of the public record and subject to disclosure. Please do not include any confidential or inappropriate material in your comments.

We invite comments on: (a) Whether an information collection is necessary for the proper performance of the agency's functions, including whether the information has practical utility; (b) the accuracy of the agency's estimate of the information collection's burden; (c) ways to enhance the quality, utility, and clarity of the information collected; (d) ways to minimize the information collection's burden on respondents, including through the use of automated collection techniques or other forms of information technology; and (e) estimates of capital or start-up costs and costs of operation, maintenance, and purchase of services to provide the requested information.

An agency may not conduct or sponsor, and a person is not required to respond to, a collection of information unless the collection of information has a valid OMB control number.

Information Collections Open for Comment

Currently, we are seeking comments on the following forms, letterhead applications or notices, recordkeeping requirements, questionnaires, or surveys:

OMB Control No. 1513–0019

Title: Application for Amended Basic Permit under the Federal Alcohol Administration Act.

TTB Form Numbers: TTB F 5100.18.

Abstract: The Federal Alcohol Administration Act (FAA Act), at 27 U.S.C. 203, requires that a person apply for and receive a permit, known as a ''basic permit,'' to: (1) Import distilled spirits, wine, or malt beverages into the United States; (2) distill spirits or produce wine, rectify or blend distilled spirits or wine, or bottle and/or warehouse distilled spirits; or (3) purchase distilled spirits, wine, or malt beverages for resale at wholesale. The FAA Act, at 27 U.S.C. 204, also imposes certain requirements for basic permits and authorizes the Secretary of the Treasury (the Secretary) to prescribe the manner and form of all applications for basic permits. The TTB regulations in 27 CFR part 1 provide for the amendment of a basic permit using form TTB F 5100.18 when changes occur to the name, trade name, address, ownership, management, or control of the business. The collected information assists TTB in maintaining accurate information identifying the business and its location, and determining whether an applicant for an amended basic permit meets the statutory criteria for holding such a permit under the FAA Act.

Current Actions: There are no program changes associated with this information collection, and TTB is submitting it for extension purposes only. As for adjustments, due to changes in agency estimates, TTB is increasing the number of annual respondents, responses, and burden hours associated with this collection.

Type of Review: Extension of a currently approved collection.

Affected Public: Businesses or other for-profits.

Estimated Annual Burden

- *Number of Respondents:* 8,550.
- *Average Responses per Respondent:* 1 (one).
- *Number of Responses:* 8,550.
- *Average per-response Burden:* 23 minutes.
- *Total Burden:* 3,278 hours.

OMB Control No. 1513–0028

Title: Application for an Industrial Alcohol User Permit.

TTB Form Number: TTB F 5150.22.

Abstract: The Internal Revenue Code (IRC) at 26 U.S.C. 5271 authorizes the Secretary to prescribe regulations requiring persons using tax-free alcohol for certain nonbeverage purposes (hospitals, laboratories, research centers, etc.) and persons using or dealing in specially denatured spirits (alcohol and/or rum) to apply for and receive a permit to do so prior to commencing business. Under that authority, the TTB regulations specify the use of TTB F 5150.22 as the application form for permits to deal in or use specially denatured spirits (alcohol/rum) (see 27 CFR 20.41), or to use tax-free alcohol for nonbeverage purposes (see 27 CFR 22.41). TTB uses the collected information to identify the applicant and the location of their business or entity, and to determine if the applicant is eligible to deal in or use specially denatured or use tax-free alcohol, and if the proposed operations conform to Federal laws and regulations.

Current Actions: There are no program changes associated with this information collection, and TTB is submitting it for extension purposes only. As for adjustments, due to changes in agency estimates, TTB is increasing the number of annual respondents, responses, and burden hours for this collection.

Type of Review: Extension of a currently approved collection.

Affected Public: Businesses or other for-profits; State and local governments.

Estimated Annual Burden

- *Number of Respondents:* 2,710.
- *Average Responses per Respondent:* 1 (one).
- *Number of Responses:* 2,710.
- *Average per-response Burden:* 0.7 hour.
- *Total Burden:* 1,897.

OMB Control No. 1513–0033

Title: Report—Manufacturer of Tobacco Products or Cigarette Papers and Tubes; Report—Manufacturer of Processed Tobacco.

TTB Form Number: TTB F 5210.5 and TTB F 5250.1.

Abstract: The IRC at 26 U.S.C. 5722 requires manufacturers of tobacco products, cigarette papers and tubes, or processed tobacco to make reports containing such information, in such form, at such times, and for such periods as the Secretary prescribes by regulation. The TTB regulations at 27 CFR 40.202, 40.422, and 40.522 prescribe the use of TTB F 5210.5 to report information about tobacco products and cigarette papers and tubes manufactured, received, and removed per month, and the use of TTB F 5250.1 to report information about processed tobacco manufactured, received, and removed per month. TTB uses the collected information to ensure that manufacturers have properly paid

Federal excise taxes and are in compliance with applicable Federal law and regulations.

Current Actions: There are no program changes or adjustments associated with this information collection, and TTB is submitting it for extension purposes only.

Type of Review: Extension of a currently approved collection.

Affected Public: Businesses and other for-profits.

Estimated Annual Burden

- *Number of Respondents:* 235.
- *Average Responses per Respondent:* 2,820.
- *Number of Responses:* 12.
- *Average per-response Burden:* 1 hour.
- *Total Burden:* 2,820 hours.

OMB Control No. 1513–0034

Title: Schedule of Tobacco Products, Cigarette Papers or Tubes Withdrawn from the Market.

TTB Form Number: TTB F 5200.7.

Abstract: The IRC at 26 U.S.C. 5705 provides that a manufacturer or importer may receive credit for or refund of the Federal excise taxes paid on tobacco products, cigarette papers, or cigarette tubes withdrawn from the market if the Secretary is provided with satisfactory proof of the withdrawal. Under that IRC authority, the TTB regulations provide for the use of TTB F 5200.7 to identify tobacco products, cigarette papers, or cigarette tubes to be withdrawn from the market and the location of those articles. The form also documents the taxpayer's planned disposition of the articles (destroyed, reduced to materials, or returned to bond), and TTB's decision to witness or not witness that disposition. Taxpayers then file the completed TTB F 5200.7 to support their subsequent claim for credit or refund of the excise taxes paid on the withdrawn articles. The collected information is necessary to protect the revenue as it allows TTB to determine if such a claim is valid.

Current Actions: There are no program changes or adjustments associated with this information collection, and TTB is submitting it for extension purposes only.

Type of Review: Extension of a currently approved collection.

Affected Public: Businesses or other for-profits.

Estimated Annual Burden

- *Number of Respondents:* 50.
- *Average Responses per Respondent:* 5.
- *Number of Responses:* 250.
- *Average per-response Burden:* 0.75 hour.
- *Total Burden:* 188 hours.

OMB Control No. 1513–0064

Title: Importer's Records and Reports (TTB REC 5170/1).

TTB Recordkeeping Number: TTB REC 5170/1.

Abstract: Pursuant to chapter 51 of the IRC (26 U.S.C.) and the FAA Act at 27 U.S.C. 201 *et seq.,* TTB regulates, among other things, the importation of distilled spirits, wine, and malt beverages. Pursuant to chapter 52 of the IRC (26 U.S.C.) TTB also regulates the importation of tobacco products, processed tobacco, and cigarette papers and tubes. Those statutory provisions are the basis of the TTB alcohol and tobacco regulations that require importers of those products to obtain permits and to submit certain information upon importation. Customs and Border Protection (CBP) and TTB use the information collected under this request to ensure that alcohol and tobacco product importers have the required permits, have paid the applicable taxes, and that commodities released from customs custody without payment of tax for transfer to a bonded facility are eligible for such release. TTB also uses this collection to ensure that imported alcohol product labels comply with FAA Act requirements. The reporting provisions allow for the submission of import-related information electronically along with the electronic submission of entry information to CBP. In addition, TTB uses the letterhead applications covered under this collection to evaluate requests to vary from the regulatory provisions. The collected information is necessary to ensure applicable tax revenue is paid and that alcohol and tobacco importers comply with Federal laws and regulations.

Current Actions: There are no program changes associated with this information collection, and TTB is submitting it for extension purposes only. As for adjustments, due to changes in agency estimates, TTB is decreasing the number of annual respondents, responses, and burden hours associated with this collection.

Type of Review: Extension of a currently approved collection.

Affected Public: Businesses or other for-profits.

Estimated Annual Burden

- *Number of Respondents:* 10,550.
- *Average Responses per Respondent:* 6 (one).
- *Number of Responses:* 63,300.
- *Average per-response Burden:* 0.33 hour.
- *Total Burden:* 20,889 hours.

OMB Control No. 1513–0069

Title: Tobacco Products Manufacturers—Supporting Records for Removals for the Use of the United States.

Abstract: Under the IRC at 26 U.S.C. 5701, tobacco products and cigarette papers and tubes manufactured in or imported into the United States are subject to a Federal excise tax, and, under 26 U.S.C. 5741, all such manufacturers and importers must keep the records the Secretary prescribes by regulation. The IRC at 26 U.S.C. 5704(b) provides that manufacturers may remove such articles, without payment of tax, ''for use of the United States'' under regulations issued by the Secretary. Under those IRC authorities, the TTB regulations at 27 CFR 45.51 requires manufacturers to keep records that include information regarding the date of removal, the name and address of the receiving Federal agency, the kind and quantity of products removed, and, for large cigars, the sale price. The required records also must detail any such items that the agency returns to the manufacturer. The required records are necessary to ensure that products removed without payment of tax are delivered to a Federal agency for the authorized tax-exempt use.

Current Actions: There are no program changes or adjustments associated with this information collection, and TTB is submitting it for extension purposes only.

Type of Review: Extension of a currently approved collection.

Affected Public: Businesses or other for-profits.

Estimated Annual Burden

- *Number of Respondents:* 205.
- *Average Responses per Respondent:* 1 (one).
- *Number of Responses:* 205.
- *Average per-response Burden:* 1 hour.
- *Total Burden:* 205 hours.

OMB Control No. 1513–0073

Title: Manufacturers of Nonbeverage Products—Records to Support Claims for Drawback (TTB REC 5530/2).

TTB Recordkeeping Number: TTB REC 5530/2.

Abstract: The IRC at 26 U.S.C.5001 imposes Federal excise tax on distilled spirits produced or imported into the United States. The IRC at 26 U.S.C. 5111–5114, allows manufacturers of certain ''nonbeverage'' products that are unfit for beverage use—medicines, medicinal preparations, food products, flavors, flavoring extracts, or perfume—to claim drawback (refund) of all but

$1.00 per proof gallon of the excise tax paid on the distilled spirits used in the production of such products. Under these IRC authorities, TTB has issued regulations governing nonbeverage product drawback claims, contained in 27 CFR part 17, which includes a requirement to keep source records supporting such claims. The required records document the distilled spirits received, taxes paid, date used, the quantity and kind used in each product, other ingredients received and used (to validate formula compliance), amount of alcohol recovered, quantity of intermediate products transferred to other plants, and the disposition or purchaser of the products. The collected information helps prevent fraudulent claims and the diversion to beverage use of distilled spirits on which respondents claim nonbeverage drawback.

Current Actions: There are no program changes associated with this information collection, and TTB is submitting it for extension purposes only. As for adjustments, due to changes in agency estimates, TTB is increasing the number of annual respondents, responses, and burden hours associated with this collection.

Type of Review: Extension of a currently approved collection.

Affected Public: Businesses or other for-profits.

Estimated Annual Burden

- *Number of Respondents:* 615.
- *Average Responses per Respondent:* 1 (one).
- *Number of Responses:* 615.
- *Average per-response Burden:* 21 hours.
- *Total Burden:* 12,915 hours.

OMB Control No. 1513–0075

Title: Proprietors or Claimants Exporting Liquors (TTB REC 5900/1).

TTB Recordkeeping Number: TTB REC 5900/1.

Abstract: Under the IRC at 26 U.S.C. 5053, 5214, and 5362, distilled spirits, wine, and beer may be exported without payment of Federal excise tax. Under the IRC at 26 U.S.C. 5055 and 5062, taxpaid distilled spirits, wine, and beer may be exported and the exporter may claim drawback (refund) of the taxes paid. To prevent payment of fraudulent or incorrect drawback claims, the TTB regulations in 27 CFR part 28 require exporters to keep and make available records of pertinent Customs and TTB forms and commercial records documenting the export of taxpaid alcohol beverages for which they will claim drawback.

Current Actions: There are no program changes or adjustments associated with this information collection, and TTB is submitting it for extension purposes only.

Type of Review: Extension of a currently approved collection.

Affected Public: Businesses or other for-profits.

Estimated Annual Burden

- *Number of Respondents:* 750.
- *Average Responses per Respondent:* 1 (one).
- *Number of Responses:* 750.
- *Average per-response Burden:* 1 hour.
- *Total Burden:* 750 hours.

OMB Control No. 1513–0099

Title: Administrative Remedies—Requests for Closing Agreements.

Abstract: The IRC at 26 U.S.C. 7121 authorizes the Secretary to enter into a written agreement with any person, or their agent, relating to the liability of that person for any internal revenue tax for any taxable period. Under that authority, TTB has issued regulations at 27 CFR 70.485 pertaining to such ''closing agreements.'' Specific to this information collection, that regulation requires a taxpayer or their agent to submit a written request to TTB to enter into a closing agreement to resolve excise tax matters. TTB uses the information collected in the request and any attached supporting documentation to determine whether the Bureau should pursue a closing agreement with the taxpayer. Closing agreements allow TTB and a taxpayer to resolve tax liability matters prior to any adversarial legal or administrative proceedings.

Current Actions: There are no program changes associated with this information collection, and TTB is submitting it for extension purposes only. As for adjustments, due to changes in agency estimates, TTB is increasing the number of annual respondents, responses, and burden hours associated with this collection.

Type of Review: Extension of a currently approved collection.

Affected Public: Businesses or other for-profits.

Estimated Annual Burden

- *Number of Respondents:* 10.
- *Average Responses per Respondent:* 1 (one).
- *Number of Responses:* 10.
- *Average per-response Burden:* 1 hour.
- *Total Burden:* 10 hours.

OMB Control No. 1513–0101

Title: Marks and Notices on Packages of Tobacco Products (TTB REC 5210/13.

TTB Recordkeeping Number: TTB REC 5210/3.

Abstract: The IRC at 26 U.S.C. 5723(b) requires packages of tobacco products, processed tobacco, and cigarette paper or tubes to bear the marks, labels, and notices required by regulation. Under that authority, the TTB tobacco regulations in 27 CFR parts 40, 41, 44, and 45 require packages of domestic and imported tobacco products to bear certain marks identifying the product sufficient to determine its excise tax class, and the product's quantity or weight, depending on the basis of the tax. The regulations also require certain notices on the packages (or shipping containers) of tobacco products intended for export or use of the United States, as those products may be removed without tax payment or with benefit of tax drawback. The disclosed information identifies tobacco products, and the appearance of the notices on the packages helps to identify the products if diverted into the domestic market after withdrawal without payment of tax or with benefit of tax drawback into the domestic market.

Current Actions: Previously, TTB reported that this collection consisted entirely of usual and customary labels, marks, and notices placed by respondents on tobacco product packages. However, TTB believes that the labeling on packages of tobacco products intended for export or for the use the United States indicating the tax-exempt status of such products may not be a usual and customary business practice (see 27 CFR 44.185 and 45.46, respectively). Therefore, TTB is adding one hour of burden per respondent to account for such labeling.

Type of Review: Revision of a currently approved collection.

Affected Public: Businesses or other for-profits.

Estimated Annual Burden

- *Number of Respondents:* 724.
- *Average Responses per Respondent:* 1 (one).
- *Number of Responses:* 724.
- *Average per-response Burden:* 1 hour.
- *Total Burden:* 724 hours.

OMB Control No. 1513–0121

Title: Labeling of Major Food Allergens and Petitions for Exemption.

Abstract: The FAA Act at 27 U.S.C. 205(e) authorizes the Secretary to issue regulations regarding the labeling of wine, distilled spirits, and malt beverages in order to, among other things, prohibit consumer deception and ensure that labels provide consumers with adequate information as to the identity and quality of such products. Under this authority, the TTB

regulations provide for the voluntary labeling of major food allergens used in the production of alcohol beverages. (As defined in the Food Allergen Labeling and Consumer Protection Act of 2004 (118 Stat. 905)), the major food allergens are milk, eggs, fish, crustacean shellfish, tree nuts, peanuts, wheat, and soybeans.) Under the TTB regulations, if the bottler declares any one major food allergen, then all major food allergens used in the product must be declared on the label, except when TTB has approved a petition for exemption from such labeling. This information collection includes the labeling of allergens and petitions for exemption.

Current Actions: There are no program changes associated with this information collection, and TTB is submitting it for extension purposes only. As for adjustments, due to changes in agency estimates, TTB is increase the number of annual respondents, responses, and burden hours associated with this collection.

Type of Review: Extension of a currently approved collection.

Affected Public: Businesses or other for-profits.

Estimated Annual Burden

- *Number of Respondents:* 700.
- *Average Responses per Respondent:* 1 (one).
- *Number of Responses:* 700.
- *Average per-response Burden:* 49 minutes.
- *Total Burden:* 572 hours.

Dated: October 28, 2020.

Amy R. Greenberg,

Director, Regulations and Rulings Division.

[FR Doc. 2020–24199 Filed 11–2–20; 8:45 am]

BILLING CODE 4810–31–P

DEPARTMENT OF THE TREASURY

Office of Foreign Assets Control

Notice of OFAC Sanctions Actions

AGENCY: Office of Foreign Assets Control, Treasury.

ACTION: Notice.

SUMMARY: The Department of the Treasury's Office of Foreign Assets Control (OFAC) is publishing the names of one or more entity and aircraft that have been placed on OFAC's Specially Designated Nationals and Blocked Persons List based on OFAC's determination that one or more applicable legal criteria were satisfied. All property and interests in property subject to U.S. jurisdiction of this person and these aircraft are blocked, and U.S. persons are generally prohibited from engaging in transactions with them.

DATES: See **SUPPLEMENTARY INFORMATION** section.

FOR FURTHER INFORMATION CONTACT: OFAC: Associate Director for Global Targeting, tel.: 202–622–2420; Assistant Director for Sanctions Compliance & Evaluation, tel.: 202–622–2490; Assistant Director for Licensing, tel.: 202–622–2480; or Assistant Director for Regulatory Affairs, tel.: 202–622–4855.

SUPPLEMENTARY INFORMATION:

Electronic Availability

The Specially Designated Nationals and Blocked Persons List and additional information concerning OFAC sanctions programs are available on OFAC's website (*https://www.treasury.gov/ofac*).

Notice of OFAC Action(s)

On February 7, 2020, OFAC determined that the property and interests in property subject to U.S. jurisdiction of the following entity and the following aircraft subject to U.S. jurisdiction are blocked under the relevant sanctions authority listed below.

Entity

1. CONSORCIO VENEZOLANO DE INDUSTRIAS AERONAUTICAS Y SERVICIOS AEREOS, S.A. (a.k.a. CONVIASA), Avenida Intercomunal, Edificio Sede, Sector 6.3, Maiquetia, Distrito Federal, Venezuela; Avenida Lecuna Torre Oeste Piso 49, Libertador, Caracas, Venezuela; Phone Number 53 212 5078868; RIF # G–20007774–3 (Venezuela) [VENEZUELA–EO13884].

Identified pursuant to Executive Order 13884, ''Blocking Property of the Government of Venezuela,'' 84 FR 38843 (''E.O. 13884'' or the ''Order'') for meeting the definition of Government of Venezuela, a person whose property and interests in property are blocked pursuant to E.O. 13884.

Aircraft

1. YV1000; Aircraft Model DHC7; Aircraft Manufacturer's Serial Number (MSN) 068; Aircraft Tail Number YV1000 (aircraft) [VENEZUELA–EO13884] (Linked To: CONSORCIO VENEZOLANO DE INDUSTRIAS AERONAUTICAS Y SERVICIOS AEREOS, S.A.).

Identified pursuant to E.O. 13884 as property in which CONVIASA, an entity whose property and interests in property are blocked pursuant to E.O. 13884, has an interest.

2. YV1003; Aircraft Model DHC7; Aircraft Manufacturer's Serial Number (MSN) 103; Aircraft Tail Number YV1003 (aircraft) [VENEZUELA–EO13884] (Linked To: CONSORCIO VENEZOLANO DE INDUSTRIAS AERONAUTICAS Y SERVICIOS AEREOS, S.A.).

Identified pursuant to E.O. 13884 as property in which CONVIASA, an entity whose property and interests in property are blocked pursuant to E.O. 13884, has an interest.

3. YV1004; Aircraft Model A340; Aircraft Manufacturer's Serial Number (MSN) 031; Aircraft Tail Number YV1004 (aircraft) [VENEZUELA–EO13884] (Linked To: CONSORCIO VENEZOLANO DE INDUSTRIAS AERONAUTICAS Y SERVICIOS AEREOS, S.A.).

Identified pursuant to E.O. 13884 as property in which CONVIASA, an entity whose property and interests in property are blocked pursuant to E.O. 13884, has an interest.

4. YV1005; Aircraft Model ATR42; Aircraft Manufacturer's Serial Number (MSN) 491; Aircraft Tail Number YV1005 (aircraft) [VENEZUELA–EO13884] (Linked To: CONSORCIO VENEZOLANO DE INDUSTRIAS AERONAUTICAS Y SERVICIOS AEREOS, S.A.).

Identified pursuant to E.O. 13884 as property in which CONVIASA, an entity whose property and interests in property are blocked pursuant to E.O. 13884, has an interest.

5. YV1007; Aircraft Model B737; Aircraft Manufacturer's Serial Number (MSN) 23949; Aircraft Tail Number YV1007 (aircraft) [VENEZUELA–EO13884] (Linked To: CONSORCIO VENEZOLANO DE INDUSTRIAS AERONAUTICAS Y SERVICIOS AEREOS, S.A.).

Identified pursuant to E.O. 13884 as property in which CONVIASA, an entity whose property and interests in property are blocked pursuant to E.O. 13884, has an interest.

6. YV1008; Aircraft Model ATR42; Aircraft Manufacturer's Serial Number (MSN) 346; Aircraft Tail Number YV1008 (aircraft) [VENEZUELA–EO13884] (Linked To: CONSORCIO VENEZOLANO DE INDUSTRIAS AERONAUTICAS Y SERVICIOS AEREOS, S.A.).

Identified pursuant to E.O. 13884 as property in which CONVIASA, an entity whose property and interests in property are blocked pursuant to E.O. 13884, has an interest.

7. YV1009; Aircraft Model ATR42; Aircraft Manufacturer's Serial Number (MSN) 487; Aircraft Tail Number YV1009 (aircraft) [VENEZUELA–EO13884] (Linked To: CONSORCIO VENEZOLANO DE INDUSTRIAS

AERONAUTICAS Y SERVICIOS AEREOS, S.A.).

Identified pursuant to E.O. 13884 as property in which CONVIASA, an entity whose property and interests in property are blocked pursuant to E.O. 13884, has an interest.

8. YV1850; Aircraft Model ATR72; Aircraft Manufacturer's Serial Number (MSN) 276; Aircraft Tail Number YV1850 (aircraft) [VENEZUELA–EO13884] (Linked To: CONSORCIO VENEZOLANO DE INDUSTRIAS AERONAUTICAS Y SERVICIOS AEREOS, S.A.).

Identified pursuant to E.O. 13884 as property in which CONVIASA, an entity whose property and interests in property are blocked pursuant to E.O. 13884, has an interest.

9. YV2421; Aircraft Model ATR72; Aircraft Manufacturer's Serial Number (MSN) 482; Aircraft Tail Number YV2421 (aircraft) [VENEZUELA–EO13884] (Linked To: CONSORCIO VENEZOLANO DE INDUSTRIAS AERONAUTICAS Y SERVICIOS AEREOS, S.A.).

Identified pursuant to E.O. 13884 as property in which CONVIASA, an entity whose property and interests in property are blocked pursuant to E.O. 13884, has an interest.

10. YV2422; Aircraft Model ATR72; Aircraft Manufacturer's Serial Number (MSN) 486; Aircraft Tail Number YV2422 (aircraft) [VENEZUELA–EO13884] (Linked To: CONSORCIO VENEZOLANO DE INDUSTRIAS AERONAUTICAS Y SERVICIOS AEREOS, S.A.).

Identified pursuant to E.O. 13884 as property in which CONVIASA, an entity whose property and interests in property are blocked pursuant to E.O. 13884, has an interest.

11. YV2556; Aircraft Model B737; Aircraft Manufacturer's Serial Number (MSN) 24712; Aircraft Tail Number YV2556 (aircraft) [VENEZUELA–EO13884] (Linked To: CONSORCIO VENEZOLANO DE INDUSTRIAS AERONAUTICAS Y SERVICIOS AEREOS, S.A.).

Identified pursuant to E.O. 13884 as property in which CONVIASA, an entity whose property and interests in property are blocked pursuant to E.O. 13884, has an interest.

12. YV2557; Aircraft Model B737; Aircraft Manufacturer's Serial Number (MSN) 24633; Aircraft Tail Number YV2557 (aircraft) [VENEZUELA–EO13884] (Linked To: CONSORCIO VENEZOLANO DE INDUSTRIAS AERONAUTICAS Y SERVICIOS AEREOS, S.A.).

Identified pursuant to E.O. 13884 as property in which CONVIASA, an entity whose property and interests in property are blocked pursuant to E.O. 13884, has an interest.

13. YV2558; Aircraft Model B737; Aircraft Manufacturer's Serial Number (MSN) 23096; Aircraft Tail Number YV2558 (aircraft) [VENEZUELA–EO13884] (Linked To: CONSORCIO VENEZOLANO DE INDUSTRIAS AERONAUTICAS Y SERVICIOS AEREOS, S.A.).

Identified pursuant to E.O. 13884 as property in which CONVIASA, an entity whose property and interests in property are blocked pursuant to E.O. 13884, has an interest.

14. YV2559; Aircraft Model B737; Aircraft Manufacturer's Serial Number (MSN) 23097; Aircraft Tail Number YV2559 (aircraft) [VENEZUELA–EO13884] (Linked To: CONSORCIO VENEZOLANO DE INDUSTRIAS AERONAUTICAS Y SERVICIOS AEREOS, S.A.).

Identified pursuant to E.O. 13884 as property in which CONVIASA, an entity whose property and interests in property are blocked pursuant to E.O. 13884, has an interest.

15. YV2849; Aircraft Model ERJ190; Aircraft Manufacturer's Serial Number (MSN) 19000509; Aircraft Tail Number YV2849 (aircraft) [VENEZUELA–EO13884] (Linked To: CONSORCIO VENEZOLANO DE INDUSTRIAS AERONAUTICAS Y SERVICIOS AEREOS, S.A.).

Identified pursuant to E.O. 13884 as property in which CONVIASA, an entity whose property and interests in property are blocked pursuant to E.O. 13884, has an interest.

16. YV2850; Aircraft Model ERJ190; Aircraft Manufacturer's Serial Number (MSN) 19000505; Aircraft Tail Number YV2850 (aircraft) [VENEZUELA–EO13884] (Linked To: CONSORCIO VENEZOLANO DE INDUSTRIAS AERONAUTICAS Y SERVICIOS AEREOS, S.A.).

Identified pursuant to E.O. 13884 as property in which CONVIASA, an entity whose property and interests in property are blocked pursuant to E.O. 13884, has an interest.

17. YV2851; Aircraft Model ERJ190; Aircraft Manufacturer's Serial Number (MSN) 19000515; Aircraft Tail Number YV2851 (aircraft) [VENEZUELA–EO13884] (Linked To: CONSORCIO VENEZOLANO DE INDUSTRIAS AERONAUTICAS Y SERVICIOS AEREOS, S.A.).

Identified pursuant to E.O. 13884 as property in which CONVIASA, an entity whose property and interests in property are blocked pursuant to E.O. 13884, has an interest.

18. YV2911; Aircraft Model ERJ190; Aircraft Manufacturer's Serial Number (MSN) 19000610; Aircraft Tail Number YV2911 (aircraft) [VENEZUELA–EO13884] (Linked To: CONSORCIO VENEZOLANO DE INDUSTRIAS AERONAUTICAS Y SERVICIOS AEREOS, S.A.).

Identified pursuant to E.O. 13884 as property in which CONVIASA, an entity whose property and interests in property are blocked pursuant to E.O. 13884, has an interest.

19. YV2912; Aircraft Model ERJ190; Aircraft Manufacturer's Serial Number (MSN) 19000612; Aircraft Tail Number YV2912 (aircraft) [VENEZUELA–EO13884] (Linked To: CONSORCIO VENEZOLANO DE INDUSTRIAS AERONAUTICAS Y SERVICIOS AEREOS, S.A.).

Identified pursuant to E.O. 13884 as property in which CONVIASA, an entity whose property and interests in property are blocked pursuant to E.O. 13884, has an interest.

20. YV2913; Aircraft Model ERJ190; Aircraft Manufacturer's Serial Number (MSN) 19000622; Aircraft Tail Number YV2913 (aircraft) [VENEZUELA–EO13884] (Linked To: CONSORCIO VENEZOLANO DE INDUSTRIAS AERONAUTICAS Y SERVICIOS AEREOS, S.A.).

Identified pursuant to E.O. 13884 as property in which CONVIASA, an entity whose property and interests in property are blocked pursuant to E.O. 13884, has an interest.

21. YV2943; Aircraft Model ERJ190; Aircraft Manufacturer's Serial Number (MSN) 19000634; Aircraft Tail Number YV2943 (aircraft) [VENEZUELA–EO13884] (Linked To: CONSORCIO VENEZOLANO DE INDUSTRIAS AERONAUTICAS Y SERVICIOS AEREOS, S.A.).

Identified pursuant to E.O. 13884 as property in which CONVIASA, an entity whose property and interests in property are blocked pursuant to E.O. 13884, has an interest.

22. YV2944; Aircraft Model ERJ190; Aircraft Manufacturer's Serial Number (MSN) 19000635; Aircraft Tail Number YV2944 (aircraft) [VENEZUELA–EO13884] (Linked To: CONSORCIO VENEZOLANO DE INDUSTRIAS AERONAUTICAS Y SERVICIOS AEREOS, S.A.).

Identified pursuant to E.O. 13884 as property in which CONVIASA, an entity whose property and interests in property are blocked pursuant to E.O. 13884, has an interest.

23. YV2953; Aircraft Model ERJ190; Aircraft Manufacturer's Serial Number (MSN) 19000643; Aircraft Tail Number YV2953 (aircraft) [VENEZUELA–

EO13884] (Linked To: CONSORCIO VENEZOLANO DE INDUSTRIAS AERONAUTICAS Y SERVICIOS AEREOS, S.A.).

Identified pursuant to E.O. 13884 as property in which CONVIASA, an entity whose property and interests in property are blocked pursuant to E.O. 13884, has an interest.

24. YV2954; Aircraft Model ERJ190; Aircraft Manufacturer's Serial Number (MSN) 19000644; Aircraft Tail Number YV2954 (aircraft) [VENEZUELA–EO13884] (Linked To: CONSORCIO VENEZOLANO DE INDUSTRIAS AERONAUTICAS Y SERVICIOS AEREOS, S.A.).

Identified pursuant to E.O. 13884 as property in which CONVIASA, an entity whose property and interests in property are blocked pursuant to E.O. 13884, has an interest.

25. YV2964; Aircraft Model ERJ190; Aircraft Manufacturer's Serial Number (MSN) 19000646; Aircraft Tail Number YV2964 (aircraft) [VENEZUELA–EO13884] (Linked To: CONSORCIO VENEZOLANO DE INDUSTRIAS AERONAUTICAS Y SERVICIOS AEREOS, S.A.).

Identified pursuant to E.O. 13884 as property in which CONVIASA, an entity whose property and interests in property are blocked pursuant to E.O. 13884, has an interest.

26. YV2965; Aircraft Model ERJ190; Aircraft Manufacturer's Serial Number (MSN) 19000645; Aircraft Tail Number YV2965 (aircraft) [VENEZUELA–EO13884] (Linked To: CONSORCIO VENEZOLANO DE INDUSTRIAS AERONAUTICAS Y SERVICIOS AEREOS, S.A.).

Identified pursuant to E.O. 13884 as property in which CONVIASA, an entity whose property and interests in property are blocked pursuant to E.O. 13884, has an interest.

27. YV2966; Aircraft Model ERJ190; Aircraft Manufacturer's Serial Number (MSN) 19000485; Aircraft Tail Number YV2966 (aircraft) [VENEZUELA–EO13884] (Linked To: CONSORCIO VENEZOLANO DE INDUSTRIAS AERONAUTICAS Y SERVICIOS AEREOS, S.A.).

Identified pursuant to E.O. 13884 as property in which CONVIASA, an entity whose property and interests in property are blocked pursuant to E.O. 13884, has an interest.

28. YV2969; Aircraft Model 208; Aircraft Manufacturer's Serial Number (MSN) 208B5062; Aircraft Tail Number YV2969 (aircraft) [VENEZUELA–EO13884] (Linked To: CONSORCIO VENEZOLANO DE INDUSTRIAS AERONAUTICAS Y SERVICIOS AEREOS, S.A.).

Identified pursuant to E.O. 13884 as property in which CONVIASA, an entity whose property and interests in property are blocked pursuant to E.O. 13884, has an interest.

29. YV2970; Aircraft Model 208; Aircraft Manufacturer's Serial Number (MSN) 208B5071; Aircraft Tail Number YV2970 (aircraft) [VENEZUELA–EO13884] (Linked To: CONSORCIO VENEZOLANO DE INDUSTRIAS AERONAUTICAS Y SERVICIOS AEREOS, S.A.).

Identified pursuant to E.O. 13884 as property in which CONVIASA, an entity whose property and interests in property are blocked pursuant to E.O. 13884, has an interest.

30. YV2984; Aircraft Model A319; Aircraft Manufacturer's Serial Number (MSN) 1468; Aircraft Tail Number YV2984 (aircraft) [VENEZUELA–EO13884] (Linked To: CONSORCIO VENEZOLANO DE INDUSTRIAS AERONAUTICAS Y SERVICIOS AEREOS, S.A.).

Identified pursuant to E.O. 13884 as property in which CONVIASA, an entity whose property and interests in property are blocked pursuant to E.O. 13884, has an interest.

31. YV2993; Aircraft Model 208; Aircraft Manufacturer's Serial Number (MSN) 208B5082; Aircraft Tail Number YV2993 (aircraft) [VENEZUELA–EO13884] (Linked To: CONSORCIO VENEZOLANO DE INDUSTRIAS AERONAUTICAS Y SERVICIOS AEREOS, S.A.).

Identified pursuant to E.O. 13884 as property in which CONVIASA, an entity whose property and interests in property are blocked pursuant to E.O. 13884, has an interest.

32. YV2994; Aircraft Model 208; Aircraft Manufacturer's Serial Number (MSN) 208B5083; Aircraft Tail Number YV2994 (aircraft) [VENEZUELA–EO13884] (Linked To: CONSORCIO VENEZOLANO DE INDUSTRIAS AERONAUTICAS Y SERVICIOS AEREOS, S.A.).

Identified pursuant to E.O. 13884 as property in which CONVIASA, an entity whose property and interests in property are blocked pursuant to E.O. 13884, has an interest.

33. YV3016; Aircraft Model ERJ190; Aircraft Manufacturer's Serial Number (MSN) 19000177; Aircraft Tail Number YV3016 (aircraft) [VENEZUELA–EO13884] (Linked To: CONSORCIO VENEZOLANO DE INDUSTRIAS AERONAUTICAS Y SERVICIOS AEREOS, S.A.).

Identified pursuant to E.O. 13884 as property in which CONVIASA, an entity whose property and interests in property are blocked pursuant to E.O. 13884, has an interest.

34. YV3032; Aircraft Model 208; Aircraft Manufacturer's Serial Number (MSN) 208B5136; Aircraft Tail Number YV3032 (aircraft) [VENEZUELA–EO13884] (Linked To: CONSORCIO VENEZOLANO DE INDUSTRIAS AERONAUTICAS Y SERVICIOS AEREOS, S.A.).

Identified pursuant to E.O. 13884 as property in which CONVIASA, an entity whose property and interests in property are blocked pursuant to E.O. 13884, has an interest.

35. YV3033; Aircraft Model 208; Aircraft Manufacturer's Serial Number (MSN) 208B5140; Aircraft Tail Number YV3033 (aircraft) [VENEZUELA–EO13884] (Linked To: CONSORCIO VENEZOLANO DE INDUSTRIAS AERONAUTICAS Y SERVICIOS AEREOS, S.A.).

Identified pursuant to E.O. 13884 as property in which CONVIASA, an entity whose property and interests in property are blocked pursuant to E.O. 13884, has an interest.

36. YV3034; Aircraft Model 208; Aircraft Manufacturer's Serial Number (MSN) 208B5142; Aircraft Tail Number YV3034 (aircraft) [VENEZUELA–EO13884] (Linked To: CONSORCIO VENEZOLANO DE INDUSTRIAS AERONAUTICAS Y SERVICIOS AEREOS, S.A.).

Identified pursuant to E.O. 13884 as property in which CONVIASA, an entity whose property and interests in property are blocked pursuant to E.O. 13884, has an interest.

37. YV3052; Aircraft Model ERJ190; Aircraft Manufacturer's Serial Number (MSN) 19000675; Aircraft Tail Number YV3052 (aircraft) [VENEZUELA–EO13884] (Linked To: CONSORCIO VENEZOLANO DE INDUSTRIAS AERONAUTICAS Y SERVICIOS AEREOS, S.A.).

Identified pursuant to E.O. 13884 as property in which CONVIASA, an entity whose property and interests in property are blocked pursuant to E.O. 13884, has an interest.

38. YV3071; Aircraft Model ERJ190; Aircraft Manufacturer's Serial Number (MSN) 19000676; Aircraft Tail Number YV3071 (aircraft) [VENEZUELA–EO13884] (Linked To: CONSORCIO VENEZOLANO DE INDUSTRIAS AERONAUTICAS Y SERVICIOS AEREOS, S.A.).

Identified pursuant to E.O. 13884 as property in which CONVIASA, an entity whose property and interests in property are blocked pursuant to E.O. 13884, has an interest.

39. YV3434; Aircraft Model B737; Aircraft Manufacturer's Serial Number

(MSN) 21167; Aircraft Tail Number YV3434 (aircraft) [VENEZUELA–EO13884] (Linked To: CONSORCIO VENEZOLANO DE INDUSTRIAS AERONAUTICAS Y SERVICIOS AEREOS, S.A.).

Identified pursuant to E.O. 13884 as property in which CONVIASA, an entity whose property and interests in property are blocked pursuant to E.O. 13884, has an interest.

40. YV378T; Aircraft Model B737; Aircraft Manufacturer's Serial Number (MSN) 23789; Aircraft Tail Number YV378T (aircraft) [VENEZUELA–EO13884] (Linked To: CONSORCIO VENEZOLANO DE INDUSTRIAS AERONAUTICAS Y SERVICIOS AEREOS, S.A.).

Identified pursuant to E.O. 13884 as property in which CONVIASA, an entity whose property and interests in property are blocked pursuant to E.O. 13884, has an interest.

Dated: February 7, 2020.

Andrea Gacki,

Director, Office of Foreign Assets Control.

Editorial Note: This document was received for publication by the Office of the Federal Register on Oct 29, 2020.

[FR Doc. 2020–24354 Filed 11–2–20; 8:45 am]

BILLING CODE 4810–AL–P

DEPARTMENT OF THE TREASURY

Internal Revenue Service

Proposed Collection; Comment Request for Forms 1065, 1066, 1120, 1120–C, 1120–F, 1120–H, 1120–ND, 1120–S, 1120–SF, 1120–FSC, 1120–L, 1120–PC, 1120–REIT, 1120–RIC, 1120–POL, and Related Attachments

AGENCY: Internal Revenue Service (IRS), Treasury.

ACTION: Notice and request for comments.

SUMMARY: The Internal Revenue Service, as part of its continuing effort to reduce paperwork and respondent burden, invites the general public and other Federal agencies to take this opportunity to comment on proposed and/or continuing information collections, as required by the Paperwork Reduction Act of 1995 (PRA). The IRS is soliciting comments on forms used by business entity taxpayers: Forms 1065, 1066, 1120, 1120–C, 1120–F, 1120–H, 1120–ND, 1120–S, 1120–SF, 1120–FSC, 1120–L, 1120–PC, 1120–REIT, 1120–RIC, 1120–POL; and related attachments to these forms (see the Appendix to this notice).

DATES: Written comments should be received on or before January 4, 2021 to be assured of consideration.

ADDRESSES: Direct all written comments to Paul Adams, Internal Revenue Service, Room 6526, 1111 Constitution Avenue NW, Washington, DC 20224.

FOR FURTHER INFORMATION: Requests for additional information or copies of the form and instructions should be directed to Sara Covington, at (737) 800–6149, Internal Revenue Service, Room 6526, 1111 Constitution Avenue NW, Washington, DC 20224, or through the internet, at *Sara.L.Covington@irs.gov.*

SUPPLEMENTARY INFORMATION: Today, over 90 percent of all business entity tax returns are prepared using software by the taxpayer or with preparer assistance.

These are forms used by business taxpayers. These include Forms *1065, 1066, 1120, 1120–C, 1120–F, 1120–H, 1120–ND, 1120–S, 1120–SF, 1120–FSC, 1120–L, 1120–PC, 1120–REIT, 1120–RIC, 1120–POL,* and related schedules, that business entity taxpayers attach to their tax returns (see Appendix A for this notice). In addition, there are numerous OMB numbers that report burden already included in this OMB number. In order to eliminate this duplicative burden reporting, 163 OMB numbers are being obsoleted. See Appendix B for information on the obsoleted OMB numbers and the burden that was previously reported under those numbers.

Tax Compliance Burden

Tax compliance burden is defined as the time and money taxpayers spend to comply with their tax filing responsibilities. Time-related activities include recordkeeping, tax planning, gathering tax materials, learning about the law and what you need to do, and completing and submitting the return. Out-of-pocket costs include expenses such as purchasing tax software, paying a third-party preparer, and printing and postage. Tax compliance burden does not include a taxpayer's tax liability, economic inefficiencies caused by sub-optimal choices related to tax deductions or credits, or psychological costs.

Proposed PRA Submission to OMB

Title: U.S. Business Income Tax Return.

OMB Number: 1545–0123.

Form Numbers: Forms 1065, 1066, 1120, 1120–C, 1120–F, 1120–H, 1120–ND, 1120–S, 1120–SF, 1120–FSC, 1120–L, 1120–PC, 1120–REIT, 1120–RIC, 1120–POL and all attachments to these forms (see the Appendix to this notice).

Abstract: These forms are used by businesses to report their income tax liability.

Current Actions: There have been changes in regulatory guidance related to various forms approved under this approval package during the past year. There has been additions and removals of forms included in this approval package. It is anticipated that these changes will have an impact on the overall burden and cost estimates requested for this approval package, however these estimates were not finalized at the time of release of this notice. These estimated figures are expected to be available by the release of the 30-comment notice from Treasury. This approval package is being submitted for renewal purposes only.

Type of Review: Revision of currently approved collections.

Affected Public: Corporations and Pass-Through Entities.

Estimated Number of Respondents: 12,000,000.

Total Estimated Time: 3.344 billion hours.

Estimated Time per Respondent: 279 hours (278.666667).

Total Estimated Out-of-Pocket Costs: $61.558 billion ($61,558,000,000).

Estimated Out-of-Pocket Cost per Respondent: $5,130.

Total Monetized Burden: 190,981 billion.

Estimated Total Monetized Burden per Respondent: $15,915.

Amounts below are for estimates for FY 2021. Reported time and cost burdens are national averages and do not necessarily reflect a ''typical case. Most taxpayers experience lower than average burden, with taxpayer burden varying considerably by taxpayer type. Detail may not add due to rounding.

FISCAL YEAR 2021 ICB ESTIMATES FOR FORM 1120 AND 1065 SERIES OF RETURNS AND FORMS AND SCHEDULES

	FY 20		FY 21
Number of Taxpayers	11,300,000	700,000	12,000,000
Burden in Hours	3,157,000,000	187,000,000	3,344,000,000
Burden in Dollars	58,148,000,000	3,410,000,000	61.558,000,000

FISCAL YEAR 2021 ICB ESTIMATES FOR FORM 1120 AND 1065 SERIES OF RETURNS AND FORMS AND SCHEDULES—Continued

	FY 20		FY 21
Monetized Total Burden	180,784,000,000	10,197,000,000	190,981.000,000

Tables 1, 2, and 3 below show the burden model estimates for each of the three classifications of business taxpayers: Partnerships (Table 1), corporations (Table 2) and S corporations (Table 3). As the tables show, the average filing compliance is different for the three forms of business. Showing a combined average burden for all businesses would understate the burden for corporations and overstate the burden for the two pass-through entities (partnerships and corporations). In addition, the burden for small and large businesses is shown separately for each type of business entity in order to clearly convey the substantially higher burden faced by the largest businesses.

TABLE 1—TAXPAYER BURDEN FOR ENTITIES TAXED AS PARTNERSHIPS

[Forms 1065, 1066, and all attachments]

Primary form filed or type of taxpayer	Number of returns (millions)	Average time per taxpayer (hours)	Average cost per taxpayer	Average monetized burden
All Partnerships	4.5	290	$5,900	$17,800
Small	4.2	270	4,400	13,200
Other *	0.3	610	29,000	89,300

* "Other" is defined as one having end-of-year assets greater than $10 million. A large business is defined the same way for partnerships, taxable corporations, and pass-through corporations. A small business is any business that does not meet the definition of a large business.

TABLE 2—TAXPAYER BURDEN FOR ENTITIES TAXED AS TAXABLE CORPORATIONS

[Forms 1120, 1120–C, 1120–F, 1120–H, 1120–ND, 1120–SF, 1120–FSC, 1120–L, 1120–PC, 1120–POL, and all attachments]

Primary form filed or type of taxpayer	Number of returns (millions)	Average time per taxpayer (hours)	Average cost per taxpayer	Average monetized burden
All Taxable Corporations	2.1	335	$7,700	$23,500
Small	2.0	280	4,000	13,500
Large *	0.1	1,255	70,200	194,800

* A "large" business is defined as one having end-of-year assets greater than $10 million. A "large" business is defined the same way for partnerships, taxable corporations, and pass-through corporations. A small business is any business that does not meet the definition of a large business.

TABLE 3—TAXPAYER BURDEN FOR ENTITIES TAXED AS PASS-THROUGH CORPORATIONS

[Forms 1120–REIT, 1120–RIC, 1120–S, and all attachments]

Primary form filed or type of taxpayer	Number of returns (millions)	Average time per taxpayer (hours)	Average cost per taxpayer	Average monetized burden
All Pass-Through Corporations	5.4	245	$3,500	$11,300
Small	5.3	240	3,100	10,200
Large *	0.1	610	30,900	91,500

* A "large" business is defined as one having end-of-year assets greater than $10 million. A "large" business is defined the same way for partnerships, taxable corporations, and pass-through corporations. A small business is any business that does not meet the definition of a large business.

An agency may not conduct or sponsor, and a person is not required to respond to, a collection of information unless the collection of information displays a valid OMB Control Number. Books or records relating to a collection of information must be retained as long as their contents may become material in the administration of any internal revenue law. Generally, tax returns and tax return information are confidential, as required by 26 U.S.C. 6103.

Request for Comments

Comments submitted in response to this notice will be summarized and/or included in the request for OMB approval. All comments will become a matter of public record. Comments are invited on: (a) Whether the collection of information is necessary for the proper performance of the functions of the agency, including whether the information will have practical utility; (b) the accuracy of the agency's estimate of the burden of the collection of information; (c) ways to enhance the quality, utility, and clarity of the information to be collected; (d) ways to minimize the burden of the collection of information on respondents, including through the use of automated collection

techniques or other forms of information technology; and (e) estimates of capital or start-up costs and costs of operation, maintenance, and purchase of services to provide information.

Approved: October 28, 2020.

Sara L Covington,

IRS Tax Analyst.

Appendix A

Product	Title
Form 1042	Annual Withholding Tax Return for U.S. Source Income of Foreign Persons.
Form 1042–S	Foreign Person's U.S. Source Income Subject to Withholding.
Form 1042–T	Annual Summary and Transmittal of Forms 1042–S.
Form 1065	U.S. Return of Partnership Income.
Form 1065 (SCH B–1)	Information for Partners Owning 50% or More of the Partnership.
Form 1065 (SCH B–2)	Election Out of the Centralized Partnership Audit Regime.
Form 1065 (SCH C)	Additional Information for Schedule M–3 Filers.
Form 1065 (SCH D)	Capital Gains and Losses.
Form 1065 (SCH K–1)	Partner's Share of Income, Deductions, Credits, etc.
Form 1065 (SCH M–3)	Net Income (Loss) Reconciliation for Certain Partnerships.
Form 1065X	Amended Return or Administrative Adjustment Request (AAR).
Form 1066	U.S. Real Estate Mortgage Investment Conduit (REMIC) Income Tax Return.
Form 1066 (SCH Q)	Quarterly Notice to Residual Interest Holder of REMIC Taxable Income or Net Loss Allocation.
Form 1118	Foreign Tax Credit-Corporations.
Form 1118 (SCH I)	Reduction of Foreign Oil and Gas Taxes.
Form 1118 (SCH J)	Adjustments to Separate Limitation Income (Loss) Categories for Determining Numerators of Limitation Fractions, Year-End Recharacterization Balances, and Overall Foreign and Domestic Loss Account Balances.
Form 1118 (SCH K)	Foreign Tax Carryover Reconciliation Schedule.
Form 1120	U.S. Corporation Income Tax Return.
Form 1120 (SCH B)	Additional Information for Schedule M–3 Filers.
Form 1120 (SCH D)	Capital Gains and Losses.
Form 1120 (SCH G)	Information on Certain Persons Owning the Corporation's Voting Stock.
Form 1120 (SCH H)	Section 280H Limitations for a Personal Service Corporation (PSC).
Form 1120 (SCH M–3)	Net Income (Loss) Reconciliation for Corporations With Total Assets of $10 Million or More.
Form 1120 (SCH N)	Foreign Operations of U.S. Corporations.
Form 1120 (SCH O)	Consent Plan and Apportionment Schedule for a Controlled Group.
Form 1120 (SCH PH)	U.S. Personal Holding Company (PHC) Tax.
Form 1120 (SCH UTP)	Uncertain Tax Position Statement.
Form 1120–C	U.S. Income Tax Return for Cooperative Associations.
Form 1120F	U.S. Income Tax Return of a Foreign Corporation.
Form 1120–F (SCH H)	Deductions Allocated to Effectively Connected Income Under Regulations Section 1.861–8.
Form 1120–F (SCH I)	Interest Expense Allocation Under Regulations Section 1.882–5.
Form 1120–F (SCH M1 & M2)	Reconciliation of Income (Loss) and Analysis of Unappropriated Retained Earnings per Books.
Form 1120–F (SCH M–3)	Net Income (Loss) Reconciliation for Foreign Corporations With Reportable Assets of $10 Million or More.
Form 1120–F (SCH P)	List of Foreign Partner Interests in Partnerships.
Form 1120–F (SCH S)	Exclusion of Income From the International Operation of Ships or Aircraft Under Section 883.
Form 1120–F (SCH V)	List of Vessels or Aircraft, Operators, and Owners.
Form 1120–FSC	U.S. Income Tax Return of a Foreign Sales Corporation.
Form 1120FSC (SCH P)	Transfer Price or Commission.
Form 1120H	U.S. Income Tax Return for Homeowners Associations.
Form 1120–IC–DISC	Interest Charge Domestic International Sales Corporation Return.
Form 1120–IC–DISC (SCH K)	Shareholder's Statement of IC–DISC Distributions.
Form 1120–IC–DISC (SCH P)	Intercompany Transfer Price or Commission.
Form 1120–IC–DISC (SCH Q)	Borrower's Certificate of Compliance With the Rules for Producer's Loans.
Form 1120–L	U.S. Life Insurance Company Income Tax Return.
Form 1120–L (SCH M–3)	Net Income (Loss) Reconciliation for U.S. Life Insurance Companies With Total Assets of $10 Million or More.
Form 1120–ND *	Return for Nuclear Decommissioning Funds and Certain Related Persons.
Form 1120–PC	U.S. Property and Casualty Insurance Company Income Tax Return.
Form 1120–PC (SCH M–3)	Net Income (Loss) Reconciliation for U.S. Property and Casualty Insurance Companies With Total Assets of $10 Million or More.
Form 1120–POL	U.S. Income Tax Return for Certain Political Organizations.
Form 1120–REIT	U.S. Income Tax Return for Real Estate Investment Trusts.
Form 1120–RIC	U.S. Income Tax Return for Regulated Investment Companies.
Form 1120S	U.S. Income Tax Return for an S Corporation.
Form 1120S (SCH B–1)	Information on Certain Shareholders of an S Corporation.
Form 1120S (SCH D)	Capital Gains and Losses and Built-In Gains.
Form 1120S (SCH K–1)	Shareholder's Share of Income, Deductions, Credits, etc.
Form 1120S (SCH M–3)	Net Income (Loss) Reconciliation for S Corporations With Total Assets of $10 Million or More.
Form 1120–SF	U.S. Income Tax Return for Settlement Funds (Under Section 468B).
Form 1120–W	Estimated Tax for Corporations.
Form 1120–X	Amended U.S. Corporation Income Tax Return.
Form 1122	Authorization and Consent of Subsidiary Corporation to be Included in a Consolidated Income Tax Return.
Form 1125–A	Cost of Goods Sold.
Form 1125–E	Compensation of Officers.
Form 1127	Application for Extension of Time for Payment of Tax Due to Undue Hardship.
Form 1128	Application to Adopt, Change, or Retain a Tax Year.

Product	Title
Form 1138	Extension of Time For Payment of Taxes By a Corporation Expecting a Net Operating Loss Carryback.
Form 1139	Corporation Application for Tentative Refund.
Form 2220	Underpayment of Estimated Tax By Corporations.
Form 2438	Undistributed Capital Gains Tax Return.
Form 2439	Notice to Shareholder of Undistributed Long-Term Capital Gains.
Form 2553	Election by a Small Business Corporation.
Form 2848	Power of Attorney and Declaration of Representative.
Form 3115	Application for Change in Accounting Method.
Form 3468	Investment Credit.
Form 3520	Annual Return To Report Transactions With Foreign Trusts and Receipt of Certain Foreign Gifts.
Form 3520–A	Annual Return of Foreign Trust With a U.S. Owner.
Form 3800	General Business Credit.
Form 4136	Credit for Federal Tax Paid on Fuels.
Form 4255	Recapture of Investment Credit.
Form 4466	Corporation Application for Quick Refund of Overpayment of Estimated Tax.
Form 4562	Depreciation and Amortization (Including Information on Listed Property).
Form 4684	Casualties and Thefts.
Form 4797	Sales of Business Property.
Form 4810	Request for Prompt Assessment Under Internal Revenue Code Section 6501(d).
Form 4876A	Election to Be Treated as an Interest Charge DISC.
Form 5452	Corporate Report of Nondividend Distributions.
Form 5471	Information Return of U.S. Persons With Respect To Certain Foreign Corporations.
Form 5471 (SCH E)	Income, War Profits, and Excess Profits Taxes Paid or Accrued.
Form 5471 (SCH H)	Current Earnings and Profits.
Form 5471 (SCH I–1)	Information for Global Intangible Low-Taxed Income.
Form 5471 (SCH J)	Accumulated Earnings and Profits (E&P) of Controlled Foreign Corporation.
Form 5471 (SCH M)	Transactions Between Controlled Foreign Corporation and Shareholders or Other Related Persons.
Form 5471 (SCH O)	Organization or Reorganization of Foreign Corporation, and Acquisitions and Dispositions of its Stock.
Form 5471 (SCH P)	Previously Taxed Earnings and Profits of U.S. Shareholder of Certain Foreign Corporations.
Form 5472	Information Return of a 25% Foreign-Owned U.S. Corporation or a Foreign Corporation Engaged in a U.S. Trade or Business.
Form 56	Notice Concerning Fiduciary Relationship.
Form 56F	Notice Concerning Fiduciary Relationship of Financial Institution.
Form 5713	International Boycott Report.
Form 5713 (SCH A)	International Boycott Factor (Section 999(c)(1)).
Form 5713 (SCH B)	Specifically, Attributable Taxes and Income (Section 999(c)(2)).
Form 5713 (SCH C)	Tax Effect of the International Boycott Provisions.
Form 5735	American Samoa Economic Development Credit.
Form 5735 Schedule P	Allocation of Income and Expenses Under Section 936(h)(5).
Form 5884	Work Opportunity Credit.
Form 5884–A	Credits for Affected Midwestern Disaster Area Employers (for Employers Affected by Hurricane Harvey, Irma, or Maria or Certain California Wildfires).
Form 6198	At-Risk Limitations.
Form 6478	Biofuel Producer Credit.
Form 6627	Environmental Taxes.
Form 6765	Credit for Increasing Research Activities.
Form 6781	Gains and Losses From Section 1256 Contracts and Straddles.
Form 7004	Application for Automatic Extension of Time To File Certain Business Income Tax, Information, and Other Returns.
Form 8023	Elections Under Section 338 for Corporations Making Qualified Stock Purchases.
Form 8050	Direct Deposit Corporate Tax Refund.
Form 8082	Notice of Inconsistent Treatment or Administrative Adjustment Request (AAR).
Form 8275	Disclosure Statement.
Form 8275R	Regulation Disclosure Statement.
Form 8283	Noncash Charitable Contributions.
Form 8288	U.S. Withholding Tax Return for Dispositions by Foreign Persons of U.S. Real Property Interests.
Form 8288A	Statement of Withholding on Dispositions by Foreign Persons of U.S. Real Property Interests.
Form 8288B	Application for Withholding Certificate for Dispositions by Foreign Persons of U.S. Real Property Interests.
Form 8300	Report of Cash Payments Over $10,000 Received In a Trade or Business.
Form 8302	Electronic Deposit of Tax Refund of $1 Million or More.
Form 8308	Report of a Sale or Exchange of Certain Partnership Interests.
Form 8329	Lender's Information Return for Mortgage Credit Certificates (MCCs).
Form 8404	Interest Charge on DISC-Related Deferred Tax Liability.
Form 8453–C	U.S. Corporation Income Tax Declaration for an IRS e-file Return.
Form 8453–I	Foreign Corporation Income Tax Declaration for an IRS e-file Return.
Form 8453–PE	U.S. Partnership Declaration for an IRS e-file Return.
Form 8453–S	U.S. S Corporation Income Tax Declaration for an IRS e-file Return.
Form 851	Affiliations Schedule.
Form 8586	Low-Income Housing Credit.
Form 8594	Asset Acquisition Statement Under Section 1060.
Form 8609	Low-Income Housing Credit Allocation and Certification.
Form 8609–A	Annual Statement for Low-Income Housing Credit.
Form 8611	Recapture of Low-Income Housing Credit.
Form 8621	Information Return By Shareholder of a Passive Foreign Investment Company or Qualified Electing Fund.

Product	Title
Form 8621–A	Return by a Shareholder Making Certain Late Elections to End Treatment as a Passive Foreign Investment Company.
Form 8655	Reporting Agent Authorization.
Form 8697	Interest Computation Under the Look-Back Method for Completed Long-Term Contracts.
Form 8703	Annual Certification of a Residential Rental Project.
Form 8716	Election To Have a Tax Year Other Than a Required Tax Year.
Form 8752	Required Payment or Refund Under Section 7519.
Form 8804	Annual Return for Partnership Withholding Tax (Section 1446).
Form 8804 (SCH A)	Penalty for Underpayment of Estimated Section 1446 Tax for Partnerships.
Form 8804–C	Certificate of Partner-Level Items to Reduce Section 1446 Withholding.
Form 8804–W	Installment Payments of Section 1446 Tax for Partnerships.
Form 8805	Foreign Partner's Information Statement of Section 1446 Withholding tax.
Form 8806	Information Return for Acquisition of Control or Substantial Change in Capital Structure.
Form 8810	Corporate Passive Activity Loss and Credit Limitations.
Form 8813	Partnership Withholding Tax Payment Voucher (Section 1446).
Form 8816	Special Loss Discount Account and Special Estimated Tax Payments for Insurance Companies.
Form 8819	Dollar Election Under Section 985.
Form 8820	Orphan Drug Credit.
Form 8822B	Change of Address—Business.
Form 8824	Like-Kind Exchanges.
Form 8825	Rental Real Estate Income and Expenses of a Partnership or an S Corporation.
Form 8826	Disabled Access Credit.
Form 8827	Credit for Prior Year Minimum Tax-Corporations.
Form 8830	Enhanced Oil Recovery Credit.
Form 8832	Entity Classification Election.
Form 8833	Treaty-Based Return Position Disclosure Under Section 6114 or 7701(b).
Form 8834	Qualified Electric Vehicle Credit.
Form 8835	Renewable Electricity, Refined Coal, and Indian Coal Production Credit.
Form 8838	Consent to Extend the Time To Assess Tax Under Section 367—Gain Recognition Agreement.
Form 8838–P	Consent To Extend the Time To Assess Tax Pursuant to the Gain Deferral Method (Section 721(c)).
Form 8842	Election to Use Different Annualization Periods for Corporate Estimated Tax.
Form 8844	Empowerment Zone Employment Credit.
Form 8845	Indian Employment Credit.
Form 8846	Credit for Employer Social Security and Medicare Taxes Paid on Certain Employee Tips.
Form 8848	Consent to Extend the Time to Assess the Branch Profits Tax Under Regulations Sections 1.884–2(a) and (c).
Form 8858	Information Return of U.S. Persons With Respect to Foreign Disregarded Entities (FDEs) and Foreign Branches (FBs).
Form 8858 (SCH M)	Transactions Between Foreign Disregarded Entity of a Foreign Tax Owner and the Filer or Other Related Entities.
Form 8864	Biodiesel and Renewable Diesel Fuels Credit.
Form 8865	Return of U.S. Persons With Respect to Certain Foreign Partnerships.
Form 8865 (SCH G)	Statement of Application for the Gain Deferral Method Under Section 721(c).
Form 8865 (SCH H)	Acceleration Events and Exceptions Reporting Relating to Gain Deferral Method Under Section 721(c).
Form 8865 (SCH K–1)	Partner's Share of Income, Deductions, Credits, etc.
Form 8865 (SCH O)	Transfer of Property to a Foreign Partnership.
Form 8865 (SCH P)	Acquisitions, Dispositions, and Changes of Interests in a Foreign Partnership.
Form 8866	Interest Computation Under the Look-Back Method for Property Depreciated Under the Income Forecast Method.
Form 8869	Qualified Subchapter S Subsidiary Election.
Form 8873	Extraterritorial Income Exclusion.
Form 8874	New Markets Credit.
Form 8875	Taxable REIT Subsidiary Election.
Form 8878–A	IRS e-file Electronic Funds Withdrawal Authorization for Form 7004.
Form 8879–C	IRS e-file Signature Authorization for Form 1120.
Form 8879–I	IRS e-file Signature Authorization for Form 1120–F.
Form 8879–PE	IRS e-file Signature Authorization for Form 1065.
Form 8879–S	IRS e-file Signature Authorization for Form 1120S.
Form 8881	Credit for Small Employer Pension Plan Startup Costs.
Form 8882	Credit for Employer-Provided Childcare Facilities and Services.
Form 8883	Asset Allocation Statement Under Section 338.
Form 8886	Reportable Transaction Disclosure Statement.
Form 8896	Low Sulfur Diesel Fuel Production Credit.
Form 8900	Qualified Railroad Track Maintenance Credit.
Form 8902	Alternative Tax on Qualified Shipping Activities.
Form 8903	Domestic Production Activities Deduction.
Form 8906	Distilled Spirits Credit.
Form 8908	Energy Efficient Home Credit.
Form 8910	Alternative Motor Vehicle Credit.
Form 8911	Alternative Fuel Vehicle Refueling Property Credit.
Form 8912	Credit to Holders of Tax Credit Bonds.
Form 8916	Reconciliation of Schedule M–3 Taxable Income with Tax Return Taxable Income for Mixed Groups.
Form 8916–A	Supplemental Attachment to Schedule M–3.
Form 8918	Material Advisor Disclosure Statement.

Product	Title
Form 8923	Mining Rescue Team Training Credit.
Form 8925	Report of Employer-Owned Life Insurance Contracts.
Form 8927	Determination Under Section 860(e)(4) by a Qualified Investment Entity.
Form 8932	Credit for Employer Differential Wage Payments.
Form 8933	Carbon Oxide Sequestration Credit.
Form 8936	Qualified Plug-In Electric Drive Motor Vehicle Credit.
Form 8937	Report of Organizational Actions Affecting Basis of Securities.
Form 8938	Statement of Foreign Financial Assets.
Form 8941	Credit for Small Employer Health Insurance Premiums.
Form 8947	Report of Branded Prescription Drug Information.
Form 8966	FATCA Report.
Form 8966–C	Cover Sheet for Form 8966 Paper Submissions.
Form 8979	Partnership Representative Revocation/Resignation and Designation.
Form 8990	Limitation on Business Interest Expense IRC 163(j).
Form 8991	Tax on Base Erosion Payments of Taxpayers with Substantial Gross Receipts.
Form 8992	U.S. Shareholder Calculation of Global Intangible Low-Taxed Income (GILTI).
Form 8993	Section 250 Deduction for Foreign-Derived Intangible Income (FDII) and Global Intangible Low-Taxed Income (GILTI).
Form 8994	Employer Credit for Paid Family and Medical Leave.
Form 8996	Qualified Opportunity Fund.
Form 926	Return by a U.S. Transferor of Property to a Foreign Corporation.
Form 965	Inclusion of Deferred Foreign Income Upon Transition to Participation Exemption System.
Form 965–B	Corporate and Real Estate Investment Trust (REIT) Report of Net 965 Tax Liability and REIT Report of Net 965 Inclusion.
Form 965 (SCH–A)	U.S. Shareholder's Section 965(a) Inclusion Amount.
Form 965 (SCH–B)	Deferred Foreign Income Corporation's Earnings and Profits (E&P).
Form 965 (SCH–C)	U.S. Shareholder's Aggregate Foreign Earnings and Profits Deficit.
Form 965 (SCH–D)	U.S. Shareholder's Aggregate Foreign Cash Position.
Form 965 (SCH–E)	U.S. Shareholder's Aggregate Foreign Cash Position Detail.
Form 965 (SCH–F)	Foreign Taxes Deemed Paid by Domestic Corporation (for U.S. Shareholder Tax).
Form 965 (SCH–G)	Foreign Taxes Deemed Paid by Domestic Corporation (for U.S. Shareholder Tax Year Ending in 2017).
Form 965 (SCH–H)	Disallowance of Foreign Tax Credit and Amounts Reported on Forms 1116 and 1118.
Form 966	Corporate Dissolution or Liquidation.
Form 970	Application to Use LIFO Inventory Method.
Form 972	Consent of Shareholder to Include Specific Amount in Gross Income.
Form 973	Corporation Claim for Deduction for Consent Dividends.
Form 976	Claim for Deficiency Dividends Deductions by a Personal Holding Company, Regulated Investment Company, or Real Estate Investment Trust.
Form 982	Reduction of Tax Attributes Due to Discharge of Indebtedness (and Section 1082 Basis Adjustment).
Form SS–4	Application for Employer Identification Number.
Form SS–4PR	Solicitud de Número de Identificación Patronal (EIN).
Form T (TIMBER)	Forest Activities Schedule.
Form W–8BEN	Certificate of Foreign Status of Beneficial Owner for United States Tax Withholding (Individual).
Form W–8BEN(E)	Certificate of Entities Status of Beneficial Owner for United States Tax Withholding (Entities).
Form W–8ECI	Certificate of Foreign Person's Claim That Income is Effectively Connected With the Conduct of a Trade or Business in the United States.
Form W–8IMY	Certificate of Foreign Intermediary, Foreign Flow-Through Entity, or Certain U.S. Branches for United States Tax Withholding.

Appendix B

OMB numbers that will no longer be separately reported in order to eliminate duplicate burden reporting. For business filers, the following OMB numbers are or will be retired resulting in a total reduction of 48,912,072 reported burden hours.

Burden hours	OMB No.	Title
1005	1545–0731	Definition of an S Corporation.
41	1545–0746	LR–100–78 (Final) Creditability of Foreign Taxes.
205	1545–0755	Related Group Election With Respect to Qualified Investments in Foreign Base Company Shipping Operations.
37,922,688	1545–0771 *	TD 8864 (Final); EE–63–88 (Final and temp regulations) Taxation of Fringe Benefits and Exclusions From Gross Income for Certain Fringe Benefits; IA–140–86 (Temporary) Fringe Benefits Treas reg 1.274.
3104	1545–0807	(TD 7533) Final, DISC Rules on Procedure and Administration; Rules on Export Trade Corporations, and (TD 7896) Final, Income from Trade Shows.
8125	1545–0879	TD 8426—Certain Returned Magazines, Paperbacks or Records (IA–195–78).
978	1545–1018	FI–27–89 (Temporary and Final) Real Estate Mortgage Investment Conduits; Reporting Requirements and Other Administrative Matters; FI–61–91 (Final) Allocation of Allocable Investment.
1025	1545–1041	TD 8316 Cooperative Housing Corporations.
50417	1545–1068	T.D. 8618—Definition of a Controlled Foreign Corporation, Foreign Base Company Income, and Foreign Personal Holding Company Income of a Controlled Foreign Corporation (INTL–362–88).
12694	1545–1070	Effectively connected income and the branch profits tax.

Burden hours	OMB No.	Title
3250	1545–1072	INTL–952–86 (Final—TD 8410) and TD 8228 Allocation and Apportionment of Interest Expense and Certain Other Expenses.
1620	1545–1083*	Treatment of Dual Consolidated Losses.
40	1545–1093	Final Minimum Tax—Tax Benefit Rule (TD 8416).
4008	1545–1102	PS–19–92 (TD 9420—Final) Carryover Allocations and Other Rules Relating to the Low-Income Housing Credit.
19,830	1545–1130*	Special Loss Discount Account and Special Estimated Tax Payments for Insurance Companies.
1500	1545–1138	TD–8350 (Final) Requirements For Investments to Qualify under Section 936(d)(4) as Investments in Qualified Caribbean Basin Countries.
70	1545–1146*	Applicable Conventions Under the Accelerated Cost.
640000	1545–1191	Information with Respect to Certain Foreign-Owned Corporations—IRC Section 6038A.
662	1545–1218	CO–25–96 (TD 8824—Final) Regulations Under Section 1502 of the Internal Revenue Code of 1986; Limitations on Net Operating Loss Carryforwards and Certain Built-in Losses and Credits Following.
1000	1545–1224	T.D. 8337 (Final) Allocation and Apportionment of Deduction for State Income Taxes (INTL–112–88).
1,000	1545–1233*	Adjusted Current Earnings (IA–14–91) (Final).
2,000	1545–1237*	REG–209831–96 (TD 8823) Consolidated Returns—Limitation on the Use of Certain Losses and Deductions.
49,950	1545–1251*	TD 8437—Limitations on Percentage Depletion in the Case of Oil and Gas Wells.
50	1545–1254	TD 8396—Conclusive Presumption of Worthlessness of Debts Held by Banks (FI–34–91).
1	1545–1260*	CO–62–89 (Final) Final Regulations under Section 382 of the Internal Revenue Code of 1986; Limitations on Corporate Net Operating Loss Carryfowards.
2390	1545–1271	Treatment of transfers of stock or securities to foreign corporations.
200	1545–1275	Limitations on net operating loss carryforwards and certain built-in losses following ownership change.
2070	1545–1287	FI–3–91 (TD 8456—Final) Capitalization of Certain Policy Acquisition Expenses.
625	1545–1290	TD 8513—Bad Debt Reserves of Banks.
3542	1545–1299	TD 8459—Settlement Funds.
2200	1545–1300	Treatment of Acquisition of Certain Financial Institutions: Certain Tax Consequences of Federal Financial Assistance to Financial Institutions.
322	1545–1308	TD 8449 (Final) Election, Revocation, Termination, and Tax Effect of Subchapter S Status.
63	1545–1324	CO–88–90 (TD 8530) Limitation on Net Operating Loss Carryforwards and Certain Built-in Losses Following Ownership Change; Special Rule for Value of a Loss Corporation Under the Jurisdiction. . . .
5	1545–1338	Election Out of Subchapter K for Producers of Natural Gas—TD 8578.
18,600	1545–1344*	TD 8560 (CO–30–92) Consolidated Returns—Stock Basis and Excess Loss Accounts, Earnings and Profits, Absorption of Deductions and Losses, Joining and Leaving Consolidated Groups, Worthless (Final).
2000	1545–1352	TD 8586 (Final) Treatment of Gain From Disposition of Certain Natural Resource Recapture Property.
104899	1545–1357	PS–78–91 (TD 8521)(TD 8859) Procedures for Monitoring Compliance with Low-Income Housing Credit Requirements; PS–50–92 Rules to Carry Out the Purposes of Section 42 and for Correcting.
9350	1545–1364	Methods to Determine Taxable Income in connection with a Cost Sharing Arrangement—IRC Section 482.
20000	1545–1412	FI–54–93 (Final) Clear Reflection of Income in the Case of Hedging Transactions.
4,332	1545–1417*	Form 8845—Indian Employment Credit.
1050	1545–1433	Consolidated and Controlled Groups—Intercompany Transactions and Related Rules.
875	1545–1434	CO–26–96 (Final) Regulations Under Section 382 of the Internal Revenue Code of 1986; Application of Section 382 in Short Taxable Years and With Respect to Controlled Groups.
333	1545–1438	TD 8643 (Final) Distributions of Stock and Stock Rights.
10000	1545–1440	TD 8611, Conduit Arrangements Regulations—Final (INTL–64–93).
2,000	1545–1447*	CO–46–94 (TD 8594—Final) Losses on Small Business Stock.
1250	1545–1476	Source of Income From Sales of Inventory and Natural Resources Produced in One Jurisdiction and Sold in Another Jurisdiction.
171050	1545–1480	TD 8985—Hedging Transactions.
2500	1545–1491	TD 8746—Amortizable Bond Premium.
1000	1545–1493	TD 8684—Treatment of Gain From the Disposition of Interest in Certain Natural Resource Recapture Property by S Corporations and Their Shareholders.
212500	1545–1507	(TD 8701)—Treatment of Shareholders of Certain Passive Investment Companies; (TD 8178)—Passive Foreign Investment Companies.
326,436	1545–1522*	Revenue Procedure 2017–52, 2017–1, 2017–3 Rulings and determination letters.
10467	1545–1530	Rev. Proc. 2007–32—Tip Rate Determination Agreement (Gaming Industry); Gaming Industry Tip Compliance Agreement Program.
10,000	1545–1539*	REG–208172–91 (TD 8787—final) Basis Reduction Due to Discharge of Indebtedness.
18,553	1545–1541*	Revenue Procedure 97–27, Changes in Methods of Accounting.
278,622	1545–1546*	Revenue Procedure 97–33, EFTPS (Electronic Federal Tax Payment System).
50,000	1545–1548*	Rev. Proc. 2013–30, Uniform Late S Corporation Election Revenue Procedure.
296896	1545–1549	Tip Reporting Alternative Commitment (TRAC) Agreement and Tip Rate Determination (TRDA) for Use in the Food and Beverage Industry.
30580	1545–1551	Changes in Methods of Accounting (RP 2016–29).
623	1545–1555	REG–115795–97 (Final) General Rules for Making and Maintaining Qualified Electing Fund Elections.

Burden hours	OMB No.	Title
500	1545–1556	TD 8786—Source of Income From Sales of Inventory Partly From Sources Within a Possession of the U.S.; Also, Source of Income Derived From Certain Purchases From a Corp. Electing Sec. 936.
1000	1545–1558	Rev. Proc. 98–46 (modifies Rev. Proc. 97–43)—Procedures for Electing Out of Exemptions Under Section 1.475(c)–1; and Rev. Rul. 97–39, Mark-to-Market Accounting Method for Dealers in Securities.
100000	1545–1559	Revenue Procedures 98–46 and 97–44, LIFO Conformity Requirement.
2000	1545–1566	Notice 2010–46, Prevention of Over-Withholding of U.S. Tax Avoidance With Respect to Certain Substitute Dividend Payments.
904000	1545–1588	Adjustments Following Sales of Partnership Interests.
10,110	1545–1590*	REG–251698–96 (T.D. 8869—Final) Subchapter S Subsidiaries.
500	1545–1617*	REG–124069–02 (Final) Section 6038—Returns Required with Respect to Controlled Foreign Partnerships; REG–118966–97 (Final) Information Reporting with Respect to Certain Foreign Partnership.
3000	1545–1634	TD 9595 (REG–141399–07) Consolidated Overall Foreign Losses, Separate Limitation Losses, and Overall Domestic Losses.
500	1545–1641	Rev. Proc. 99–17—Mark to Market Election for Commodities Dealers and Securities and Commodities Traders.
50	1545–1642	TD 8853 (Final), Recharacterizing Financing Arrangements Involving Fast-Pay Stock.
1	1545–1646	TD 8851—Return Requirement for United States Persons Acquiring or Disposing of an Interest in a Foreign Partnership, or Whose Proportional Interest in a Foreign Partnership Changes.
75	1545–1647*	Revenue Procedure 2001–21 Debt Roll-Ups.
1,620	1545–1657*	Revenue Procedure 99–32—Conforming Adjustments Subsequent to Section 482 Allocations.
25	1545–1658	Purchase Price Allocations in Deemed Actual Asset Acquisitions.
10000	1545–1661	Qualified lessee construction allowances for short-term leases.
1500	1545–1671	REG–209709–94 (Final—TD 8865) Amortization of Intangible Property.
70	1545–1672	T.D. 9047—Certain Transfers of Property to Regulated Investment Companies (RICs) and Real Estate Investment Trusts (REITs).
470	1545–1675	Treatment of taxable income of a residual interest holder in excess of daily accruals.
23900	1545–1677	Exclusions From Gross Income of Foreign Corporations.
13134	1545–1684	Pre-Filing Agreements Program.
400	1545–1690*	Notice 2000–28, Coal Exports.
400	1545–1699	TD 9715; Rev. Proc. 2015–26 (Formerly TD 9002; Rev Proc 2002–43), Agent for Consolidated Group.
3200	1545–1701	Revenue Procedure 2000–37—Reverse Like-kind Exchanges (as modified by Rev Proc. 2004–51).
2000	1545–1706	TD 9315—Section 1503(d) Closing Agreement Requests.
1800	1545–1711	TD 9273—Stock Transfer Rules: Carryover of Earnings and Taxes (REG–116050–99).
4877	1545–1714	Tip Reporting Alternative Commitment (TRAC) for most industries.
870	1545–1716	Employer-Designed Tip Reporting Program for the Food and Beverage Industry (EmTRAC)—Notice 2001–1.
1897	1545–1717	Tip Rate Determination Agreement (TRDA) for Most Industries.
1250	1545–1718	Source of Income from Certain Space and Ocean Activities; Source of Communications Income (TD 9305—final).
15	1545–1730	Manner of making election to terminate tax-exempt bond financing.
19	1545–1731	Extraterritorial Income Exclusion Elections.
1318	1545–1736	Advanced Insurance Commissions—Revenue Procedure 2001–24.
500	1545–1748	Changes in Accounting Periods—REG–106917–99 (TD 8669/Final).
5950	1545–1752	Revenue Procedure 2008–38, Revenue Procedure 2008–39, Revenue Procedure 2008–40, Revenue Procedure 2008–41, Revenue Procedure 2008–42.
100000	1545–1756	Revenue Procedure 2001–56, Demonstration Automobile Use.
530090	1545–1765	T.D. 9171, New Markets Tax Credit.
500	1545–1768	Revenue Procedure 2003–84, Optional Election to Make Monthly Sec. 706 Allocations.
7700	1545–1774	Extensions of Time to Elect Method for Determining Allowable Loss.
100	1545–1784	Rev Proc 2002–32 as Modified by Rev Proc 2006–21, Waiver of 60-month Bar on Reconsolidation after Disaffiliation.
600	1545–1786	Changes in Periods of Accounting.
300	1545–1799	Notice 2002–69, Interest Rates and Appropriate Foreign Loss Payment Patterns For Determining the Qualified Insurance Income of Certain Controlled Corporations under Section 954(f).
7,500	1545–1801*	Revenue Procedure 2002–67, Settlement of Section 351 Contingent Liability Tax Shelter Cases.
300	1545–1820	Revenue Procedure 2003–33, Section 9100 Relief for 338 Elections.
15,000	1545–1828*	TD 9048; 9254—Guidance under Section 1502; Suspension of Losses on Certain Stock Disposition (REG–131478–02).
100	1545–1831	TD 9157 (Final) Guidance Regarding the Treatment of Certain Contingent Payment Debt Instruments w/one or more Payments that are Denominated in, or Determined by Reference to, a Nonfunctional Currency.
625	1545–1833*	Revenue Procedure 2003–37, Documentation Provisions for Certain Taxpayers Using the Fair Market Value Method of Interest Expense Apportionment.
8600	1545–1834	Revenue Procedure 2003–39, Section 1031 LKE (Like-Kind Exchanges) Auto Leasing Programs.
2,000	1545–1837*	Revenue Procedure 2003–36, Industry Issue Resolution Program.
3200	1545–1847	Revenue Procedure 2004–29—Statistical Sampling in Sec. 274 Context.
24,000	1545–1855*	TD 9285—Limitation on Use of the Nonaccrual-Experience Method of Accounting Under Section 448(d)(5).
50	1545–1861	Revenue Procedure 2004–19—Probable or Prospective Reserves Safe Harbor.
3000	1545–1870	TD 9107—Guidance Regarding Deduction and Capitalization of Expenditures.

Burden hours	OMB No.	Title
1500	1545–1893	Rollover of Gain from Qualified Small Business Stock to Another Qualified Small Business Stock.
3000	1545–1905	TD 9289 (Final) Treatment of Disregarded Entities Under Section 752.
200	1545–1906	TD 9210—LIFO Recapture Under Section 1363(d).
76190	1545–1915	Notice 2005–4, Fuel Tax Guidance, as modified.
552100	1545–1939	Notification Requirement for Transfer of Partnership Interest in Electing Investment Partnership (EIP).
52182	1545–1945	26 U.S. Code § 475—Mark to market accounting method for dealers in securities.
2765	1545–1946	T.D. 9315 (Final) Dual Consolidated Loss Regulations.
250	1545–1965	TD 9360 (REG–133446–03) (Final) Guidance on Passive Foreign Company (PFIC) Purging Elections.
1,985	1545–1983*	Qualified Railroad Track Maintenance Credit.
3,034,765	1545–1986*	Notice 2006–47, Elections Created or Effected by the American Jobs Creation Act of 2004.
12	1545–1990*	Application of Section 338 to Insurance Companies.
150	1545–2001*	Rev. Proc. 2006–16, Renewal Community Depreciation Provisions.
1,700	1545–2002*	Notice 2006–25 (superseded by Notice 2007–53), Qualifying Gasification Project Program.
4950	1545–2003	Notice 2006–24, Qualifying Advanced Coal Project Program.
3761	1545–2004	Deduction for Energy Efficient Commercial Buildings.
171,160	1545–2008*	Nonconventional Source Fuel Credit.
25	1545–2014*	TD 9452—Application of Separate Limitations to Dividends from Noncontrolled Section 902 Corporations.
500	1545–2017	Notice 2006–46 Announcement of Rules to be included in Final Regulations under Section 897(d) and (e) of the Internal Revenue Code.
375000	1545–2019	TD 9451—Guidance Necessary to Facilitate Business Election Filing; Finalization of Controlled Group Qualification Rules (TD 9329).
200	1545–2028	Fuel Cell Motor Vehicle Credit.
35	1545–2030	REG–120509–06 (TD 9465—Final), Determination of Interest Expense Deduction of Foreign Corporations.
100	1545–2036	Taxation and Reporting of REIT Excess Inclusion Income by REITs, RICs, and Other Pass-Through Entities (Notice 2006–97).
2400	1545–2072	Revenue Procedure 2007–35—Statistical Sampling for Purposes of Section 199.
2500	1545–2091	TD 9512 (Final)—Nuclear Decommissioning Funds.
25	1545–2096	Loss on Subsidiary Stock—REG–157711–02 (TD 9424—Final).
120	1545–2103	Election to Expense Certain Refineries.
3000	1545–2110	REG–127770–07 (Final), Modifications of Commercial Mortgage Loans Held by a Real Estate Mortgage Investment Conduit.
26000	1545–2114	S Corporation Guidance under AJCA of 2004 (TD 9422 Final—REG–143326–05).
389,330	1545–2122*	Form 8931—Agricultural Chemicals Security Credit.
1000	1545–2125	REG–143544–04 Regulations Enabling Elections for Certain Transaction Under Section 336(e).
2,700	1545–2133*	Rev. Proc. 2009–16, Section 168(k)(4) Election Procedures and Rev. Proc. 2009–33, Section 168(k)(4) Extension Property Elections.
350	1545–2134*	Notice 2009–41—Credit for Residential Energy Efficient Property.
100	1545–2145	Notice 2009–52, Election of Investment Tax Credit in Lieu of Production Tax Credit; Coordination with Department of Treasury Grants for Specified Energy Property in Lieu of Tax Credits.
300000	1545–2147	Internal Revenue Code Section 108(i) Election.
4500	1545–2149	Treatment of Services Under Section 482; Allocation of Income and Deductions From Intangibles; Stewardship Expense (TD 9456).
250	1545–2150	Notice 2009–58, Manufacturers' Certification of Specified Plug-in Electric Vehicles.
550000	1545–2151	Qualifying Advanced Energy Project Credit—Notice 2013–12.
180	1545–2153	Notice 2009–83—Credit for Carbon Dioxide Sequestration Under Section 45Q.
1,000	1545–2155*	TD 9469 (REG–102822–08) Section 108 Reduction of Tax Attributes for S Corporations.
36000	1545–2156	Revenue Procedure 2010–13, Disclosure of Activities Grouped under Section 469.
1500	1545–2158	Notice 2010–54: Production Tax Credit for Refined Coal.
5988	1545–2165	Notice of Medical Necessity Criteria under the Mental Health Parity and Addiction Equity Act of 2008.
3260	1545–2183	Transfers by Domestic Corporations That Are Subject to Section 367(a)(5); Distributions by Domestic Corporations That Are Subject to Section 1248(f). (TD 9614 & 9615).
694750	1545–2186	TD 9504, Basis Reporting by Securities Brokers and Basis Determination for Stock; TD 9616, TD 9713, and TD 9750.
1000	1545–2194	Rules for Certain Rental Real Estate Activities.
1800	1545–2209	REG–112805–10—Branded Prescription Drugs.
403177	1545–2242	REG–135491–10—Updating of Employer Identification Numbers.
200	1545–2245	REG–160873–04—American Jobs Creation Act Modifications to Section 6708, Failure to Maintain List of Advisees With Respect to Reportable Transactions.
75000	1545–2247	TD 9633—Limitations on Duplication of Net Built-in Losses.
400	1545–2259	Performance & Quality for Small Wind Energy Property.
1800	1545–2276	Safe Harbor for Inadvertent Normalization Violations.
Total: 48,912,072.		

* Discontinued in FY20.

[FR Doc. 2020–24251 Filed 11–2–20; 8:45 am]

BILLING CODE 4830–01–P

DEPARTMENT OF VETERANS AFFAIRS

[OMB Control No. 2900–0089]

Agency Information Collection Activity: Statement of Dependency of Parent(s)

AGENCY: Veterans Benefits Administration, Department of Veterans Affairs.

ACTION: Notice.

SUMMARY: Veteran's Benefits Administration (VBA), Department of Veterans Affairs (VA), is announcing an opportunity for public comment on the proposed collection of certain information by the agency. Under the Paperwork Reduction Act (PRA) of 1995, Federal agencies are required to publish notice in the **Federal Register** concerning each proposed collection of information, including each proposed extension of a currently approved collection, and allow 60 days for public comment in response to the notice.

DATES: Written comments and recommendations on the proposed collection of information should be received on or before January 4, 2021.

ADDRESSES: Submit written comments on the collection of information through Federal Docket Management System (FDMS) at *www.Regulations.gov* or to Nancy Kessinger, Veterans Benefits Administration, Department of Veterans Affairs, 810 Vermont Avenue NW, Washington, DC 20420 or email to *nancy.kessinger@va.gov.* Please refer to ''OMB Control No. 2900–0089'' in any correspondence. During the comment period, comments may be viewed online through FDMS.

FOR FURTHER INFORMATION CONTACT: Danny S. Green at (202) 421–1354.

SUPPLEMENTARY INFORMATION: Under the PRA of 1995, Federal agencies must obtain approval from the Office of Management and Budget (OMB) for each collection of information they conduct or sponsor. This request for comment is being made pursuant to Section 3506(c)(2)(A) of the PRA.

With respect to the following collection of information, VBA invites comments on: (1) Whether the proposed collection of information is necessary for the proper performance of VBA's functions, including whether the information will have practical utility; (2) the accuracy of VBA's estimate of the burden of the proposed collection of information; (3) ways to enhance the quality, utility, and clarity of the information to be collected; and (4) ways to minimize the burden of the collection of information on respondents, including through the use of automated collection techniques or the use of other forms of information technology.

Authority: 38 U.S.C. 102, 102, & 1315.

Title: Statement of Dependency of Parent(s) (VA Form 21P–509).

OMB Control Number: 2900–0089.

Type of Review: Extension of a currently approved collection.

Abstract: The Department of Veterans Affairs (VA), through its Veterans Benefits Administration (VBA), administers an integrated program of benefits and services, established by law, for veterans, service personnel, and their dependents and/or beneficiaries. Title 38 U.S.C. 5101(a) provides that a specific claim in the form provided by the Secretary must be filed for benefits to be paid to any individual under the laws administered by the Secretary. VA Form 21P–509 is the prescribed form for to gather income and dependency information from claimants who are seeking payment of benefits as, or for, a dependent parent. This information is necessary to determine dependency of the parent and make determinations which affect the payment of monetary benefits. VA Form 21P–509 is used by a Veteran seeking to establish their parent(s) as dependent(s), and by a surviving parent seeking death compensation. Without this information, determination of entitlement would not be possible.

Affected Public: Individuals and households.

Estimated Annual Burden: 4,000.

Estimated Average Burden per Respondent: 30 minutes.

Frequency of Response: Once.

Estimated Number of Respondents: 8,000.

By direction of the Secretary.

Danny S. Green,

VA PRA Clearance Officer, Office of Quality, Performance, and Risk, Department of Veterans Affairs.

[FR Doc. 2020–24305 Filed 11–2–20; 8:45 am]

BILLING CODE 8320–01–P

DEPARTMENT OF VETERANS AFFAIRS

[OMB Control No. 2900–0856]

Agency Information Collection Activity: Authorization To Disclose Personal Information to a Third Party

AGENCY: Veterans Benefits Administration, Department of Veterans Affairs.

ACTION: Notice.

SUMMARY: Veterans Benefits Administrations, Department of Veterans Affairs (VA), is announcing an opportunity for public comment on the proposed collection of certain information by the agency. Under the Paperwork Reduction Act (PRA) of 1995, Federal agencies are required to publish notice in the **Federal Register** concerning each proposed collection of information, including each proposed extension of a currently approved collection, and allow 60 days for public comment in response to the notice. This form will be used by the Department of Veterans Affairs Insurance Center (VAIC) to enable a third party to act on behalf of the insured Veteran/beneficiary. Many of our customers are of advanced age or suffer from limiting disabilities and need assistance from a third party to conduct their affairs. The information collected provides an optional service and is not required to receive insurance benefits.

DATES: Written comments and recommendations on the proposed collection of information should be received on or before January 4, 2021.

ADDRESSES: Submit written comments on the collection of information through Federal Docket Management System (FDMS) at *www.Regulations.gov* or to Nancy J. Kessinger, Veterans Benefits Administrations (20M33), Department of Veterans Affairs, 810 Vermont Avenue NW, Washington, DC 20420 or email to *nancy.kessinger@va.gov.* Please refer to ''OMB Control No. 2900–0856'' in any correspondence. During the comment period, comments may be viewed online through FDMS.

FOR FURTHER INFORMATION CONTACT: Danny S. Green at (202) 421–1354.

SUPPLEMENTARY INFORMATION: Under the PRA of 1995, Federal agencies must obtain approval from the Office of Management and Budget (OMB) for each collection of information they conduct or sponsor. This request for comment is being made pursuant to Section 3506(c)(2)(A) of the PRA.

With respect to the following collection of information, VBA invites comments on: (1) Whether the proposed collection of information is necessary for the proper performance of VBA's functions, including whether the information will have practical utility; (2) the accuracy of VBA's estimate of the burden of the proposed collection of information; (3) ways to enhance the quality, utility, and clarity of the information to be collected; and (4) ways to minimize the burden of the collection of information on

respondents, including through the use of automated collection techniques or the use of other forms of information technology.

Authority: Public Law 104–13; 44 U.S.C. 3501–3521.

Title: Authorization to Disclose Personal Information to a Third Party, VA Form 29–0975

OMB Control Number: 2900–0856.

Type of Review: Extension of a previously approved collection.

Abstract: This form will be used by the Department of Veterans Affairs Insurance Center (VAIC) to enable a third party to act on behalf of the insured Veteran/beneficiary. Many of our customers are of advanced age or suffer from limiting disabilities and need assistance from a third party to conduct their affairs. The information collected provides an optional service and is not required to receive insurance benefits.

Affected Public: Individuals and households.

Estimated Annual Burden: 100 hours.

Estimated Average Burden per Respondent: 5 minutes.

Frequency of Response: On occasion.

Estimated Number of Respondents: 1,200.

By direction of the Secretary.

Danny S. Green,

VA PRA Clearance Officer, Office of Quality Performance and Risk, Department of Veterans Affairs.

[FR Doc. 2020–24308 Filed 11–2–20; 8:45 am]

BILLING CODE 8320–01–P

FEDERAL REGISTER

Vol. 85 Tuesday,

No. 213 November 3, 2020

Part II

Department of Transportation

Federal Railroad Administration

49 CFR Part 299

Texas Central Railroad High-Speed Rail Safety Standards; Final Rule

DEPARTMENT OF TRANSPORTATION

Federal Railroad Administration

49 CFR Part 299

[Docket No. FRA–2019–0068, Notice 5]

RIN 2130–AC84

Texas Central Railroad High-Speed Rail Safety Standards

AGENCY: Federal Railroad Administration (FRA), Department of Transportation (DOT).

ACTION: Final rule; rule of particular applicability and record of decision.

SUMMARY: This final rule of particular applicability (RPA) establishes safety standards for the Texas Central Railroad (TCRR or the railroad) high-speed rail (HSR) system. These standards are not intended for general application in the railroad industry, but apply only to the TCRR system planned for development in the State of Texas. This rule takes a systems approach to safety, and so includes standards that address the aspects of the TCRR HSR system consistent with the regulatory framework for the general system, but in a manner appropriate to TCRR's technology and application, including signal and trainset control, track, rolling stock, operating practices, system qualifications, and maintenance. The TCRR HSR system is planned to operate from Houston to Dallas, on dedicated track, with no grade crossings, at speeds not to exceed 330 km/h (205 mph). The TCRR rolling stock, track, and core systems will replicate the Tokaido Shinkansen HSR system operated by the Central Japan Railway Company (JRC), and will be used exclusively for revenue passenger service.

DATES: *Effective date.* This final rule is effective December 3, 2020.

Incorporation by reference. The incorporation by reference of the standards listed in the rule is approved by the Director of the Federal Register as of December 3, 2020.

ADDRESSES: *Docket:* For access to the docket to read background documents or comments received, go to *http://www.regulations.gov* at any time.

FOR FURTHER INFORMATION CONTACT: For issues related to the technical safety requirements: Frederick Mottley, Systems Engineer, at (617) 494–3160; Devin Rouse, Mechanical Engineer, at (202) 493–6185; or Michael Hunter, Attorney Adviser, at (202) 493–0368. For issues related to the Record of Decision: Kevin Wright, Environmental Protection Specialist at (202) 493–0845; or Kathryn Johnson, Attorney Adviser, at (202) 493–0407.

SUPPLEMENTARY INFORMATION:

Table of Contents

I. Executive Summary
II. Statutory Authority
III. Proceedings to Date
IV. Discussion of Comments Received on the NPRM
A. Context and Overview
B. Regulatory Approach
C. General Safety Oversight
D. Interference With the Union Pacific Railroad
E. Track Safety
F. Crashworthiness and Occupant Protection
G. Reissuance of NPRM
H. Electrical Arcing From the Overhead Catenary System
I. Right-of-Way Barrier Protection
J. Emergency Response
K. Noise Emission and Vibration
L. Eminent Domain
M. Regulatory Evaluation
N. Enforcement
V. Discussion of Final Rule and Regulatory Changes
A. Non-Substantive Corrections
B. Evaluation of Substantive Changes
1. § 299.5 Definitions
2. Subpart B—Signal and Trainset Control System
3. § 299.345 Visual Inspections; Right-of-Way
4. § 299.347 Special Inspections
5. § 299.713 Program Approval Procedures
C. Trainset Image Recording System
D. Decision Under 49 U.S.C. 20306, Exemption for Technological Improvements
E. Incorporation by Reference
VI. FRA's Record of Decision
A. Summary of Alternatives Considered
1. No Build Alternative
2. Build Alternatives
B. Environmentally Preferable Alternative
1. Environmentally Preferable Build Alternative
2. Environmentally Preferable Houston Station Option
C. Mitigation Commitments
VII. Regulatory Impact and Notices
A. Executive Orders 12866 and 13771, and DOT Regulatory Policies and Procedures
B. Regulatory Flexibility Act and Executive Order 13272; Regulatory Flexibility Assessment
C. Paperwork Reduction Act
D. Federalism Implications
E. International Trade Impact Assessment
F. National Environmental Policy Act
G. Executive Order 12898 (Environmental Justice)
H. Clean Air Act/Air Quality General Conformity
I. Section 106 of the National Historic Preservation Act
J. Department of Transportation Act Section 4(f) Determination
K. Endangered Species Act/Section 7 U.S. Fish and Wildlife Service Biological Opinion
L. Executive Order 11990 Preservation of the Nation's Wetlands (Executive Order 11990 & DOT Order 5660.1a)
M. Floodplain Management (Executive Order 11988 & DOT Order 5650.2)
N. Executive Order 13175 (Tribal Consultation)
O. Unfunded Mandates Reform Act of 1995
P. Energy Impact

I. Executive Summary

On August 30, 2019, FRA granted TCRR's rulemaking petition (petition), which was submitted April 16, 2016.[1] The petition proposed comprehensive safety requirements for the application of JRC's Tokaido Shinkansen technology, and its associated design and engineering principals. TCRR's petition represented that the regulatory requirements offered by TCRR translate the technological and operational aspects of the JRC Tokaido Shinkansen system in a manner that can be regulated under a framework similar to other US passenger rail operations while maintaining the integrity of the safety case developed by JRC over 50 years of experience operating high-speed trains.

The Tokaido Shinkansen system first went into service on October 1, 1964, under the operation of the Japanese National Railways (JNR). On April 1, 1987, JNR was privatized and split into six passenger railroads and a freight railroad. JRC took over operations of the Tokaido Shinkansen system in Central Japan, and is still operating the system today. In over 50 years of Tokaido Shinkansen system operations, JNR, and now JRC, have optimized operations to a very high level of safety and performance. The Tokaido Shinkansen system has moved over 6 billion passengers without a passenger fatality or injury due to trainset accidents such as a derailment or collision.

TCRR intends to implement a high-speed passenger rail system by using the Tokaido Shinkansen system's service-proven technology and by replicating JRC's operational and maintenance practices and procedures. TCRR plans to implement the latest, service-proven derivative of the N700 trainset and other core systems currently in use on the Tokaido Shinkansen line,[2] which have been refined for high-speed operations over the last 50+ years. TCRR plans to adapt the N700 series trainset and supporting systems in a manner suitable for the Texas environment and operate under a regulatory framework that

[1] TCRR supplemented its petition in August 2016, and submitted an updated petition in September 2017.

[2] Subsequent references to ''N700'' or ''N700 series trainset'' are meant to refer to the N700 series trainset currently in, or future variants approved for, use.

enables FRA to provide effective safety oversight.

FRA has evaluated the economic burden that the final rule would have on TCRR. Discussion of this can be found under section VII. A. Executive Orders 12866 and 13771, and DOT Regulatory Policies and Procedures. FRA concluded that because this final rule generally includes only voluntary actions, or alternative action that would be voluntary, the final rule does not impart additional burdens on TCRR.

Further, this document also contains FRA's Record of Decision with respect to the environmental review conducted pursuant to the National Environmental Policy Act (NEPA), as discussed in section VI. FRA's Record of Decision.

Except for the changes discussed under sections V. A. Non-substantive Corrections and V. B. Evaluation of Substantive Changes, FRA is adopting the rule text of the NPRM otherwise unchanged in this final rule.

II. Statutory Authority

Under the Federal railroad safety laws, FRA has jurisdiction over all railroads, as defined in 49 U.S.C. 20102, except urban rapid transit operations that are not connected to the general railroad system of transportation (general system). Moreover, FRA considers a standalone intercity railroad line to be part of the general system, even if it is not physically connected to other railroads (as FRA has previously stated with respect to the Alaska Railroad; 49 CFR part 209, appendix A). FRA considers the contemplated TCRR system as intercity passenger rail, not urban rapid transit. Accordingly, the TCRR system will be subject to FRA jurisdiction, whether it connects to the general system or not. Please see FRA's policy statement, contained at 49 CFR part 209, appendix A, discussing in greater detail FRA's jurisdiction over passenger railroads, which includes discussion on how FRA characterizes passenger operations.

FRA has a regulatory program in place, pursuant to its statutory authority, to address equipment, track, operating practices, and human factors in the existing, conventional railroad environment. However, significant operational and equipment differences exist between TCRR's system and existing passenger operations in the United States. In many of the railroad safety disciplines, FRA's existing regulations do not address the safety concerns and operational peculiarities of the TCRR system. Therefore, to allow TCRR to operate as envisioned, an alternative regulatory approach is required to provide safety oversight.

III. Proceedings to Date

On March 10, 2020, FRA published a notice of proposed rulemaking (NPRM).[3] The NPRM proposed safety standards to enable safe operations and an alternate method for Federal safety oversight. The NPRM also opened the public comment period, which was initially scheduled to close on May 11, 2020.

On March 12, 2020, FRA announced that it was holding three public hearings on the NPRM, and was conducting proceedings under 49 U.S.C. 20306.[4] Those hearings were to be held in Dallas, Navasota, and Houston, Texas, between March 31 and April 2, 2020. However, in light of the President's March 13, 2020, national emergency declaration, *Proclamation on Declaring a National Emergency Concerning the Novel Coronavirus Disease (COVID–19) public health emergency,* and the Centers for Disease Control and Prevention (CDC) guidance to cancel mass gatherings of people,[5] FRA postponed the three public hearings on March 30, 2020.[6]

On April 16, 2020, FRA announced, consistent with CDC guidance advising against in-person gatherings, that it decided to convene the three public hearings, and to conduct proceedings under 49 U.S.C. 20306, telephonically between May 4th through 6th, 2020.[7] The choice to conduct these hearings telephonically represented merely a change in the manner of public engagement. Also, in the same announcement, FRA extended the comment period to May 26, 2020, so that members of the public would have adequate time to review and provide written comments on the transcripts of the three public hearings conducted. Further, FRA addressed the numerous requests it received to not hold ''virtual hearings,'' due to concerns over the lack of reliable high-speed internet access, and/or to postpone hearings until they can be safely held in-person.

In response to public comments, FRA explained that it decided to hold telephonic hearings, capable of accommodating the same number of participants as previously scheduled in-person hearings, as it was consistent with ensuring public health and that no technology beyond a telephone was necessary for participation. Moreover, FRA explained that there was no need to further postpone the public hearings or further extend the comment period given the extensive public outreach already conducted related to this proposed rule, and the supplementary nature of the public hearings as related to the opportunity to provide detailed written comments on the proposed rule.

FRA conducted the three telephonic public hearings, and proceedings under 49 U.S.C. 20306, as scheduled and the comment period closed on May 26, 2020. FRA is aware of concerns that the publication of the final environmental impact statement (EIS) effectively cut off the comment period for the NPRM on May 15, 2020. Those concerns are unfounded. The Final EIS stated that—

> As of the execution of this Final EIS on May 15, 2020, oral comments made during the public hearings and written comments submitted to the Docket have raised no new substantive issues relevant to environmental concerns from those received during the public comment period of the Draft EIS (discussed in Section 9.6.2, Public and Agency Involvement, Draft EIS Comment Period, and Appendix H, Response to Draft EIS Comments) or on topics not already covered within this Final EIS. FRA will continue to evaluate comments received during the comment period for the Proposed Rulemaking. FRA will address comments on technical safety requirements proposed in the NPRM in the Final Rule, which will be published in the **Federal Register**.[8]

It is clear from the text of the Final EIS that FRA did not close the rulemaking comment period on May 15, 2020. Rather, FRA informed the public that FRA was not able to consider in the Final EIS comments submitted on the NPRM that were received by FRA after May 15, 2020. This was necessary to allow for printing and distribution of the Final EIS. However, the text of the Final EIS clarified that FRA continued to consider comments submitted during the rulemaking comment period.

IV. Discussion of Comments Received on the NPRM[9]

During the 77-day comment period, FRA received 287 written submissions providing comments on the NPRM and had fifty-two individuals provide testimony during the three days of public hearings. As discussed below, not all comments necessitated a response in this final rule, but all comments were carefully and thoroughly considered.

Although FRA's responses to comments, discussed below, generally

[3] 85 FR 14036.

[4] 85 FR 14449.

[5] *See https://www.cdc.gov/coronavirus/2019-ncov/community/large-events/mass-gatheringsready-for-covid-19.html.*

[6] 85 FR 17527.

[7] 85 FR 21159.

[8] *See* Docket FRA–2019–0068, Final Environmental Impact Statement at ES–5.

[9] Comments submitted regarding the Final EIS are addressed below, under section VII. F. National Environmental Policy Act.

address issues raised in comments critical of the rulemaking or TCRR, or both, FRA also received comments supportive of the rulemaking or TCRR, or both. Commenters providing support ranged from members of the public, to various railroad or railroad-related associations, to State and Federal elected officials. As these supportive commenters did not raise any substantive issues regarding the technical safety requirements proposed in the NPRM, FRA has not provided a response to those comments in this final rule.

FRA also received comments requesting that FRA either extend the comment period or otherwise postpone the issuance of this final rule, or objecting to the telephonic hearing format or the notice provided for the public hearings. These comments are addressed above, in section III. Proceedings to Date.

FRA did not provide responses in this final rule to comments that were considered either outside the scope of the rulemaking, or that raised issues that were previously raised to FRA as part of the environmental review process, which FRA addressed and responded to in the Final EIS released on May 29, 2020, available for review on FRA's website for the environmental review of the proposed Dallas to Houston High-Speed Rail.[10]

FRA's responses below address the remaining comments received. These comments were either critical of the rulemaking or raised issues necessitating further explanation or clarification. As multiple commenters raised similar issues, FRA organized its responses so that like-issues are grouped together.

A. Context and Overview

FRA received comments regarding the timing of the rulemaking in relation to the timing of the EIS. Commenters expressed confusion over how the rulemaking and NEPA processes, and the final rule and the EIS relate to each other. Commenters were concerned about FRA granting a ''safety permit'' without conducting surveys of the entire right-of-way (ROW), or other types of analyses (such as a hazard analysis). In addition, commenters raised concerns about the timing of coordination with other Federal agencies that may need to occur before or during construction.

As discussed in the NPRM, TCRR approached FRA in March of 2014, seeking assistance in understanding how FRA would or could apply its regulations to a high-speed passenger railroad system that replicated the Tokaido Shinkansen HSR system, as operated by JRC.[11] On June 25, 2014, FRA published a Notice of Intent to prepare an Environmental Impact Statement in the **Federal Register**.[12] On December 22, 2017, FRA published its Draft EIS and opened its comment period.[13] FRA stated in the Draft EIS that FRA's regulations at the time did not address safety requirements comprehensively for passenger train operations above 150 mph, such as TCRR's contemplated operation. As such, FRA would need to take some form of regulatory action to ensure the contemplated system would be operated safely, such as issuing an RPA, imposing requirements or conditions by order(s) or waiver(s), or taking some other form of regulatory action.[14] This regulatory action constitutes a Major Federal Action requiring review under NEPA.[15]

The purpose of the NEPA process is to inform the decisionmaker and the public of the potential environmental impacts that may result from the proposed action. As such, the EIS must be finalized before the agency takes the action that is the subject of the environmental review. The Final EIS itself, while a meaningful milestone in the NEPA process, does not permit construction or operations. Rather, the EIS enables FRA to reach a decision that is informed by an understanding of the potential environmental impacts of this rulemaking.

The analysis of potential environmental impacts in the EIS is based on TCRR's conceptual engineering design, which is contained in conceptual engineering reports prepared by TCRR and appended to the Draft and Final EIS. While the conceptual engineering design has been appropriately used to inform the NEPA process, TCRR must complete more thorough engineering and design work to facilitate construction. TCRR will need to consider the agreed upon mitigation and compliance measures[16] and the requirements of this rule as it advances the engineering design. In addition, TCRR must follow all applicable Federal, State, and local requirements, which are separate from FRA's jurisdiction. This includes the Surface Transportation Board (STB), which issued a decision on July 16, 2020, finding that the operation proposed by TCRR is subject to STB jurisdiction.[17]

FRA does not grant any kind of construction approval or permit. Neither does this final rule, by itself, grant any permission or authority for TCRR to operate. Furthermore, this rulemaking does not relieve TCRR of its responsibilities to design, construct and operate a safe railroad. It merely provides alternatives to certain requirements and safety standards, which are more appropriate for the technology and system proposed by TCRR. TCRR must design, operate and maintain its system in compliance with this regulation.

What this final rule does is establish the minimum Federal safety requirements with which TCRR must comply. The publication of this final rule is the beginning for TCRR, not the end, of its continuous obligation to demonstrate compliance with the regulation. FRA will continue to provide safety oversight throughout TCRR's development and testing phases, in addition to during revenue operations. In this manner, the expectations for compliance are no

[10] FRA. *Dallas to Houston High-Speed Rail—Passenger Service from Houston to Dallas https://railroads.dot.gov/environmental-reviews/dallas-houston-high-speed-rail/dallas-houston-high-speed-rail-passenger, Final Environmental Impact Statement.*

[11] 85 FR 14036, 14038.

[12] 79 FR 36123.

[13] 82 FR 60723 and FRA. *Dallas to Houston High-Speed Rail—Passenger Service from Houston to Dallas https://railroads.dot.gov/environmental-reviews/dallas-houston-high-speed-rail/dallas-houston-high-speed-rail-passenger,* Draft Environmental Impact Statement.

[14] While this statement was accurate at the time of publication of the Draft EIS in December 2017, it was incomplete. The Final EIS clarified that it was not just the proposed speed of the TCRR's passenger operations that require FRA regulatory action. As described in the Final EIS, FRA's existing regulations do not adequately address the safety concerns and operational characteristics of TCRR's proposed HSR system. FRA. *Dallas to Houston High-Speed Rail—Passenger Service from Houston to Dallas https://railroads.dot.gov/environmental-reviews/dallas-houston-high-speed-rail/dallas-houston-high-speed-rail-passenger,* Final Environmental Impact Statement, Chapter 1.0, Introduction. Subsequent to the publication of the Draft EIS, in November 2018, FRA published a final rule establishing safety standards for passenger operations up to 220 miles per hour.

[15] FRA. *Dallas to Houston High-Speed Rail—Passenger Service from Houston to Dallas https://railroads.dot.gov/environmental-reviews/dallas-houston-high-speed-rail/dallas-houston-high-speed-rail-passenger,* Final Environmental Impact Statement, Abstract.

[16] FRA. *Dallas to Houston High-Speed Rail—Passenger Service from Houston to Dallas https://railroads.dot.gov/environmental-reviews/dallas-houston-high-speed-rail/dallas-houston-high-speed-rail-passenger,* Record of Decision Attachments, Mitigation Commitments.

[17] Surface Transportation Board Decision, Texas Central Railroad and Infrastructure, Inc. & Texas Central Railroad, LLC-Petition for Exemption-Passenger Rail Line Between Dallas and Houston, Tex., July 16, 2020, Docket No. FD 36025. STB also found that TCRR must file an application under 49 U.S.C. 10901 and 49 CFR part 1150 to seek STB authority to construct and operate its proposed system.

different for TCRR than any other railroad under FRA jurisdiction.

Prior to commencing actual revenue operations, TCRR will need to demonstrate that all the safety critical components system work together as a single, integrated system, pursuant to subpart F of this rule.[18] This involves a number of points of compliance that TCRR will work through over the coming years.

To underscore this point, there are several significant requirements that TCRR must meet. For example, TCRR must demonstrate that the trainset meets the requisite crashworthiness and occupant protection requirements as established under subpart D.[19] Also, TCRR must have its positive train control (PTC) system certified in accordance with 49 U.S.C. 20157 and subpart B of this final rule.[20] Further, TCRR must train and qualify its employees performing safety sensitive functions before those employees engage in their respective work (*i.e.,* drivers will need to be certified under 49 CFR part 240, maintenance employees will need to be qualified in accordance with TCRR's training program established under 49 CFR part 243, *etc.*).[21] Moreover, not only initially, but continuously thereafter, TCRR must demonstrate that its track meets the track safety standards outlined in subpart C. In addition, not only must TCRR comply with the technical safety requirements established in this final rule, it also must comply with the other regulations identified under § 299.3(c), such as part 214, Railroad Workplace Safety; part 219, Control of Alcohol and Drug Use; part 228, Hours of Service of Railroad Employees; and part 270, System Safety Program.

FRA notes that there were questions and concerns raised with respect to the lack of interoperability of the system. However, lack of interoperability is not, per se, a bar to operation in the U.S. It is true that FRA stated in 2016 that it did not envision a network of standalone, non-interoperable HSR systems comprising the nationwide network, but this perspective was built largely on historical precedence and should not be interpreted as a prohibition in any way. And in 2018, FRA stated that standalone systems should continue to be regulated comprehensively (such as through a rule of particular applicability or other specific regulatory action(s)), and on a case-by-case basis, as it is prudent due to the small number of potential operations and the potential for significant differences in their design.[22] Since then, FRA has not seen a proliferation of non-interoperable systems in the U.S. In fact, FRA has seen more potential conventional (steel-wheel-on-steel-rail) operations avail themselves of the Tier III requirements rather than pursuing the more arduous and costly route of being a standalone system. For example, Amtrak's next-generation Acela is in the process of demonstrating that its new trainsets comply with the Tier III requirements. XpressWest, is attempting to conduct Tier III operations between Victorville, CA and Las Vegas, NV (the XpressWest bullet train). And while FRA generally considers matters in the context of the established interoperable general railroad system, FRA's mission is to enable safe, reliable, and efficient movement of people and goods by rail, regardless of the technology used.

B. Regulatory Approach

Several commenters asked why FRA elected to pursue a rule of particular applicability for TCRR. Initially, FRA notes that taking action to provide a regulatory framework to govern the operation of the system proposed by TCRR is consistent with FRA's mission is to enable safe, reliable, and efficient movement of people and goods by rail. Further, as FRA stated when granting the petition to undertake the rulemaking, TCRR's petition demonstrated that TCRR's system would replicate the system and operations of the Tokaido Shinkansen, as operated by JRC, allowing TCRR to take advantage of that system's exemplary 50-year safety record. (Docket FRA–2019–0068, FRA Letter Granting Petition).

As discussed under section III. Regulatory Approach of the NPRM, FRA explained that it was taking this approach as it was consistent with its statement in the Passenger Equipment Safety Standards final rule, published November 21, 2018.[23] FRA considers TCRR a standalone system, as its tracks are not physically connected to the rest of the general system, and would be prohibited from doing so by this regulation. FRA stated in 2018 that a standalone system's regulation would have to bring together all aspects of railroad safety (such as operating practices, signal and trainset control, and track) that must be applied to the individual system.[24] Such an approach covers more than passenger equipment, and would likely necessitate particular ROW intrusion protection and other safety requirements not typically addressed in FRA's more general regulations. With this regulation, FRA continues to believe that addressing proposals for standalone HSR systems in this manner is prudent. Entities considering standalone operations voluntarily assume the higher costs of building new and dedicated infrastructure, knowing they cannot take advantage of the cost savings from sharing existing infrastructure.

Alternatively, FRA could have issued a comprehensive set of waivers from FRA's existing regulations, to the extent permitted by law, under 49 U.S.C. 20103(b), in order to provide regulatory approval to the operation. However, in this case, electing to develop and publish a comprehensive regulation is more efficient. Such a regulation, in addition to providing regulatory approval, institutes a comprehensive regulatory framework, that provides TCRR clarity on the minimum Federal safety standards that it must comply with through technology-specific,[25] performance-based requirements. In addition, it provides the railroad a higher degree of regulatory certainty than waivers, as waivers are revocable, subject to changing conditions, and necessitate renewal, generally every five years. Further, by issuing an RPA, FRA is able to protect the integrity of the system, by establishing regulatory requirements codifying the service-proven technological, operational, and maintenance aspects of the Tokaido Shinkansen HSR system operated by JRC.

C. General Safety Oversight

FRA received a number of comments, both written oral, concerning a lack of adequate safety oversight for TCRR. The commenters expressed general concerns regarding the safe construction of the system, and more specific concerns with construction of the system where it intersects various pipelines. In addition, commenters expressed concerns that no

[18] See the discussion of System Qualification in the NPRM at 85 FR 14036, 14044.

[19] See the discussion of crashworthiness and occupant protection under Trainset Structure of the NPRM at 85 FR 14036, 14039, and under section IV. F. Crashworthiness and Occupant Protection of this final rule.

[20] Please also see the discussion of Automatic Train Control System in the NPRM. 85 FR 14036, 14041.

[21] Please also see section IV. C. 8. Personnel Qualification in the NPRM at 85 FR 14036, 14045, and section IV. G. Reissuance of NPRM of this final rule.

[22] 83 FR 59182, 59186.

[23] 85 FR 14036, 14037; 83 FR 59182.

[24] 83 FR 59182, 59186.

[25] Note, FRA typically tries to craft regulations so that they are technology-neutral and performance-based. Because TCRR's safety case is derived from the use of JRC's technology, and operational and maintenance practices, this regulation was written specifically for that technology to maintain the integrity of the baseline safety case.

one agency would be responsible for the overall safety of the system and for the perceived lack of coordination between three specific Federal agencies: FRA, the Pipeline and Hazardous Materials Safety Administration (PHMSA), and the Federal Energy Regulatory Commission (FERC). As these comments are closely related, FRA will address them together.

DOT does not have plenary authority to regulate every aspect of transportation and is limited to the authority granted to it by Congress. Accordingly, the same is true for each of DOT's operating administrations—the regulatory authority for each one is limited at the Federal level by the scope of authority granted by Congress.

As discussed above in section II. Statutory Authority, FRA's authority to regulate the railroad industry is established in 49 U.S.C. ch. 201. FRA has jurisdiction over all railroads, as defined in 49 U.S.C. 20102, except urban rapid transit operations that are not connected to the general railroad system of transportation. Notably, FRA has broad authority to regulate every area of railroad safety. 49 U.S.C. 20103. But, there must be a nexus to railroad safety for FRA to regulate. However, FRA does not exercise jurisdiction under all of its regulations to the full extent permitted by statute. Based on its knowledge of where the safety problems were occurring at the time of its regulatory action, and its assessment of the practical limitations on its role, FRA decided to regulate something less than the total universe of railroads.[26]

While FRA's jurisdiction is broad, it is not unlimited, and there are some areas where FRA defers to another entity. In practice, FRA exercises its authority through regulations on matters where safety is most effectively addressed at the Federal level, and is necessary to ensure unimpeded interstate commerce, or explicitly required by statute. Some elements of safety are more effectively addressed by other levels of government (*i.e.,* State or local), or by industry itself through the development and maintenance of industry standards and recommended practices. For example, the civil construction of a railroad and its structures are more effectively addressed by State and local requirements that take into account the geotechnical, seismic, and hydrological conditions associated with a local environment. While FRA could assert its safety authority over the design and construction of a railroad bridge, for example, these specific requirements are more effectively addressed and monitored at the State and local level. Similarly, in railroad repair shop environments, where railroads perform maintenance on their equipment, the Occupational Safety and Health Administration provides Federal safety oversight of the work conditions within the shop environment, even though it is a railroad facility and railroad employees are involved.

With that said, FRA clarifies that there is no one agency that is responsible for every aspect of safety as it relates to TCRR. To ensure proper safety of the system, each Federal, State, and local authority must perform its part. FRA will certainly oversee railroad safety where conditions might impact the safe operation of the system, but other agencies will also play a role. Where there are intersections among agencies, appropriate coordination must occur to ensure that the proper agency or entity is enforcing the correct requirements (whether Federal, State, or local), at the appropriate time. In the same spirit, where non-governmental organizations have a potential nexus of safety considerations (*e.g.,* TCRR operations adjacent to Union Pacific Railroad (UPRR) operations), it is expected that those organizations coordinate appropriately with each other in good faith.

In turning to the specific issues raised about safety oversight of the construction of the system, and the safety of the TCRR system in relation to pipelines in the vicinity, FRA clarifies that where a condition impacts the safe operation of the railroad, FRA could intervene to ensure the condition is properly remediated. Although FRA has not exercised its jurisdiction in this area (civil construction), FRA would not be precluded from doing so, should the need arise, to ensure railroad safety. The particular facts of a situation would dictate the appropriate authority to handle the issue.

Generally, TCRR is obligated to comply with PHMSA's safety requirements, including those related to pipeline damage, electrical emissions, and cathodic protection, where there are pipeline crossings. FERC has no jurisdiction or decision-making authority over the construction or operation of TCRR's system. FERC-regulated pipelines occur in the vicinity of the alignment, and relocation and/or maintenance activities of these utilities during the construction of the system may require FERC involvement by the applicable utility providers. PHMSA and FERC requirements are discussed in more detail in Section 3.9.2, Utilities and Energy, Regulatory Context of the Final EIS.[27]

All natural gas utility providers, including Atmos Energy, are required to operate in accordance with operational safety regulations, including regulations promulgated by PHMSA, and would have to consider how external factors might impact their operational safety as the parties communicate and coordinate during planning and development. *Id.*

It is not necessary for FRA to coordinate with PHMSA or FERC in order to develop the minimum Federal railroad safety requirements contained in this final rule. As discussed above, FERC has no involvement during the development of minimum Federal safety standards for the operation of the TCRR system. As TCRR advances from the conceptual engineering that was the basis for the environmental analysis in the Final EIS to design engineering, more detailed information will become available about pipelines that may need to be relocated, which would be subject to FERC jurisdiction. In addition, TCRR is already required to comply with PHMSA requirements regarding pipeline safety applicable to utility crossings, relocations, and/or maintenance activities involving natural gas or hazardous liquid transportation pipelines impacted by TCRR's system. FRA is unaware of any need to amend PHMSA's requirements in light of the contemplated TCRR system.

Although no coordination was necessary, FRA has nonetheless coordinated with both FERC and PHMSA after receiving the public comments regarding pipeline safety and in response to the expressed lack of coordination. Both the EIS and the development of the safety standards in this final rule represent only the beginning of coordination on these issues common to any linear construction project, and FRA would expect TCRR to continue and, as necessary expand, this coordination and engagement as TCRR moves forward.

D. Interference With the Union Pacific Railroad

A number of comments received were focused on the potential impacts to conventional track circuits and signaling technology caused by TCRR's electrified railroad. UPRR submitted

[26] 49 CFR part 209, Appendix A.

[27] FRA. *Dallas to Houston High-Speed Rail—Passenger Service from Houston to Dallas https://railroads.dot.gov/environmental-reviews/dallas-houston-high-speed-rail/dallas-houston-high-speed-rail-passenger,* Final Environmental Impact Statement.

comments expressing these concerns to both the Draft EIS and the NPRM.[28]

FRA notes that the matter of potential interference to conventional track circuits and signaling technology, whether from traction power systems,[29] or other known sources, is a matter that is not unique to the contemplated TCRR operation. The effects and potential interference that can be caused by rail vehicle traction power systems are well-established, and require design-specific and local environmental information to assess. To date, FRA has not promulgated specific regulations addressing the use of traction power systems on railroads holistically, as the matter has been effectively handled by industry standards, local or utility requirements (if applicable), and contractual responsibilities. In this final rule FRA does not deviate from this practice and therefore is not regulating TCRR's traction power system.

Electrified railroads and transit systems operate over and adjacent to rail lines using conventional track circuitry and signaling technology throughout the U.S., including FRA-regulated operations on the Northeast Corridor, and in Pennsylvania, Chicago, northern Indiana, Denver, and San Francisco (specifically the electrification of Caltrain's commuter rail service, currently in progress). Furthermore, numerous light-rail and transit operations utilize traction power systems that operate adjacent to, or in some cases directly on, FRA-regulated properties utilizing conventional signaling technology (*e.g.,* Utah Transit Authority's mid-Jordan extension). FRA points to numerous examples that UPRR itself, operates over or adjacent to 25kVA electrified track, including most notably Denver's A-line, which operates on electrified track directly adjacent to UPRR utilizing the same PTC technology.

Several commenters, including UPRR, provided broad language concerning the need to address potential electromagnetic interference (EMI), but provided no specific justification as to why current industry practice, or the requirements proposed within the NPRM were insufficient. FRA believes the high-level language used by the commenters to describe the hazard, unaccompanied by any supporting technical data, underscores a lack of understanding of the subject matter.

Although commenters did not specify the mechanism by which traction power systems may introduce risk, they may be concerned with the potential for voltages to be induced into parallel conductors (*i.e.,* UPRR's track) which, in turn, could interfere with rudimentary circuit designs and technology being employed by UPRR for track circuit occupancy and grade crossing activation circuits. Commenter references to interference with UPRR's PTC system may likewise relate to the potential for induced voltage that could lead to a track circuit appearing to be unoccupied even though a train may actually be shunting the circuit. This typically occurs with more primitive DC and AC technologies, if not designed to account for such conditions, as those types of primitive technologies cannot decipher the induced voltage from the circuit's own power source. FRA notes that while this is certainly a hazard that must be addressed, such site-specific issues can only be addressed as TCRR proceeds from conceptual to detailed design phases. It is FRA's expectation that TCRR and any affected stakeholders will collaboratively address any potential impacts in the same manner as all other projects have, to date.

Although FRA believes the matter is sufficiently addressed under its current regulatory framework, this final rule addresses traction power system EMI and electromagnetic compatibility (EMC) as it relates to safety critical equipment and systems employed by TCRR. *See* § 299.435(e). This requirement is an adaptation of the electrical systems requirements for Tier II trainsets in 49 CFR 238.425. TCRR proposed applying these requirements to be consistent with deliberations by the Railroad Safety Advisory Committee on a recommended expansion of FRA's Tier III requirements in a future rulemaking. UPRR commented on this requirement contained in the NPRM, but did not understand the requirement, its context, or origins. The requirement under § 299.435(e) is not intended to provide a means for UPRR to negate its responsibilities to ensure that its own systems are designed to protect against undesired inputs and potential interference, as UPRR's suggested modifications and commentary recommend, but rather to illustrate the due diligence performed through the development of the rulemaking. Both FRA and TCRR recognized the importance of EMI/EMC for electrified high-speed railroads, and the inclusion of this requirement will ensure TCRR is responsive to the issue.

UPRR also raised concern over sightlines being reduced at a particular highway-rail grade crossing on UPRR's system due to the possible future placement of a TCRR viaduct support column. UPRR's concern is based on the conceptual engineering provided as part of the environmental review process. Similar to the above discussion on possible EMI with UPRR's signal system, FRA would expect that the two railroads work together, and with the owner of the roadway, to identify and mitigate any hazards associated with reduced sightlines at any impacted highway-rail grade crossing, once final designs are developed. In addition, FRA expects that any localized risk presented regarding these issues would be identified in TCRR's risk-based hazard analysis program under part 270 and mitigated appropriately.

E. Track Safety

Several commenters raised concerns with the potential for buckling of the track structure due to high ambient temperatures in Texas during the summer. These general concerns were supplemented by comments that soil conditions and curvature in the alignment could exacerbate this potential. Many cited challenges UPRR has faced in this regard to support their concerns. A certain set of commenters further argued that an expert report had identified ''sharp curves'' in the alignment as a potential risk when compared to tangent track; while it is factually correct that the probability of rail buckling is higher for a curve compared to tangent track, the commenters seem to have mischaracterized this relationship in this particular instance to support their point. In either case, this regulation addresses this risk in a manner that is consistent with how this risk is managed for all railroads under FRA's jurisdiction, and when combined with JRC's adopted practice, provides a level of engineering and internal rail stress management that is superior to most, if not all, North American practice.

The continuous welded rail (CWR) program, as proposed in the NPRM, is a translation and an adaptation of JRC's designs, standards, and procedures. Like the track and CWR requirements applicable to railroads on the general system under 49 CFR part 213, the track and CWR requirements in this rule are independent of the specific environmental conditions over which they are applied. The governing site-specific geotechnical, drainage, and

[28] *See* Section 3.15, Electromagnetic Fields of the Final EIS for a discussion of the potential impacts associated with the generation of electromagnetic fields.

[29] A tractive power system is a system that provides a means to produce tractive effort to a trainset or motive power unit, *i.e.,* the propulsion system. Most traction power systems utilize the transmission of direct current (DC) or alternating current (AC) electricity by means of an overhead wire or powered third rail to convert electrical energy to tractive effort (the force that accelerates a vehicle along a track).

weather conditions will drive the detailed design of the track and its support structure in order to achieve and maintain compliance with the regulatory requirements. (Please see the discussion under section IV. A. Context and Overview of this final rule.) These safety requirements set the standards that must be maintained by the track and track structure design. In addition, these safety requirements set the operational limitations associated with various track conditions. In effect, these represent variables that the railroad must consider when determining its final designs. If it is not possible to attain the required alignment geometry or maintain a specific track class due to site specific conditions, then the design operating speed must reflect what is safely achievable. Concurrently, safe operational limits will also be validated by comprehensive dynamic tests of the actual revenue trainsets over the entire line, as required under Subpart F. While the variables at play in this rule are specific to TCRR (based on JRC's designs), the fundamental railroad engineering principles and design process is not. To be clear, the conceptual engineering report included as part of the Final EIS does not represent the final design of TCRR's alignment and track structure. This regulation will help TCRR establish a safe, detailed design.

The track safety standards under Subpart C of the final rule translate the track safety standards as implemented on JRC's Tokaido Shinkansen HSR system for TCRR's HSR system. As discussed in the NPRM, the Tokaido Shinkansen's technical safety requirements were developed over many years, and have been highly optimized in conjunction with the rest of the system (*i.e.,* signal and train control, and rolling stock), since service began over 50 years ago. The primary reason for adopting the Tokaido Shinkansen's technical safety requirements for TCRR is to ensure the safety of the TCRR operation by protecting the integrity of the system as established by JRC. These requirements are, in many cases, more stringent than requirements under 49 CFR part 213 that were developed for operation of a broad range of equipment (freight and passenger) over the general network.

Furthermore, the approach JRC takes to manage internal rail stress in the Tokaido Shinkansen system is very different than standard North American practice. The final rule requires TCRR to comply with the JRC approach, to ensure that the integrity of the safety case behind the Tokaido Shinkansen can be maintained. In addition to the comprehensive use of well-designed expansion joints and other engineering means intended to manage internal rail stress caused by thermal (and other) loads, the regulation requires procedures, operational restrictions, or both, for high temperature scenarios that are more advanced and conservative than those employed by North American railroads. For example, these procedures require TCRR to monitor rail temperature continuously, which is far more stringent than the ''average'' temperature approach often used by most railroads. Likewise, a system of reference markers is required to be used on the field side of all track to help proactively identify any track shift that might occur. The ties and fastener system, and the ballast, are specifically engineered for the tonnage and speed of the equipment operating over it to provide maximum resistance to track buckling. This is superior to the practice of most U.S. railroads, which have to design to a general standard since a variety of equipment traverses their track. The comprehensive monitoring of track conditions through temperature, geometry and ride quality readings, in addition to traditional visual inspections, enables the railroad to analyze the conditions of the rail in a manner that is far superior to using only visual observation as suggested by commenters.

A number of comments also focused on the effects that heat can have on CWR, and the fact that alignment curvature can increase horizontal rail forces which could, in-turn, lead to buckling if the track is not sufficiently restrained and internal rail stress is not managed effectively. Many comments focus on concerns associated with a specific curve referred to as the ''Hockley curve.'' These comments primarily stem from Delta Troy Interests, LTD. (Delta Troy), and its commissioned study conducted by the Virginia consulting firm R.L. Banks & Associates, Inc.[30] (RLBA). These comments and the RLBA study attempt to connect an increased probability for buckling to occur in non-tangent (curved) track, and particularly with the Hockley curve, with the fact that non-tangent rail can experience higher lateral rail forces due to thermal expansion. This specific portion of the proposed alignment does not represent a geometrically challenging portion, but Delta Troy indicated that its concern for this portion of proposed alignment is underscored by the fact that it traverses a site of a planned real estate development by the company.

The commissioned RLBA study loosely connects the concern of track buckling with the fact that this particular curve includes a radius that could be near the allowable limit for maximum speed operation. Delta Troy, RLBA, and other commenters, insinuate that a different alignment would enable TCRR to avoid ''numerous sharp curves.'' Whether intentional or not, the comments and RLBA analysis ignore the fact that the Hockley curve (and other similar curves designed to allow for maximum design speed of a high-speed train), by nature, utilize a curve radius that is not fairly compared to the high-degree curvature that can pose a risk for track buckling, particularly when compared to freight railroads that utilize a more economical focused approach to CWR management. To insinuate that the curves are ''sharp,'' and thus intrinsically unsafe as proposed, is simply not true.

The RLBA study attempts to describe the effects of curvature on the potential for track buckling. However, this is an issue that is not unique to TCRR, and there are various means by which track can be designed to address and mitigate these concerns safely. Further, while the RLBA study recognized that the NPRM contained a requirement for the railroad to develop a CWR plan to address internal rail stress related to CWR, the study incorrectly asserts that FRA should dictate specific alignment geometry as a matter of safety. This is not appropriate or necessary, as the safety concern is addressed by the track safety standards and CWR requirements, as described above. Moreover, this final rule addresses these issues in the same manner as all other U.S. railroad operations subject to FRA's jurisdiction.

F. Crashworthiness and Occupant Protection

Some commenters raised concerns regarding the crashworthiness requirements proposed in the NPRM. An examination of these comments, however, suggests that they stem from an incomplete reading of the NRPM. FRA proposed to retain the crashworthiness and occupant requirements established by JRC intended to address potential residual risks to the operation and to ensure the trainset can handle the expected operational loads experienced in the intended service environment.[31] While these requirements are not directly comparable to standard U.S. practice, as the NPRM explains, the service

[30] *See http://www.rlbadc.com.*

[31] 85 FR 14036, 14039.

environment of TCRR's contemplated system is vastly different and presents significantly less risk than conventional North American railroad rights-of-way. *Id.* To adhere to requirements based on hazards that have otherwise been heavily mitigated or eliminated would require significant modification to the existing service-proven trainset design by changing the weight and dynamic characteristics, making it effectively a new trainset design, which would negate the service-proven nature of the system.

Some commenters asserted that FRA is exempting TCRR from any crashworthiness requirements so that the N700 series trainset technology could be imported. This assertion, however, is not supported by the requirements proposed in the NPRM, as FRA makes clear that its approach is to ensure that the trainset is safe for the environment in which it will operate. To this end, FRA is including additional requirements that are not inherent in the JRC approach to trainset structure design. These requirements include a dynamic collision scenario analysis that is designed to address the residual risks that could potentially exist within the TCRR operating environment.[32] Of particular note, in this instance, is the inclusion of the steel coil collision scenario outlined in § 299.403(c). Despite the safety record of JRC's Tokaido Shinkansen system, FRA believes that the North American environment poses unique risks with respect to potential objects that might somehow enter the protected ROW, either by accident or on purpose. In this case, FRA believes that requiring dynamic collision scenario analysis using the 14,000-lbs steel coil scenario derived from existing requirements to protect against risks presented by grade crossings can serve as a conservative surrogate for potential hazards that might be present on the TCRR ROW (*e.g.,* feral hogs, stray livestock, unauthorized disposal of refuse). With the inclusion of this dynamic collision scenario, and adaptations of existing U.S. requirements on emergency systems and fire safety, FRA believes it has reasonably addressed risks unique to the TCRR operating environment in a manner that appropriately considers crashworthiness and occupant protection standards for the operating environment intended, while at the same time keeping intact the service-proven nature of the equipment.

G. Reissuance of NPRM

UPRR commented[33] that FRA needs to re-notice the proposed rule so that it: (1) Adequately considers the safety impact on already existing railroads that will intersect and/or run adjacent to the proposed system; (2) specifically evaluates whether modification of each safety-critical aspect of the Japanese Shinkansen system is needed in order to transplant and implement them in the United States; and (3) provides sufficient detail to enable the public to understand the safety standards, operational requirements, or regulatory framework applicable to TCRR fully. UPRR's comments express concern that the NPRM ''lacks any analysis of the potential disruption to other railroad operations and infrastructure and the consequential safety and economic impacts to communities and the region,'' and the NPRM ''focuses solely on the safety of [TCRR's] operations and neglects to consider the potential impact on safety of current rail operations; operations that are fully compliant with existing FRA regulations.''[34]

FRA received a similar comment from Delta Troy.[35] Delta Troy identified six ''deficiencies'' that ''plague the safety analysis'' in the NPRM, and elaborated that any attempt to fix the deficiencies in a final rule would be so extensive that the final would look nothing like the NPRM and therefore would not be a ''logical outgrowth'' of the NPRM, thus necessitating FRA to re-notice the proposed rule. The six areas identified by Delta Troy are that the NPRM: (1) Failed to adequately evaluate possible EMI from TCRR to the adjacent UPRR rail line;[36] (2) unreasonably assumed exigent circumstances will not require coupling or uncoupling;[37] (3) failed to examine the safety impact of TCRR's grade separation proposal on the adjacent UPRR rail line;[38] (4) failed to acknowledge or examine the possible increase in truck traffic and grade crossing usage due to TCRR's proposed viaduct;[39] (5) did not recognize that a different alignment could alleviate the risks of heat-induced track buckling and slow orders;[40] and (6) ignored the context and local circumstances in which proposed operations will occur.[41]

FRA responds to Delta Troy's six identified ''deficiencies'' in other areas of this final rule, and so FRA will address UPRR's concerns here. Primarily, UPRR expressed concern with possible EMI resulting from TCRR's contemplated system, along with potential increased risk at certain grade crossings, which is addressed in section IV. D. Interference with the Union Pacific Railroad. What remains are essentially concerns regarding whether the requirements of the rule, as they were proposed, properly account for the effect on safety of adjacent railroads, that FRA has somehow deprived the public of a meaningful opportunity to comment, and that the requirements are consistent with the requirements of JRC.

UPRR stated in its comment that the NPRM was conclusory in its approach in ''importing'' the Shinkansen's regulatory framework without properly accounting for the effect on the safety of other existing rail operations or of the costs imposed on those other rail operations.[42] However, FRA expects that the final rule framework would have no direct bearing on the safety of UPRR's operation, assuming it is in compliance with its own requirements to protect its systems from electrical interference. FRA makes clear that it is imposing its own regulatory regime on TCRR. As discussed above, this rulemaking is translating the safety-critical technical requirements as implemented on JRC's Tokaido Shinkansen system to allow FRA to provide effect safety oversight, as discussed in the NPRM.[43]

UPRR also stated that FRA has deprived the public of a meaningful opportunity to comment. FRA disagrees and has clearly met the minimum requirements of the Administrative Procedure Act (APA). Under 5 U.S.C. 553(b)(3), when engaged in rulemaking, an agency is required to provide notice of a proposed rulemaking to the public through publication in the **Federal Register**, and shall, among other things, include either the terms or substance of the proposed rule, or a description of the subjects and issues involved. The NPRM, as it explained, was based on the petition and associated supporting

[32] This reference to ''operating environment'' or ''environment in which the equipment will operate'' or other similar references, means, in this discussion, the fully dedicated, fully grade-separated ROW that is not comingled with any other type of equipment (freight or passenger).

[33] Docket No. FRA–2019–0068, Document ID: FRA–2019–0068–0316.

[34] *Id.*

[35] Docket No. FRA–2019–0068, Document ID: FRA–2019–0068–0315.

[36] *See* section IV. D. Interference with the Union Pacific Railroad of this final rule.

[37] *See* sections IV. J. Emergency Response and V. D. Decision under 49 U.S.C. 20306, Exemption for technological improvements of this final rule.

[38] *See* section IV. D. Interference with the Union Pacific Railroad of this final rule.

[39] *See* section IV. D. Interference with the Union Pacific Railroad of this final rule.

[40] *See* section IV. E. Track Safety of this final rule.

[41] *See* section IV. J. Emergency Response of this final rule.

[42] *See also* section IV. M. Regulatory Evaluation of this final rule.

[43] 84 FR 14036.

technical information, all of which was made available for public review and scrutiny.[44] In addition, the NPRM exceeded the statutory requirement to provide merely the substance of the proposed rule, by providing the entirety of the proposed rule text for critical examination by interested members of the public.

In a related concern, UPRR stated that it was unclear what FRA meant when it used the terms ''shall be based on'' in the regulatory text, when referring to requirements for TCRR. For example, under § 299.707, FRA is requiring that TCRR's initial maintenance schedules, included as part of its inspection, testing, and maintenance program, be based on those maintenance schedules in effect on JRC's Tokaido Shinkansen system. UPRR asserted that the use of this reference created ambiguity to the degree that it denied the public a meaningful opportunity to comment. Again, FRA disagrees. FRA is unclear as to what ambiguity exists in light of the information in the rulemaking docket, in both meeting presentations and associated section analyses, provided by TCRR.[45] FRA placed this information in the docket, to allow interested members of the public to scrutinize and provide comment. As part of those documents, the maintenance intervals in effect on JRC at the time of submittal of the documents was included. As part of the inspection, testing, and maintenance program review and approval process under this final rule, TCRR must demonstrate how its initial maintenance intervals replicate those of JRC. FRA would expect TCRR to include the most current maintenance intervals in use by JRC for the Tokaido Shinkansen.

Along with the claims discussed above, UPRR raised several comments regarding some of the regulatory text associated with §§ 299.13(c)(3), 299.207, 299.209, 299.215, 299.341, and 299.351–299.357. The concerns were focused on ensuring that the language of those sections, as proposed in the NPRM, would be consistent with similar requirements for JRC's Tokaido Shinkansen system so that TCRR would be able to replicate the Tokaido Shinkansen properly. UPRR was concerned that FRA did not ensure this consistency and asked FRA to explain in detail whatever differences might exist in a reissued NPRM so that the public could meaningfully participate in the rulemaking process.

FRA believes that UPRR does not understand fully what FRA stated in the NPRM, nor what the rule text is accomplishing for the above-cited sections of this final rule. As discussed in the NPRM, TCRR's petition represented that the regulatory requirements offered by TCRR were translated from the technological and operational aspects of the JRC Tokaido Shinkansen.[46] Each of the above-cited sections referenced by UPRR are either technological or operational in nature.

First, as it relates to the personnel training requirements under § 299.13(c)(3), it is unclear to FRA what precise misunderstanding UPRR has about this proposed requirement. Section 299.13(c)(3) requires TCRR to comply with part 243, which is a performance-based regulation that is designed to accommodate myriad different railroad job functions and personnel qualifications. This part provides a railroad with broad autonomy in determining how its safety-critical employees are categorized and does not dictate in any way the required level of training or qualification of employees as UPRR seems to suggest. Part 243 is designed to help ensure that safety critical roles and qualifications are identified, and that proper adherence to an adequate training program is maintained and documented. JRC's training and qualification program is very thorough and comprehensive and far exceeds the level of employee training, development, and hands-on experience practiced by most, if not all, North American rail operators. As such, TCRR should have no difficulty complying with the requirements of part 243, and TCRR should be able to leverage fully JRC's proven approach to personnel training and qualification.

In a similar vein, UPRR's comment regarding the PTC Safety Plan Content Requirements in § 299.207 is equally perplexing. The PTC requirements proposed are derived from 49 CFR part 236, subpart I, but modified to reflect only those requirements common to all systems, and specific to standalone systems, such as TCRR's. PTC is not a technology itself, but rather a set of performance requirements that establish the minimum functionality a train control system must have, the most fundamental of which are required by statute. PTC terminology used in this context is unique to the U.S. statutory and regulatory requirements. The PTC Safety Plan (PTCSP) is the primary means by which the railroad demonstrates compliance with the requirements in subpart B of this final rule. And, as long as TCRR's train control system, as implemented in Texas, meets the minimum performance and functionality requirements of subpart B, what requirements exist in Japan are irrelevant in relation to PTC, especially as Japan has no equivalent PTC requirement. To put it another way, subpart B requires that TCRR demonstrate that its PTC system, as implemented and installed in Texas, fulfill the minimum safety requirements—it is not intended to prove JRC's technology or its implementation. Likewise, paragraph (a)(6) dictates that TCRR demonstrate the adequacy of its program, but it does not prescribe how TCRR must do so. In this respect, any pertinent training or qualifications required for the successful implementation of JRC's Automatic Train Control (ATC) technology would be expected to be articulated within TCRR's plan and consistent with JRC's training.

With respect to §§ 299.209 and 299.215, these sections were not specifically included in TCRR's petition. However, in TCRR's petition, TCRR stated that it would comply with subpart I of 49 CFR part 236, *in toto.* As further explained in the NRPM, FRA stated that it was tailoring the requirements of part 236, subpart I, to TCRR's standalone PTC system.[47] Sections 299.209 and 299.215 contain virtually equivalent requirements as §§ 236.1029 and 236.1039. And with respect to the cited track sections, §§ 299.341, and 299.351–299.357, TCRR provided FRA the language for these sections, again representing in its petition that they translate the technological and operational aspects of JRC's Tokaido Shinkansen.

In addition, part 299, subpart B of this final rule is a performance standard. This provides TCRR appropriate flexibility in how it complies with the requirements, allowing TCRR to replicate the service-proven, safety-critical aspects of JRC's Tokaido Shinkansen. In its regulatory language, FRA is not requiring TCRR to deviate from JRC practice, but expects TCRR to remain consistent with JRC practice.

In addition to the six ''deficiencies'' noted above, Delta Troy also commented that FRA's NPRM was deficient and contrary to the APA in that it did not provide adequate notice in the docket of an ''economic analysis,''

[44] 85 FR 14036, 14038.

[45] For example, the following provides information on maintenance intervals associated with rolling stock: Docket No. FRA–2019–0068, Document IDs. FRA–2019–0068–0016 ''2017—Exhibit C–8 Subpart J Section Analysis (Inspection Testing and Maintenance),'' FRA–2019–0068–0022 ''2017—Presentation M10P04—N700 Bogie ITM (CI redacted),'' and FRA–2019–0068–0024 ''JRCs Practice on Movement of Defective Equipment (CI redacted).''

[46] 85 FR 14036.

[47] 85 FR 14036, 14041.

and that the NPRM was based on a ''world that no longer exists.''

In support of its assertion that FRA failed to provide adequate notice of an ''economic analysis'' in accord with the APA, Delta Troy argues that it could not find any type of economic analysis despite FRA's repeated mentioning of such an analysis during the telephonic hearings held on May 4–6, 2020. Delta Troy cited to the transcript of the May 6th hearing, noting that on page 3 of the transcript the Hearing Officer stated that the ''purpose of tonight's hearing is for FRA to listen to any interested party's comments on the technical safety requirements proposed in the NPRM along with the associated economic analysis published in the rule's online docket.'' [48] Further, Delta Troy explained that it examined the NPRM and could not find an economic analysis contained in the NPRM, nor in the rulemaking docket.

FRA disagrees. FRA provided its evaluation of the regulatory burden on the regulated entity in the NPRM as it is required to under Executive Order (E.O.) 12866.[49]

In support of its claim that the ''NPRM must be replaced as it is based on a world that no longer exists,'' Delta Troy invokes the coronavirus disease 2019 (COVID–19) public health emergency. Delta Troy asserted that the future of intercity travel will be dramatically different from the recent past. It further asserted that the decision to move forward with the rulemaking was based on projected ridership and train designs that were developed prior to the COVID–19 public health emergency, and thus now must be re-evaluated in light of the current global situation, and no final rule should be issued until the re-evaluation is complete.

While FRA agrees that these are unprecedented times, it disagrees that the rulemaking is obsolete. As explained in section IV. B. Regulatory Approach of this final rule, FRA advanced the rulemaking because TCRR's proposal: (1) Is consistent with FRA's mission is to enable safe, reliable, and efficient movement of people and goods by rail; and (2) demonstrated that the proposed system would replicate the system and operations of the Tokaido Shinkansen system and its 50-year safety record. This rulemaking removes the government barrier to private industry seeking to bring transportation innovations to the United States; FRA's analysis in an E.O. 12866 context properly relates to the effects of government regulatory burdens, and not whether TCRR's proposed operation is financially viable. In addition, the analysis performed under E.O. 12866 as part of the NPRM and this final rule do not rely on ridership estimates or other projections of demand.

To the commenter's assertion that train design must be reevaluated due to the pandemic, the technical safety requirements identified in the NPRM remain valid. FRA is not amending any of its other passenger equipment safety regulations to mandate train designs account for any form of social distancing. FRA expects the railroads and the public to abide by protocols and guidance issued by other Federal agencies, and State and local governments, and does not believe that rulemaking is appropriate.

H. Electrical Arcing From the Overhead Catenary System

A number of commenters raised concern about the ''sparking'' effect often associated with electrified trains. This concern was tied to the fact Atmos Energy maintains a natural gas compression station near the contemplated TCRR alignment, and that a ''spark'' from a passing high-speed train could in-turn ignite some volume of gas present at either the compression station, or pipelines along the route. However, no specific context or evidence was provided to elaborate why the design or operation of either the railroad, the compression station, or a pipeline, provides for a specific risk to adjacent property.

The ''spark'' often associated with electrified train systems is caused when there is a separation between the power source (the catenary system) and its collector (the pantograph on the roof of the train). When this separation occurs, it is possible for current to continue to flow between the power source and collector. In these situations, the high voltage ionizes the air and causes what is known as an electrical arc or ''spark'' between the two components. This occurrence is part of the normal operation of an electrical traction power system like the one proposed by TCRR, and by itself does not pose any particular safety risk. Existing FRA regulations do not cover electrical arcing because of the lack of a particular safety risk. Further, the JRC technology and maintenance practice that is being adopted by TCRR has refined this interface to minimize this arcing effect significantly, and to a degree that is not comparable to what might be witnessed on light-rail or other conventional U.S. electrified operations.

FRA does not believe that this issue requires regulatory action within this rule. However, as this issue has been raised, FRA expects TCRR to work with Atmos Energy, and any other entity to examine the risk, and take whatever precautionary measures that are necessary. To this extent, FRA would expect TCRR appropriately addresses this risk within the context of its System Safety Program, and is willing to provide assistance in coordinating with external entities or regulators, as appropriate.

I. Right-of-Way Barrier Protection

A certain number of comments were raised concerning ROW protection and the potential use of barriers in certain situations. These comments primarily involved the ability of feral hogs to access the track, but also raised questions regarding the protection of TCRR structures and track from UPRR derailments.

With respect to general ROW protection, and specifically the risk posed by local feral hogs, FRA notes that safety is generally established through multiple fronts. In this case, in addition to requirements for ROW protection within this rule under § 299.13(b)(3), FRA also points to its crashworthiness discussion in section IV. F. Crashworthiness and Occupant Protection, above. Most notably, in developing the requirements of this final rule, both FRA and TCRR considered the potential for differences between the Japanese and U.S. operating environments. The existence of animals and other potential obstructions supports the adoption of the final rule requirement to verify the crashworthiness of the trainset structure to protect against the residual risk that might exist beyond even the best ROW protection measures.

As it relates to protection of TCRR structures or ROW from potential incursions due to UPRR derailments, such mitigations are not covered under FRA's current regulations, and protection of bridge piers is typically driven by industry or local standard. Factors that would drive such decisions are highly variable based on specific site conditions (*e.g.,* track centers, curvature, difference in height between top-of-rail, *etc.*) and cannot be adequately addressed globally. FRA expects that once structural designs exist, any localized risk presented would be identified in TCRR's risk-based hazard analysis program under part 270 and mitigated appropriately.

[48] 05.06.2020—TCRR Telephonic Hearing Transcript at page 3, *available at www.regulations.gov,* Docket No. FRA–2019–0068, Docket ID: FRA–2019–0068–0300.

[49] Section V. A. Executive Orders 12866, 13771, and DOT Regulatory Policies and Procedures of the NPRM. 85 FR 14036, 14047.

J. Emergency Response

As part of the public hearing process, several comments were received with respect to emergency response and access for first responders. These comments largely articulated concerns regarding the effect that the absence of certain safety requirements might have on first responders' ability to get inside a trainset, the impact construction might generally have on emergency response times, the ability of first responders to access the ROW, and coordination with local first responders to ensure adequate capability to respond to an emergency on the high-speed railroad. Comments related to the first topic, the ability first responders gaining access to a trainset, are addressed in the discussion regarding safety appliances under section V. D. Decision under 49 U.S.C. 20306, Exemption for technological improvements of this final rule. Those comments related to potential disruptions to normal emergency response routes caused by construction are outside the scope of this rulemaking.[50] FRA defers to local and State officials in the coordination of potential road closures or other impacts to potential emergency response times caused by construction.

As it relates to comments regarding ROW access and TCRR coordination with local first responders, FRA notes that the NPRM proposed to apply all Passenger Train Emergency Preparedness requirements contained within 49 CFR part 239, and is doing so in this final rule. Right-of-way access, coordination, and establishment of the emergency equipment needs and training requirements for local first responders are a part of the planning process required by part 239. Many of these specific planning activities cannot begin in earnest until final ROW designs are developed. This rule only establishes the planning requirements, with the execution of those requirements naturally occurring at a later time, and is identical to the requirements with which all other passenger railroads in the U.S. must comply.

A number of commenters objected to TCRR's limited early engagement with local first responders. Specifically, commenters raised concern with TCRR having asked the local first responders what equipment the first responders thought would be necessary in responding to an emergency on the railroad. Commenters expressed disappointment that TCRR was not advising the local first responders as to the type of equipment TCRR would expect the first responders to have. In addition, commenters noted that TCRR has not provided a list of necessary or required equipment to the local first responders. This appears to be a byproduct of misunderstanding the level of maturity of the system, and the fact that only conceptual design exists at this stage. The actions taken by TCRR at this early stage demonstrate a proactive approach to the matter, and will help inform the railroad on the capability of the local first responders along the alignment. This knowledge will benefit TCRR as it continues to develop the engineering design, and situations such as ladder height, emergency egress and equipment needs, and ROW access capability.

K. Noise Emission and Vibration

Several commenters raised concerns about the noise emission and vibration that will be caused by the passing of the trainset once in service. With respect to noise emission, when looking at § 299.3(c)(3) as proposed in the NPRM and in this final rule, TCRR must comply with 49 CFR part 210, Railroad Noise Emission Compliance Regulations, which prescribes minimum compliance regulations for enforcement of the Railroad Noise Emission Standards established by the Environmental Protection Agency in 40 CFR part 201.

There are no required vibration standards for railroads. However, FRA evaluated the potential impacts resulting from vibration during construction and operation of the HSR system in the Final EIS, and found that while there may be some annoyance impacts due to vibration during construction, no vibration impacts due to operations are anticipated. Nevertheless, the Final EIS identified mitigation measures for potential noise and vibration impacts, which includes compliance with local regulations on noise and vibration as well as conducting additional noise and vibration assessments and monitoring noise and vibration during operations testing.[51] In addition, where construction activities such as pile driving for structures and vibratory compaction for ground improvements would occur within 50 feet of underground utilities, TCRR would coordinate with the utilities to identify where relocation and/or encasement would be needed to avoid vibration damage from nearby construction, and compensate the utilities for such work.[52] TCRR has agreed to implement the identified mitigation. *See* section VI. C. Mitigation Commitments, of this final rule.

L. Eminent Domain

One commenter raised the issue of eminent domain and asked FRA what influence its Federal actions would have on any eminent domain issue. To the best of FRA's knowledge, eminent domain powers under the Fifth Amendment of the U.S. Constitution are not involved. FRA understands the eminent domain issues to be centered on the interpretation of various Texas State statutes. FRA defers to the State of Texas to interpret its own statutes.

M. Regulatory Evaluation

Several commenters discussed the financial feasibility of TCRR and stated that FRA did not take this into account when it issued the NPRM. However, it is outside FRA's regulatory scope to consider the economic viability of a specific railroad project, so it was not addressed as part of the NPRM.[53] FRA's economic analysis in the NPRM evaluates the impact of the Federal regulatory burden on TCRR operations.[54] FRA's responsibility is to ensure that the railroad industry is operating in a safe manner, not to examine the economic viability of a specific project.

In addition, several commenters asserted that FRA did not adequately account for the costs in its economic analysis. As discussed in the NPRM, FRA concluded that since TCRR's compliance with the requirements in this rulemaking are voluntary, the rulemaking does not impose any additional Federal regulatory burdens.[55] Costs such as equipment design,

[50] While outside the scope of rulemaking FRA considered potential disruptions to emergency response routes in Section 3.16.5.2.2, Safety and Security, Build Alternatives of the Final EIS. TCRR has agreed to implement mitigation to address potential delays. *See* Section 3.16.6.2, Safety and Security, Mitigation Measures of the Final EIS, SS–MM#1, Model Construction Impacts on Emergency Response Times of the Final EIS.

[51] FRA. *Dallas to Houston High-Speed Rail—Passenger Service from Houston to Dallas https://railroads.dot.gov/environmental-reviews/dallas-houston-high-speed-rail/dallas-houston-high-speed-rail-passenger,* Final Environmental Impact Statement, Section 3.4., Noise and Vibration.

[52] *Id.* at 3.4–33.

[53] 85 FR 14036, 14048, FN 10.

[54] In addition, as required by NEPA, FRA considered as part of the EIS the overall direct and indirect impacts to the socioeconomic environment that may occur as a result of TCRR's construction and operation of its proposed project, including employment and earnings, property impacts, property tax and net change in tax revenue. FRA. *Dallas to Houston High-Speed Rail—Passenger Service from Houston to Dallas https://railroads.dot.gov/environmental-reviews/dallas-houston-high-speed-rail/dallas-houston-high-speed-rail-passenger,* Final Environmental Impact Statement, Section 3.14.5.2.3, Economic Impacts.

[55] 85 FR 14036, 14047.

equipment changes, associated studies, and other costs are costs voluntarily assumed by TCRR to create the specific system contemplated by this rule. TCRR petitioned FRA for a rulemaking so it could create a unique HSR system, which does not meet Tier III passenger equipment requirements.

UPRR commented that the rulemaking did not address the effect of the implementation of TCRR's system and on the safety of other entities. UPRR further stated that although TCRR's actions may be considered voluntary, TCRR's system would introduce outside interference on adjacent railroads, which require action and incur cost to address. FRA understands that there could be costs to existing railroads when an adjacent railroad begins operations, these costs will not necessarily occur and FRA is unable to estimate them. These costs are speculative and are difficult to determine because the final designs for the TCRR project are not yet developed. Therefore, these costs are not included in FRA's economic analysis. Further, as explained above in response to UPRR concerns regarding potential interference, FRA expects that the final rule framework would have no direct bearing on the safety of UPRR's operation.

Several commenters also stated that the requirements, as proposed in the NPRM, would have an impact on small entities and FRA did not account for this within its regulatory flexibility analysis. FRA, in conjunction with the Small Business Administration (SBA), has developed a definition of small entities that is used when evaluating the economic impact of regulations. Commuter railroads serving populations of 50,000 or less are considered to be small entities, therefore TCRR is not a small entity and the regulation will not impact any small entities. For further information, please see FRA's discussion of its regulatory flexibility analysis, as required by the Regulatory Flexibility Act [56] and E.O. 13272,[57] under section V. B. Regulatory Flexibility Act and Executive Order 13272; Regulatory Flexibility Assessment of the NPRM [58] and section VII. B. Regulatory Flexibility Act and Executive Order 13272; Regulatory Flexibility Assessment of this final rule.

N. Enforcement

As stated in the NPRM under section IV. F. Enforcement, FRA will publish a civil penalty schedule on its website.[59] Because such penalty schedules are statements of agency policy, notice and comment are not required prior to their issuance, nor are they required to be published in the CFR.[60] Although not required, FRA solicited comment on this subject, but did not receive any comments on the types of actions or omissions under each regulatory section that would subject a person to the assessment of a civil penalty.

FRA also clarifies that other enforcement tools, such as emergency orders, individual liability actions, or compliance orders, are available for FRA to use, as necessary, in providing safety oversight of TCRR.

V. Discussion of Final Rule and Regulatory Changes

A. Non-Substantive Corrections

TCRR, in its comments, pointed out a few instances where FRA had inadvertently included (or failed to include) certain regulatory text that was not submitted in the proposed rule text included with TCRR's petition. In response, FRA is modifying the final rule, but these changes are not substantive.

Under proposed § 299.301(b), FRA included maintenance-of-way (MOW) yards (locations where MOW equipment is stored) when discussing restoration or renewal of track class H2. As track within MOW yards will be classified only as track class H0, it was not correct for FRA to include a reference to yards in this provision. Accordingly, in this final rule, FRA has removed ''yards and'' from paragraph (b).

Under proposed § 299.345, FRA converted a table appearing in TCRR's petition to rule text. The table depicted the frequency of certain types of required track inspections. In converting the table to text, FRA clarified the requirements contained in the table. However, in doing so, there were also some inadvertent errors in the NPRM rule text. Under § 299.345(b)(1), which contains the requirements for safe walkway inspections, FRA failed to include the text from footnote 1 to § 2xx.343(c) from the TCRR petition's rule text. The footnote permitted a visual inspection during overnight hours and, in the event of extreme weather, from the trainset cab in lieu of a safe walkway inspection. To correct this oversight, FRA is adding new paragraph (b)(1)(vii), which permits a visual inspection from the trainset cab or an on-track visual inspection in lieu of a safe walkway inspection in the event of extreme weather. FRA slightly modified the language to make clear that an inspection during the overnight hours is considered an on-track visual inspection.

In addition, under § 299.345(b)(2), FRA proposed requirements for on-track inspections for track other than track located within Train Maintenance Facilities (TMFs) and MOW yards. Proposed paragraph (b)(2)(iii) specified that turn-outs and track crossings were to be inspected at least once a week, with a minimum of three calendar days between inspections. However, FRA inadvertently failed to distinguish between turn-outs and track crossing on ballasted track versus on non-ballasted track. In this final rule, FRA is making that distinction by clarifying that the requirements of § 299.345(b)(2)(iii) apply only to turn-outs and rail crossings on ballasted track. FRA has added new paragraph (b)(2)(iv) for non-ballasted track, which specifies that turn-outs and rail crossings on non-ballasted track shall have an on-track inspection conducted at least once every two weeks, with a minimum of six calendar days between inspections. This is consistent with the rule text in TCRR's petition.

Under § 299.345(b)(3), FRA inadvertently restricted the conduct of on-track inspections to ''during maintenance hours.'' Under § 299.301(b), track maintenance in MOW yards and TMFs is not restricted to maintenance hours, as it is for mainline track under § 299.301(a). As such, track inspections can be conducted under traffic conditions, so long as proper on-track safety is provided as required under 49 CFR part 214. Under § 299.3(c), TCRR must comply with 49 CFR part 214 for on-track safety, with the exception of § 214.339. Accordingly, in this final rule, FRA removed ''during maintenance hours'' from § 299.345(b)(3) and added new paragraph (b)(3)(iii) to make explicit the requirement that 49 CFR part 214 (with the exception of § 214.339) be followed for on-track safety within the TMFs and MOW yards when on-track inspections are performed under traffic conditions. Nothing in this discussion should be construed as affecting the general prohibition under § 299.301(a) of performing on-track maintenance or inspections of track, other than track in MOW yards and TMFs, under traffic conditions. In those locations, MOW work and revenue service must still be

[56] 5 U.S.C. 601 *et seq.*

[57] 67 FR 53461 (Aug. 16, 2002).

[58] 85 FR 14036, 14048.

[59] 85 FR 14036, 14046.

[60] 5 U.S.C. 553(b)(3)(A).

temporally separated, as discussed in the NRPM.[61]

Under proposed § 299.609(a), FRA inadvertently left out the word ''types'' after vehicle. In this final rule, FRA has added the word ''types'' to clarify the requirement, which is consistent with FRA practice regarding vehicle/track interaction qualification.

In addition to the above changes, FRA also made several minor technical changes. Under § 299.315(g), FRA removed an incorrect cross-reference to § 299.337 as the term ''vehicle type'' is not used in § 299.337. Under § 299.407(d), FRA changed ''emergency window exit'' to ''emergency egress window'' for consistency of term use. FRA made the same change for the same reason to § 299.427. Finally, under § 299.439(b), FRA fixed an incorrect reference to ''this paragraph'' and correctly changed the reference to ''paragraph (c) of this section.''

B. Evaluation of Substantive Changes

1. § 299.5 Definitions

In its comments, TCRR requested that FRA make some changes to the rule text to help remove ambiguity. Under § 299.5, TCRR requested that FRA amend the proposed definition of ''passenger equipment.'' In support of its request, TCRR stated that the proposed definition implied that TCRR's trainsets would be approved for use on JRC's Tokaido Shinkansen HSR system, which TCRR commented is not correct. While TCRR's trainset will be based on current or future variants of the N700 series trainset approved for use on the Tokaido Shinkansen HSR system, TCRR's trainset itself will not be approved for use on the Tokaido Shinkansen HSR system, as it has fewer passenger cars than what JRC runs. Accordingly, TCRR requested that FRA change the definition of ''passenger equipment'' to mean the N700 series trainset that is based on trainsets currently in service, or future variants operated on, JRC's Tokaido Shinkansen system, or any unit thereof. FRA agrees and has made the change in this final rule. To be clear, the term ''passenger equipment'' is referring to the N700 series passenger trainset that TCRR will operate on its system, which is based on the trainset in use presently, or future variants thereof, by JRC on the Tokaido Shinkansen HSR system. What is important is not whether the TCRR trainset has been approved for use on the Tokaido Shinkansen HSR system, but that it is based on that technology and complies with the requirements of this rule.

In addition, under § 299.5, TCRR requested that FRA amend the proposed definition of ''in passenger service/in revenue service.'' In support of its request, TCRR pointed to proposed § 299.13(a)(3), which discussed and defined the requirement for temporally separating scheduled ROW maintenance from revenue passenger operations. TCRR raised a concern in its comment that leaving a passenger trainset properly secured in a station overnight during MOW operations could run afoul of the temporal separation requirement. TCRR further explained that its understanding of the temporal separation requirement under § 299.13(a)(3), as proposed in the NPRM, is that the ROW must be cleared of all revenue service trainsets (including any trainset repositioning moves) in order to ensure trainsets cannot be moved into established maintenance zones. Moreover, TCRR stated that it would not consider a parked, properly secured trainset in a station location to be a revenue service trainset because it would not be actively carrying or available to carry passengers. TCRR further stated that a trainset could be considered available to carry passengers, and thus considered ''in passenger service/in revenue service'' only after receiving power from the overhead catenary system and receiving a pre-departure inspection by the driver. And, as overhead catenary power will be restored to the ROW only after it has been cleared of MOW equipment, with the general control center returning the signal and trainset control system to the state required to protect revenue operations, a trainset could not be considered ''in passenger service/in revenue service'' during MOW operations, thus accomplishing the temporal separation required by the rule. Accordingly, to codify this understanding, TCRR requested that FRA add to the definition of ''in passenger service/in revenue service'' a carve-out that a trainset that is parked and properly secured within a station overnight is not considered to be in revenue service, and thereby it does not need to be cleared from the ROW prior to MOW operations commencing.

The purpose of the temporal separation requirement is two-fold: (1) Protection of passengers in the high-speed trainsets from a collision with heavy MOW equipment; and (2) protection of the MOW employees performing work within the ROW from the risk of being struck by a high-speed trainset. In both situations, the risk involves a moving high-speed trainset. As discussed in the NPRM, removal of overhead catenary power to those sections of the ROW where MOW operations are occurring or planned to occur is a requirement,[62] and without overhead catenary power, a high-speed trainset is incapable of generating tractive power, so those two risks, a collision between a high-speed trainset carrying passengers and MOW equipment, and MOW employees being struck by a high-speed trainset, are heavily mitigated.

However, when looking at the requirements for temporal separation under § 299.13(a)(3), there is a requirement that the railroad must complete its trainset repositioning moves prior to the commencement of MOW operations. Trainset repositioning moves are not considered ''in passenger service/in revenue service,'' but rather considered ''in service,'' as that term was defined in the NPRM, as trainsets being repositioned would not necessarily be available to carry passengers. In addition, as scheduled MOW operations[63] occur outside of revenue service hours, FRA would expect trainsets to be loaded with passengers or available to carry passengers, and thus would not consider trainsets outside of revenue service hours to be ''in passenger service/in revenue service.'' But, they may be considered ''in service.''

Accordingly, FRA is adopting the proposed definition of ''in passenger service/in revenue service'' in this final rule unchanged. But, FRA is amending the definition of ''in service'' to include a fourth exception to address the situation where TCRR has a trainset parked in a station location that is properly secured and has been deemed not in service by the railroad (meaning TCRR is not intending on repositioning or otherwise moving the trainset until the cessation of MOW operations).

2. Subpart B—Signal and Trainset Control System

In its response to the NPRM, TCRR provided several comments and suggested edits with respect to FRA's proposed requirements for a PTC system, the certification process, and TCRR's interpretation of how those requirements should apply to its proposed use of the Tokaido

[61] 85 FR 14036, 14038 and 14043.

[62] 85 FR 14036, 14043.

[63] Unscheduled or emergency MOW operations during revenue service hours to repair a broken rail, for example, requires TCRR to halt revenue service over the affected portion of the right-of-way until the repair work is completed and has been inspected. *See* § 299.301(a) (prohibiting the restoration or renewal of track under traffic conditions that is located other than in TMFs and MOW yards).

Shinkansen ATC technology. FRA finds that many of these comments appear to originate from a misunderstanding of how the term ''system'' is used and what, exactly, FRA must certify under 49 U.S.C. 20157, Implementation of positive train control systems.

TCRR commented on § 299.201(c) and asserted that it does not anticipate the need for any regression testing[64] before FRA certifies TCRR's PTC system. In support of its assertion, TCRR stated that TCRR's system will be based on the service-proven Tokaido Shinkansen ATC system, and TCRR does not anticipate that any changes will be made to safety-critical software prior to obtaining PTC System Certification from FRA. Further, while TCRR does not believe regression testing would be necessary prior to its initial installation of ATC and FRA certification, TCRR does believe regression testing is appropriate for potential changes to its ATC technology that could possibly occur in the future.

As proposed in the NPRM, § 299.201(c) generally authorizes TCRR to conduct field testing of its uncertified PTC system and field regression testing of its FRA-certified PTC system, which could encompass, for example, future modifications to ATC functionality. As proposed, paragraph (c) was not intended to specify what type of tests are required in either instance. The exact tests to be performed are to be defined by the railroad in the development of its PTCSP, particularly with respect to the content requirements in § 299.207(a)(7), (a)(9), and (a)(10). TCRR must demonstrate that its PTC system, as built, fulfills the requirements contained in subpart B. The distinction that TCRR's proposed PTC system is based on a service-proven technology has no bearing in this instance. Under the statutory mandate, FRA must certify that a railroad's PTC system complies with the applicable PTC regulations (in this instance, 49 CFR part 299, subpart B), not the theoretical capability of the technology.[65] What constitutes safety-critical software has yet to be defined in detail by TCRR, as required under § 299.441, and the changes required to be made to the existing ATC software (whether on the executive or application side) have yet to be described.

As such, although the term ''regression testing'' in paragraph (c) is used in the context of post-certification field testing, this is not intended to suggest that this is the only circumstance that would call for regression testing, as several railroads have performed regression testing on an ongoing basis before and after obtaining PTC System Certification from FRA. FRA does not agree with TCRR's reading of § 299.201(c) as requiring regression testing; that paragraph merely authorizes TCRR to conduct various levels of field testing, including regression testing. FRA believes the necessary level of testing and validation should be determined as TCRR's system is developed and implemented, as required under § 299.207.

In its comments, TCRR also asserts that because it plans to use an existing signaling system, the requirement to include a ''description of the safety assurance concepts that are to be used for system development, including an explanation of the design principles and assumptions'' within TCRR's PTCSP (see § 299.207(a)(2)) should only apply only to modifications to its system. TCRR contends that because the system was developed long ago, these principles would not apply in the same manner as they would to a system that is under development. TCRR recommends that paragraph (a)(2) be modified to refer only to safety-critical changes to the ATC system, not the initial version of TCRR's ATC system. FRA disagrees with this perspective.

TCRR is correct that the core safety assurance concepts, design principles, and design assumptions are fundamental to the development of any new system, but they are also equally important in the implementation of existing technology. These core concepts, principles, and assumptions provide a baseline for safety assurance that govern the safe implementation of a system, whether proven or novel. In the case of TCRR, although the ATC system used on JRC's Tokaido Shinkansen HSR system was developed years ago, FRA would expect that the fundamental concepts (*e.g.,* fail safe), essential design principles, and any assumptions critical to the safety case of the system are understood by TCRR in a manner that can be articulated as part of its PTCSP. If TCRR cannot articulate these fundamental concepts, FRA would question how TCRR intends to ensure that the application and installation of the system in Texas is performed correctly. FRA acknowledges that JRC's Tokaido Shinkansen ATC technology has an extraordinary safety record, but TCRR must provide sufficient information in its PTCSP for FRA to certify that the ATC system in Texas fulfills the requirements under 49 CFR part 299, subpart B.

With respect to the requirement to include a complete description of TCRR's verification and validation process in its PTCSP, under § 299.207(a)(5), TCRR proposed that operational data from JRC's Tokaido Shinkansen HSR system would serve to adequately demonstrate that the technology and its functions, as conceived by JRC, have been successfully validated. FRA suspects that TCRR's interpretation comes from its perception that this requirement, and the corresponding requirement in 49 CFR 236.1015(d)(5), are intended for the validation and verification of a new system under development. FRA would like to make clear that a verification and validation process is essential to the implementation of any system, whether new or previously certified. The actual application of a technology is just as important as its theoretical performance. In this respect, even railroads that are implementing previously certified and type-approved PTC systems have substantial verification and validation processes and tests to ensure that the system, once installed, functions as designed and intended. Operational data from the existing JRC operation would not suffice in this case. As an example, a technology may be proven to effectively enforce civil speeds (*i.e.,* speed limits), but if the installation or application design is not correct, the cab signal code or track chart could allow for a maximum authorized speed that is not consistent with the safe civil speed required for a particular curve. Errors such as this are not uncommon when considering the volume of work that must be performed to install a system on hundreds (or thousands) of miles of track, and thus the verification and validation process is critical for the safe implementation of any train control system.

In its comments, TCRR further recommended changes to § 299.207(a)(18) to specifically reference the Tokaido Shinkansen system as being the baseline for comparison with TCRR's system. However, the modification is unnecessary for TCRR to reference the Tokaido Shinkansen as the baseline for comparison. As TCRR correctly identified, this requirement is derived from 49 CFR 236.1007(c)(1). FRA believes that, when possible, the RPA and the existing PTC requirements for high-speed service should be consistent. TCRR will be able to comply with § 299.207(a)(18), as the provision permits TCRR to use foreign service data in its PTCSP.

FRA is updating the language under § 299.209(e) to directly reference § 236.1029(h). The language of

[64] Regression testing is used to ensure that previously tested software still performs as intended after a change to that software.

[65] 49 U.S.C. 20157(h).

§ 299.209(e) as proposed in the NPRM was based on the language of § 236.1029(h), so the requirement to report has not changed. This is consistent with other sections under subpart B.

In addition, in its comments, TCRR acknowledges that proposed § 299.211 would establish certain security requirements for a PTC system utilizing wireless communications. Although TCRR does not currently intend for its ATC system to utilize wireless communications, TCRR comments that it does not object to retaining this provision in case it utilizes wireless communications in the future. Accordingly, FRA will retain the language under proposed § 299.211, as it mirrors the existing PTC requirements under § 236.1033.

3. § 299.345 Visual Inspections; Right-of-Way

Under § 299.345(b)(3)(i) and (ii), TCRR asked for the inspection frequency to be reduced from twice to once during the relevant period. As proposed, § 299.345(b)(3)(i) and (ii) require TCRR to inspect track within TMFs and MOW yards twice during a 60-day period for ballasted track and twice during a 120-day period for non-ballasted track. TCRR commented that although the rule language as proposed was consistent with the rule text provided with TCRR's petition, it is not wholly consistent with JRC practice. According to TCRR, JRC's practice is to inspect this type of track only once during the relevant periods (a 60-day period for ballasted track and a 120-day period for non-ballasted track). FRA recognizes that the language as proposed under § 299.345(b)(3)(i) and (ii) appears to contain requirements more stringent than what JRC requires on the Tokaido Shinkansen HSR system. Therefore, consistent with FRA and TCRR's goal to replicate JRC's requirements as closely as possible, FRA has made the requested change.

4. § 299.347 Special Inspections

TCRR requested in its comments that FRA amend the language of proposed § 299.347. As proposed, § 299.347 contains requirements for TCRR to conduct a special inspection of its track and ROW prior to the operation of a trainset in the event of fire, flood, severe storm, or temperature extremes that could damage the track structure. TCRR pointed out, though, that the language of proposed § 299.347 prohibits movement of a trainset, regardless of location in the ROW (*e.g.,* between stations), until an inspection has been performed. TCRR also stated that JRC has certain operating rules that would permit movement of a trainset to the next forward station location prior to an inspection so long as specific criteria were met. TCRR offered as an example if operations were suspended due to a heavy rainfall, defined by an amount of rain measured by that segment's rainfall gauge over a specific time interval preceding the trainset movement, a trainset would be allowed to move to the next station at a speed not to exceed 30 km/h (18.6 mph). Accordingly, TCRR requested that FRA amend the language of this section to require inspections of the track and ROW to be performed as soon as possible after the occurrence of a fire, flood, severe storm, temperature extremes, or other types of events that may cause damage to the track structure, in accordance with the railroad's inspection, testing, and maintenance program, and operating rules.

FRA agrees that an event may occur while a trainset is en route between stations that would halt the operation of the trainset prior to reaching the next station and trigger a special inspection, as proposed in the NPRM under § 299.347. Because of this, FRA has updated this section in the final rule. FRA has designated the previously undesignated text as paragraph (a) and added a new paragraph (b) to allow a trainset that is between stations to proceed to the next forward station at restricted speed, not to exceed 30 km/h (18.6 mph) after an event contemplated by this section occurs. This allows for the movement of passengers to a station so they are not stranded in the ROW until an inspection of the track and ROW can be performed. However, FRA makes clear that no trainset may depart a station location until a special inspection of the effected track and ROW can be performed. This new paragraph (b) is only to permit the movement of passengers to the next station that would otherwise be stranded between station locations. Should the track and/or ROW be discovered to be damaged so as to put the safety of the passengers in jeopardy, then the movement is expected to stop until the track is inspected by a qualified person, and the qualified person makes a determination that movement can safely proceed.

5. § 299.713 Program Approval Procedures

TCRR further requested that FRA amend the language of § 299.713(c)(2) as proposed in the NPRM. As proposed, § 299.713(c)(2) provided the procedures for approval of amendments to the inspection, testing, and maintenance program. Any amendment that relaxes an FRA-approved requirement will be reviewed by FRA within 45 days of receipt of the amendment, by which time FRA will notify TCRR whether the amendment is approved, or if not approved, stating the specific points in which the amendment is deficient. Crucial to this part of the paragraph was that the railroad could not implement the amendment until FRA had approved it. The proposed paragraph further stated that if the railroad wanted to amend the program by making an FRA-approved requirement more stringent, the railroad could implement the amendment prior to receiving FRA approval on the amendment.

Although TCRR generally accepted that the language would address many possible amendments, TCRR commented that there may be situations where it is unclear as to whether the proposed inspection, testing, and maintenance program amendment is making an FRA-approved requirement more stringent or relaxed. Thus, TCRR requested FRA change the language of proposed paragraph (c)(2), such that if the railroad proposes to amend an FRA-approved program requirement that TCRR deems to be more stringent, the railroad is permitted to act immediately to implement the amendment prior to obtaining FRA approval.

FRA is not adopting TCRR's recommendation because FRA finds the language to be sufficiently clear and expects that most situations, as TCRR has acknowledged, will be straightforward in their resolution. For example, if TCRR wishes to perform inspections more frequently than required in its inspection, testing, and maintenance program, FRA would consider TCRR's proposed action as more stringent than what is required. Conversely, if TCRR wishes to perform inspections less frequently than required in its inspection program, testing, and maintenance program, FRA would consider TCRR's proposed action as less stringent than what is required, and TCRR must have FRA approval before implementing the change. When there is a question as to whether TCRR's proposed action is making a requirement more stringent or relaxed, FRA would expect TCRR to either treat the action as relaxing, triggering FRA review, or to contact FRA to inquire.

C. Trainset Image Recording System

In the NPRM, FRA proposed to make applicable to TCRR the requirement to have an image recording system installed on its trainsets, consistent with FRA's Locomotive Image and Audio Recording Devices for Passenger Trains

NPRM.[66] As discussed in the TCRR NPRM, FRA stated that once the image recording device rulemaking was finalized, that FRA would make conforming changes to this final rule's regulatory text. However, as FRA has not yet published the image recording devices final rule, FRA will make any necessary changes to this regulation as part of that rulemaking.

D. Decision Under 49 U.S.C. 20306, Exemption for Technological Improvements

As discussed in the NPRM, FRA's safety appliance regulation is based on longstanding statutory requirements for individual railroad cars used in general service. These requirements are primarily intended to keep railroad employees safe while performing their essential job functions. Historically, these duties have revolved around the practice of building trains by switching individual cars or groups of cars, and are not directly applicable to how modern high-speed passenger equipment is designed and operated. The application of such appliances would require a significant redesign of HSR equipment, and would create aerodynamic problems, particularly with respect to associated noise emissions. In the NPRM, FRA proposed to exempt TCRR from statutory requirements that are not applicable or practical for inclusion on its high-speed trainset technology, pursuant to the authority granted under 49 U.S.C. 20306.[67]

Rather than apply legacy requirements that are inappropriate for the proposed equipment's design and service environment, this final rule focuses on how to provide a safe environment for crews as it pertains to the N700 series trainset, and modern high-speed operations throughout the world. In this respect, this final rule defines specific safety appliance performance requirements applicable to this semi-permanently coupled trainset. By focusing on the job functions this approach is expected to: Improve safety for crews and railroad employees; provide flexibility for superior designs based on modern ergonomics; and allow for elimination of appliances when their functionality is moot (*e.g.,* riding on side sill steps despite an inability to couple/decouple cars). FRA believes it is appropriate to grant relief under the discretionary process established under 49 U.S.C. 20306 and adopts these requirements under its statutory authority as part of this rulemaking.

As part of the hearing held on May 4, 2020, FRA conducted proceedings under 49 U.S.C. 20306 to determine whether to invoke its discretionary authority to provide relief to TCRR from certain requirements of 49 U.S.C. ch. 203 for its planned operation of high-speed trainsets built to the requirements contained in this final rule. Under 49 U.S.C. 20306, FRA may exempt TCRR from the above-identified statutory requirements based on evidence received and findings developed at a hearing demonstrating that the statutory requirements ''preclude the development or implementation of more efficient railroad transportation equipment or other transportation innovations under existing law.''

In its rulemaking petition, TCRR requested FRA exercise its discretionary authority under 49 U.S.C. 20306 to exempt its high-speed passenger rail trainsets from the requirements of 49 U.S.C. 20302, which mandates that railroad vehicles be equipped with: (1) Secure sill steps and efficient hand brakes; (2) secure grab irons or handholds on vehicle ends and sides for greater security to individuals coupling and uncoupling vehicles; and (3) the standard height of drawbars. *See* 49 U.S.C. 20302(a)(1)(B), (a)(2), and (a)(3). On May 14, 2020, FRA granted similar relief under 49 U.S.C. 20306 to exempt Amtrak's new high-speed passenger rail trainsets,[68] based on evidence presented at a public hearing held on December 11, 2019. TCRR also testified at this hearing in support of Amtrak's petition and noted its pending need for similar technological exemption. FRA notes no substantive differences in the justification for exemption between TCRR and Amtrak, as both requests pertain to the implementation of modern high-speed passenger rail trainsets. FRA believes its exemption for such technology under Amtrak's petition could be extended to any similar high-speed passenger rail trainset technology, but given the unique nature of this rulemaking, and the overlap in timing between TCRR's petition and FRA's decision to grant Amtrak's petition, FRA felt it was appropriate to conduct proceedings under 49 U.S.C. 20306 as part of the hearing held on May 4, 2020. By taking this approach, FRA could ensure transparency and provide ample opportunity for comment from those most affected by the TCRR proposal.

In support of its request for an exemption, TCRR noted in its petition that safety appliances such as sill steps, or end or side handholds, are typically used in conventional North American practice by maintenance personnel who ride the side of trainsets in yards or maintenance facilities for marshalling operations. The N700 series trainset, as described in this final rule, is a fixed-consist trainset where trainset make-up only occurs in defined locations where maintenance personnel can safely climb on, under, or between the equipment, consistent with the protections afforded under 49 CFR part 218.

In addition, the leading and trailing ends of the N700 series trainset are equipped with an automatic coupler located behind a removable shroud. These couplers, as proposed by TCRR, will only be used for rescue operations in accordance with TCRR's operating rules, and provide for the safe coupling of one trainset to another (*i.e.,* each end will have automatic self-centering couplers that couple to other trainsets on impact, and uncouple by mechanisms that do not require a person to go between trainsets or activate a traditional uncoupling lever). Further, as proposed, level boarding will be provided at all locations in trainset maintenance facilities where crew and maintenance personnel are normally required to access or disembark trainsets. Moreover, because the equipment is a fixed-consist trainset in which individual vehicles are semi-permanently coupled and, as noted above, individual vehicles can only be disconnected in repair facilities where personnel can work on, under, or between units under protections consistent with 49 CFR part 218, having drawbars at the statutorily prescribed height is unnecessary.

As such, there is not a functional need to equip the ends of the trainsets with sill steps, end or side handholds, or uncoupling levers. As this technology is intended to operate at high-speeds, the inclusion of these appurtenances would have a significant and detrimental impact on the aerodynamics of the trainset. This increase in the aerodynamic footprint would negatively impact both efficiency and aerodynamic noise emissions.

TCRR also noted that trainset securement will be provided by the use of wheel chocks in addition to stringent operating rules and procedures, which will be consistent with the service-proven procedures utilized on the Tokaido Shinkansen system. In addition, as proposed in the NPRM, TCRR will be required to demonstrate, as part of its vehicle qualification procedures, that the procedures

[66] 85 FR 14036, 14041; (84 FR 35712, Jul. 24, 2019).

[67] 85 FR 14036, 14040.

[68] *See* docket FRA–2019–0066.

effectively secure the trainset (see § 299.607).

In sum, TCRR asserted that requiring compliance with the identified statutory requirements would serve to preclude the development or implementation of more efficient railroad transportation equipment or other transportation innovations under existing law.

During the hearing conducted on May 4, 2020, TCRR provided testimony in support of its exemption request, which reiterated its position stated in its rulemaking petition, which is summarized below.[69]

TCRR testified that, with respect to couplers being able to couple automatically on impact and capable of being uncoupled without the necessity of an individual going between ends of vehicles, that the inter-car connections and coupling mechanisms on TCRR's trainsets are different than those envisioned by 49 U.S.C. 20302(a)(1)(A). TCRR explained that its trainsets can only be separated at a maintenance facility, as the separation of the trainset requires special tools and procedures to safety disconnect the inter-car mechanical and electrical connections. Separation at a maintenance facility also provides railroad employees needing to go between individual cars proper safety protection. Further, TCRR testified that its trainsets will be equipped with rescue couplers at each end of the trainset in the event a trainset needs to be rescued from the ROW. These rescue couplers are located within a removable shroud at each end of the train set, and are automatic couplers, in that they couple upon impact.

With respect to 49 U.S.C. 20302(a)(2), which requires secure grab irons or handholds on the ends and sides of vehicles for greater security for individuals involved with coupling and uncoupling vehicles, TCRR testified that these are not necessary due to the coupling arrangement of its trainset, described above. TCRR further testified that inclusion of these safety appliances would have a significant and detrimental impact on the aerodynamic performance of the trainset and significantly increase the aerodynamic noise generated from the trainset. TCRR stated that providing an exemption from these requirements is consistent with the treatment of similar equipment.

TCRR further testified with respect to 49 U.S.C. 20302(a)(3), which requires drawbars to be of a standard height as specified by FRA regulation, that TCRR will not conduct any type of joint operation with conventional freight or passenger equipment. Accordingly, as TCRR testified, there is no need to have couplers at a standard height, as TCRR's trainsets will have no need to couple to dissimilar equipment.

TCRR next testified with respect to 49 U.S.C. 20302(a)(1)(B), which requires vehicles to be equipped with secure sill steps and efficient handbrakes, that TCRR's trainset will not be equipped with a handbrake. TCRR further testified that its unattended trainsets will be secured through a combination of an urgent brake application, which is equivalent to an emergency brake application in the U.S., and the use of wheel chocks. According to TCRR's testimony, this is reflective of JRC's practice on the Tokaido Shinkansen system, which has a demonstrated safety record. TCRR also testified that its operating rules will also define securement procedures, which will be based on the service-proven procedures employed by JRC.

TCRR also testified that sill steps and vertical handholds are not necessary for railroad employees to access or disembark from its trainsets. TCRR offered that it will have provisions for high-level boarding at all locations (passenger stations and maintenance facilities) an employee could be expected to access or disembark a trainset.

As noted above, FRA received several comments regarding TCRR's request for exemption. Some comments concerned the effect that the lack of identified safety appliances would have on the ability for TCRR to separate a train in the event of an emergency, while other comments concerned the impact that the absence of said appliance would have to emergency egress and first responder access to the trainset. In both instances, while FRA deeply appreciates the commenters' concerns with respect to the efficacy of emergency response, assisting in emergency rescue access is not the purpose of the safety appliances in question, and in many ways, what TCRR has proposed exceeds common practice for emergency passenger egress and first responder rescue access within the U.S.

In addition, FRA would like to address the comments related to the separation of trains in an emergency. While semi-permanently coupled passenger equipment is virtually universal for high-speed operations, it is also very common throughout conventional passenger and freight operations throughout the U.S., most often seen in Multiple Unit (MU) trainset operations and articulated freight cars (*e.g.,* double-stack well car sets). It is not common practice to break a train apart as part of an emergency procedure. Rescue of an entire disabled trainset is the most common scenario, and TCRR will be equipping its lead units with rescue couplers and other appliances to allow for a disabled trainset to be towed, if necessary. If a train is disabled such that intermediate uncoupling would be required to move it, it would typically be more appropriate to evacuate the impaired train either to a safe location, or by cross-transfer to another trainset, pursuant to the railroad's emergency plans. FRA notes that it is not the intent of the safety appliance requirements to prevent the use of semi-permanently coupled or articulated rail vehicles, whether by statute or regulation. Rather, the purpose of these appliances is to ensure that railroad personnel are provided the means to perform their duties safely, particularly where coupling or switching are common place. Notably, while the absence of such practice reduces the operational flexibility afforded to the railroad, it also serves to reduce the hazards that railroad personnel are exposed to, which, in itself, is a worthwhile application of safe practice being proposed for TCRR.

Notwithstanding FRA's prior statements on this topic, FRA received several comments expressing concern over first responder access to a trainset that is not equipped with traditional safety appliances. As discussed previously, safety appliances are primarily for railroad employee protection. Other rescue access and emergency egress systems are relied on to facilitate the entry of first responders into a trainset, and evacuation of passengers off a trainset, such as rescue access/emergency egress windows and doors, and roof spots, to name a few. *See, generally,* subpart D—Rolling Stock. Although safety appliances, if present, may be used for rescue access and emergency egress, it is not the primary function of these appliances. In addition, the safety appliances that would typically be utilized to access a trainset are not required under statute, and in virtually all cases, are insufficient for emergency egress and access needs.

Safety appliances as not required to be part of the required emergency systems for passenger equipment. Generally, it is FRA's position that the safest location for a passenger during an emergency is within the trainset or passenger car. There are limited circumstances where an evacuation to an adjacent car would be necessary, and

[69] *See* 05.04.2020—TCRR Telephonic Hearing Transcript at page 17–30, *available at www.regulations.gov,* Docket No. FRA–2019–0068, Document ID: 2019–0068–0291.

only in a life-threatening scenario is passenger self-evacuation off a train necessary. In addition, FRA also generally assumes that first responders will have certain equipment with them when responding to an emergency involving a train, to include ladders, axes, portable jaws-of-life, and other access-gaining tools. Furthermore, TCRR's proposal includes the use of deployable ladders with handrails to facilitate egress and access from the trainset to ground level in the event of an emergency or other appropriate situation. The use of such on-board ladders, while not required by this regulation, provide a superior means to get on or off the trainset in such scenarios than any traditional safety appliance, particularly for first responders. Further, not all emergencies require an immediate stopping of the trainset, as it may be more efficient to meet first responders at a dedicated location (such as a station location, or a location where access has been specifically planned for) to permit easier access to the trainset. Understandably, FRA is also aware that there may be emergency situations that will not permit continued travel along the ROW, such as a derailment of the equipment.

FRA also received a comment from Delta Troy challenging the legality of virtual hearings to satisfy the hearing requirement of 49 U.S.C. 20306.[70] In its comment, Delta Troy argued that virtual hearings are not an adequate or sufficient replacement for the value of a public hearing during notice-and-comment rulemaking, in addition to the statutory requirement that findings under 49 U.S.C. 20306 be based on evidence developed ''at a hearing.'' In support of its position, Delta Troy stated that conducting a virtual hearing would necessarily limit and truncate public engagement and discourse. And that ''untold members of the public'' would be precluded from participation because they lack adequate internet access, whether due to financial, technological, or other reasons. In conclusion, Delta Troy stated that a virtual hearing would not meet the requirements of 49 U.S.C. 20306, nor would it comport with ''the spirit of public comment'' as described in the APA. FRA disagrees and notes that 49 U.S.C. 20306 is silent as to the manner in which hearings may be conducted. As discussed under section III. Proceedings to Date, the telephonic hearings that FRA conducted represented only a change in the way information was exchanged. Further, the change to a telephonic hearing was made specifically to address the internet reliability concerns raised by Delta Troy and other commenters.

Based on the evidence developed at the hearing, including supporting information provided in TCRR's rulemaking petition, FRA is providing TCRR with its requested relief, as not doing so would preclude the development or implementation of more efficient railroad transportation equipment. FRA makes clear, though, that this relief will be in effect for high-speed trainsets, used only on TCRR's system, for the life of each variation put into service. If the equipment is sold or transferred to any other entity in the U.S., that entity would have to request its own relief under 49 U.S.C. 20306.

E. Incorporation by Reference

FRA is incorporating by reference six Japanese Industrial Standards (JIS) and three ASTM International (ASTM) standards. As required by 1 CFR 51.5, FRA has summarized the standards it is incorporating by reference and has shown the reasonable availability of those standards here. The Japanese Industrial Standards are reasonably available to all interested parties online at *www.jsa.or.jp* (Japanese site), or *www.jsa.or.jp/en* (English site). In addition, the ASTM standards are reasonably available to all interested parties online at *www.astm.org*.

In § 299.13(d)(4) and (5), FRA incorporates by reference three versions of JIS E 1101, ''Flat bottom railway rails and special rails for switches and crossings of non-treated steel.'' JIS E 1101:2001 addresses the manufacturing of the steel rail. It specifies the quality and tests for flat bottom railway rails of non-treated steel, with a calculated mass of 30 kg/m or more, and special rails for those railway switches and crossings. JIS E 1101:2006 and JIS E 1101:2012 amend JIS E 1101:2001 by updating references to other cited standards (*e.g.,* updating the title to the cited reference), updating references to specific clauses within a cited standard, or by deleting a reference to a cited standard. By incorporating these standards by reference, TCRR will be required to use rail that is manufactured to the same specifications as the rail used on the Tokaido Shinkansen system, which will help ensure that the rail side of the wheel-rail interface remains identical to that used on the service-proven high-speed lines of JRC.

Under § 299.403(b), FRA incorporates by reference two versions of JIS E 7105 ''Rolling Stock—Test methods of static load for body structures.'' JIS E 7105:2006 addresses test methods for trainset carbodies. It specifies the test methods of static load for confirming strength, rigidity, and the like of body structures for passenger stock, such as electric railcars, internal combustion railcars, and passenger cars, principally. JIS E 7105:2011 amends JIS E 7105:2006 by updating references to other cited standards (*e.g.,* updating the title to the cited reference), updating references to specific clauses within a cited standard, or by updating specifications from the 2006 version. By incorporating these standards by reference, FRA will maintain the same strength and rigidity of TCRR's trainset carbody structure. This will help preserve the occupied volume from premature degradation due to typical in-service loads and vibration.

Under § 299.409(g), FRA incorporates by reference JIS B 8265:2010 ''Construction of pressure vessels general principles.'' JIS B 8265:2010 addresses manufacturing of pressure vessels and specifies certain requirements for the construction and fixtures of pressure vessels with the design pressure of less than 30 MPa. By incorporating this standard by reference, FRA will ensure that the pressurized air reservoirs used in TCRR's trainset are designed and constructed to the same service-proven standard as used in the N700 trainsets currently operated on the Tokaido Shinkansen system.

Under § 299.423(e)(1) and (f)(3), FRA incorporates by reference ASTM D 4956–07$^{\varepsilon 1}$ ''Standard Specification for Retroreflective Sheeting for Traffic Control,'' approved March 15, 2007. ASTM D 4956–07$^{\varepsilon 1}$ covers flexible, nonexposed glass bead lens and microprismatic, retroreflective sheeting designed for use on traffic control signs, delineators, barricades, and other devices.

Under § 299.423(e)(1), FRA incorporates by reference ASTM E 810–03 ''Standard Test Method for Coefficient of Retroreflection of Retroreflective Sheeting Utilizing the Coplanar Geometry,'' approved February 10, 2003. Test method ASTM E 810–03 describes an instrument measurement of the retroreflective performance of retroreflective sheeting. Under § 299.423(e)(2), FRA incorporates by reference ASTM E 2073–07 ''Standard Test Method for Photopic Luminance of Photoluminescent (Phosphorescent) Markings,'' approved July 1, 2007. FRA also incorporates by reference Section 5.2 of ASTM E 2073–07 under § 299.423(e)(2) and § 299.423(e)(2)(ii). Test method ASTM E 2073–07 covers a procedure for determining the photopic luminance of photoluminescent (phosphorescent) markings. It does not cover scotopic or mesopic measurements. Incorporation

[70] *See* FRA Docket No. FRA–2019–0068, Document ID: FRA–2019–0068–0039.

of the three ASTM standards by reference is to ensure that the materials used for interior and exterior emergency markings can provide adequate photoluminescence or retroreflectivity. As the markings utilizing these materials will be relied on during emergencies (either for passenger egress or first responder access), it is important that the marking can be easily identified and followed should the emergency occur during hours of limited visibility, with possible degradation or complete loss of interior lighting. The standards either provide performance specifications for design and manufacture, or provide the testing methods.

VI. FRA's Record of Decision

This final rule constitutes the Record of Decision (ROD) for FRA's publication of an RPA, pursuant to NEPA and the NEPA implementing regulations from the Council on Environmental Quality (CEQ).[71] In making its decision to proceed with the RPA, FRA considered the information and analysis included in the Draft and Final EIS, public and agency comments submitted on the Draft and Final EIS for Dallas to Houston High-Speed Rail, technical supporting information, and public and agency comments submitted on the NPRM.

As required by CEQ regulations,[72] in addition to the Agency's decision, this final rule and ROD sets forth a summary of the alternatives considered by FRA in reaching its decision, including the environmentally preferable alternative, and identifies the mitigation measures to be implemented.

A. Summary of Alternatives Considered

TCRR identified its intent to construct and operate a high-speed rail system between Dallas and Houston in its rulemaking petition. Therefore, while FRA's decision is whether to publish an RPA (or take other regulatory action necessary for the implementation of the Tokaido Shinkansen technology within the U.S.), FRA also identified and evaluated six end-to-end Build Alternatives in the Draft and Final EIS to understand the potential impacts that could result if FRA publishes the RPA and TCRR advances the proposed Dallas to Houston project.

To identify the six end-to-end Build Alternatives evaluated in the Draft and Final EIS, FRA completed a two-step alternatives development process. Section 2.4, Alternatives Considered, Development and Evaluation of Proposed Corridors of the Final EIS, summarizes the process FRA undertook to identify four corridor alternatives. The *Dallas to Houston High-Speed Rail Project, Corridor Alternatives Analysis Technical Report,* which describes the corridor analysis in detail, is available on FRA's website.[73]

Section 2.5, Alternatives Considered, Development and Evaluation of Initial Alignment, Station and TMF Alternatives of the Final EIS, details the process that FRA undertook to identify the six build alternatives that were evaluated in the Draft and Final EIS. The complete analysis of alignment alternatives is described in the *Dallas to Houston High Speed Rail Project, Alignment Alternatives Analysis Report,* also available on FRA's website.

1. No Build Alternative

As required by NEPA, the Final EIS included the No Build Alternative, also known as the alternative of no action, in its analysis as the baseline for comparison with Build Alternatives A through F and the three Houston Terminal Station Options. Under the No Build Alternative, FRA would not publish an RPA or take other regulatory action necessary for the implementation of the Tokaido Shinkansen technology within the U.S.; therefore, TCRR would not construct nor be able to operate the HSR system and associated facilities. Travel between Dallas and Houston would continue via existing highway (IH–45) and airport (Dallas Fort Worth International Airport [DFW], Dallas Love Field Airport [DAL], George Bush Intercontinental Airport [IAH] and William P. Hobby Airport [HOU]) infrastructure. *See* Section 2.61, Alternatives Considered, No Build Alternative of the Final EIS for a full description of the No Build Alternative.

2. Build Alternatives

The two-step alternatives development process resulted in the six end-to-end Build Alternatives, A through F, considered in the Draft and Final EIS. For analytical purposes, each alternative was divided into segments, as depicted on Figure 2–28 of the Final EIS.[74] Table 1 identifies the segments that create each Build Alternative. In addition to the track alignments, the limits of disturbance evaluated for each Build Alternative contains the infrastructure necessary to support HSR operations including stations, TMFs, MOW Facilities, signaling and communications infrastructure, Traction Power Substations (TPSS), sectioning posts, and sub-sectioning posts. *See* Section 2.6.2, Alternatives Considered, Build Alternatives of the Final EIS for complete descriptions of the alternatives and associated infrastructure.

The Final EIS analyzed the three stations proposed by TCRR, the Dallas Terminal Station, Brazos Valley Intermediate Station in Grimes County, and the Houston Terminal Station (which included three station location options in Houston). Stations and platforms would be designed to accommodate planned future operations. Two TMFs would be located near the terminal stations to serve as cleaning and maintenance facilities for the HSR trainsets. Each would occupy approximately 100 acres and include sidings for trainset storage, trainset car washes and other facilities. Seven MOW facilities would be located every 15 to 46 miles along the HSR ROW. Each MOW facility would be approximately 35 acres and have sidings for MOW equipment and sweeper vehicles. Signaling and communications infrastructure would typically be between 0.1 and 0.3 acre and spaced no more than 25 miles apart along the alignment. Radio towers approximately 50 feet tall would be spaced at approximately 6-mile intervals. Approximately 14 TPSSs, including 2 at the TMFs, would be spaced between 10 and 25 miles apart, generally adjacent to or within 1 mile of existing 138 kV transmission line. The TPSSs would have a footprint of approximately 6 acres with a substation building of approximately 2,200 square feet. An anticipated 11 sectioning posts and nine sub-sectioning posts would be placed between the TPSSs. Each would have a footprint of approximately one half to one acre each, with a small electrical building (approximately 1,600 square feet).

TABLE 1—BUILD ALTERNATIVES A THROUGH F

Build alternative	Segment
Alternative A	1, 2A, 3A, 4, 5.
Alternative B	1, 2A, 3B, 4, 5.
Alternative C	1, 2A, 3C, 5.
Alternative D	1, 2B, 3A, 4, 5.
Alternative E	1, 2B, 3B, 4, 5.
Alternative F	1, 2B, 3C, 5.

[71] 40 CFR 1500–1508.

[72] 40 CFR 1505.2.

[73] FRA. *Dallas to Houston High-Speed Rail—Passenger Service from Houston to Dallashttps://railroads.dot.gov/environmental-reviews/dallas-houston-high-speed-rail/dallas-houston-high-speed-rail-passenger.*

[74] FRA. *Dallas to Houston High-Speed Rail—Passenger Service from Houston to Dallas https://railroads.dot.gov/environmental-reviews/dallas-houston-high-speed-rail/dallas-houston-high-speed-rail-passenger,* Final Environmental Impact Statement.

Segment 1 is located in Dallas County and is common to all Build Alternatives. The segment is approximately 18-miles and includes the Dallas Terminal Station, Dallas TMF and a TPSS. Segment 2A, located in Ellis County beginning about 1.5 miles south of the Ellis County Line, is approximately 23 miles in length. Segment 2A includes one MOW facility and one TPSS. Segment 2B is also located in Ellis County and is approximately 23 miles in length. Segment 2B includes one MOW facility and one TPSS. Segment 3A is located in Ellis and Navarro counties. It is approximately 30 miles in length and includes one siding-off track and two TPSSs. Segment 3B is also located in Ellis and Navarro counties and is approximately 31 miles in length. Segment 3B includes one siding off track and one TPSS. Segment 3C, approximately 113 miles long, is located in Navarro, Freestone, Leon, Madison and Grimes counties. Segment 3C includes two MOW facilities, one siding off track and six TPSSs. Segment 4 is located in Freestone, Limestone, Leon, Madison and Grimes counties. It is approximately 80 miles in length and includes two MOW facilities, two siding off tracks and four TPSSs. Segment 5, at approximately 84 miles, is common to all Build Alternatives. It is located in Grimes, Waller and Harris counties. Segment 5 includes the Brazos Valley Intermediate Station, one TMF, two MOW facilities, one siding off track and four TPSSs.

In addition, as detailed in Section 2.5.2.3, Alternatives Considered, Houston Terminal Station Options of the Final EIS, three terminal station options, including the Industrial Site, Northwest Mall and Northwest Transit Center were considered for the Houston Terminal Station located in northwest Houston within the vicinity of US 290, IH–10 and IH–610 north of Post Oak Road, west of IH–610 and just north of Hempstead Road.

B. Environmentally Preferable Alternative

The environmentally preferable alternative is the alternative that is least damaging to the environment or that best protects, preserves, and enhances historic, cultural, and natural resources.[75] After considering the comparative analysis of the potential impacts of the No Build Alternative, Build Alternatives A–F, and the three Houston Terminal Station options presented in the Final EIS, FRA finds that Build Alternative A (comprised of Segments 1, 2A, 3A, 4, and 5) and the Houston Northwest Mall Terminal Station Option, which were identified as the Preferred Alternative in the Final EIS, are the environmentally preferable alternatives that provide the best balance to transportation goals while minimizing physical impacts to the built and natural environment.[76]

1. Environmentally Preferable Build Alternative

For many resource areas, there are no distinguishable differences in impacts among Build Alternatives A–F.[77] When the environmental impacts of Build Alternatives A–F are compared, Build Alternative A would have the overall fewest permanent impacts to the socioeconomic, natural, physical, and cultural resources environment, including generally fewer permanent acquisitions and displacements, and impacts to transportation, floodplains, and waters of the U.S.

In addition, Segment 2B, a component of Build Alternatives D, E, and F, would cross U.S. Army Corps of Engineers (USACE) fee land. Coordination with USACE identified that the USACE National Non-Recreation Outgrant Policy would prevent USACE from carrying forward Segment 2B in the USACE evaluation criteria, as there is a viable alternative not on federal property. Environmental resources that differentiate Build Alternatives A, B, and C are presented in Table 2.

TABLE 2—COMPARISON OF BUILD ALTERNATIVES A, B AND C[78]

Evaluation criteria	Measure	Alt A	Alt B	Alt C
Water Quality (Section 3.3)				
Impaired Waterbodies—303(d) List	Feet	344.7	517.4	496
Impaired Waterbodies Total	Feet	830.0	1,002.7	981.3
Groundwater Wells	Count	9	13	7
Noise and Vibration (Section 3.4)				
Severe Noise Impact:				
Residential	Count	10	12	10
Moderate Noise Impact:				
Residential	Count	280	290	275
Hazardous Materials and Solid Waste (Section 3.5)				
Low-Risk Hazardous Material Sites	Count	297	298	326

[75] CEQ's Forty Most Asked Questions Concerning CEQ's National Environmental Policy Act Regulations, 46 FR 18026 (Mar. 23, 1981, as amended 1986).

[76] *See* Section 2.7, Alternatives Considered, Preferred Alternative of the Final EIS for a more detailed comparison of the potential environmental impacts that differentiate the Build Alternatives and Houston Terminal Station Options.

[77] Including air quality, elderly and handicapped, socioeconomic, electromagnetic field, environmental justice, vibration, aesthetics and visual, and greenhouse gas emissions.

[78] Specific impacts are not included in this comparison table if they are equal across Build Alternatives A, B and C. Section references within this table are to sections of the Final EIS.

[79] Threatened and Endangered Species acreages include habitat for species with mapped habitat that may be impacted, including the Houston toad, large-fruited sand verbena, and Navasota ladies'-tresses. Threatened and endangered species in the Study Area that may be impacted, but that do not have mapped habitat, include the interior least tern and the whooping crane.

[80] Road modifications reflect the number of reroutes, road adjustments, or road over rail constructions that would occur. Some roads are affected by multiple modifications (such as IH–45). Modifications do not reflect total number of roads, but total number of road construction sites.

[81] Shared access roads are included in roadway modification lengths. Shared access roads will be developed to provide for maintenance, emergency response access, and private property access with a corresponding reduction in the number of new public roads to decrease burden on roadway authorities. Shared access roads would be constructed and maintained by TCRR.

[82] Anxiety Aerodrome would be directly impacted by Segment 3B, which is part of Alternatives B and E. Indirect impacts to special status farmland in Section 3.13, Land Use of the Final EIS are defined as a 25-foot setback added to the LOD to account for indirect loss of productive farmland to accommodate the use of farm and ranch equipment or impacts such as induced wind and changes in irrigation.

TABLE 2—COMPARISON OF BUILD ALTERNATIVES A, B AND C [78]—Continued

Evaluation criteria	Measure	Alt A	Alt B	Alt C
Moderate-Risk Hazardous Material Sites	Count	155	155	165
Natural Ecological Systems and Protected Species (Section 3.6) [79]				
Protected Species Modeled Habitat—Temporary	Acres	328	328	325
Protected Species Modeled Habitat—Permanent	Acres	1,058	1,058	1,452
Waters of the U.S. (Section 3.7)				
Stream Crossings—Temporary	Feet	83,459	83,791	90,942
Stream Crossings—Permanent	Feet	38,898	45,631	35,096
Wetlands—Temporary	Acres	59.5	59.0	44.3
Wetlands—Permanent	Acres	50.0	47.4	63.4
Waterbodies—Temporary	Acres	33.5	36.3	30.4
Waterbodies—Permanent	Acres	27.6	27.2	21.1
Floodplains (Section 3.8)				
Impacts to 100-Year Floodplain	Acres	616	557	642
Impacts to 500-Year Floodplain	Acres	132	132	133
Permanent Impacts to 100-Year and 500-Year Floodplains	Acres	529	479	579
Temporary Impacts to 100-Year and 500-Year Floodplains	Acres	219	210	196
Total Acres of Impacted Floodplain	Acres	748	689	775
Total Number of Bridge/Viaduct Crossings of FEMA Zone AE	Count	63	63	71
Total Number of Bridge/Viaduct Crossings of FEMA Zone A	Count	126	142	137
Utilities and Energy (Section 3.9)				
New Electric TPSS Connections	Count	13	12	13
Electric Utility Pole Adjustments	Count	85	85	74
Total Electric Connections and Adjustment	Count	98	97	87
Abandoned Oil and Gas Wells	Count	37	37	22
Aesthetics and Scenic Resources (Section 3.10)				
Total Number of Adverse Visual Resource Impacts	Count	11	11	10
Transportation (Section 3.11)				
Road Modifications [80] (*Public and Private*)	Count	138	150	102
Road Modifications [81] (*Public only*)	Count	59	66	79
Length added to Public Roads (miles)	Miles	16.8	21.4	46.9
Length removed from Public Roads (miles)	Miles	5.1	5.0	27.2
Impacts to airports [82]	Count	0	1	0
Land Use (Section 3.13)				
LU Conversion—Temporary	Acres	2,553.4	2,532.9	2,393.2
LU Conversion—Permanent	Acres	6,619.8	6,814.0	7,295.6
Special Status Farmland—Temporary	Acres	1,710.8	1,690.4	1,459.8
Special Status Farmland—Permanent	Acres	3,534.5	3,764.3	3,573.4
Special Status Farmland—Indirect [5]	Acres	847.5	888.2	697.3
Displacement—Commercial (primary)	Count	42	42	65
Displacement—Residence (primary)	Count	235	255	239
Displacement—Community Facilities (primary)	Count	2	2	3
Estimated Permanent Parcel Acquisitions	Count	1,731	1,814	1,789
Estimated Temporary Parcel Acquisitions	Count	272	277	259
Estimated Structure Acquisitions—Agriculture	Count	196	223	196
Estimated Structure Acquisitions—Commercial	Count	12	12	18
Estimated Structure Acquisitions—Cultural/Civic Resources	Count	2	2	1
Estimated Structure Acquisitions—Oil and Gas	Count	12	12	17
Estimated Structure Acquisitions—Residence	Count	49	50	51
Estimated Structure Acquisitions—Transportation and Utilities	Count	0	0	1
Safety and Security (Section 3.16)				
Permanent Road Modifications resulting in 1 minute or more in additional through travel time.	Count	12	13	9
Total fire and EMS service areas bisected by construction	Count	56	57	51
Fire and EMS providers with high potential for construction effects	Count	3	4	5
Fire and EMS providers with localized potential for construction effects	Count	8	7	6

TABLE 2—COMPARISON OF BUILD ALTERNATIVES A, B AND C [78]—Continued

Evaluation criteria	Measure	Alt A	Alt B	Alt C
Recreational Facilities (Section 3.17)				
Parks	Count	0	0	1
Environmental Justice (Section 3.18)				
Number of Minority and/or Low-Income block groups intersected by the Study Area.	Count	80	80	81
Number of all block groups intersected by the Study Area	Count	118	118	119
Cultural Resources (Section 3.19)				
Adverse Impacts to Historic Properties	Count	14	14	13
Soils and Geology (Section 3.20)				
LOD Area	Acres	9,173.4	9,347.1	9,689.0
Shrink-Swell Potential—Low	Acres	2,593.6	2,585.8	2,848.3
Shrink-Swell Potential—Moderate	Acres	1,458.4	1,465.1	1,485.0
Shrink-Swell Potential—High	Acres	2,284.0	2,477.1	2,471.2
Shrink-Swell Potential—Very High	Acres	2,727.9	2,697.5	2,781.8
Erosion Potential—Low	Acres	1,611.6	1,591.3	1,914.1
Erosion Potential—Moderate	Acres	4,511.2	4,619.9	4,786.6
Erosion Potential—High	Acres	2,963.5	3,036.8	2,907.9
Corrosion Potential—Low	Acres	55.3	71.8	81.4
Corrosion Potential—Moderate	Acres	2,204.8	2,182.0	2,761.1
Corrosion Potential—High	Acres	6,824.5	6,992.5	6,764.5
Prime Farmland Soils	Acres	5,245.3	5,454.7	5,033.2

Source: AECOM, 2019.

2. Environmentally Preferable Houston Station Option

Like the Build Alternatives, for most resource areas, there are no distinguishable differences among the Houston Terminal Station Options. When the environmental impacts of each station option are compared, the Houston Industrial Site Terminal Station Option would have fewer permanent impacts to the socioeconomic, natural, physical, and cultural resources environment. However, the Houston Industrial Site Terminal Station Option would require the use of a resource protected by Section 4(f) of the Department Transportation Act,[83] which the other Houston Terminal Station Options would not.[84] Because of the special consideration given to resources protected under Section 4(f), FRA finds that the Houston Industrial Site Terminal Station Option is not environmentally preferable.

When the environmental impacts of Houston Northwest Mall Terminal Station Option and Northwest Transit Center Terminal Station Option are compared, the Houston Northwest Mall Terminal Station Option would have fewer permanent impacts to the socioeconomic, natural, physical, and cultural resources environment, as shown in Table 3.

TABLE 3—COMPARISON OF HOUSTON NORTHWEST TRANSIT CENTER TERMINAL STATION OPTIONS AND HOUSTON NORTHWEST MALL TERMINAL STATION OPTION [85]

Evaluation criteria	Measure	Northwest Transit Center	Northwest Mall
Hazardous Materials and Solid Waste (Section 3.5)			
Low-Risk Hazardous Material Sites	Count	6	0
Moderate-Risk Hazardous Material Sites	Count	8	3
High-Risk Hazardous Material Sites	Count	0	0
Waters of the U.S. (Section 3.7)			
Wetlands—Temporary	Acres	1.6	0.0
Waterbodies—Temporary	Acres	0.10	0.0
Transportation (Section 3.11)			
Intersections at LOS E or F	Count	22	24

[83] 49 U.S.C. 303.

[84] *See* Chapter 7.0, Section 4(f) and Section 6(f) Evaluation, of the Final EIS.

[85] Section references within this table are to sections of the Final EIS.

TABLE 3—COMPARISON OF HOUSTON NORTHWEST TRANSIT CENTER TERMINAL STATION OPTIONS AND HOUSTON NORTHWEST MALL TERMINAL STATION OPTION [85]—Continued

Evaluation criteria	Measure	Northwest Transit Center	Northwest Mall
Land Use (Section 3.13)			
LU Conversion—Temporary	Acres	11.8	27.4
LU Conversion—Permanent	Acres	88.7	75.8
Displacement—Commercial (primary)	Count	15	22
Displacement—Community Facility (primary)	Count	1	0
Estimated Permanent Parcel Acquisitions	Count	43	40
Estimated Temporary Parcel Acquisitions	Count	0	1
Estimated Structure Acquisitions—Commercial	Count	0	1
Socioeconomics and Community Facilities (Section 3.14)			
Community Facility	Count	1	0
Cultural Resources (Section 3.19)			
Adverse Impacts to Historic Properties	Count	1	0

Source: AECOM 2019.

C. Mitigation Commitments

FRA identified compliance and mitigation measures based upon identification of best practices and technical consideration of the likely success in implementation, Agency consultations, comments on the Draft and Final EIS, regulatory requirements, and input from TCRR. These mitigation commitments would avoid, minimize, mitigate, or compensate for the potential adverse impacts related to the construction and/or operation of TCRR's proposed Dallas to Houston project.

TCRR has agreed to implement the compliance and mitigation measures identified in the Dallas to Houston High-Speed Rail Mitigation Commitments, which is located on FRA's website.[86] The compliance and mitigation measures were also included in the Final EIS. In addition, TCRR is responsible for adhering to applicable Federal, State, and local laws, ordinances and requirements. TCRR has agreed to maintain an environmental compliance system to serve as a database of compliance and mitigation commitments and provide accountability and transparency to environmental regulatory agencies. TCRR will also prepare a quarterly report that summarizes the status of implementing compliance and mitigation measures by geographic area, mitigation activities completed, significant upcoming activities, and any corrective actions taken for any instances of non-compliance. TCRR will make the quarterly report available to the public by posting it on the TCRR website.

VII. Regulatory Impact and Notices

A. Executive Orders 12866 and 13771, and DOT Regulatory Policies and Procedures

The TCRR high-speed system is modeled on JRC's Tokaido Shinkansen HSR system, which does not meet many of the requirements under the Passenger Equipment Safety Standards (Tier III) final rule.[87] TCRR desires to maintain the safety record of the Tokaido Shinkansen HSR system, so it is imperative that the systems approach to safety and the philosophy of the JRC system be implemented in the United States. As such, TCRR is requesting, through this rulemaking, that it comply with regulations that are different, and in some instances, more stringent than the Tier III requirements.

FRA has a regulatory program that addresses equipment, track, operating practices, and human factors in the existing, conventional railroad environment. However, significant operational and equipment differences exist between the system contemplated by TCRR and other passenger operations in the United States. In many of the railroad safety disciplines, FRA's existing regulations do not address the operational characteristics of TCRR's system. Therefore, to ensure that this new system will operate safely, minimum Federal safety standards must be in place when TCRR commences operations.

Through this final rule, FRA will regulate the TCRR system as a standalone system. FRA stated in the Tier III final rule that a standalone system would have to combine all aspects of railroad safety (such as operating practices, signal and train control, and track) that must be applied to the individual system. Such an approach covers more than passenger equipment and would likely necessitate particular ROW intrusion protection and other safety requirements not adequately addressed in FRA's regulations. Without this final rule, TCRR would not be allowed to implement its system as it does not meet many of the requirements of FRA's existing regulations of general applicability. Accordingly, by enabling private activity that would otherwise be prohibited, this final rule is an E.O. 13771 deregulatory action.

E.O. 12866 requires agencies to account for additional regulatory burdens that a particular regulatory action would have on a regulated entity. In the rulemaking context, under E.O. 12866, two similar forms of regulatory action (*e.g.,* a rulemaking versus a waiver process) could have substantially different burdens on a regulated entity. For this reason, the methodology used to evaluate burdens of a particular regulatory action on a regulated entity under E.O. 12866 will differ from the methodology used under NEPA to assess the potential environmental impacts that may result from the regulatory action. For more information regarding the NEPA process, please see section VII. F. National Environmental

[86] FRA. *Dallas to Houston High-Speed Rail—Passenger Service from Houston to Dallas https://railroads.dot.gov/environmental-reviews/dallas-houston-high-speed-rail/dallas-houston-high-speed-rail-passenger,* Record of Decision Attachments, Mitigation Commitments.

[87] 83 FR 59182 (Nov. 21, 2018).

Policy Act, or the Final EIS which has been included in the rulemaking docket (Docket No. FRA–2019–0068, Final Environmental Impact Statement).

This final rule though, as an RPA, was not subject to review under E.O. 12866, as that applies only to rules of general applicability. Accordingly, FRA concluded that because this final rule generally includes only voluntary actions or alternative actions that would be voluntary, the final rule does not impart additional burdens on regulated entities, specifically TCRR. Even though not subject to E.O. 12866 review, FRA has provided a qualitative discussion on the costs, benefits, and alternatives considered, which can be found under section V. A. Executive Orders 12866 and 13771, and DOT Regulatory Policies and Procedures of the NPRM.[88] Responses to comments on FRA's regulatory evaluation are under section IV. M. Regulatory Evaluation of this final rule.

B. Regulatory Flexibility Act and Executive Order 13272; Regulatory Flexibility Assessment

The Regulatory Flexibility Act of 1980[89] and E.O. 13272[90] require agency review of proposed and final rules to assess their impacts on small entities. An agency must prepare a Final Regulatory Flexibility Analysis unless it determines and certifies that a rule, if promulgated, would not have a significant economic impact on a substantial number of small entities.

''Small entity'' is defined in 5 U.S.C. 601 as a small business concern that is independently owned and operated, and is not dominant in its field of operation. The SBA has authority to regulate issues related to small businesses, and stipulates in its size standards that a ''small entity'' in the railroad industry is a for profit ''line-haul railroad'' that has fewer than 1,500 employees, a ''short line railroad'' with fewer than 500 employees, or a ''commuter rail system'' with annual receipts of less than seven million dollars.[91] In addition, section 601(5) of the Small Business Act defines ''small entities'' as governments of cities, counties, towns, townships, villages, school districts, or special districts with populations less than 50,000 that operate railroads. Federal agencies may adopt their own size standards for small entities in consultation with SBA and in conjunction with public comment. Thus, in consultation with SBA, FRA has published a final statement of agency policy that formally establishes ''small entities'' or ''small businesses'' as railroads, contractors, and shippers that meet the revenue requirements of a Class III railroad—$20 million or less in inflation-adjusted annual revenue—and commuter railroads or small government jurisdictions that serve populations of 50,000 or less.

As this final rule applies only to one railroad, TCRR, which provides intercity rail passenger service between Dallas and Houston, Texas, which have populations larger than 50,000 people, TCRR is not considered a small entity.

FRA invited all interested parties to submit comments, data, and information demonstrating the potential economic impact on any small entity that would result from the adoption of the final rule. During the comment period, FRA did not receive any comments from the public or stakeholders regarding the impact that the final rule would have on small entities.

Accordingly, the Administrator of FRA hereby certifies that this final rule will not have a significant economic impact on a substantial number of small entities.

C. Paperwork Reduction Act

In accordance with the Paperwork Reduction Act of 1995,[92] and its implementing regulations,[93] when information collection requirements pertain to nine or fewer entities, Office of Management and Budget (OMB) approval of the collection requirements is not required. This regulation pertains to one railroad, and therefore, OMB approval of the paperwork collection requirements in this final rule is not required.

D. Federalism Implications

E.O. 13132, ''Federalism,''[94] requires FRA to develop an accountable process to ensure ''meaningful and timely input by State and local officials in the development of regulatory policies that have federalism implications.'' ''Policies that have federalism implications'' are defined in the E.O. to include regulations that have ''substantial direct effects on the States, on the relationship between the national government and the States, or on the distribution of power and responsibilities among the various levels of government.'' Under E.O. 13132, an agency may not issue a regulation with federalism implications that imposes substantial direct compliance costs and that is not required by statute, unless the Federal Government provides the funds necessary to pay the direct compliance costs incurred by State and local governments, or the agency consults with State and local government officials early in the process of developing the regulation. Where a regulation has federalism implications and preempts State law, the agency seeks to consult with State and local officials in the process of developing the regulation.

This final rule has been analyzed under the principles and criteria contained in E.O. 13132. This final rule will not have a substantial effect on the States or their political subdivisions, and it will not affect the relationships between the Federal Government and the States or their political subdivisions, or the distribution of power and responsibilities among the various levels of government. In addition, FRA has determined that this regulatory action will not impose substantial direct compliance costs on the States or their political subdivisions. Therefore, the consultation and funding requirements of E.O. 13132 do not apply.

However, the final rule arising from this rulemaking could have preemptive effect by operation of law under certain provisions of the Federal railroad safety statutes, specifically the former Federal Railroad Safety Act of 1970,[95] and the former Locomotive Boiler Inspection Act (LIA).[96] Section 20106 provides that States may not adopt or continue in effect any law, regulation, or order related to railroad safety or security that covers the subject matter of a regulation prescribed or order issued by the Secretary of Transportation (with respect to railroad safety matters) or the Secretary of Homeland Security (with respect to railroad security matters), except when the State law, regulation, or order qualifies under the ''essentially local safety or security hazard'' exception to section 20106. Moreover, the former LIA has been interpreted by the Supreme Court as preempting the field concerning locomotive safety.[97]

E. International Trade Impact Assessment

The Trade Agreements Act of 1979 prohibits Federal agencies from engaging in any standards or related activities that create unnecessary obstacles to the foreign commerce of the

[88] 85 FR 14036, 14047.

[89] 5 U.S.C. 601 *et seq.*

[90] 67 FR 53461, Aug. 16, 2002.

[91] ''Size Eligibility Provisions and Standards,'' 13 CFR part 121, subpart A.

[92] 44 U.S.C. 3501–3520.

[93] 5 CFR part 1320.

[94] 64 FR 43255 (Aug. 10, 1999).

[95] Repealed and recodified at 49 U.S.C. 20106.

[96] 45 U.S.C. 22–34, repealed and recodified at 49 U.S.C. 20701–20703.

[97] *See Napier* v. *Atlantic Coast Line R.R.,* 272 U.S. 605 (1926).

United States. Legitimate domestic objectives, such as safety, are not considered unnecessary obstacles.[98] The statute also requires consideration of international standards and, where appropriate, that they be the basis for U.S. standards.

FRA has assessed the potential effect of this final rule on foreign commerce and believes that its requirements are consistent with the Trade Agreements Act. The requirements are safety standards, which, as noted, are not considered unnecessary obstacles to trade.

F. National Environmental Policy Act

FRA is the lead agency for the preparation of the EIS in compliance with CEQ's NEPA-implementing regulations,[99] FRA's *Procedures for Considering Environmental Impacts,*[100] and associated environmental laws. Cooperating agencies in the EIS include the United States Environmental Protection Agency (EPA), the Federal Highway Administration, the Federal Transit Administration, the STB, USACE and the United States Fish and Wildlife Service (USFWS). The Texas Department of Transportation provided technical assistance to FRA in the preparation of the EIS.

FRA published a Notice of Intent (NOI) to prepare an EIS in the **Federal Register** on June 25, 2014.[101] The NOI announced FRA's intent to prepare an EIS and the beginning of the scoping period, provided a brief background on TCRR's proposal, and identified the preliminary contents of the EIS, the required approvals by the Federal Government, and procedures expected for coordination and public involvement based on NEPA requirements.

After publication of the NOI, FRA conducted extended scoping through January 9, 2015. Notification of the extended scoping period included an email to the mailing list, letters to elected officials, FRA media advisory and a notice on FRA's website. FRA also conducted a series of 12 public scoping meetings in October and December 2014. A total of 1,943 individuals, including 118 elected officials, attended 12 public scoping meetings. Additional details on these public scoping meetings may be found on FRA's website.[102]

After scoping, FRA identified the Build Alternatives described in section VI. A. Summary of Alternatives Considered of this final rule, and evaluated the potential impacts of those alternatives in the Draft EIS. On December 22, 2017, EPA published a Notice of Availability (NOA) for the Draft EIS in the **Federal Register**.[103] FRA circulated the Draft EIS to affected local jurisdictions, State and Federal agencies, tribes, community organizations and other interested groups, interested individuals and the public. The Draft EIS was available for public review at 24 locations and posted on the FRA website.[104] FRA published notices that the Draft EIS was available for review in 27 newspapers throughout the area of the proposed Dallas to Houston project and FRA also mailed notices to 2,722 individuals, landowners and organizations on the mailing list.

As required by NEPA, the EIS identified the purpose and need to which the agency is responding.[105] FRA's purpose and need was developed in response to the proposal in the petition submitted by TCRR, which is also the basis for FRA's regulatory action. Accordingly, in the EIS, FRA identified that ''the purpose of the privately proposed Project is to provide the public with reliable and safe HSR transportation between Dallas and Houston.'' The need is described in detail in Section 1.2.2, Introduction, Need of the Final EIS. The Draft EIS analyzed six end-to-end Build Alternatives (Alternatives A through F) and three Houston Terminal Station Options: The Houston Industrial Site Station Terminal, the Houston Northwest Mall Terminal Station, and the Houston Northwest Transit Center Terminal Station, as well as the No Build Alternative. The Build Alternatives included a terminal station in Dallas and an intermediate station in Grimes County. As required by CEQ regulations,[106] the Draft EIS identified Build Alternative A as the Preferred Alternative. The Draft EIS did not identify a preferred Houston Terminal Station option.

The public comment period for the Draft EIS ran from December 22, 2017 through March 9, 2018. FRA conducted 11 public hearings to accept agency and public comments on the Draft EIS during the comment period. FRA received a total of 25,309 comments from approximately 6,000 individuals. A total of 2,971 individuals, including 84 elected officials, attended the 11 public hearings. *See* Section 9.6, Public and Agency Involvement, Draft EIS of the Final EIS for more information on the public comment period and hearing format.

FRA reviewed and assessed all comments (written and oral) received during the public comment period on the Draft EIS through the preparation of the Final EIS. These comments helped to inform FRA's development of the Final EIS. FRA responded to all public comments in the Final EIS.

The Final EIS identifies, evaluates, and documents the potential environmental and socioeconomic effects of FRA's proposed action. This includes implementing TCRR's proposed HSR service between Dallas and Houston as described in TCRR's petition, which is the only future operating location TCRR has identified to FRA. As required by CEQ regulations,[107] the Final EIS identified Build Alternative A (comprised of Segments 1, 2A, 3A, 4, and 5) and the Houston Northwest Mall Terminal Station Option as the Preferred Alternative.

FRA's rulemaking would enable the safe operation of TCRR's HSR system in locations other than between Dallas and Houston, even though FRA is aware of no proposal to operate such service. Thus, the Final EIS also evaluates and documents the reasonably foreseeable potential beneficial and adverse environmental impacts of implementing TCRR's HSR system in any location within the United States.[108] However, as TCRR has not proposed to operate in any other location, discussion of location-specific impacts, other than the service proposed in TCRR's rulemaking petition and conceptual engineering, would be speculative.

FRA signed the Final EIS on May 15, 2020, and EPA published an NOA for the EIS in the **Federal Register** on May 29, 2020.[109] FRA also circulated the Final EIS to affected local jurisdictions, State and Federal agencies, tribes, community organizations and other interested groups, interested individuals and the public. The Final EIS was made available for public review at 24

[98] Public Law 96–39, 19 U.S.C. 2501 *et seq.*

[99] 40 CFR 1500–1508.

[100] 64 FR 28545 (May 26, 1999), as updated in 78 FR 2713 (Jan. 14, 2013).

[101] 79 FR 36123 (Jun. 24, 2014).

[102] FRA. *Dallas to Houston High-Speed Rail—Passenger Service from Houston to Dallas https://railroads.dot.gov/environmental-reviews/dallas-houston-high-speed-rail/dallas-houston-high-speed-rail-passenger,* Dallas to Houston High-Speed Rail Scoping Report.

[103] 82 FR 60723 (Dec. 22, 2017).

[104] FRA. *Dallas to Houston High-Speed Rail—Passenger Service from Houston to Dallas https://railroads.dot.gov/environmental-reviews/dallas-houston-high-speed-rail/dallas-houston-high-speed-rail-passenger,* Draft Environmental Impact Statement.

[105] 40 CFR 1502.13.

[106] 40 CFR 1502.14.

[107] 40 CFR 1502.14.

[108] Section 3.1.2, Impacts of the TCRR HSR System Independent of Location of the Final EIS.

[109] 85 FR 32390 (May 29, 2020).

locations and was posted on the FRA website.[110] FRA also provided 25 print copies and 200 electronic copies (via USB flash drive) of the Final EIS to the public, upon request. The NOA was published in 26 newspapers throughout the area of the proposed Dallas to Houston project and mailed notices to 5,018 individuals, landowners and organizations on the mailing list.

1. Summary of Comments on the Final EIS

FRA reviewed and analyzed comments received since the Final EIS was released on May 29, 2020. FRA received a total of 96 comment submissions from approximately 76 individuals, agencies, businesses, and/or organizations between May 29, 2020 and July 28, 2020. Submissions were categorized by comment topic, which resulted in some submissions being split into multiple comments, and in total FRA received 143 comments. In general, comments were regarding impacts to transportation, cultural resources, build alternatives, project viability, general project support or opposition, or the overall NEPA process. Comments received have raised no new substantive issues relevant to environmental concerns from those received during the public comment period of the Draft EIS (see Appendix H, Response to Draft EIS Comments of the Final EIS) or on topics not already addressed within the Final EIS. However, several comments raised issues that warrant clarification or correction here, specifically comments related to the capital cost of TCRR's proposed Dallas to Houston project, and safety concerns related to electrical arcing from the HSR system and proximity to natural gas pipelines.

Several commenters noted that capital costs publicly reported by TCRR in April 2020 ($30 billion) differ from the capital costs reported in the Final EIS ($16–19 billion). The capital costs estimate in the Final EIS (Section 3.14.5.2.3, Socioeconomics and Community Facilities, Economic Impacts) includes construction labor, materials, indirect costs, and approximately $2.6 billion for systems and rolling stock.

Additional information provided by TCRR clarified that the $30 billion capital costs reported by Texas Central Board Chairman Drayton McLane in an April 8, 2020, letter was based on the overall conservative project costs. This value included the direct costs to design, construct, and commission the rail system as portrayed in the Final EIS, but also other indirect costs excluded from the Final EIS analysis (*e.g.,* land acquisition, litigation, property taxes, insurance, financing costs, and increased costs of foreign supply). TCRR also reported that the $30 billion included contingency and increased escalation of costs.

FRA believes that the increased escalation costs could result in larger economic benefits than what was identified in the Final EIS. Therefore, the escalation values in the $16 billion and $19 billion ($2019) projections from the Final EIS represent a more conservative estimate of the potential beneficial impacts.

Comments regarding safety concerns related to electrical arcing from the HSR system and proximity to natural gas pipelines were similar to the comments FRA received on those topics in response to the NPRM. FRA notes that proximity to pipelines was addressed in the Final EIS (See Section 3.9, Utilities and Energy) and in the detailed discussion in response to comments in section IV. C. General Safety Oversight, of this final rule. As discussed in section IV. H. Electrical Arcing from the Overhead Catenary System, of this final rule, this occurrence is part of the normal operation of an electrical traction power system like the one proposed by TCRR, and by itself does not pose any particular safety risk. FRA does not believe there is a potential environmental impact or safety concern as a result of this phenomenon that requires assessment under NEPA.

Clarifications and/or updates to the Final EIS text, some of which were identified in comments submitted on the Final EIS, are included in the Final EIS Errata and Updated Information.[111]

2. Potential Environmental Impacts

The Final EIS assessed the potential beneficial and adverse environmental impacts of FRA's proposed rulemaking. The Final EIS considered impacts from TCRR's proposed project, the approximately 240-mile, for-profit, HSR system connecting Dallas and Houston based on JRC's Tokaido Shinkansen system technology, as described in Section 2.2, Alternatives Considered, Proposed HSR Infrastructure and Operations of the Final EIS and in the rulemaking petition submitted by TCRR. The HSR service between Dallas and Houston is the only proposed service or future operating location TCRR has identified to FRA and therefore FRA determined it was appropriate to evaluate the potential project-specific impacts of this proposed service. The potential impacts that would result from implementing the proposed project are identified and discussed in Chapter 3.0, Affected Environment and Environmental Consequences and Chapter 4, Indirect and Cumulative Impacts, of the Final EIS and are summarized below in Table 4.

TABLE 4—SUMMARY OF POTENTIAL DIRECT IMPACTS [112]

Evaluation criteria	Measure	Build alts. A–F	Houston Terminal Station options	Total
Air Quality (Final EIS Section 3.2)				
Air Quality Impacts	N/A	Net emissions benefit for permanent operations, temporary construction impacts.		
Water Quality (Final EIS Section 3.3)				
Impaired Waterbodies—303(d) List	Feet	344.7–517.4	0	344.7–517.4
Impaired Waterbodies with TMDLs	Feet	485.3	0	485.3
Impaired Waterbodies Total	Feet	830–1,002.7	0	830–1,002.7
Active Public Water System Wells	Count	1	0	1
Groundwater Wells	Count	7–13	0	7–13

[110] FRA. *Dallas to Houston High-Speed Rail—Passenger Service from Houston to Dallas https://railroads.dot.gov/environmental-reviews/dallas-houston-high-speed-rail/dallas-houston-high-speed-rail-passenger,* Final Environmental Impact Statement.

[111] FRA. *Dallas to Houston High-Speed Rail—Passenger Service from Houston to Dallas https://railroads.dot.gov/environmental-reviews/dallas-houston-high-speed-rail/dallas-houston-high-speed-rail-passenger,* Record of Decision Attachments, Final EIS Errata and Updated Information.

TABLE 4—SUMMARY OF POTENTIAL DIRECT IMPACTS [112]—Continued

Evaluation criteria	Measure	Build alts. A–F	Houston Terminal Station options	Total
Reservoir/Dam Crossings	Count	0	0	0
Noise and Vibration (Final EIS Section 3.4)				
Severe Noise Impact:				
Residential	Count	9–12	0	9–12
Institutional	Count	0	0	0
Moderate Noise Impact:				
Residential	Count	275–295	0	275–295
Institutional	Count	1	0	1
Vibration Impact:				
Residential	Count	0	0	0
Institutional	Count	0	0	0
Hazardous Materials and Solid Waste (Final EIS Section 3.5)				
Low-Risk Hazardous Material Sites	Count	297–326	0–6	297–332
Moderate-Risk Hazardous Material Sites	Count	155–165	3–8	158–173
High-Risk Hazardous Material Sites	Count	3–4	0–2	3–6
Natural Ecological Systems and Protected Species (Final EIS Section 3.6) [113]				
Protected Species Modeled Habitat—Temporary	Acres	325–328	0	325–328
Protected Species Modeled Habitat—Permanent	Acres	1,058–1,452	0	1,058–1,452
Waters of the U.S. (Final EIS Section 3.7)				
Stream Crossings—Temporary	Feet	83,459–90,942	0	83,459–90,942
Stream Crossings—Permanent	Feet	34,839–45,631	0	34,839–45,631
Wetlands—Temporary	Acres	44.3–61.1	0	44.3–61.1
Wetlands—Permanent	Acres	47.4–64.4	0–1.6	47.4–66.0
Waterbodies—Temporary	Acres	27.9–36.3	0–0.1	27.9–36.4
Waterbodies—Permanent	Acres	21.1–29.3	0	21.1–29.3
Floodplains (Final EIS Section 3.8)				
Impacts to 100-Year Floodplain	Acres	557–657	0	557–657.0
Impacts to 500-Year Floodplain	Acres	132–133	0–0.1	132–133.1
Permanent Impacts to 100-Year and 500-Year Floodplains	Acres	479–589	0–0.1	479–589.1
Temporary Impacts to 100-Year and 500-Year Floodplains	Acres	196–225	0	196–225.0
Total Acres of Impacted Floodplain	Acres	689–790	0–0.1	689–790.1
Total Number of Bridge/Viaduct Crossings of FEMA Zone AE	Count	63–76	NA	63–76.0
Total Number of Bridge/Viaduct Crossings of FEMA Zone A	Count	126–155	NA	126–155.0
Utilities and Energy (Final EIS Section 3.9)				
New Electric TPSS Connections	Count	12–13	0	12–13
Electric Utility Pole Adjustments	Count	74–89	0	74–89
Total Electric Connections and Adjustment	Count	87–102	0	87–102
Abandoned Oil and Gas Wells	Count	22–37	0	22–37
Aesthetics and Scenic Resources (Final EIS Section 3.10)				
Total Number of Beneficial [114]	Count	2	1	3
Total Number of Neutral	Count	8	0	8
Total Number of Adverse	Count	2	0	2
Total Number of Adverse Visual Resource Impacts	Count	10–11	0	10–11
Transportation (Final EIS Section 3.11)				
Rail Crossings [115]	Count	27	0	27
Road Modifications [116] (*Public and Private*)	Count	102–158	0	102–158
Road Modifications [117] (*Public only*)	Count	59–80	0	59–80
Length added to Public Roads (miles)	Miles	16.6–46.9	0	16.6–46.9
Length removed from Public Roads (miles)	Miles	5.0–27.2	0	5.0–27.2
Impacts to airports [118]	Count	0–1	0	0–1
Number of Intersections at LOS E or F	Count	NA	22–25	22–25

TABLE 4—SUMMARY OF POTENTIAL DIRECT IMPACTS [112]—Continued

Evaluation criteria	Measure	Build alts. A–F	Houston Terminal Station options	Total
Elderly and Handicapped (Final EIS Section 3.12)				
Elderly and Handicapped Impacts	NA	Proposed project would be designed, constructed and operated in compliance with ADA; therefore, there would be no impacts related to accessibility of the HSR system for the elderly and handicapped.		
Land Use (Final EIS Section 3.13)				
Existing Land Use Conversion—Temporary	Acres	2,393.2–2,592.4	0–27.4	2,393.2–2,619.8
Existing Land Use Conversion—Permanent	Acres	6,610.0–7,295.6	75.8–92.2	6,685.8–7,387.8
Special Status Farmland—Temporary	Acres	1,459.8–1,719.4	0.0	1,459.8–1,719.4
Special Status Farmland—Permanent	Acres	3,483.5–3,764.3	0.0	3,483.5–3,764.3
Special Status Farmland—Indirect [119]	Acres	697.3–888.2	0.0	697.3–888.2
Displacement—Commercial (primary)	Count	42–65	14–22	56–87
Displacement—Residence (primary)	Count	235–269	0	235–269
Displacement—Community Facilities (primary) [120]	Count	2–3	0	2–3
Estimated Permanent Parcel Acquisitions	Count	1,731–1,847	25–43	1,756–1,890
Estimated Temporary Parcel Acquisitions	Count	258–277	0–1	258–278
Estimated Structure Acquisitions—Agriculture	Count	196–230	0	196–230
Estimated Structure Acquisitions—Commercial	Count	12–18	0–1	12–19
Estimated Structure Acquisitions—Community Facilities	Count	0	0	0
Estimated Structure Acquisitions—Cultural/Civic Resources	Count	1–2	0	1–2
Estimated Structure Acquisitions—Oil and Gas	Count	12–17	0	12–17
Estimated Structure Acquisitions—Residence	Count	49–54	0	49–54
Estimated Structure Acquisitions—Transportation and Utilities	Count	0–1	0	0–1
Socioeconomics and Community Facilities (Final EIS Section 3.14)				
Communities with Disrupted Character and Cohesion	Count	4	0	4
Economic Impacts	NA	Positive		
Employment	Job Years	317,207		
Earnings	2019 billions	$14.50		
Tax Revenue	N	Positive		
Children's Health and Safety [121]	Count	0	0–1	0–1
Community Facilities [122]	Count	5	0–1	5–6
Electromagnetic Fields (Final EIS Section 3.15)				
Electromagnetic Field (EMF) Impacts	NA	No EMI or adverse EMF exposure would occur.		
Safety and Security (Final EIS Section 3.16)				
Permanent Road Modifications resulting in 1 minute or more in additional through travel time.	Count	8–13	0	8–13
Permanent Road Modifications reducing through travel time by 1 minute or more.	Count	0–1	0	0–1
Total fire and EMS service areas bisected by construction	Count	51–57	0	51–57
Fire and EMS providers with high potential for construction effects.	Count	3–5	0	3–5
Fire and EMS providers with localized potential for construction effects.	Count	6–8	0	6–8
Recreational Facilities (Final EIS Section 3.17)				
Parks	Count	0–2	0	0–2
Environmental Justice (Final EIS Section 3.18)				
Number of Minority and/or Low-Income block groups intersected by the Study Area.	Count	80–81	5–7	85–88
Number of all block groups intersected by the Study Area	Count	118–119	8–14	126–133
Identified Minority and/or Low-Income Communities	Count	5	1	5
Disproportionately High and Adverse Impact to Minority and/or Low-Income Communities.	NA	No	No	No

TABLE 4—SUMMARY OF POTENTIAL DIRECT IMPACTS [112]—Continued

Evaluation criteria	Measure	Build alts. A–F	Houston Terminal Station options	Total
Cultural Resources (Final EIS Section 3–19)				
Adverse Impacts to Historic Properties	Count	11–14	0–1	11–15
Soils and Geology (Final EIS Section 3.20)				
LOD Area	Acres	9,173.4–9,718.4	0–103.9	9,173.4–9,822.4
Shrink-Swell Potential—Low	Acres	2,585.8–2,848.3	0	2,585.8–2,848.3
Shrink-Swell Potential—Moderate	Acres	1,456.9–1,485.0	3.0–19.2	1,459.9–1,504.0
Shrink-Swell Potential—High	Acres	2,284.0–2,484.4	0	2,284.0–2,484.4
Shrink-Swell Potential—Very High	Acres	2,697.5–2,806.7	0	2,697.5–2,806.7
Erosion Potential—Low	Acres	1,591.3–1,981.9	0	1,591.3–1,981.9
Erosion Potential—Moderate	Acres	4,472.1–4,786.6	3.0–47.0	4,475.1–4,833.6
Erosion Potential—High	Acres	2,907.9–3,036.8	3.0–16.2	2,910.9–3,053.0
Corrosion Potential—Low	Acres	55.3–81.4	0	55.3–81.4
Corrosion Potential—Moderate	Acres	2,182.0–2,761.1	0	2,182.0–2,761.1
Corrosion Potential—High	Acres	6,764.5–7,021.2	11–51	6,775.5–7,072.2
Prime Farmland Soils	Acres	4,990.8–5,454.7	0	4,990.8–5,454.7
Surface Mines [123]	Count	0 [a]	0	0 [a]
Green House Gas Emissions (Final EIS Section 3.21)				
GHG Emissions	NA	No long-term increases in GHG emissions; would likely reduce GHG emissions by shifting the modes of travel		

G. Executive Order 12898 (Environmental Justice)

In accordance with E.O. 12898 and USDOT Order 5610.2(a), FRA is required to identify and address minority and low-income populations that are affected by disproportionately high and adverse impacts by a Federal action and to provide opportunities for meaningful participation. As part of the preparation of the EIS, persons who have a potential interest in the proposed Dallas to Houston project, including members of minority and low-income populations, were invited to participate in the environmental review process.

FRA identified and addressed the potential effects of the alternatives on minority and low-income populations in Section 3.18, Environmental Justice in the Final EIS. FRA conducted specific outreach efforts to connect with potentially impacted minority and low-income populations in the Study Area and to bring awareness of the proposed project to communities or individuals; gather additional feedback on the potential impacts of the proposed project; and identify appropriate mitigation for minority and low-income populations.

Five neighborhoods or communities identified in minority and/or low-income block groups would be potentially impacted: Downtown Dallas, Le May and Le Forge neighborhood, Hash Road and Nail Drive, Plantation Forest and the Houston Terminal Station Option area (including Spring Branch Super Neighborhood). The EIS identified disproportionately high and adverse effects to minority and/or low-income communities near the station locations in Dallas and Houston related to air-quality impacts during construction, as well as effects related to structure displacement and parcel acquisition, and disruption to community cohesion for the Le May and Le Forge neighborhood, Hash Road and Nail Drive, and Plantation Forest communities. All identified locations where there would be disproportionately high and adverse effects would be on Segment 1 and Segment 5, which are common to all Build Alternatives.

TCRR will mitigate adverse air quality effects during construction through use of dust suppression techniques, wetting and covering construction materials transported near homes or businesses, limiting construction vehicle travel

[112] Section references within this table are to the sections of the Final EIS.

[113] Threatened and Endangered Species acreages include habitat for species with modeled habitat that may be impacted, including Houston toad, large-fruited sand verbena and Navasota ladies'-tresses. Threatened and endangered species in the Study Area that may be impacted but that do not have modeled habitat include the interior least tern and the whooping crane.

[114] A single landscape unit is shared between Segment 5 and the Houston Terminal Station Options; therefore, the total number of beneficial landscape units is the same as Build Alternative A.

[115] Totals for rail impacts do not include rail at Houston Terminal Stations. Totals also include DART-owned rail lines in Dallas County.

[116] Road modifications reflect the number of reroutes, road adjustments, or road over rail constructions that would occur. Some roads are affected by multiple modifications (such as IH–45). Modifications do not reflect total number of roads but total number of road construction sites.

[117] Shared access roads are included in roadway modification lengths. Shared access roads will be developed to provide for maintenance, emergency response access, and private property access, with a corresponding reduction in the number of new public roads to decrease burden on roadway authorities. Shared access roads would be constructed and maintained by TCRR.

[118] Anxiety Aerodrome would be directly impacted by Segment 3B, which are part of Alternatives B and E.

[119] Indirect impacts to special status farmland in Section 3.13, Land Use of the Final EIS are defined as a 25-foot setback added to the LOD to account for indirect loss of productive farmland to accommodate the use of farm and ranch equipment or impacts such as induced wind and changes in irrigation.

[120] The ''Community Facilities'' category in Section 3.14, Socioeconomics and Community Facilities of the Final EIS, encompasses categories of affected structures and facilities that are broken down into more defined categories within Section 3.13, Land Use of the Final EIS, therefore values between the two sections are not identical. Refer to the Section for a complete definition of each category.

[121] Children's health and safety impacts are the result of temporary construction effects. These impacts will no longer exist once construction has ended.

[122] The ''Community Facilities'' category in Section 3.14, Socioeconomics and Community Facilities of the Final EIS, encompasses categories of affected structures and facilities that are broken down into more defined categories within Section 3.13, Land Use of the Final EIS, therefore values between the two sections are not identical. Refer to the Section for a complete definition of each category.

[123] The Midlothian Quarry and Plant in Ellis County was identified at approximately one-half-mile west of Segment 2A. Exact limits would need to be field-verified to confirm or discount presence in the Study Area.

speeds and idling of construction equipment, and by complying with the Texas Low Emission Diesel Fuel Program, as identified in the Mitigation Commitments. TCRR will mitigate localized impacts to the Le May and Le Forge neighborhood, the Hash Road and Nail Drive neighborhood and the Plantation Forest neighborhood by implementing mitigation developed based on consultation with community members, as identified in the Mitigation Commitments. Mitigation includes making offers to acquire all properties and attempts to relocate within proximity or in the same neighborhood (for the Le May and Le Forge neighborhood), extending the notice to vacate period, and offering personal relocation assistance. After implementation of mitigation measures, there would be no disproportionately high and adverse impacts to minority and/or low-income populations as a result of the Build Alternatives and Houston Terminal Station Options.

H. Clean Air Act/Air Quality General Conformity

The Clean Air Act of 1970 (as amended) requires Federal agencies to determine the conformity of proposed actions with respect to State Implementation Plans for attainment of air quality goals.[124] As detailed in Section 3.2, Affected Environment and Environmental Consequences, Air Quality of the Final EIS, FRA assessed air quality impacts through an analysis of emissions that would occur during construction and operation of the proposed Dallas to Houston project for a general conformity analysis.[125] FRA has determined that the predicted annual pollutant emissions during the 5-year construction period in nonattainment areas (Dallas-Fort Worth [DFW], Houston-Galveston-Brazoria [HGB], and Freestone and Anderson Counties nonattainment area [FRE]) generated by the proposed project are all below general conformity *de minimis* threshold values and no conformity determination is required.

I. Section 106 of the National Historic Preservation Act

Section 106 of the National Historic Preservation Act (NHPA) and its implementing regulations [126] require that prior to issuing Federal funding, partial funding, permitting, licensing, approval or taking other action, Federal agencies must take into account the effects of their undertakings on historic properties and provide the Advisory Council on Historic Preservation (ACHP) an opportunity to comment on the undertaking.[127] FRA determined that the undertaking would adversely affect historic properties. However, because FRA is not able to fully determine effects to historic properties prior to this final rule, consistent with 36 CFR 800.14(b)(1)(ii), FRA, in consultation with the Texas Historical Commission (THC), ACHP, USACE, TCRR, and other consulting parties, developed a Programmatic Agreement (PA) for the undertaking. The PA establishes the process that governs the resolution of adverse effects from the undertaking.

FRA provided consulting parties with an opportunity to review and comment on the draft PA prior to the release of the Final EIS and provided the public an opportunity to review the draft PA by appending the draft PA to the Final EIS. During the 30-day public review from May 29, 2020, through June 29, 2020, FRA received a total of four comments that were specific to the PA. These include one comment from THC, two comments from consulting parties, and one comment from the public. In response to these comments, FRA added two new consulting parties to the PA. The executed PA is available on FRA's website.[128]

J. Department of Transportation Act Section 4(f) Determination

Section 4(f) of the USDOT Act of 1966 prohibits USDOT agencies from approving the use of a Section 4(f) property unless: The agency determines that there is no feasible or prudent alternative to such use, and a project includes all possible planning to minimize harm to the property resulting from such use; or a finding can be made that a project, including any measure(s) to minimize harm, has a *de minimis,* or minimal, impact on the Section 4(f) property.[129]

Based on the evaluation contained within Chapter 7.0, Section 4(f) and Section 6(f) Evaluation of the Final EIS, FRA determines that there is no prudent and feasible alternative to the use of three properties protected by Section 4(f): DA.023 (Cadiz Street Underpass and Overpass), Dallas; DA.076a (Guiberson Corporation), Dallas; and DA.110b (Linfield Elementary School).

All possible planning to minimize harm, identified through consultation with officials with jurisdiction, was incorporated through TCRR's design refinements to reduce or eliminate impacts to Section 4(f) properties where reasonably feasible.

FRA provided the Section 4(f) evaluation to U.S. Department of the Interior (DOI) and shared it with the officials with jurisdiction for the Section 4(f) properties with the May 29, 2020, release of the Final EIS. DOI did not comment on FRA's Final Section 4(f) Evaluation.

K. Endangered Species Act/Section 7 U.S. Fish and Wildlife Service Biological Opinion

Under the Endangered Species Act (ESA) of 1973 as amended,[130] the USFWS has the authority to list and monitor the status of species whose populations are threatened or endangered, and including the ecosystems on which they depend. Section 7 of the ESA requires that Federal agencies consult with the USFWS to ensure projects they authorize, fund or carry out would not jeopardize the continued existence of an endangered or threatened species or destroy or adversely modify designated critical habitat.

As described in Section 3.6, Natural Ecological Systems and Protected Species, of the Final EIS, FRA determined the proposed Dallas to Houston project would have ''no effect'' on the West Indian manatee (*Trichechus manatus*), golden-cheeked warbler (*Setophaga* [*Dendroica*] *chrysoparia*), Texas fawnsfoot (*Truncilla macrodon*), and Texas prairie dawn (*Hymenoxys texana*) because suitable habitat (or modeled habitat) was not identified within the Action Area. FRA determined it ''may affect, but is not likely to adversely affect'' the Houston toad (*Anaxyrus houstonensis*), interior least tern (*Sterna antillarum*), whooping crane (*Grus americana*) based on the results of presence/absence species surveys and the implementation of avoidance and mitigation measures. FRA determined it ''may affect, and is likely to adversely affect'' due to the presence of Navasota ladies'-tresses (*Spiranthes parksii*) within the Study Area and the potential for large-fruited sand verbena (*Abronia marcocarpa*) in unsurveyed areas.

On November 14, 2019, FRA submitted a Biological Assessment (BA) to USFWS as part of formal consultation

[124] Clean Air Act, 42 U.S.C. 7401 *et seq.* (1970).

[125] 40 CFR part 51, subpart W, and 40 CFR part 93, subpart B.

[126] 36 CFR 800.

[127] 54 U.S.C. 306108.

[128] FRA. *Dallas to Houston High-Speed Rail—Passenger Service from Houston to Dallas https://railroads.dot.gov/environmental-reviews/dallas-houston-high-speed-rail/dallas-houston-high-speed-rail-passenger,* Record of Decision Attachments, Section 106 Programmatic Agreement.

[129] 49 U.S.C. 303.

[130] 16 U.S.C. 1531, *et seq.*

under Section 7(a)(2) of the ESA. USFWS issued a Biological Opinion (BO) detailing mitigation measures for the proposed Dallas to Houston project on July 8, 2020 (02ETTX00–2019–F–2135).[131] The BO found that the proposed Dallas to Houston project would not likely jeopardize the continued existence of the federally endangered large-fruited sand-verbena or the federally endangered Navasota ladies'-tresses, and includes the following conservation measures: TCRR will offset the loss of large-fruited sand-verbena habitat by conserving acres under permanent protection within the species' known geographic range; TCRR will offset the loss of Navasota ladies'-tresses habitat by conserving acres under permanent protection within the species' known geographic range; and TCRR will institute measures to avoid and minimize potential impacts to the 25 Navasota ladies'-tresses individuals found during species-specific surveys in Madison County.

The BO provided concurrence with FRA's determination that the proposed Dallas to Houston project ''may affect, but is not likely to adversely affect'' the interior least tern, whooping crane, and the Houston toad due to implementation of avoidance and minimization measures detailed in Appendix A of the BO. The BO also included additional conservation recommendations specific to the large-fruited sand-verbena; Navasota ladies'-tresses; landscaping to benefit the large-fruited sand-verbena, Navasota ladies'-tresses, and/or their habitats; the candidate species, Texas fawnsfoot; and avian species including migratory birds. TCRR has agreed to comply with the BO.

L. Executive Order 11990 Preservation of the Nation's Wetlands (Executive Order 11990 & DOT Order 5660.1a)

For projects that are undertaken, financed, or assisted by Federal agencies, potential impact to wetlands are considered under E.O. 11990, Protection of Wetlands. The objective of E.O. 11990 is to minimize the destruction, loss or degradation of wetlands while enhancing and protecting the natural and beneficial values.[132] DOT Order 5660.1a sets forth DOT policy for interpreting E.O. 11990 and requires that transportation projects ''located in or having an impact on wetlands'' should be conducted to assure protection of the Nation's wetlands.

In addition, the USACE and EPA have statutory responsibilities under Section 404 of the Clean Water Act (CWA).[133] Under this Act, discharges of dredged or fill material into waters of the U.S. may require permit authorization. Section 401 of the CWA regulates the discharge of pollutants into waters of the U.S. and is enforced by the Texas Commission on Environmental Quality (TCEQ). The USACE has statutory authority under Section 10 of the Rivers and Harbors Act to regulate the construction of any structure in or over a navigable water of the U.S. and for any structure or work that affects the course, location or condition of the navigable waterbody.[134] Section 14 of the Rivers and Harbors Act, commonly referred to as Section 408, requires approval from USACE to alter a USACE federally authorized civil works project.[135]

As detailed within Section 3.7, Affected Environment and Environmental Consequences, Waters of the U.S. of the Final EIS, impacts would occur within waters of the U.S. during the construction and operation of the proposed Dallas to Houston project. TCRR, in coordination with the USACE Fort Worth and Galveston Districts, is developing the final design to avoid and minimize impacts to waters of the U.S., as practicable. However, due to the linear nature and the curvature restrictions associated with the operation of the HSR system, some crossings would be unavoidable. Impacts to waters of the U.S. would require Section 404/401/10 CWA permits and Section 408 permissions from USACE and TCEQ that would include permit provisions to avoid, minimize, and mitigate impacts. TCRR has agreed to implement compliance and mitigation measures to offset effects of construction within the wetlands and waters of the U.S.[136]

M. Floodplain Management (Executive Order 11988 & DOT Order 5650.2)

E.O. 11988, *Floodplain Management* requires Federal agencies avoid adverse impacts on floodplains to the extent possible, determine whether reasonable alternatives exist that avoid impacts to floodplains, and avoid situations that would support floodplain development if a practicable alternative exists.[137] USDOT Order 5650.2 (*Floodplain Management and Protection*) establishes policies and procedures for transportation projects regarding floodplain impacts that include avoiding and minimizing, where practicable or reasonable, adverse impacts to floodplains and restoring and preserving natural and beneficial floodplain functions that are adversely impacted by transportation projects.[138]

As detailed within 3.8, Affected Environment and Environmental Consequences, Floodplains of the Final EIS, FRA determined that the proposed Dallas to Houston project would impact 748 acres of 100-year and 500-year regulatory floodplains. During construction, the footprint of the LOD additional workspace area, laydown yards and construction workspace would have a temporary impact to the floodplains. The HSR track and supporting facilities (*e.g.,* permanent roads, parking areas, access/maintenance areas, terminals, and non-vegetated embankments) would also result in a permanent impact to the floodplain system and a permanent increase in impervious cover and an increase in ground compaction in those areas during operations.

TCRR's proposed design would minimize potential increases to the floodplain elevations by retaining existing water surface elevations where feasible to avoid impacting the available flood storage and minimizing fill in sensitive areas. Many regulatory floodplains and unregulated stream segments would be fully spanned and potential impacts avoided. TCRR will implement best management practices for construction and operation within floodplains as detailed in the Mitigation Commitments.

N. Executive Order 13175 (Tribal Consultation)

FRA has evaluated this final rule in accordance with the principles and criteria contained in E.O. 13175, ''Consultation and Coordination with Indian Tribal Governments,'' dated

[131] FRA. *Dallas to Houston High-Speed Rail—Passenger Service from Houston to Dallas https://railroads.dot.gov/environmental-reviews/dallas-houston-high-speed-rail/dallas-houston-high-speed-rail-passenger,* Record of Decision Attachments, Biological Opinion. FRA has since reinitiated consultation for the limited purpose of addressing TCRR's recent identification of locations for permittee responsible mitigation. The reinitiation follows TCRR's consultation with the USACE Fort Worth District as part of the Clean Water Act permitting process and does not affect the BO.

[132] The White House, E.O. 11990—Protection of Wetlands, 42 FR 2696.1, Office of the White House Press Secretary, 1977.

[133] 33 U.S.C. 1251 *et seq.*

[134] 33 U.S.C. 403.

[135] 33 U.S.C. 408.

[136] FRA. *Dallas to Houston High-Speed Rail—Passenger Service from Houston to Dallas https://railroads.dot.gov/environmental-reviews/dallas-houston-high-speed-rail/dallas-houston-high-speed-rail-passenger,* Record of Decision Attachments, Mitigation Commitments.

[137] 44 CFR 9, Floodplain Management and Protection of Wetlands, 2003.

[138] USDOT, *Floodplain Management and Protection,* DOT 5650.2, 1979.

November 6, 2000. This final rule will not have a substantial direct effect on one or more Indian tribes, will not impose substantial direct compliance costs on Indian tribal governments, and will not preempt tribal laws. Therefore, the funding and consultation requirements of E.O. 13175 do not apply, and a tribal summary impact statement is not required.

O. Unfunded Mandates Reform Act of 1995

Under section 201 of the Unfunded Mandates Reform Act of 1995 (Pub. L. 104–4, 2 U.S.C. 1531), each Federal agency ''shall, unless otherwise prohibited by law, assess the effects of Federal regulatory actions on State, local, and tribal governments, and the private sector (other than to the extent that such regulations incorporate requirements specifically set forth in law).'' Section 202 of the Act (2 U.S.C. 1532) further requires that ''before promulgating any general notice of proposed rulemaking that is likely to result in the promulgation of any rule that includes any Federal mandate that may result in expenditure by State, local, and tribal governments, in the aggregate, or by the private sector, of $100,000,000 or more (adjusted annually for inflation) in any 1 year, and before promulgating any final rule for which a general notice of proposed rulemaking was published, the agency shall prepare a written statement'' detailing the effect on State, local, and tribal governments and the private sector. This final rule will not result in the expenditure, in the aggregate, of $100,000,000 or more (as adjusted annually for inflation) in any one year, and thus preparation of such a statement is not required.

P. Energy Impact

E.O. 13211, ''Actions Concerning Regulations That Significantly Affect Energy Supply, Distribution, or Use,'' requires Federal agencies to prepare a Statement of Energy Effects for any ''significant energy action.'' [139] FRA has evaluated this final rule in accordance with E.O. 13211 and determined that this regulatory action is not a ''significant energy action'' within the meaning of the E.O.

E.O. 13783, ''Promoting Energy Independence and Economic Growth,'' requires Federal agencies to review regulations to determine whether they potentially burden the development or use of domestically produced energy resources, with particular attention to oil, natural gas, coal, and nuclear energy resources.[140] FRA has determined this regulatory action will not burden the development or use of domestically produced energy resources.

List of Subjects in 49 CFR Part 299

High-speed rail, Incorporation by reference, Railroad safety, Reporting and recordkeeping requirements, Tokaido Shinkansen.

The Rule

For the reasons discussed in the preamble, FRA adds part 299 to chapter II, subtitle B of title 49, Code of Federal Regulations as follows:

■ 1. Part 299 is added to read as follows:

PART 299—TEXAS CENTRAL RAILROAD HIGH–SPEED RAIL SAFETY STANDARDS

Subpart A—General Requirements

Sec.
299.1 Purpose and scope.
299.3 Applicability.
299.5 Definitions.
299.7 Responsibility for compliance.
299.9 Notifications and filings.
299.11 Electronic recordkeeping.
299.13 System description.
299.15 Special approvals.
299.17 Incorporation by reference.

Subpart B—Signal and Trainset Control System

Sec.
299.201 Technical PTC system requirements.
299.203 PTC system required.
299.205 PTC System Certification.
299.207 PTC Safety Plan content requirements.
299.209 PTC system use and failures.
299.211 Communications and security requirements.
299.213 Records retention.
299.215 Operations and Maintenance Manual.

Subpart C—Track Safety Standards

Sec.
299.301 Restoration or renewal of track under traffic conditions.
299.303 Measuring track not under load.
299.305 Drainage.
299.307 Vegetation.
299.309 Classes of track: operating speed limits.
299.311 Track geometry; general.
299.313 Track geometry; performance based.
299.315 Curves; elevations and speed limitations.
299.317 Track strength.
299.319 Track fixation and support.
299.321 Defective rails.
299.323 Continuous welded rail (CWR) plan.
299.325 Continuous welded rail (CWR); general.
299.327 Rail end mismatch.
299.329 Rail joints and torch cut rails.
299.331 Turnouts and crossings generally.
299.333 Frog guard rails and guard faces; gauge.
299.335 Derails.
299.337 Automated vehicle-based inspection systems.
299.339 Daily sweeper inspection.
299.341 Inspection of rail in service.
299.343 Initial inspection of new rail and welds.
299.345 Visual inspections; right-of-way.
299.347 Special inspections.
299.349 Inspection records.
299.351 Qualifications for track maintenance and inspection personnel.
299.353 Personnel qualified to supervise track restoration and renewal.
299.355 Personnel qualified to inspect track.
299.357 Personnel qualified to inspect and restore continuous welded rail.

Subpart D—Rolling Stock

Sec.
299.401 Clearance requirements.
299.403 Trainset structure.
299.405 Trainset interiors.
299.407 Glazing.
299.409 Brake system.
299.411 Bogies and suspension system.
299.413 Fire safety.
299.415 Doors.
299.417 Emergency lighting.
299.419 Emergency communication.
299.421 Emergency roof access.
299.423 Markings and instructions for emergency egress and rescue access.
299.425 Low-location emergency exit path marking.
299.427 Emergency egress windows.
299.429 Rescue access windows.
299.431 Driver's controls and cab layout.
299.433 Exterior lights.
299.435 Electrical system design.
299.437 Automated monitoring.
299.439 Event recorders.
299.441 Trainset electronic hardware and software safety.
299.443 Safety appliances.
299.445 Trainset inspection, testing, and maintenance requirements.
299.447 Movement of defective equipment.

Subpart E—Operating Rules

Sec.
299.501 Purpose.
299.503 Operating rules; filing and recordkeeping.
299.505 Programs of operational tests and inspections; recordkeeping.
299.507 Program of instruction on operating rules; recordkeeping.

Subpart F—System Qualification Tests

Sec.
299.601 Responsibility for verification demonstrations and tests.
299.603 Preparation of system-wide qualification test plan.
299.605 Functional and performance qualification tests.
299.607 Pre-revenue service systems integration testing.
299.609 Vehicle/track system qualification.
299.611 Simulated revenue operations.
299.613 Verification of compliance.

[139] 66 FR 28355 (May 22, 2001).

[140] 82 FR 16093 (Mar. 31, 2017).

Subpart G—Inspection, Testing, and Maintenance Program

Sec.
299.701 General requirements.
299.703 Compliance.
299.705 Standard procedures for safely performing inspection, testing, and maintenance, or repairs.
299.707 Maintenance intervals.
299.709 Quality control program.
299.711 Inspection, testing, and maintenance program format.
299.713 Program approval procedures.

Appendix A to Part 299—Criteria for Certification of Crashworthy Event Recorder Memory Module

Appendix B to Part 299—Cab Noise Test Protocol

Authority: 49 U.S.C. 20103, 20107, 20133, 20141, 20302–20303, 20306, 20701–20702, 21301–21302, 21304; 28 U.S.C. 2461, note; and 49 CFR 1.89.

Subpart A—General Requirements

§ 299.1 Purpose and scope.

This part prescribes minimum Federal safety standards for the high-speed transportation system described in detail in § 299.13, known as Texas Central Railroad, LLC and hereinafter referred to as the ''railroad.'' The purpose of this part is to prevent accidents, casualties, and property damage which could result from operation of this system.

§ 299.3 Applicability.

(a) This part applies only to the railroad, as described in § 299.13.

(b) Except as stated in paragraph (c) of this section, this part, rather than the generally applicable Federal railroad safety regulations, shall apply to the railroad.

(c) The following Federal railroad safety regulations found in Title 49 of the Code of Federal Regulations, and any amendments are applicable to the railroad.

(1) Part 207, Railroad Police Officers;

(2) Part 209, Railroad Safety Enforcement Procedures;

(3) Part 210, Railroad Noise Emission Compliance Regulations;

(4) Part 211, Rules of Practice;

(5) Part 212, State Safety Participation Regulations;

(6) Part 214, Railroad Workplace Safety, except § 214.339;

(7) Part 216, Special Notice and Emergency Order Procedures;

(8) Part 218, Railroad Operating Practices;

(9) Part 219, Control of Alcohol and Drug Use;

(10) Part 220, Radio Standards and Procedures;

(11) Part 225, Railroad Accidents/Incidents: Reports, Classification, and Investigations;

(12) Part 227, Occupational Noise Exposure except § 227.119(c)(10) and (11) with respect to the railroad's high-speed trainsets only, which shall comply with 299.431(h) and (i);

(13) Part 228, Hours of Service of Railroad Employees;

(14) Part 233, Signal Systems Reporting Requirements;

(15) Part 235, Instructions Governing Applications for Approval of a Discontinuance or Material Modification of a Signal System or Relief from the Requirements of Part 236, except § 235.7;

(16) Part 236, Installation, Inspection, Maintenance and Repair of Signal and Train Control System, Devices, and Appliances, subparts A through G, as excepted by the railroad's PTC Safety Plan (PTCSP) under § 299.201(d);

(17) Part 237, Railroad Bridge Safety Standards;

(18) Part 239, Passenger Train Emergency Preparedness;

(19) Part 240, Qualification and Certification of Locomotive Engineers;

(20) Part 242, Qualification and Certification of Train Conductors;

(21) Part 243, Training, Qualification, and Oversight for Safety-Related Railroad Employees;

(22) Part 270, System Safety Program

(23) Part 272, Critical Incident Stress Plans; and

(24) The following parts shall apply to the railroad's maintenance-of-way equipment as it is used in work trains, rescue operations, yard movements, and other non-passenger functions:

(i) Part 215, Railroad Freight Car Safety Standards;

(ii) Part 223, Glazing Standards;

(iii) Part 229, Railroad Locomotive Safety Standards, except—

(A) Section 229.71. Instead, the railroad's maintenance-of-way equipment shall comply with § 299.401(b), except for the sweeper vehicle, which shall have a clearance above top of rail no less than 35 mm (1.77 inches).

(B) Section 229.73. Instead, the railroad's maintenance-of-way equipment shall be designed so as to be compatible with the railroad's track structure under subpart C of this part.

(iv) Part 231, Railroad Safety Appliance Standards; and,

(v) Part 232, Railroad Power Brakes and Drawbars.

(d) The Federal railroad safety statutes apply to all railroads, as defined in 49 U.S.C. 20102. The railroad covered by this part is a railroad under that definition. Therefore, the Federal railroad safety statutes, Subtitle V of Title 49 of the United States Code, apply directly to the railroad. However, pursuant to authority granted under 49 U.S.C. 20306, FRA has exempted the railroad from certain requirements of 49 U.S.C. ch. 203.

§ 299.5 Definitions.

As used in this part—

Absolute block means a block of track circuits in which no trainset is permitted to enter while occupied by another trainset.

Adjusting/de-stressing means the procedure by which a rail's neutral temperature is readjusted to the desired value. It typically consists of cutting the rail and removing rail anchoring devices, which provides for the necessary expansion and contraction, and then re-assembling the track.

Administrator means the Administrator of the FRA or the Administrator's delegate.

Associate Administrator means FRA's Associate Administrator for Safety and Chief Safety Officer, or that person's delegate.

Automatic train control (ATC) means the signaling system, composed of ground and on-board equipment. The on-board equipment continually receives a signal from the ground equipment. ATC on-board equipment controls the trainset speed to prevent train-to-train collisions and overspeed derailments.

ATC cut-out mode means the mode of ATC on-board equipment used for emergency operations to disable the ATC on-board equipment on the trainset.

ATC main line mode means the mode of ATC on-board equipment which controls trainset speed on mainlines.

ATC overrun protection means an overlay of the ATC shunting mode to prevent overrun at the end of a track.

ATC shunting mode means the mode of ATC on-board equipment which restricts the trainsets maximum speed to 30 km/h (19 mph).

Brake, air means a combination of devices operated by compressed air, arranged in a system and controlled electrically or pneumatically, by means of which the motion of a train or trainset is retarded or arrested.

Brake, disc means a retardation system used on the passenger trainsets that utilizes flat discs as the braking surface.

Brake, electric means a trainset braking system in which the kinetic energy of a moving trainset is used to generate electric current at the traction motors, which is then returned into the catenary system.

Brake, emergency application means a brake application initiated by a de-energized brake command and is retrievable when there is no malfunction that initiates an automatic emergency brake application. An emergency brake application can be initiated by the driver or automatically by ATC. An emergency brake application, as defined here, is equivalent to a full-service brake application in the U.S.

Brake, urgent application means an irretrievable brake application designed to minimize the braking distance. An urgent brake application, as defined here, is the equivalent of an emergency brake application in the U.S.

Bogie means an assembly that supports the weight of the carbody and which incorporates the suspension, wheels and axles, traction motors and friction brake components. Each unit of a trainset is equipped with two bogies. In the U.S., a bogie is commonly referred to as a truck.

Broken rail means a partial or complete separation of an otherwise continuous section of running rail, excluding rail joints, expansion joints, and insulated joints.

Buckling incident/buckling rail means the formation of a lateral misalignment caused by high longitudinal compressive forces in a rail sufficient in magnitude to exceed the track geometry alignment safety limits defined in § 299.311.

Buckling-prone condition means a track condition that can result in the track being laterally displaced due to high compressive forces caused by critical rail temperature combined with insufficient track strength and/or train dynamics.

Cab means the compartment or space within a trainset that is designed to be occupied by a driver and contain an operating console for exercising control over the trainset.

Cab car means a rail vehicle at the leading or trailing end, or both, of a trainset which has a driver's cab and is intended to carry passengers, baggage, or mail. A cab car may or may not have propelling motors.

Cab end structure means the main support projecting upward from the underframe at the cab end of a trainset.

Cab signal means a signal located in the driver's compartment or cab, indicating a condition affecting the movement of a trainset.

Calendar day means a time period running from one midnight to the next midnight on a given date.

Cant deficiency means the additional height, which if added to the outer rail in a curve, at the designated vehicle speed, would provide a single resultant force, due to the combined effects of weight and centrifugal force on the vehicle, having a direction perpendicular to the plane of the track.

Continuous welded rail (CWR) means rail that has been welded together into lengths exceeding 122 m (400 feet). Rail installed as CWR remains CWR, regardless of whether a joint is installed into the rail at a later time.

Consist, fixed means a semi-permanently coupled trainset that is arranged with each unit in a specific location and orientation within the trainset.

Core system, high-speed means the safety-critical systems, sub-systems, and procedures required for a high-speed system operation that assures a safe operation as required within this part.

Crewmember means a railroad employee called to perform service covered by 49 U.S.C. 21103.

Critical buckling stress means the minimum stress necessary to initiate buckling of a structural member.

Desired rail installation temperature range means the rail temperature range in a specific geographical area, at which forces in CWR installed in that temperature range should not cause a track buckle in extreme heat, or a pull-apart during extreme cold weather.

Disturbed track means the disturbance of the roadbed or ballast section, as a result of track maintenance or any other event, which reduces the lateral or longitudinal resistance of the track, or both.

Driver means any person who controls the movement of a trainset(s) from the cab, and is required to be certified under 49 CFR part 240. A driver, as used in this part, is equivalent to a locomotive engineer.

Employee or railroad employee means an individual who is engaged or compensated by the railroad or by a contractor to the railroad to perform any of the duties defined in this part.

Event recorder means a device, designed to resist tampering, that monitors and records data, as detailed in §§ 299.439 and 236.1005(d) of this chapter, over the most recent 48 hours of operation of the trainset.

Expansion joint means a piece of special trackwork designed to absorb heat-induced expansion and contraction of the rails.

General control center means the location where the general control center staff work.

General control center staff means qualified individuals located in the general control center who are responsible for the safe operation of the railroad's high-speed passenger rail system. The duties of individuals who work at the general control center include: Trainset movement control, crew logistic management, signaling, passenger services, rolling stock logistic management, and right-of-way maintenance management.

Glazing, end-facing means any exterior glazing installed in a trainset cab located where a line perpendicular to the exterior surface glazing material makes horizontal angle of 50 degrees or less with the longitudinal center line of the rail vehicle in which the panel is installed. A glazing panel that curves so as to meet the definition for both side-facing and end-facing glazing is end-facing glazing.

Glazing, exterior means a glazing panel that is an integral part of the exterior skin of a rail vehicle with a surface exposed to the outside environment.

Glazing, side-facing means any glazing located where a line perpendicular to the exterior surface of the panel makes an angle of more than 50 degrees with the longitudinal center line of the rail vehicle in which the panel is installed.

High voltage means an electrical potential of more than 150 volts.

In passenger service/in revenue service means a trainset that is carrying, or available to carry, passengers. Passengers need not have paid a fare in order for the trainset to be considered in passenger or in revenue service.

In service means, when used in connection with a trainset, a trainset subject to this part that is in revenue service, unless the equipment—

(1) Is being handled in accordance with § 299.447, as applicable;

(2) Is in a repair shop or on a repair track;

(3) Is on a storage track and is not carrying passengers; or,

(4) Is parked at a station location and has been properly secured in accordance with §§ 299.409(n) and 299.431(d).

Insulated joint, glued means a rail joint located at the end of a track circuit designed to insulate electrical current from the signal system in the rail.

Interior fitting means any component in the passenger compartment which is mounted to the floor, ceiling, sidewalls, or end walls and projects into the passenger compartment more than 25 mm (1 in.) from the surface or surfaces to which it is mounted. Interior fittings do not include side and end walls, floors, door pockets, or ceiling lining materials, for example.

Intermediate car means a passenger car or unit of a trainset located between cab cars which may or may not have propelling motors.

L/V ratio means the ratio of the lateral force that any wheel exerts on an individual rail to the vertical force exerted by the same wheel on the rail.

Lateral means the horizontal direction perpendicular to the direction of travel.

Locomotive means a piece of on-track rail equipment, other than hi-rail, specialized maintenance, or other similar equipment, which may consist of one or more units operated from a single control stand with one or more propelling motors designed for moving other passenger equipment; with one or more propelling motors designed to transport freight or passenger traffic, or both; or without propelling motors but with one or more control stands.

Longitudinal means in a direction parallel to the direction of travel of a rail vehicle.

Marking/delineator means a visible notice, sign, symbol, line or trace.

N700 means the N700 series trainset that is based on trainsets currently in, or future variants operated on, JRC's Tokaido Shinkansen system, or any unit thereof.

Occupied volume means the volume of a passenger car or a unit in a trainset where passengers or crewmembers are normally located during service operation, such as the cab and passenger seating areas. The entire width of a vehicle's end compartment that contains a control stand is an occupied volume. A vestibule is typically not considered occupied.

On-board attendant means a qualified individual on a trainset that is responsible for coordination with a station platform attendant to assure safety during passenger boarding and alighting within a station. An on-board attendant, as used in this part, is equivalent to a passenger conductor.

Override means to climb over the normal coupling or side buffers and linking mechanism and impact the end of the adjoining rail vehicle or unit above the underframe.

Overrun protection coil means track circuit cables placed short of turnouts, or crossovers within stations and trainset maintenance facilities to prevent unauthorized route access.

Passenger car means a unit of a trainset intended to provide transportation for members of the general public. A cab car and an intermediate car are considered passenger cars.

Passenger compartment means an area of a passenger car that consists of a seating area and any vestibule that is connected to the seating area by an open passageway.

Passenger equipment means the N700 series trainset that is based on trainsets currently in, or future variants operated on, JRC's Tokaido Shinkansen system, or any unit thereof.

Permanent deformation means the undergoing of a permanent change in shape of a structural member of a rail vehicle.

PTC means positive train control as further described in § 299.201.

Qualified individual means a person that has successfully completed all instruction, training, and examination programs required by both the employer and this part, and that the person, therefore, may reasonably be expected to perform his or her duties proficiently in compliance with all Federal railroad safety laws, regulations, and orders.

Rail neutral temperature is the temperature at which the rail is neither in compression nor tension.

Rail temperature means the temperature of the rail, measured with a rail thermometer.

Rail vehicle means railroad rolling stock, including, but not limited to, passenger and maintenance vehicles.

Railroad equipment means all trains, trainsets, rail cars, locomotives, and on-track maintenance vehicles owned or used by the railroad.

Railroad, the means the company, also known as the Texas Central Railroad, LLC, which is the entity that will operate and maintain the high-speed rail system initially connecting Dallas to Houston, Texas, and is responsible for compliance with all aspects of this rule.

Repair point means a location designated by the railroad where repairs of the type necessary occur on a regular basis. A repair point has, or should have, the facilities, tools, and personnel qualified to make the necessary repairs. A repair point need not be staffed continuously.

Representative car/area means a car/area that shares the relevant characteristics as the car(s)/area(s) it represents (*i.e.,* same signage/marking layout, and charging light system for passive systems or light fixtures and power system for electrically powered systems).

Rollover strength means the strength provided to protect the structural integrity of a rail vehicle in the event the vehicle leaves the track and impacts the ground on its side or roof.

Safety appliance means an appliance, required under 49 U.S.C. ch. 203, excluding power brakes. The term includes automatic couplers, handbrakes, crew steps, handholds, handrails, or ladder treads made of steel or a material of equal or greater mechanical strength used by the traveling public or railroad employees that provides a means for safe coupling, uncoupling, or ascending or descending passenger equipment.

Safety-critical means a component, system, software, or task that, if not available, defective, not functioning, not functioning correctly, not performed, or not performed correctly, increases the risk of damage to railroad equipment or injury to a passenger, railroad employee, or other person.

Search, valid means a continuous inspection for internal rail defects where the equipment performs as intended and equipment responses are interpreted by a qualified individual as defined in subpart C.

Semi-permanently coupled means coupled by means of a drawbar or other coupling mechanism that requires tools to perform the coupling or uncoupling operation. Coupling and uncoupling of each semi-permanently coupled unit in a trainset can be performed safely only while at a trainset maintenance facility where personnel can safely get under a unit or between units, or other location under the protections of

subpart B of part 218 of this chapter.

Side sill means that portion of the underframe or side at the bottom of the rail vehicle side wall.

Shinkansen, Tokaido means the high-speed rail system operated by the Central Japan Railway Company between Tokyo and Shin-Osaka, Japan, that is fully dedicated and grade separated.

Slab track means railroad track structure in which the rails are attached to and supported by a bed or slab, usually of concrete (or asphalt), which acts to transfer the load and provide track stability.

Spall, glazing means small pieces of glazing that fly off the back surface of the glazing when an object strikes the front surface.

Speed, maximum approved means the maximum trainset speed approved by FRA based upon the qualification tests conducted under § 299.609(g).

Speed, maximum authorized means the speed at which trainsets are permitted to travel safely, as determined by all operating conditions and signal indications.

Speed, maximum safe operating means the highest speed at which trainset braking may occur without thermal damage to the discs.

Station platform attendant means a qualified individual positioned on the station platform in close proximity to the train protection switches while a trainset is approaching and departing a station, and is responsible for coordination with an on-board attendant to assure safety during passenger boarding and alighting within a station.

Superelevation means the actual elevation of the outside rail above the inside rail.

Sweeper vehicle means a rail vehicle whose function is to detect obstacles within the static construction gauge prior to the start of daily revenue service.

Tight track means CWR which is in a considerable amount of compression.

Track acceleration measurement system (TAMS) means an on-track, vehicle-borne technology used to measure lateral and vertical carbody accelerations.

Track geometry measurement system (TGMS) means an on-track, vehicle-borne technology used to measure track surface, twist, crosslevel, alignment, and gauge.

Track lateral resistance means the resistance provided to the rail/crosstie structure against lateral displacement.

Track longitudinal resistance means the resistance provided by the rail anchors/rail fasteners and the ballast section to the rail/crosstie structure against longitudinal displacement.

Track, non-ballasted means a track structure not supported by ballast in which the rails are directly supported by concrete or steel structures. Non-ballasted track can include slab track and track structures where the rails are directly fixed to steel bridges or to servicing pits within trainset maintenance facilities.

Train means a trainset, or locomotive or locomotive units coupled with or without cars.

Train-induced forces means the vertical, longitudinal, and lateral dynamic forces which are generated during train movement and which can contribute to the buckling potential of the rail.

Train protection switch means a safety device located on station platforms and on safe walkways along the right-of-way. The train protection switch is tied directly into the ATC system and is used in the event that trainsets in the immediate area must be stopped.

Trainset means a passenger train including the cab cars and intermediate cars that are semi-permanently coupled to operate as a single consist. The individual units of a trainset are uncoupled only for emergencies or maintenance conducted in repair facilities.

Trainset maintenance facility means a location equipped with the special tools, equipment, and qualified individuals capable of conducting pre-service inspections and regular inspections on the trainsets in accordance with the railroad's inspection, testing, and maintenance program. Trainset maintenance facilities are also considered repair points.

Transponder means a wayside component of the ATC system used to provide trainset position correction on the mainline or to provide an overlay of overrun protection within a trainset maintenance facility.

Underframe means the lower horizontal support structure of a rail vehicle.

Unit, trainset means a cab car or intermediate car of a trainset.

Vestibule means an area of a passenger car that normally does not contain seating, is located adjacent to a side exit door, and is used in passing from a seating area to a side exit door.

Yard means a system of tracks within defined limits and outside of the territory controlled by signals, which can be used for the making up of non-passenger trains or the storing of maintenance-of-way equipment.

Yield strength means the ability of a structural member to resist a change in length caused by an applied load. Exceeding the yield strength will cause permanent deformation of the member.

§ 299.7 Responsibility for compliance.

(a) The railroad shall not—

(1) Use, haul, or permit to be used or hauled on its line(s) any trainset—

(i) With one or more defects not in compliance with this part; or

(ii) That has not been inspected and tested as required by a provision of this part.

(2) Operate over any track, except as provided in paragraph (e) of this section, with one or more conditions not in compliance this part, if the railroad has actual knowledge of the facts giving rise to the violation, or a reasonable person acting in the circumstances and exercising reasonable care would have that knowledge.

(3) Violate any other provision of this part or any provision of the applicable FRA regulations listed under § 299.3(c).

(b) For purposes of this rule, a trainset shall be considered in use prior to the trainset's departure as soon as it has received, or should have received the inspection required under this part for movement and is ready for service.

(c) Although many of the requirements of this part are stated in terms of the duties of the railroad, when any person (including, but not limited to, a contractor performing safety-related tasks under contract to the railroad subject to this part) performs any function required by this part, that person (whether or not the railroad) is required to perform that function in accordance with this part.

(d) For purposes of this part, the railroad shall be responsible for compliance with all track safety provisions set forth in subpart C of this part. When the railroad and/or its assignee have actual knowledge of the facts giving rise to a violation, or a reasonable person acting in the circumstances and exercising reasonable care would have knowledge that the track does not comply with the requirements of this part, it shall—

(1) Bring the track into compliance;

(2) Halt operations over that track; or

(3) Continue operations over the segment of non-complying track in accordance with the provisions of § 299.309(b) or (c).

(e) The FRA Administrator may hold the railroad, the railroad's contractor, or both responsible for compliance with the requirements of this part and subject to civil penalties.

§ 299.9 Notifications and filings.

All notifications and filings to the FRA required by this part shall be submitted to the Associate Administrator for Railroad Safety and Chief Safety Officer, 1200 New Jersey Avenue SE, Washington, DC 20590, unless otherwise specified.

§ 299.11 Electronic recordkeeping.

The railroad's electronic recordkeeping shall be retained such that—

(a) The railroad maintains an information technology security program adequate to ensure the integrity of the electronic data storage system, including the prevention of unauthorized access to the program logic or individual records;

(b) The program and data storage system must be protected by a security system that utilizes an employee identification number and password, or a comparable method, to establish appropriate levels of program access meeting all of the following standards:

(1) No two individuals have the same electronic identity; and

(2) A record cannot be deleted or altered by any individual after the record is certified by the employee who created the record.

(c) Any amendment to a record is either—

(1) Electronically stored apart from the record that it amends; or

(2) Electronically attached to the record as information without changing the original record;

(d) Each amendment to a record uniquely identifies the person making the amendment;

(e) The system employed by the railroad for data storage permits reasonable access and retrieval; and

(f) Information retrieved from the system can be easily produced in a printed format which can be readily provided to FRA representatives in a timely manner and authenticated by a designated representative of the railroad as a true and accurate copy of the railroad's records if requested to do so by FRA representatives.

§ 299.13 System description.

(a) *General.* This section describes the components, operations, equipment, and systems of the railroad's high-speed rail system. The railroad shall adhere to the following general requirements:

(1) The railroad shall not exceed the maximum trainset speed approved by FRA under § 299.609(g) while in revenue service, up to a maximum speed of 330 km/h (205 mph).

(2) The railroad shall not transport or permit to be transported in revenue service any product that has been established to be a hazardous material pursuant to 49 CFR part 172, as amended.

(3) The railroad shall not conduct scheduled right-of-way maintenance on a section of the right-of-way prior to that section of the right-of-way being cleared of all revenue service trainsets (including any trainset repositioning moves), and proper action is taken by the general control center staff to protect incursion into established maintenance zones by revenue trainsets. Additionally, the railroad shall not commence revenue service prior to completion of the maintenance activities, that section of the right-of-way being cleared of all maintenance-of-way equipment. Further, the railroad is prohibited from commencing revenue operations until after conclusion of the daily sweeper inspection, under § 299.339, and the general control center returning the signal and trainset control system to the state required to protect revenue operations.

(b) *Right-of-way.* (1) The railroad shall operate on a completely dedicated right-of-way and shall not operate or conduct joint operations with any other freight equipment, other than the railroad's maintenance-of-way equipment, or passenger rail equipment. Only the railroad's high-speed trainsets approved for revenue operations under this part, and any equipment required for construction, maintenance, and rescue purposes may be operated over the railroad's right-of-way.

(2) There shall be no public highway-rail grade crossings. Animal and non-railroad equipment crossings shall be accomplished by means of an underpass or overpass. Private at-grade crossings shall be for the exclusive use by the railroad and shall be limited to track Classes H0 and H1.

(3) The railroad shall develop and comply with a right-of-way barrier plan. The right-of-way barrier plan shall be maintained at the system headquarters and will be made available to FRA upon request. At a minimum, the plan will contain provisions in areas of demonstrated need for the prevention of—

(i) Vandalism;

(ii) Launching of objects from overhead bridges or structures onto the path of trainsets;

(iii) Intrusion of vehicles from adjacent rights-of-way; and

(iv) Unauthorized access to the right-of-way.

(4) The entire perimeter of the system's right-of-way, except for elevated structures such as bridges and viaducts, shall be permanently fenced. Elevated structures shall be equipped with walkways and safety railing.

(5) The railroad shall install intrusion detectors in accordance with the requirements set forth in subpart B of this part.

(6) The railroad shall install rain, flood, and wind detectors in locations identified by the railroad, based on relevant criteria used by JRC to provide adequate warning of when operational restrictions are required due to adverse weather conditions. Operating restrictions shall be defined in the railroad's operating rules.

(7) Access to the right-of-way for maintenance-of-way staff shall be provided on both sides of the right-of-way in accordance with the inspection, testing, and maintenance program. This access shall be protected against entry by unauthorized persons.

(8) Provisions shall be made to permit emergency personnel to access the right-of-way in accordance with the Emergency Preparedness Plan pursuant to part 239 of this chapter. This access shall be protected against entry by unauthorized persons.

(9) Throughout the length of the right-of-way, the railroad shall install walkways located at a safe distance from the tracks at a minimum distance of 2.0 m (6.56 feet) from the field side of the outside rail for a design speed of 330 km/h (205 mph). The walkways shall be used primarily for track and right-of-way inspection, but may be used for emergency evacuation or rescue access.

(10) Access to the right-of-way by maintenance-of-way personnel shall not be allowed during revenue operations unless the access is outside the minimum safe distance defined in § 299.13(b)(9). In the event of unscheduled maintenance or repair, emergency access will be provided under specific circumstances allowed under the railroad's operating rules and the inspection, testing, and maintenance program.

(11) The railroad shall record all difficulties and special situations regarding geology, hydrology, settlement, landslide, concrete, and quality criteria that arise during construction of the right-of-way. After construction, the railroad shall monitor

the stability and quality standards of structures such as bridges, viaducts, and earth structures.

(12) The railroad shall make available for review by the FRA the track layout drawings which show, at a minimum, the following information:

(i) Length of straight sections, spirals and curves, curve radius, superelevation, superelevation variations, gradients, and vertical curve radii;

(ii) Turnouts and crossover location, technology, and geometry;

(iii) Maximum operating speed and allowable cant deficiencies;

(iv) Signal boxes, Go/No-Go signals, and communication devices;

(v) Details and arrangement of track circuitry;

(vi) Power feeding equipment including sectionalization, and return routing;

(vii) Location of accesses to the right-of-way; and

(viii) The railroad shall also submit the specifications for the track layout, permissible track forces, components such as rail, ballast, ties, rail fasteners, and switches.

(13) Protection devices shall be installed on all highway bridge overpasses in accordance with the right-of-way plan in paragraph (b)(3) of this section.

(14) There shall be no movable bridges in the railroad's system. Stationary rail bridges located over highways or navigable waterways shall have their foundations, piers, or other support structure appropriately protected against the impact of road vehicles or water-borne vessels.

(15) Train protection switches shall be installed at regular intervals on both sides of the right-of-way at intervals defined by the railroad and at intervals not to exceed 60 m (197 feet) on platforms within stations. These devices shall act directly on the ATC system.

(16) The railroad shall use the design wheel and rail profiles, service-proven on the Tokaido Shinkansen system, or alternate wheel and rail profiles approved by FRA.

(c) *Railroad system safety*—(1) *Inspection, testing, and maintenance procedures and criteria.* The railroad shall develop, implement, and use a system of inspection, testing, maintenance procedures and criteria, under subpart G of this part, which are initially based on the Tokaido Shinkansen system service-proven procedures and criteria, to ensure the integrity and safe operation of the railroad's rolling stock, infrastructure, and signal and trainset control system. The railroad may, subject to FRA review and approval, implement inspection, testing, maintenance procedures and criteria, incorporating new or emerging technology, under § 299.713(c)(4).

(2) *Operating practices.* The railroad shall develop, implement, and use operating rules, which meet the standards set forth in subpart E of this part and which are based on practices and procedures proven on the Tokaido Shinkansen system to ensure the integrity and safe operation of the railroad's system. The railroad shall have station platform attendants on the platform in close proximity to the train protection switches required by paragraph (b)(15) of this section, while trainsets are approaching and departing the station. The railroad's operating rules shall require coordination between on-board crew and station platform attendants to assure safety during passenger boarding and alighting from trainsets at stations.

(3) *Personnel qualification requirements.* The railroad shall develop, implement, and use a training and testing program, which meets the requirements set forth in this part and part 243 of this chapter, to ensure that all personnel, including railroad employees and employees of railroad contractors, possess the skills and knowledge necessary to effectively perform their duties.

(4) *System qualification tests.* The railroad shall develop, implement, and use a series of operational and design tests, which meet the standards set forth in subpart F of this part, to demonstrate the safe operation of system components, and the system as a whole.

(d) *Track and infrastructure.* (1) The railroad shall construct its track and infrastructure to meet all material and operational design criteria, within normal acceptable construction tolerances, and to meet the requirements set forth in subpart C of this part.

(2) The railroad shall operate on nominal standard gauge, 1,435 mm (56.5 inches), track.

(3) The railroad shall install and operate on double track throughout the mainlines, with a minimum nominal distance between track centerlines of 4 m (13.1 feet) for operating speeds up to 170 km/h (106 mph) (track Classes up to H4) and 4.2 m (13.8 feet) for operating speeds greater than 170 km/h (106 mph) (track Classes H5 and above). Generally, each track will be used for a single direction of traffic, and trainset will not overtake each other on mainline tracks (except at non-terminal station locations). The railroad may install crossover connections between the double track at each station, and at regular intervals along the line to permit flexibility in trainset operations, maintenance, and emergency rescue.

(4) The railroad's main track (track Classes H4 and above) shall consist of continuous welded rail. Once installed, the rail shall be field-welded to form one continuous track segment except rail expansion joints and where glued-insulated joints are necessary for signaling purposes. The rail shall be JIS E 1101 60 kg rail, as specified in JIS E 1101:2001(E) as amended by JIS E 1101:2006(E), and JIS E 1101:2012(E) (all incorporated by reference, see § 299.17).

(5) In yards and maintenance facilities, where operations will be at lower speeds, the railroad shall install either JIS E 1101 50kgN rail or JIS E 1101 60 kg rail as specified in JIS E 1101:2001(E) as amended by JIS E 1101:2006(E), and JIS E 1101:2012(E) (all incorporated by reference, see § 299.17).

(6) The railroad shall use either ballasted or non-ballasted track to support the track structure, as appropriate for the intended high-speed system.

(i) Except as noted in paragraph (c)(6)(ii) of this section, for ballasted mainline track structure, the railroad shall install pre-stressed concrete ties.

(ii) For special track work such as turnouts and expansion joints, and at transitions to bridges, and for non-ballasted track, the railroad shall install either pre-stressed, composite ties, or use direct fixation. Detailed requirements are included in subpart C of this part.

(7) Turnouts, expansion joints and glued-insulated joints shall be of the proven design as used on the Tokaido Shinkansen system.

(8) The trainsets and stations shall be designed to permit level platform boarding for passengers and crew at all side entrance doors. Provisions for high level boarding shall be made at all locations in trainset maintenance facilities where crew and maintenance personnel are normally required to access or disembark trainsets.

(e) *Signal and trainset control systems.* (1) The railroad's signal and trainset control systems, shall be based upon the service-proven system utilized on the Tokaido Shinkansen system and shall include an automatic train control (ATC) system, interlocking equipment, and wayside equipment, including: track circuits, transponders, and Go/No-Go signals in stations and trainset maintenance facilities.

(2) The railroad's signaling system shall extend beyond the mainline into trainset maintenance facilities and be

designed to prevent collisions at all speeds.

(3) The ATC system shall be designed with a redundant architecture utilizing an intrinsic fail-safe design concept.

(4) The trainset braking curves shall be determined by the on-board equipment based on the ATC signal from the ground facility and on-board database that includes the alignment and rolling stock performance data. The on-board equipment shall generate the braking command based upon the trainset location, speed, and braking curves.

(5) The ATC on-board equipment shall have three modes: mainline, shunting, and cut-out.

(i) Mainline mode shall be used for operations on mainlines and for entering into the trainset maintenance facilities. The mainline mode of ATC on-board equipment shall provide the following functions:

(A) Prevent train-to-train collisions; and

(B) Prevent overspeed derailments.

(ii) Shunting mode shall be used to protect movements within trainset maintenance facilities and for emergency operations as required by the operating rules. When operating in shunting mode, the trainset shall be restricted to a maximum speed of 30 km/h.

(iii) Cut-out mode shall be used for emergency operations and/or in the event of an ATC system failure as required by the operating rules.

(6) Interlocking equipment shall prevent the movement of trainsets through a switch in an improper position and command switch-and-lock movements on mainlines and within trainset maintenance facilities.

(7) Track circuits shall be used to provide broken rail detection.

(8) Overrun protection coils shall be used at mainline turnouts, crossovers within stations and trainset maintenance facilities to prevent unauthorized route access.

(9) Transponders shall be used on the mainline to provide trainset position correction. Transponders may be used to provide an overlay of overrun protection within a trainset maintenance facility.

(10) Go/No-Go signals shall be used in stations for shunting and emergency operations and in trainset maintenance facilities to provide trainset movement authority.

(11) The railroad shall include an intrusion detection system as required by paragraph (b)(3) and (5) of this section that shall interface with the ATC system and have the capability to stop the trainset under specified intrusion scenarios.

(f) *Communications.* (1) The railroad shall install a dedicated communication system along the right-of-way to transmit data, telephone, and/or radio communications that is completely isolated and independent of the signal and trainset control system. To ensure transmission reliability, the system shall include back-up transmission routes.

(2) For trainset operation and maintenance, the railroad shall install—

(i) A portable radio system for maintenance and service use; and

(ii) A trainset radio, which shall facilitate communication between each trainset and the general control center.

(g) *Rolling stock.* (1) The railroad's rolling stock shall be designed, operated, and maintained in accordance with the requirements set forth in subparts D, E, and G of this part.

(2) The railroad shall utilize bi-directional, fixed-consist, electric multiple unit (EMU), high-speed trainsets based on the N700.

(3) Each trainset shall be equipped with wheel slide control.

(4) Each trainset shall be equipped with two electrically connected pantographs. The position of the pantographs (up or down) shall be displayed in the driver's cab.

(5) The driver's cab shall be a full width and dedicated cab and shall be arranged to enhance safety of operation, range of vision, visibility and readability of controls and indicators, accessibility of controls, and climate control.

(6) The railroad's passenger equipment brake system shall be based on the N700's design and shall meet the following standards:

(i) Each trainset shall be equipped with an electronically controlled brake system that shall ensure that each unit in the trainset responds independently to a brake command. The brake command shall be transmitted through the on-board internal trainset control network, as well as through the trainline for redundancy.

(A) Motorized cars shall be equipped with regenerative and electronically controlled pneumatic brakes. The system shall be designed to maximize the use of regenerative brakes.

(B) Non-motorized cars shall be equipped with electronically controlled pneumatic brakes.

(C) The friction brakes on each bogie shall be cheek mounted disc brakes.

(D) Each car shall be equipped with an electronic and pneumatic brake control unit and a main reservoir. The system shall be designed that in the event of a failure of an electronic control unit in a car, brake control shall be provided by the electronic control unit on the adjacent car. Each car in the trainset shall be equipped with a backup wheel slide protection controller that will provide wheel slide protection in the event of a wheel slide protection controller failure.

(ii) The braking system shall be designed with the following brake controls: Service, emergency, urgent, and rescue brake.

(iii) The service and emergency brake shall be applied automatically by ATC or manually by the driver.

(iv) The urgent brake control shall be independent of the service and emergency brake control and shall be automatically applied if the trainset is parted. Application of the urgent brake shall produce an irretrievable stop. The urgent brake force shall be designed to vary according to speed in order to minimize the braking distance and avoid excessive demand of adhesion at higher speeds.

(v) A disabled trainset shall be capable of having its brake system controlled electronically by a rescue trainset.

(vi) Independent of the driver's brake handle in the cab, each trainset shall be equipped with two urgent brake switches in each cab car, accessible only to the crew; located adjacent to the door control station and that can initiate an urgent brake application. If door control stations are provided in intermediate cars that are accessible only to crew members, then the urgent brake switches must also be included adjacent to the door control stations.

(vii) The railroad shall establish a maximum safe operating speed to address brake failures that occur in revenue service as required by § 299.409(f)(4). In the event of any friction brake failure on a trainset, the speed shall be limited by ATC on-board equipment in accordance with the brake failure switch position selected by the driver and as required by § 299.447.

§ 299.15 Special approvals.

(a) *General.* The following procedures govern consideration and action upon requests for special approval of alternative standards to this part.

(b) *Petitions for special approval of alternative standard.* Each petition for special approval of an alternative standard shall contain—

(1) The name, title, address, and telephone number of the primary person to be contacted with regard to review of the petition;

(2) The alternative proposed, in detail, to be substituted for the particular requirements of this part; and

(3) Appropriate data or analysis, or both, establishing that the alternative will provide at least an equivalent level of safety.

(c) *Petitions for special approval of alternative compliance.* Each petition for special approval of alternative compliance shall contain—

(1) The name, title, address, and telephone number of the primary person to be contacted with regard to the petition;

(2) High-speed core systems and system components of special design shall be deemed to comply with this part, if the FRA Associate Administrator determines under paragraph (d) of this section that the core system or system components provide at least an equivalent level of safety in the environment defined within § 299.13 with respect to the protection of railroad employees and the public. In making a determination under paragraph (d) of this section the Associate Administrator shall consider, as a whole, all of those elements of casualty prevention or mitigation relevant to the integrity of the core system or components that are addressed by the requirements of this part.

(d) *Petition contents.* The Associate Administrator may only make a finding of equivalent safety and compliance with this part, based upon a submission of data and analysis sufficient to support that determination. The petition shall include—

(1) The information required by § 299.15(b) or (c), as appropriate; Information, including detailed drawings and materials specifications, sufficient to describe the actual construction and function of the core systems or system components of special design;

(2) A quantitative risk assessment, incorporating the design information and engineering analysis described in this paragraph, demonstrating that the core systems or system components, as utilized in the service environment defined in § 299.13, presents no greater hazard of serious personal injury than existing core system or system components that conform to the specific requirements of this part.

(e) **Federal Register** *notice.* FRA will publish a notice in the **Federal Register** concerning each petition under paragraphs (b) and (c) of this section.

(f) *Comment.* Not later than 30 days from the date of publication of the notice in the **Federal Register** concerning a petition under paragraphs (b) and (c) of this section, any person may comment on the petition.

(1) Each comment shall set forth specifically the basis upon which it is made, and contain a concise statement of the interest of the commenter in the proceeding.

(2) Each comment shall be submitted to the U.S. Department of Transportation, Docket Operations (M–30), West Building Ground Floor, Room W12–140, 1200 New Jersey Avenue SE, Washington, DC 20590, and shall contain the assigned docket number for that proceeding. The form of such submission may be in written or electronic form consistent with the standards and requirements established by the Federal Docket Management System and posted on its website at *http://www.regulations.gov.*

(g) *Disposition of petitions.* (1) FRA will conduct a hearing on a petition in accordance with the procedures provided in § 211.25 of this chapter.

(2) If FRA finds that the petition complies with the requirements of this section or that the proposed plan is acceptable the petition will be granted, normally within 90 days of its receipt. If the petition is neither granted nor denied within 90 days, the petition remains pending for decision. FRA may attach special conditions to the approval of the petition. Following the approval of a petition, FRA may reopen consideration of the petition for cause stated.

(3) If FRA finds that the petition does not comply with the requirements of this section, or that the proposed plan is not acceptable or that the proposed changes are not justified, or both, the petition will be denied, normally within 90 days of its receipt.

(4) When FRA grants or denies a petition, or reopens consideration of the petition, written notice is sent to the petitioner and other interested parties.

§ 299.17 Incorporation by reference.

Certain material is incorporated by reference into this part with the approval of the Director of the Federal Register under 5 U.S.C. 552(a) and 1 CFR part 51. All approved material is available for inspection at Federal Railroad Administration, Docket Clerk, 1200 New Jersey Avenue SE, Washington, DC 20590 (telephone: 202–493–6052); email: *FRALegal@dot.gov* and is available from the sources indicated in this section. It is also available for inspection at the National Archives and Records Administration (NARA). For information on the availability of this material at NARA, email *fedreg.legal@nara.gov* or go to www.archives.gov/federal-register/cfr/ibr-locations.html.

(a) ASTM International, 100 Barr Harbor Drive, PO Box C700, West Conshohocken, PA 19428–2959, *www.astm.org.*

(1) ASTM D 4956–07$^{\varepsilon 1}$, Standard Specification for Retroreflective Sheeting for Traffic Control, approved March 15, 2007; into § 299.423.

(2) ASTM E 810–03, Standard Test Method for Coefficient of Retroreflection of Retroreflective Sheeting Utilizing the Coplanar Geometry, approved February 10, 2003; into § 299.423.

(3) ASTM E 2073–07, Standard Test Method for Photopic Luminance of Photoluminescent (Phosphorescent) Markings, approved July 1, 2007; into § 299.423.

(b) Japanese Standards Association 3–13–12 Mita, Minato-ku, Tokyo, 108–0073, Japan, *www.jsa.or.jp* (Japanese site), or *www.jsa.or.jp/en* (English site).

(1) JIS B 8265:2010(E) ''Construction of pressure vessels-general principles,'' Published December 27, 2010, Second English edition, published December 2013; into § 299.409.

(2) JIS E 1101:2001(E), ''Flat bottom railway rails and special rails for switches and crossings of non-treated steel,'' Published March 21, 2001, Second English edition, published August 2008; into § 299.13(d).

(3) JIS E 1101:2006(E) ''Flat bottom railway rails and special rails for switches and crossings of non-treated steel,'' (Amendment 1), Published March 27, 2006, First English edition, published December 2006; into § 299.13(d).

(4) JIS E 1101:2012(E) ''Flat bottom railway rails and special rails for switches and crossings of non-treated steel,'' (Amendment 2), Published February 20, 2012, First English edition, May 2012; into § 299.13(d).

(5) JIS E 7105:2006(E), ''Rolling Stock—Test methods of static load for body structures,'' Published February 6, 2006, First English edition published May 2010; into § 299.403(b).

(6) JIS E 7105:2011(E), ''Rolling Stock—Test methods of static load for body structures,'' (Amendment 1) Published September 7, 2011, First English edition, published December 2011; into § 299.403(b).

Subpart B—Signal and Trainset Control System

§ 299.201 Technical PTC system requirements.

(a) The railroad shall comply with all applicable requirements under 49 U.S.C. 20157, including, but not limited to, the statutory requirement to fully implement an FRA-certified PTC system prior to commencing revenue service.

(b) The railroad's PTC system shall be designed to prevent train-to-train

collisions, over-speed derailments, incursions into established work zone limits, and movements of trainset through switches left in the wrong position, reliably and functionally, in accordance with § 236.1005(a) and (c) through (f) of this chapter.

(c) The railroad is authorized to conduct field testing of its PTC system on its system, prior to obtaining PTC System Certification from FRA, in accordance with its system-wide qualification test plan under § 299.603. During any field testing of its uncertified PTC system and regression testing of its FRA-certified PTC system, FRA may oversee the railroad's testing, audit any applicable test plans and procedures, and impose additional testing conditions that FRA believes may be necessary for the safety of trainset operations.

(d) The railroad is not exempted from compliance with any requirement of subparts A through G of 49 CFR part 236, or 49 CFR parts 233 and 235, unless the railroad's FRA-approved PTCSP provides for such an exemption.

(e)(1) All materials filed in accordance with this subpart must be in the English language, or have been translated into English and attested as true and correct.

(2) Each filing referenced in this subpart may include a request for full or partial confidentiality in accordance with § 209.11 of this chapter. If confidentiality is requested as to a portion of any applicable document, then in addition to the filing requirements under § 209.11 of this chapter, the person filing the document shall also file a copy of the original unredacted document, marked to indicate which portions are redacted in the document's confidential version without obscuring the original document's contents.

§ 299.203 PTC system required.

The railroad shall not commence revenue service prior to installing and making operative its FRA-certified PTC system.

§ 299.205 PTC System Certification.

(a) Prior to operating its PTC system in revenue service, the railroad must first obtain a PTC System Certification from FRA by submitting an acceptable PTCSP and obtaining FRA's approval of its PTCSP.

(b) Each PTCSP requirement under this subpart shall be supported by information and analysis sufficient to establish that the PTC system meets the requirements of § 236.1005(a) and (c) through (f) of this chapter.

(c) If the Associate Administrator finds that the PTCSP and its supporting documentation support a finding that the PTC system complies with § 236.1005(a) and (c) through (f) of this chapter and § 299.211, the Associate Administrator shall approve the PTCSP. If the Associate Administrator approves the PTCSP, the railroad shall receive PTC System Certification for its PTC system and shall implement the PTC system according to the PTCSP.

(d) Issuance of a PTC System Certification is contingent upon FRA's confidence in the implementation and operation of the subject PTC system. This confidence may be based on FRA-monitored field testing or an independent assessment performed in accordance with § 236.1017 of this chapter.

(e)(1) As necessary to ensure safety, FRA may attach special conditions to its certification of the railroad's PTC System.

(2) After granting a PTC System Certification, FRA may reconsider the PTC System Certification upon revelation of any of the following factors concerning the contents of the PTCSP:

(i) Potential error or fraud;

(ii) Potentially invalidated assumptions determined as a result of in-service experience or one or more unsafe events calling into question the safety analysis supporting the approval.

(3) During FRA's reconsideration in accordance with this paragraph, the PTC system may remain in use if otherwise consistent with the applicable law and regulations, and FRA may impose special conditions for use of the PTC system.

(4) After FRA's reconsideration in accordance with this paragraph, FRA may:

(i) Dismiss its reconsideration and continue to recognize the existing PTC System Certification;

(ii) Allow continued operations under such conditions the Associate Administrator deems necessary to ensure safety; or

(iii) Revoke the PTC System Certification and direct the railroad to cease operations.

(f) FRA shall be afforded reasonable access to monitor, test, and inspect processes, procedures, facilities, documents, records, design and testing materials, artifacts, training materials and programs, and any other information used in the design, development, manufacture, test, implementation, and operation of the system, as well as interview any personnel.

(g) Information that has been certified under the auspices of a foreign regulatory entity recognized by the Associate Administrator may, at the Associate Administrator's sole discretion, be accepted as independently verified and validated and used to support the railroad's PTCSP.

(h) The railroad shall file its PTCSP in FRA's Secure Information Repository at *https://sir.fra.dot.gov,* consistent with § 299.201(e).

§ 299.207 PTC Safety Plan content requirements.

(a) The railroad's PTCSP shall contain the following elements:

(1) A hazard log consisting of a comprehensive description of all safety-relevant hazards of the PTC system, specific to implementation on the railroad, including maximum threshold limits for each hazard (for unidentified hazards, the threshold shall be exceeded at one occurrence);

(2) A description of the safety assurance concepts that are to be used for system development, including an explanation of the design principles and assumptions;

(3) A risk assessment of the as-built PTC system;

(4) A hazard mitigation analysis, including a complete and comprehensive description of each hazard and the mitigation techniques used;

(5) A complete description of the safety assessment and Verification and Validation processes applied to the PTC system, their results, and whether these processes address the safety principles described in appendix C to part 236 of this chapter directly, using other safety criteria, or not at all;

(6) A complete description of the railroad's training plan for railroad, and contractor employees and supervisors necessary to ensure safe and proper installation, implementation, operation, maintenance, repair, inspection, testing, and modification of the PTC system;

(7) A complete description of the specific procedures and test equipment necessary to ensure the safe and proper installation, implementation, operation, maintenance, repair, inspection, testing, and modification of the PTC system on the railroad and establish safety-critical hazards are appropriately mitigated. These procedures, including calibration requirements, shall be consistent with or explain deviations from the equipment manufacturer's recommendations;

(8) A complete description of the configuration or revision control measures designed to ensure that the railroad or its contractor does not adversely affect the safety-functional requirements and that safety-critical hazard mitigation processes are not

compromised as a result of any such change;

(9) A complete description of all initial implementation testing procedures necessary to establish that safety-functional requirements are met and safety-critical hazards are appropriately mitigated;

(10) A complete description of all post-implementation testing (validation) and monitoring procedures, including the intervals necessary to establish that safety-functional requirements, safety-critical hazard mitigation processes, and safety-critical tolerances are not compromised over time, through use, or after maintenance (adjustment, repair, or replacement) is performed;

(11) A complete description of each record necessary to ensure the safety of the system that is associated with periodic maintenance, inspections, tests, adjustments, repairs, or replacements, and the system's resulting conditions, including records of component failures resulting in safety-relevant hazards (*see* § 299.213);

(12) A safety analysis to determine whether, when the system is in operation, any risk remains of an unintended incursion into a roadway work zone due to human error. If the analysis reveals any such risk, the PTCSP shall describe how that risk will be mitigated;

(13) A complete description of how the PTC system will enforce authorities and signal indications;

(14) A complete description of how the PTC system will appropriately and timely enforce all integrated hazard detectors in accordance with § 236.1005 of this chapter;

(15) The documents and information required under § 299.211;

(16) A summary of the process for the product supplier or vendor to promptly and thoroughly report any safety-relevant failures or previously unidentified hazards to the railroad, including when another user of the product experiences a safety-relevant failure or discovers a previously unidentified hazard;

(17) Documentation establishing—by design, data, or other analysis—that the PTC system meets the fail-safe operation criteria under paragraph (b)(4)(v) of appendix C to part 236 of this chapter; and,

(18) An analysis establishing that the PTC system will be operated at a level of safety comparable to that achieved over the 5-year period prior to the submission of the railroad's PTCSP by other train control systems that perform PTC functions, and which have been utilized on high-speed rail systems with similar technical and operational characteristics in the United States or in foreign service.

(b) As the railroad's PTC system may be considered a standalone system pursuant to § 236.1015(e)(3) of this chapter, the following requirements apply:

(1) The PTC system shall reliably execute the functions required by § 236.1005 of this chapter and be demonstrated to do so to FRA's satisfaction; and

(2) The railroad's PTCSP shall establish, with a high degree of confidence, that the system will not introduce any hazards that have not been sufficiently mitigated.

(c) When determining whether the PTCSP fulfills the requirements under this section, the Associate Administrator may consider all available evidence concerning the reliability of the proposed system.

(d) When reviewing the issue of the potential data errors (for example, errors arising from data supplied from other business systems needed to execute the braking algorithm, survey data needed for location determination, or mandatory directives issued through the computer-aided dispatching system), the PTCSP must include a careful identification of each of the risks and a discussion of each applicable mitigation. In an appropriate case, such as a case in which the residual risk after mitigation is substantial, the Associate Administrator may require submission of a quantitative risk assessment addressing these potential errors.

(e) The railroad must comply with the applicable requirements under § 236.1021 of this chapter prior to modifying a safety-critical element of an FRA-certified PTC system.

(f) If a PTCSP applies to a PTC system designed to replace an existing certified PTC system, the PTCSP will be approved provided that the PTCSP establishes with a high degree of confidence that the new PTC system will provide a level of safety not less than the level of safety provided by the system to be replaced.

§ 299.209 PTC system use and failures.

(a) When any safety-critical PTC system component fails to perform its intended function, the cause must be determined and the faulty component adjusted, repaired, or replaced without undue delay. Until repair of such essential components is completed, the railroad shall take appropriate action as specified in its PTCSP.

(b) Where a trainset that is operating in, or is to be operated within, a PTC-equipped track segment experiences a PTC system failure or the PTC system is otherwise cut out while en route (*i.e.,* after the trainset has departed its initial terminal), the trainset may only continue in accordance with all of the following:

(1) Except as provided in paragraph (b)(4) of this section, when no absolute block protection is established, the trainset may proceed at a speed not to exceed restricted speed.

(2) When absolute block protection can be established in advance of the trainset, the trainset may proceed at a speed not to exceed 120 km/h (75 mph), and the trainset shall not exceed restricted speed until the absolute block in advance of the trainset is established.

(3) A report of the failure or cut-out must be made to a designated railroad officer of the railroad as soon as safe and practicable.

(4) Where the PTC system is the exclusive method of delivering mandatory directives, an absolute block must be established in advance of the trainset as soon as safe and practicable, and the trainset shall not exceed restricted speed until the absolute block in advance of the trainset is established.

(5) Where the failure or cut-out is a result of a defective onboard PTC apparatus, the trainset may be moved in passenger service only to the next forward location where the necessary repairs can be made; however, if the next forward location where the necessary repairs can be made does not have the facilities to handle the safe unloading of passengers, the trainset may be moved past the repair location in service only to the next forward passenger station in order to facilitate the unloading of passengers. When the passengers have been safely unloaded, the defective trainset shall be moved to the nearest location where the onboard PTC apparatus can be repaired or exchanged.

(c) The railroad shall comply with all provisions in its PTCSP for each PTC system it uses and shall operate within the scope of initial operational assumptions and predefined changes identified.

(d) The normal functioning of any safety-critical PTC system must not be interfered with in testing or otherwise without first taking measures to provide for the safe movement of trainsets that depend on the normal functioning of the system.

(e) The railroad shall comply with the reporting requirements under § 236.1029(h) of this chapter.

(f) The railroad and the PTC system vendors and/or suppliers must comply with each applicable requirement under § 236.1023 of this chapter.

§ 299.211 Communications and security requirements.

(a) All wireless communications between the office, wayside, and onboard components in a PTC system shall provide cryptographic message integrity and authentication.

(b) Cryptographic keys required under this section shall—

(1) Use an algorithm approved by the National Institute of Standards or a similarly recognized and FRA-approved standards body;

(2) Be distributed using manual or automated methods, or a combination of both; and

(3) Be revoked—

(i) If compromised by unauthorized disclosure of the cleartext key; or

(ii) When the key algorithm reaches its lifespan as defined by the standards body responsible for approval of the algorithm.

(c) The cleartext form of the cryptographic keys shall be protected from unauthorized disclosure, modification, or substitution, except during key entry when the cleartext keys and key components may be temporarily displayed to allow visual verification. When encrypted keys or key components are entered, the cryptographically protected cleartext key or key components shall not be displayed.

(d) Access to cleartext keys shall be protected by a tamper-resistant mechanism.

(e) If the railroad elects to also provide cryptographic message confidentiality, it shall:

(1) Comply with the same requirements for message integrity and authentication under this section; and

(2) Only use keys meeting or exceeding the security strength required to protect the data as defined in the railroad's PTCSP.

(f) The railroad, or its vendor or supplier, shall have a prioritized service restoration and mitigation plan for scheduled and unscheduled interruptions of service. This plan shall be made available to FRA upon request, without undue delay, for restoration of communication services that support PTC system services.

§ 299.213 Records retention.

(a) The railroad shall maintain at a designated office on the railroad—

(1) A current copy of each FRA-approved PTCSP that it holds;

(2) Adequate documentation to demonstrate that the PTCSP meets the safety requirements of this RPA, including the risk assessment;

(3) An Operations and Maintenance Manual, pursuant to § 299.215; and

(4) Training and testing records pursuant to § 236.1043(b) of this chapter.

(b) Results of inspections and tests specified in the PTCSP must be recorded pursuant to § 236.110 of this chapter.

(c) Each contractor providing services relating to the testing, maintenance, or operation of the railroad's PTC system shall maintain at a designated office training records required under §§ 236.1043(b) of this chapter, and 299.207(a)(6).

(d) After the PTC system is placed in service, the railroad shall maintain a database of all safety-relevant hazards as set forth in its PTCSP and those that had not been previously identified in its PTCSP. If the frequency of the safety-relevant hazards exceeds the threshold set forth in its PTCSP, then the railroad shall—

(1) Report the inconsistency in writing to FRA's Secure Information Repository at *https://sir.fra.dot.gov,* within 15 days of discovery;

(2) Take prompt countermeasures to reduce the frequency of each safety-relevant hazard to below the threshold set forth in its PTCSP; and

(3) Provide a final report when the inconsistency is resolved to FRA's Secure Information Repository at *https://sir.fra.dot.gov,* on the results of the analysis and countermeasures taken to reduce the frequency of the safety-relevant hazard(s) below the threshold set forth in its PTCSP.

§ 299.215 Operations and Maintenance Manual.

(a) The railroad shall catalog and maintain all documents as specified in its PTCSP for the operation, installation, maintenance, repair, modification, inspection, and testing of the PTC system and have them in one Operations and Maintenance Manual, readily available to persons required to perform such tasks and for inspection by FRA and FRA-certified state inspectors.

(b) Plans required for proper maintenance, repair, inspection, and testing of safety-critical PTC systems must be adequate in detail and must be made available for inspection by FRA and FRA-certified state inspectors where such PTC systems are deployed or maintained. They must identify all software versions, revisions, and revision dates. Plans must be legible and correct.

(c) Hardware, software, and firmware revisions must be documented in the Operations and Maintenance Manual according to the railroad's configuration management control plan and any additional configuration/revision control measures specified in its PTCSP.

(d) Safety-critical components, including spare equipment, must be positively identified, handled, replaced, and repaired in accordance with the procedures specified in the railroad's PTCSP.

(e) The railroad shall designate in its Operations and Maintenance Manual an appropriate railroad officer responsible for issues relating to scheduled interruptions of service.

Subpart C—Track Safety Standards

§ 299.301 Restoration or renewal of track under traffic conditions.

(a) Restoration or renewal of track, other than in yards and trainset maintenance facilities, under traffic conditions is prohibited.

(b) Restoration or renewal of track under traffic conditions on track Class H2 in trainset maintenance facilities is limited to the replacement of worn, broken, or missing components or fastenings that do not affect the safe passage of trainset.

(c) The following activities are expressly prohibited on track Class H2 in trainset maintenance facilities under traffic conditions:

(1) Any work that interrupts rail continuity, *e.g.,* as in joint bar replacement or rail replacement;

(2) Any work that adversely affects the lateral or vertical stability of the track with the exception of spot tamping an isolated condition where not more than 4.5 m (15 feet) of track are involved at any one time and the ambient air temperature is not above 35°C (95°F); and

(3) Removal and replacement of the rail fastenings on more than one tie at a time within 4.5 m (15 feet).

§ 299.303 Measuring track not under load.

When unloaded track is measured to determine compliance with requirements of this part, evidence of rail movement, if any, that occurs while the track is loaded shall be added to the measurements of the unloaded track.

§ 299.305 Drainage.

Each drainage or other water carrying facility under or immediately adjacent to the roadbed shall be maintained and kept free of obstruction, to accommodate expected water flow for the area concerned.

§ 299.307 Vegetation.

Vegetation on railroad property which is on or immediately adjacent to roadbed shall be controlled so that it does not—

(a) Become a fire hazard to track-carrying structures;

(b) Obstruct visibility of railroad signs and signals along the right-of-way;

(c) Interfere with railroad employees performing normal trackside duties;

(d) Prevent proper functioning of signal and communication lines; or

(e) Prevent railroad employees from visually inspecting moving equipment from their normal duty stations.

§ 299.309 Classes of track: operating speed limits.

(a) Except as provided in paragraph (b) of this section and as otherwise provided in this part, the following maximum allowable operating speeds apply—

TABLE 1 TO PARAGRAPH (a)

Over track that meets all of the requirements prescribed in this part for—	The maximum allowable operating speed in km/h (mph)
Class H0 track	20 (12)
Class H1 track	30 (19)

TABLE 1 TO PARAGRAPH (a)—Continued

Over track that meets all of the requirements prescribed in this part for—	The maximum allowable operating speed in km/h (mph)
Class H2 track	70 (44)
Class H3 track	120 (75)
Class H4 track	170 (106)
Class H5 track	230 (143)
Class H6 track	285 (177)
Class H7 track	330 (205)

(b) Except as provided in paragraph (c) of this section, if a segment of track does not meet all of the requirements for its intended Class, it is to be reclassified to the next lower track Class for which it does meet all of the requirements of this part. However, if the segment of track does not at least meet the requirements for track Class H1 track, operations may continue at Class H1 speeds for a period of not more than 30 days without bringing the track into compliance, under the authority of an individual designated under § 299.353, after that individual determines that operations may safely continue and subject to any limiting conditions specified by such individual.

(c) If a segment of track designated as track Class H0 does not meet all of the requirements for its intended class, operations may continue at Class H0 speeds for a period of not more than 30 days without bringing the track into compliance, under the authority of an individual designated under § 299.353, after that individual determines that operations may safely continue and subject to any limiting conditions specified by such individual.

(d) No high-speed passenger trainset shall operate over track Class H0.

§ 299.311 Track geometry; general.

If the values listed in the following table are exceeded, the railroad shall initiate remedial action. A reduction in operating speed so that the condition complies with the limits listed for a lower speed shall constitute bringing the track into compliance.

TABLE 1 TO § 299.311

Track geometry parameter (millimeter (mm))	Track class	H0	H1	H2	H3	H4	H5	H6	H7
Gauge is measured between the heads of the rails at right angles to the rails in a plane 14 mm (0.55 inches) below the top of the rail head and may not exceed—.	Min.	1429	1429	1429	1429	1429	1429	1429	1429
	Max.	1454	1454	1454	1454	1454	1454	1454	1454
The deviation from uniformity[1] of the mid-chord offset on either rail for a 10 meter (m) chord (alignment) may not be more than—.	10 m chord	38	31	31	14	12	10	8	7
The deviation from uniform profile on either rail at the mid-ordinate of a 10 m chord (surface) may not be more than—.	10 m chord	40	40	40	27	22	18	15	13
The deviation from uniform crosslevel at any point on tangent and curved track may not be more than—.	.....	50	26	26	22	18	14	9	9
The difference in crosslevel between any two points 2.5 meters (8.2 feet) apart (twist) may not be more than—.	2.5 m	26	26	26	22	18	14	9	9

[1] Uniformity for alignment at any point along the track is established by averaging the measured mid-chord offset values for a 10 m (32.8 feet) chord for nine consecutive points that are centered around that point and spaced at 2.5 m (8.2 feet) intervals.

§ 299.313 Track geometry; performance based.

(a) For all track of Class H4 and above, vibration in the lateral and vertical directions measured on the carbody of a vehicle representative of the service fleet traveling at a speed no less than 10 km/h (6.2 mph) below the maximum speed permitted for the class of track, shall not exceed the limits prescribed in the following table:

TABLE 1 TO PARAGRAPH (a)

Carbody acceleration limits[1 2]	
Lateral vibration[3]	Vertical vibration[3]
≤ 0.35 g peak-to-peak 1 sec window ..... excluding peaks < 50 msec.	≤ 0.45g peak-to-peak 1 sec window excluding peaks < 50 msec

[1] Carbody accelerations in the vertical and lateral directions shall be measured by accelerometers oriented and located in accordance with § 299.337(c)(3).

[2] Acceleration measurements shall be processed through an LPF with a minimum cut-off frequency of 10 Hz. The sample rate for acceleration data shall be at least 200 samples per second.

[3] Peak-to-peak accelerations shall be measured as the algebraic difference between the two extreme values of measured acceleration in any 1-second time period, excluding any peak lasting less than 50 milliseconds.

(b) If the carbody acceleration requirements are not met on a segment of track, the segment of track is to be reclassified to the next lower Class of track for which it does meet the requirements of this part.

§ 299.315 Curves; elevation and speed limitations.

(a) The maximum elevation of the outside rail of a curve may not be more than 200 mm (7-7/8 inches). The outside rail of a curve may not be lower than the inside rail by design, except when engineered to address specific track or operating conditions; the limits in § 299.311 apply in all cases.

(b) The maximum allowable posted timetable operating speed for each curve is determined by the following formula:

$$V_{\max} = \sqrt{\frac{(E_a + E_u)xR}{11.8}}$$

Where—

V_{max} = Maximum allowable posted timetable operating speed (km/h).

E_a = Actual elevation of the outside rail (mm). Actual elevation, E_a, for each 50-meter track segment in the body of the curve is determined by averaging the elevation for 11 points through the segment at 5-meter spacing. If the curve length is less than 50-meters, average the points through the full length of the body of the curve.

E_u = Qualified cant deficiency (mm) of the vehicle type.

R = Radius of curve (m). Radius of curve, R, is determined by averaging the radius of the curve over the same track segment as the elevation.

(c) All vehicles are considered qualified for operating on track with a cant deficiency, E_u, not exceeding 75 mm (3 inches).

(d) Each vehicle type must be approved by FRA, under § 299.609, to operate on track with a qualified cant deficiency, E_u, greater than 75 mm (3 inches). Each vehicle type must demonstrate in a ready-for-service load condition, compliance with the requirements of either paragraph (d)(1) or (2) of this section.

(1) When positioned on a track with a uniform superelevation equal to the proposed cant deficiency:

(i) No wheel of the vehicle unloads to a value less than 60 percent of its static value on perfectly level track; and

(ii) For passenger cars, the roll angle between the floor of the equipment and the horizontal does not exceed 8.6 degrees; or

(2) When operating through a constant radius curve at a constant speed corresponding to the proposed cant deficiency, and a test plan is submitted and approved by FRA in accordance with § 299.609(d)—

(i) The steady-state (average) load on any wheel, throughout the body of the curve, is not less than 60 percent of its static value on perfectly level track; and

(ii) For passenger cars, the steady-state (average) lateral acceleration measured on the floor of the carbody does not exceed 0.15g.

(e) The railroad shall transmit the results of the testing specified in paragraph (d) of this section to FRA in accordance with §§ 299.9 and 299.613 requesting approval under § 299.609(g) for the vehicle type to operate at the desired curving speeds allowed under the formula in paragraph (b) of this section. The request shall be made in writing and shall contain, at a minimum, the following information:

(1) A description of the vehicle type involved, including schematic diagrams of the suspension system(s) and the estimated location of the center of gravity above top of rail; and

(2) The test procedure, including the load condition under which the testing was performed, and description of the instrumentation used to qualify the vehicle type, as well as the maximum values for wheel unloading and roll angles or accelerations that were observed during testing.

Note 1 to paragraph (e)(2). The test procedure may be conducted whereby all the wheels on one side (right or left) of the vehicle are raised to the proposed cant deficiency and lowered, and then the vertical wheel loads under each wheel are measured and a level is used to record the angle through which the floor of the vehicle has been rotated.

(f) Upon FRA approval of the request to approve the vehicle type to operate at the desired curving speeds allowed under the formula in paragraph (b) of this section, the railroad shall notify FRA in accordance with § 299.9 in writing no less than 30 calendar days prior to the proposed implementation of the approved higher curving speeds allowed under the formula in paragraph (b) of this section. The notification shall contain, at a minimum, identification of the track segment(s) on which the higher curving speeds are to be implemented.

(g) As used in this section, and § 299.609, vehicle type means like vehicles with variations in their physical properties, such as suspension, mass, interior arrangements, and dimensions that do not result in significant changes to their dynamic characteristics.

§ 299.317 Track strength.

(a) Track shall have a sufficient vertical strength to withstand the maximum vehicle loads generated at maximum permissible trainset speeds, cant deficiencies and surface limitations. For purposes of this section, vertical track strength is defined as the track capacity to constrain vertical deformations so that the track shall, under maximum load, remain in compliance with the track performance and geometry requirements of this part.

(b) Track shall have sufficient lateral strength to withstand the maximum thermal and vehicle loads generated at maximum permissible trainset speeds, cant deficiencies and lateral alignment limitations. For purposes of this section lateral track strength is defined as the track capacity to constrain lateral deformations so that track shall, under maximum load, remain in compliance with the track performance and geometry requirements of this part.

§ 299.319 Track fixation and support.

(a) Crossties, if used shall be of concrete or composite construction, unless otherwise approved by FRA under § 299.15, for all tracks over which trainsets run in revenue service.

(b) Each 25 m (82 feet) segment of track that contains crossties shall have—

(1) A sufficient number of crossties to provide effective support that will—

(i) Hold gauge within limits prescribed in § 299.311;

(ii) Maintain surface within the limits prescribed in § 299.311;

(iii) Maintain alignment within the limits prescribed in § 299.311; and

(iv) Maintain longitudinal rail restraint.

(2) The minimum number and type of crossties specified in paragraph (b)(4) of this section and described in paragraph (c) or (d) of this section, as applicable, effectively distributed to support the entire segment;

(3) At least one non-defective crosstie of the type specified in paragraphs (c) and (d) of this section that is located at a joint location as specified in paragraph (e) of this section; and

(4) The minimum number of crossties as indicated in the following table:

TABLE 1 TO PARAGRAPH (b)(4)

Minimum number of non-defective crossties			
Track class	Other than on non-ballasted bridge & turnout	Non-ballasted bridge	Turnout
H0	20	26	24
H1	28	36	33
H2	31, unless inside a TMF, then 28	36	33
H3	35	40	37
H4–H7	39	45	41

(c) Crossties, other than concrete, counted to satisfy the requirements set forth in paragraph (b)(4) of this section shall not be—

(1) Broken through;

(2) Split or otherwise impaired to the extent the crossties will allow the ballast to work through, or will not hold spikes or rail fasteners;

(3) Deteriorated so that the tie plate or base of rail can move laterally 9.5 mm (3/8 inch) relative to the crossties;

(4) Cut by the tie plate through more than 40 percent of a crosstie's thickness;

(5) Configured with less than 2 rail holding spikes or fasteners per tie plate; or

(6) Unable, due to insufficient fastener toeload, to maintain longitudinal restraint and maintain rail hold down and gauge.

(d) Concrete crossties counted to satisfy the requirements set forth in paragraph (b)(4) of this section shall not be—

(1) Broken through or deteriorated to the extent that prestressing material is visible;

(2) Deteriorated or broken off in the vicinity of the shoulder or insert so that the fastener assembly can either pull out or move laterally more than 9.5 mm (3/8 inch) relative to the crosstie;

(3) Deteriorated such that the base of either rail can move laterally more than 9.5 mm (3/8 inch) relative to the crosstie;

(4) Deteriorated so that rail seat abrasion is sufficiently deep so as to cause loss of rail fastener toeload;

(5) Deteriorated such that the crosstie's fastening or anchoring system is unable to maintain longitudinal rail restraint, or maintain rail hold down, or maintain gauge due to insufficient fastener toeload; or

(6) Configured with less than two fasteners on the same rail.

(e) Classes H0 and H1 track shall have one crosstie whose centerline is within 0.61 m (24 inches) of each rail joint (end) location. Classes H2 and H3 track shall have one crosstie whose centerline is within 0.46 m (18 inches) of each rail joint (end) location. Classes H4–H7 track shall have one crosstie whose centerline is within 0.32 m (12.6 inches) of each rail joint (end) location. The relative position of these crossties is described in the following three diagrams:

(1) Each rail joint in Classes H0 and H1 track shall be supported by at least one crosstie specified in paragraphs (c) and (d) of this section whose centerline is within 1.22 m (48 inches) as shown in Figure 1 to this paragraph.

Figure 1 to paragraph (e)(1) - Classes H0 and H1

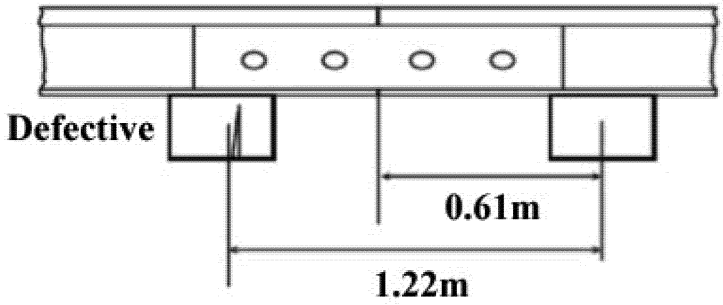

(2) Each rail joint in Classes H2 and H3 track shall be supported by at least one crosstie specified in paragraphs (c) and (d) of this section whose centerline is within 0.92 m (36.2 inches) as shown in Figure 2 to this paragraph.

Figure 2 to paragraph (e)(2) - Classes H2 and H3

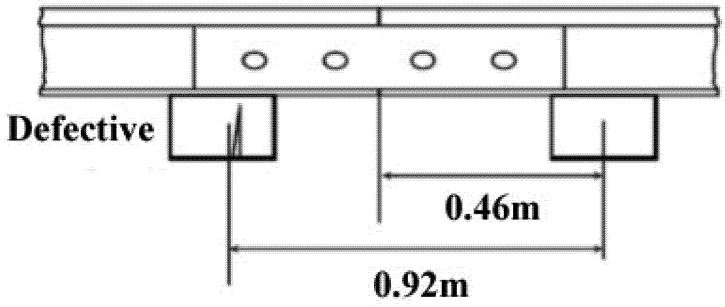

(3) Each rail joint in Classes H4–H7 track shall be supported by at least one crosstie specified in paragraphs (c) and (d) of this section whose centerline is within 0.64 m (25.2 inches) as shown in Figure 3 to this paragraph.

Figure 3 to paragraph (e)(3) - Classes H4 - H7

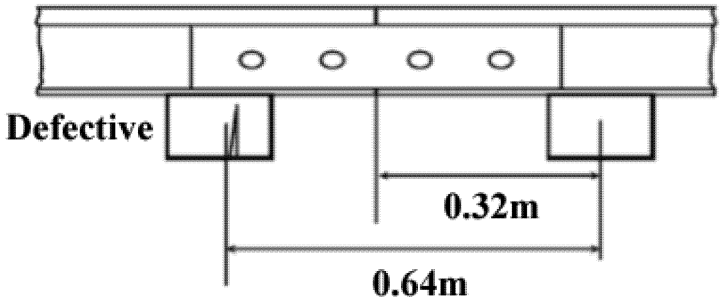

(f) In Class H3 track there shall be at least two non-defective ties each side of a defective tie.

(g) In Classes H4 to H7 track and at any expansion joints there shall be at least three non-defective ties each side of a defective tie.

(h) Defective ties shall be replaced in accordance with the railroad's inspection, testing, and maintenance program.

(i) Track shall be fastened by a system of components that effectively maintains gauge within the limits prescribed in § 299.311. Each component of each such system shall be evaluated to determine whether gauge is effectively being maintained.

(j) For track constructed without crossties, such as slab track and track connected directly to bridge structural components, track over servicing pits, etc., the track structure shall be sufficient to maintain the geometry limits specified in § 299.311.

§ 299.321 Defective rails.

(a) The railroad's inspection, testing, and maintenance program shall include a description of defective rails consistent with the practice on the Tokaido Shinkansen system. The inspection, testing, and maintenance program shall include identification of rail defect types, definition of the inspection criteria, time required for verification and the corresponding remedial action.

(b) When the railroad learns that a rail in that track contains any of the defects listed in the railroad's inspection, testing, and maintenance program, a person designated under § 299.353 or § 299.355 shall determine whether the track may continue in use. If the designated person determines that the track may continue in use, operation over the defective rail is not permitted until—

(1) The rail is replaced or repaired; or

(2) The remedial action prescribed in the inspection, testing, and maintenance program is initiated.

§ 299.323 Continuous welded rail (CWR) plan.

(a) The railroad shall have in effect and comply with a plan that contains written procedures which address: The installation, adjustment, maintenance, and inspection of CWR; and inspection of CWR joints.

(b) The railroad shall file its CWR plan with FRA pursuant to § 299.9. The initial CWR plan shall be filed 60 days prior to installation of any CWR track. The effective date of the plan is the date the plan is filed with FRA.

(c) The railroad's existing plan shall remain in effect until the railroad's new plan is developed and filed with FRA.

§ 299.325 Continuous welded rail (CWR); general.

The railroad shall comply with the contents of the CWR plan developed under § 299.323. The plan shall contain the following elements—

(a) Procedures for the installation and adjustment of CWR which include—

(1) Designation of a desired rail installation temperature range for the geographic area in which the CWR is located;

(2) De-stressing procedures/methods which address proper attainment of the desired rail installation temperature range when adjusting CWR; and

(3) Glued insulated or expansion joint installation and maintenance procedures.

(b) Rail anchoring, if used, or fastening requirements that will provide sufficient restraint to limit longitudinal rail and crosstie movement to the extent practical, and that specifically address

CWR rail anchoring or fastening patterns on bridges, bridge approaches, and at other locations where possible longitudinal rail and crosstie movement associated with normally expected trainset-induced forces—is restricted.

(c) CWR joint installation and maintenance procedures.

(d) Procedures which specifically address maintaining a desired rail installation temperature range when cutting CWR including rail repairs, in-track welding, and in conjunction with adjustments made in the area of tight track, a track buckle, or a pull-apart.

(e) Procedures which control trainset speed on CWR track when—

(1) Maintenance work, track rehabilitation, track construction, or any other event occurs which disturbs the roadbed or ballast section and reduces the lateral or longitudinal resistance of the track; and

(2) The difference between the rail temperature and the rail neutral temperature is in a range that causes buckling-prone conditions to be present at a specific location.

(f) Procedures which prescribe when and where physical track inspections are to be performed under extreme temperature conditions.

(g) Scheduling and procedures for inspections to detect cracks and other indications of potential failures in CWR joints.

(h) The railroad shall have in effect a comprehensive training program for the application of these written CWR procedures, with provisions for periodic retraining for those individuals designated as qualified in accordance with this subpart to supervise the installation, adjustment, and maintenance of CWR track and to perform inspections of CWR track.

(i) The plan shall prescribe and require compliance with recordkeeping requirements necessary to provide an adequate history of track constructed with CWR. At a minimum, these records shall include—

(1) The rail laying temperature, location, and date of CWR installations. Each record shall be retained until the rail neutral temperature has been adjusted; and

(2) A record of any CWR installation or maintenance work that does not conform to the written procedures. Such record must include the location of the rail and be maintained until the CWR is brought into conformance with such procedures.

§ 299.327 Rail end mismatch.

Any mismatch of rails at joints may not be more than that prescribed by the following table:

TABLE 1 TO § 299.327

Track class	Any mismatch of rails at joints may not be more than the following:	
	On the tread of the rail ends (mm)	On the gauge side of the rail ends (mm)
H0	6	5
H1–H2	4	4
H3–H7	2	2

§ 299.329 Rail joints and torch cut rails.

(a) Each rail joint, insulated joint, expansion joint, and compromise joint shall be of a structurally sound design and appropriate dimensions for the rail on which it is applied.

(b) If a joint bar is cracked, broken, or permits excessive vertical movement of either rail when all bolts are tight, it shall be replaced.

(c) Except for glued-insulated joints, each joint bar shall be held in position by track bolts tightened to allow the joint bar to firmly support the abutting rail ends. For track Classes H0 to H3 track bolts shall be tightened, as required, to allow longitudinal movement of the rail in the joint to accommodate expansion and contraction due to temperature variations.

(d) Except as provided in paragraph (e) of this section, each rail shall be bolted with at least two bolts at each joint.

(e) Clamped joint bars may be used for temporary repair during emergency situations, and speed over that rail end and the time required to replace the joint bar must not exceed the limits specified in the inspection, testing, and maintenance program.

(f) No rail shall have a bolt hole which is torch cut or burned.

(g) No joint bar shall be reconfigured by torch cutting.

(h) No rail having a torch cut or flame cut end may be used.

§ 299.331 Turnouts and crossings generally.

(a) In turnouts and track crossings, the fastenings shall be intact and maintained to keep the components securely in place. Also, each switch, frog, and guard rail shall be kept free of obstructions that may interfere with the passage of wheels. Use of rigid rail crossings at grade is limited to track Classes H0, H1, and H2.

(b) The track through and on each side of track crossings and turnouts shall be designed to restrain rail movement affecting the position of switch points and frogs.

(c) Each flangeway at turnouts shall be at least 39 mm (1.5 inches) wide.

(d) For all turnouts and track crossings, the railroad shall prepare inspection and maintenance requirements to be included in the railroad's inspection, testing, and maintenance program.

§ 299.333 Frog guard rails and guard faces; gauge.

The guard check and guard face gages in frogs shall be within the limits prescribed in the following table:

TABLE 1 TO § 299.333

Track class	Guard check gage The distance between the gauge line of a frog to the guard line [1] of its guard rail or guarding face, measured across the track at right angles to the gauge line,[2] may not be less than—	Guard face gage The distance between the guard lines,[1] measured across the track at right angles to the gauge line,[2] may not be more than—
H0–H7	1,393 mm	1,358 mm.

[1] A line along that side of the flangeway which is nearer to the center of the track and at the same elevation as the gage line.
[2] A line 14 mm (0.55 inches) below the top of the center line of the head of the running rail, or corresponding location of the tread portion of the track structure.

Figure 1 to § 299.333 – Guard Check and Guard Face Gage Measurement (Top View)

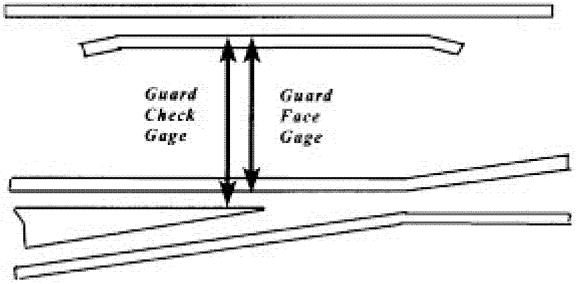

Figure 2 to § 299.333 – Guard Check and Guard Face Gage Measurement (In line with rail view)

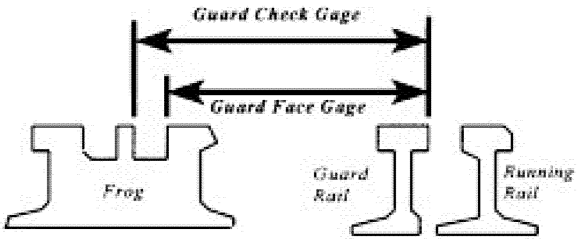

§ 299.335 Derails.

(a) Derails shall be installed at locations where maintenance-of-way equipment can access track other than Class H0, in a configuration intended to derail the un-controlled equipment away from the mainline and at a distance from the point of intersection with the mainline that will not foul the dynamic envelope of the mainline.

(b) Each derail shall be clearly visible to railroad personnel operating rail equipment on the affected track and to railroad personnel working adjacent to the affected track. When in a locked position, a derail shall be free of any lost motion that would allow it to be operated without removal of the lock.

(c) Each derail shall be maintained and function as intended.

(d) Each derail shall be properly installed for the rail to which it is applied.

(e) If a track is equipped with a derail it shall be in the derailing position except as provided in the railroad's operating rules, special instructions, or changed to permit movement.

§ 299.337 Automated vehicle-based inspection systems.

(a) A qualifying Track Geometry Measurement System (TGMS) and a qualifying Track Acceleration Measurement System (TAMS) shall be operated over the route at the following frequency:

(1) For track Class H3, at least twice per calendar year with not less than 120 days between inspections; and

(2) For track Classes H4, H5, H6, and H7, at least twice within any 60-day period with not less than 12 days between inspections.

(b) The qualifying TGMS shall meet or exceed minimum design requirements which specify that—

(1) Track geometry measurements shall be taken no more than 1 meter (3.3 feet) away from the contact point of wheels carrying a vertical load of no less than 4,500 kg (10,000 lb) per wheel;

(2) Track geometry measurements shall be taken and recorded on a distance-based sampling interval not exceeding 0.60 m (2 feet), preferably 0.30 m (1 foot);

(3) Calibration procedures and parameters are assigned to the system which assures that measured and recorded values accurately represent track conditions. Track geometry measurements recorded by the system shall not differ on repeated runs at the same site at the same speed more than 3 mm (⅛ inch); and

(4) The TGMS shall be capable of measuring and processing the necessary track geometry parameters to determine compliance with §§ 299.311 and 299.315.

(c) A qualifying TAMS shall be on a vehicle having dynamic response characteristics that are representative of other vehicles assigned to the service and shall—

(1) Be operated at the revenue speed profile in accordance with § 299.309;

(2) Be capable of measuring and processing carbody acceleration parameters to determine compliance with Carbody Acceleration Limits per § 299.313; and

(3) Monitor lateral and vertical accelerations of the carbody. The accelerometers shall be attached to the carbody on or under the floor of the vehicle, as near the center of a bogie as practicable.

(d) The qualifying TGMS and TAMS shall be capable of producing, within 24 hours of the inspection, output reports that—

(1) Provide a continuous plot, on a constant-distance axis, of all measured track geometry and carbody acceleration parameters required in paragraph (b) and (c) of this section;

(2) Provide an exception report containing a systematic listing of all track geometry and all acceleration conditions which constitute an exception to the class of track over the segment surveyed.

(e) The output reports required under paragraph (d) of this section shall contain sufficient location identification information which enables field personnel to easily locate indicated exceptions.

(f) Following a track inspection performed by a qualifying TGMS or TAMS, the railroad shall, institute remedial action for all exceptions to the class of track in accordance with the railroad's inspection, testing, and maintenance program.

(g) The railroad shall maintain for a period of one year following an inspection performed by a qualifying TGMS and TAMS, a copy of the plot and the exception report for the track segment involved, and additional records which—

(1) Specify the date the inspection was made and the track segment involved; and,

(2) Specify the location, remedial action taken, and the date thereof, for all listed exceptions to the class.

§ 299.339 Daily sweeper inspection.

A sweeper vehicle shall be operated each morning after the overnight maintenance over all tracks except track Class H2 in stations, prior to commencing revenue service over that track. The sweeper vehicle shall operate at a speed no greater than 120 km/h (75 mph) to conduct a visual inspection to ensure the right-of-way is clear of obstacles within the clearance envelope and to identify conditions that could cause accidents, and shall have a minimum clearance of no less than 35 mm above top of rail.

§ 299.341 Inspection of rail in service.

(a) Prior to revenue service the railroad shall submit written procedures for the inspection of rails in accordance with the inspection, testing, and maintenance program.

(b) On track Classes H4 to H7, and H2 within stations, a continuous search for internal defects shall be made of all rail within 180 days after initiation of revenue service and, thereafter, at least annually, with not less than 240 days between inspections.

(c) Each defective rail shall be marked with a highly visible marking on both sides of the rail.

(d) Inspection equipment shall be capable of detecting defects between joint bars and within the area enclosed by joint bars.

(e) If the person assigned to operate the rail defect detection equipment being used determines that, due to rail surface conditions, a valid search for internal defects could not be made over a particular length of track, the test on that particular length of track cannot be considered as a search for internal defects under this section.

(f) When the railroad learns, through inspection or otherwise, that a rail in that track contains any of the defects in accordance with § 299.321, a qualified individual designated under § 299.353 or § 299.355 shall determine whether or not the track may continue in use. If the qualified individual so designated determines that the track may continue in use, operation over the defective rail is not permitted until—

(1) The rail is replaced; or

(2) The remedial action as prescribed in § 299.321 has been taken.

(g) The person assigned to operate the rail defect detection equipment must be a qualified operator as defined in this subpart and have demonstrated proficiency in the rail flaw detection process for each type of equipment the operator is assigned.

§ 299.343 Initial inspection of new rail and welds.

(a) The railroad shall provide for the initial inspection of newly manufactured rail, and for initial inspection of new welds made in either new or used rail. The railroad may demonstrate compliance with this section by providing for—

(1) *Mill inspection.* A continuous inspection at the rail manufacturer's mill shall constitute compliance with the requirement for initial inspection of new rail, provided that the inspection equipment meets the applicable requirements as specified under the railroad's inspection, testing, and maintenance program and § 299.321. The railroad shall obtain a copy of the manufacturer's report of inspection and retain it as a record until the rail receives its first scheduled inspection under § 299.341;

(2) *Welding plant inspection.* A continuous inspection at a welding plant, if conducted in accordance with the provisions of paragraph (a)(1) of this section, and accompanied by a plant operator's report of inspection which is retained as a record by the railroad, shall constitute compliance with the requirements for initial inspection of new rail and plant welds, or of new plant welds made in used rail; and

(3) *Inspection of field welds.* Initial inspection of new field welds, either those joining the ends of CWR strings or those made for isolated repairs, shall be conducted before the start of revenue service in accordance with the railroad's inspection, testing, and maintenance program. The initial inspection may be conducted by means of portable test equipment. The railroad shall retain a record of such inspections until the welds receive their first scheduled inspection under § 299.341.

(b) Each defective rail found during inspections conducted under paragraph (a)(3) of this section shall be marked with highly visible markings on both sides of the rail and the appropriate remedial action as set forth in § 299.341 will apply.

§ 299.345 Visual inspections; right of way.

(a) *General.* All track shall be visually inspected in accordance with the schedule prescribed in paragraph (c) of this section by an individual qualified under this subpart. The visual inspection shall be conducted in accordance with the requirements set forth in the inspection, testing, and maintenance program under subpart G of this part.

(b) *Inspection types and frequency*—

(1) *Safe walkway inspection.* Except for track located inside trainset maintenance facilities and MOW yards and the associated portions of the right-of-way, the right-of-way and all track shall be inspected from the safe walkway during daytime hours, in accordance with the following conditions:

(i) Ballasted track shall be inspected at least once every two weeks, with a minimum of six calendar days in between inspections.

(ii) Non-ballasted track shall be inspected at least once every four weeks, with a minimum of twelve calendar days in between inspections.

(iii) No two consecutive visual inspections from the safe walkway shall be performed from the same safe walkway. Safe walkway inspections shall alternate between safe walkways on each side of the right-of-way.

(iv) In stations, the safe walkway inspection may be performed from either the safe walkway or the station platform.

(v) An additional on-track visual inspection conducted during maintenance hours under paragraph (b)(2) of this section performed in place of a visual inspection from the safe walkway under paragraph (b)(1) of this section will satisfy the visual inspection requirement of paragraph (b)(1) of this section. However, a safe walkway visual inspection performed under paragraph (b)(1) of this section cannot replace an on-track visual inspection conducted during maintenance hours under paragraph (b)(2) of this section.

(vi) Except for paragraph (b)(1)(v) of this section, inspections performed under paragraph (b)(1) of this section shall not occur during the same week as inspections performed under paragraph (b)(2) of this section.

(vii) In the event a safe walkway visual inspection is not possible on a given day due to extreme weather, the inspection may be conducted from the cab of a trainset or as an on-track visual inspection on that day in accordance with the inspection, testing, and maintenance program.

(2) *On-track inspections; other than trainset maintenance facilities and MOW yards.* Except for track located inside trainset maintenance facilities and MOW yards and the associated portions of the right-of-way, on-track visual inspections, conducted on foot during maintenance hours, shall be performed on all track in accordance with the following conditions:

(i) Ballasted track shall be inspected at least once every two weeks, with a minimum of six calendar days in between inspections.

(ii) Non-ballasted track shall be inspected at least once every four weeks, with a minimum of twelve calendar days in between inspections.

(iii) Turn-outs and track crossings on ballasted track shall be inspected at least once a week, with a minimum of three calendar days in between inspections.

(iv) Turn-outs and track crossings on non-ballasted track shall be inspected at least once every two weeks, with a minimum of six calendar days in between inspections.

(3) *On-track inspections; trainset maintenance facilities and MOW yards.* For track located inside trainset maintenance facilities and MOW yards and the associated portions of the right-of-way, including turn-outs and track crossings, on-track visual inspections, conducted on foot, shall be performed on all track in accordance with the following conditions:

(i) Ballasted track shall be inspected at least once during any 60-day period, with a minimum of twelve calendar days in between inspections.

(ii) Non-ballasted track shall be inspected at least once within any 120-day period, with a minimum of twenty-four calendar days in between inspections.

(iii) On-track safety shall be established in accordance with 49 CFR part 214 of this chapter, except for 49 CFR 214.339.

(4) *Visual inspections from trainset cab.* Visual inspections from trainset cab shall be performed for the right-of-way and track for track Class H3 and above, except for track leading to a trainset maintenance facility, at least twice weekly with a minimum of two calendar days between inspections.

(c) If a deviation from the requirements of this subpart is found during the visual inspection, remedial action shall be initiated immediately in accordance with the railroad's inspection, testing, and maintenance program required under subpart G of this part.

§ 299.347 Special inspections.

(a) In the event of fire, flood, severe storm, temperature extremes, or other occurrence which might have damaged track structure, a special inspection shall be made of the track and right-of-way involved as soon as possible after the occurrence, prior to the operation of any trainset over that track.

(b) Should a trainset be between stations when an event such as those described in paragraph (a) of this section occurs, that trainset may proceed to the next forward station at restricted speed, in accordance with the railroad's operating rules and inspection, testing, and maintenance program.

§ 299.349 Inspection records.

(a) The railroad shall keep a record of each inspection required to be performed on that track under this subpart.

(b) Except as provided in paragraph (f) of this section, each record of an inspection under §§ 299.325 and 299.345 shall be prepared on the day the inspection is made and signed by the person making the inspection.

(c) Records shall specify the track inspected, date of inspection, location, and nature of any deviation from the requirements of this part, name of qualified individual who made the inspection, and the remedial action, if any, taken by the person making the inspection.

(d) Rail inspection records shall specify the date of inspection, the location and nature of any internal defects found, name of qualified individual who made the inspection, the remedial action taken and the date thereof, and the location of any intervals of track not tested pursuant to § 299.341 of this part. The railroad shall retain a rail inspection record for at least two years after the inspection and for one year after remedial action is taken.

(e) The railroad shall make inspection records required by this section available for inspection and copying by the FRA.

(f) For purposes of compliance with the requirements of this section, the railroad may maintain and transfer records through electronic transmission, storage, and retrieval provided that—

(1) The electronic system is compliant with the requirements of § 299.11;

(2) The electronic storage of each record shall be initiated by the person making the inspection within 24 hours following the completion of that inspection; and

(3) Track inspection records shall be kept available to persons who performed the inspection and to persons performing subsequent inspections.

(g) Each track/vehicle performance record required under § 299.337 shall be made available for inspection and copying by the FRA.

§ 299.351 Qualifications for track maintenance and inspection personnel.

(a) *General.* The railroad shall designate qualified individuals responsible for the maintenance and inspection of track in compliance with the safety requirements prescribed in this subpart. Each designated individual, including contractors and their employees, must meet the minimum qualifications set forth in this subpart.

(b) *Recordkeeping.* In addition to the requirements contained in § 243.203 of this chapter, the railroad shall also maintain, with respect to the designation of individuals under this subpart, the track inspection records made by each individual as required by § 299.349.

§ 299.353 Personnel qualified to supervise track restoration and renewal.

Each individual designated to supervise restorations and renewals of track, shall have—

(a) Successfully completed a course offered by the employer or by a college level engineering program, supplemented by special on-the-job training emphasizing the techniques to be employed in the supervision, restoration, and renewal of high-speed track;

(b) Demonstrated to the railroad, at least once per calendar year, that the individual—

(1) Knows and understands the requirements of this subpart that apply to the restoration and renewal of the track for which he or she is responsible;

(2) Can detect deviations from those requirements; and

(3) Can prescribe appropriate remedial action to correct or safely compensate for those deviations.

(c) Written authorization from the railroad or the employer to prescribe remedial actions to correct or safely compensate for deviations from the requirements of this subpart and shall have successfully completed a recorded examination on this subpart as part of the qualification process.

§ 299.355 Personnel qualified to inspect track.

Each individual designated to inspect track for defects, shall have—

(a) Successfully completed a course offered by the railroad or by a college level engineering program, supplemented by special on-the-job training emphasizing the techniques to be employed in the inspection of high-speed track;

(b) Demonstrated to the railroad, at least once per calendar year, that the individual—

(1) Knows and understands the requirements of this subpart that apply to the inspection of the track for which he or she is responsible;

(2) Can detect deviations from those requirements; and

(3) Can prescribe appropriate remedial action to correct or safely compensate for those deviations.

(c) Written authorization from the railroad or the employer to prescribe remedial actions to correct or safely compensate for deviations from the requirements in this subpart and shall have successfully completed a recorded examination on this subpart as part of the qualification process.

§ 299.357 Personnel qualified to inspect and restore continuous welded rail.

Individuals designated under § 299.353 or 299.355 that inspect continuous welded rail (CWR) or supervise the installation, adjustment, and maintenance of CWR in accordance with the written procedures established by the railroad shall have—

(a) Current qualifications under either § 299.353 or 299.355;

(b) Successfully completed a training course of at least eight hours duration specifically developed for the application of written CWR procedures issued by the railroad;

(c) Demonstrated to the railroad that the individual—

(1) Knows and understands the requirements of those written CWR procedures;

(2) Can detect deviations from those requirements; and

(3) Can prescribe appropriate remedial action to correct or compensate for those deviations safely.

(d) Written authorization from the railroad or the employer to prescribe remedial actions to correct or safely compensate for deviations from the requirements in those procedures and must have successfully completed a recorded examination on those procedures as part of the qualification process. The recorded examination may be written, or in the form of a computer file with the results of an interactive training course.

Subpart D—Rolling Stock

§ 299.401 Clearance requirements.

(a) *General.* The rolling stock shall be designed to meet all applicable clearance requirements of the railroad. The railroad shall make its clearance diagrams available to FRA upon request.

(b) *Clearance above top of rail.* No part or appliance of a trainset except the wheels, sander tips, wheel guards, and other components designed to be in the path of the wheel (*i.e.,* above the rail and aligned inside the wheel width path) may be less than 60 mm (2.36 inches) above the top of rail.

(c) *Obstacle deflector.* The leading end of a trainset shall be equipped with an obstacle deflector that extends across both rails of the track. The minimum clearance above the rail of the obstacle deflector shall be 76 mm (3 inches), and the maximum clearance shall be 229 mm (9 inches).

(d) *Flexible wheel guards.* The lead axle of a trainset shall be equipped with flexible wheel guards mounted on the bogie below the primary suspension with a maximum clearance above the rail of 15 mm (0.59 inches).

§ 299.403 Trainset structure.

(a) *Occupied volume integrity.* To demonstrate resistance to loss of occupied volume, the trainsets shall comply with both the compression load requirement in paragraph (b) of this section and the dynamic collision requirements in paragraph (c) of this section.

(b) *Compression load requirement.* The end compression load shall be applied to the vehicle as defined in JIS E 7105:2006(E) as amended by JIS E 7105:2011(E) (all incorporated by reference, see § 299.17), with an end load magnitude no less than 980 kN (220,300 lbf) without permanent deformation of the occupied volume.

(c) *Dynamic collision scenario.* In addition to the requirements of paragraph (b) of this section, occupied volume integrity shall also be demonstrated for the trainset through an evaluation of a dynamic collision scenario in which a moving trainset impacts a proxy object under the following conditions:

(1) The initially-moving trainset is made up of the equipment undergoing evaluation at its AW0 ready-to-run weight.

(2) The scenario shall be evaluated on tangent, level track.

(3) The trainset shall have an initial velocity of 32 km/h (20 mph) and shall not be braked.

(4) The proxy object shall have the following characteristics:

(i) The object shall be a solid circular cylinder that weighs 6350 kg (14,000 pounds);

(ii) The object shall have a width of 914 mm (36 inches) and a diameter of 1219 mm (48 inches);

(iii) The axis of the cylinder shall be perpendicular to the direction of trainset motion and parallel to the ground; and

(iv) The center of the object shall be located 762 mm (30 inches) above the top of the underframe.

(5) Two collision configurations shall be evaluated.

(i) The center of the object shall be located 483 mm (19 inches) from the longitudinal centerline of the trainset; and

(ii) The center of the object shall be aligned with the side of the cab car at the point of maximum width.

(6) The model used to demonstrate compliance with the dynamic collision requirements must be validated. Model validation shall be demonstrated and submitted to FRA for review and approval.

(7) As a result of the impact described in paragraphs (c)(5)(i) and (ii) of this section—

(i) One of the following two conditions must be met for the occupied volume:

(A) There shall be no more than 254 mm (10 inches) of longitudinal permanent deformation; or

(B) Global vehicle shortening shall not exceed 1 percent over any 4.6 m (15-feet) length of occupied volume.

(ii) Compliance with each of the following conditions shall also be demonstrated for the cab after the impact:

(A) Each seat provided for an employee regularly assigned to occupy the cab, and any floor-mounted seat in the cab, shall maintain a survival space where there is no intrusion for a minimum of 305 mm (12 inches) from each edge of the seat. Walls or other items originally within this defined space shall not further intrude more than 38 mm (1.5 inches) towards the seat under evaluation.

(B) There shall be a clear exit path for the occupants of the cab;

(C) The vertical height of the cab (floor to ceiling) shall not be reduced by more than 20 percent; and

(D) The operating console shall not have moved closer to the driver's seat by more than 51 mm (2 inches).

(d) *Equipment override.* (1) Using the dynamic collision scenarios described in paragraph (c) of this section, and with all units in the trainset positioned at their nominal running heights, the anti-climbing performance shall be evaluated for each of the following sets of initial conditions:

(2) For the initial conditions specified in paragraphs (c)(1) through (3) of this section, compliance with the following conditions shall be demonstrated after a dynamic impact:

(i) The relative difference in elevation between the underframes of the connected equipment shall not change by more than 102 mm (4 inches); and

(ii) The tread of any wheel of the trainset shall not rise above the top of rail by more than 102 mm (4 inches).

(e) *Roof and side structure integrity.* To demonstrate roof and side structure integrity, each passenger car shall comply with the following:

(1) *Rollover strength.* (i) Each passenger car shall be designed to rest on its side and be uniformly supported at the top and bottom cords of the vehicle side. The allowable stress in the structural members of the occupied volumes for this condition shall be one-half yield or one-half the critical buckling stress, whichever is less. Local yielding to the outer skin of the passenger car is allowed provided that the resulting deformations in no way intrude upon the occupied volume of the car.

(ii) Each passenger car shall also be designed to rest on its roof so that any damage in occupied areas is limited to roof extrusions. Other than roof extrusions, the allowable stress in the structural members of the occupied volumes for this condition shall be one-half yield or one-half the critical buckling stress, whichever is less. Local yielding to the outer skin, including the floor structure, of the car is allowed provided that the resulting deformations in no way intrude upon the occupied volume of the car. Deformation to the roof extrusions is allowed to the extent necessary to permit the vehicle to be supported directly on the top chords of the sides and ends.

(2) *Side structure.* (i) The sum of the section moduli about a longitudinal axis, taken at the weakest horizontal section between the side sill and roof, of the extrusions on each side of the car located between the inside edge of the doors shall be not less than 3.95 x 105 mm^3 (24.1 in^3).

(ii) The sum of the section moduli about a transverse axis, taken at the weakest horizontal section on each side of the car located between body corners shall be not less than 2.64 x 105 mm^3 (16.1 in^3).

(iii) The minimum section moduli or thicknesses specified in paragraph (f)(2)(i) of this section shall be adjusted in proportion to the ratio of the yield strength of the material used to a value of 172 MPa (25 ksi).

(iv) The combined thickness of the skin of the side structure extrusions shall not be less than 3 mm (0.125 inch) nominal thickness. The thicknesses shall be adjusted in proportion to the ratio of the yield strength of the material used to a value of 172 MPa (25 ksi).

(f) *Bogie-to-carbody attachment.* (1) The bogie-to-carbody attachment shall utilize the service-proven design as used on the N700.

(2) The bogie shall be securely attached to the carbody and designed to operate without failure under the operating conditions of the railroad, including expected mechanical shocks and vibrations.

§ 299.405 Trainset interiors.

(a) *Interior fittings.* Interior fittings of trainsets shall be—

(1) Securely attached and designed to operate without failure under the conditions typically found in passenger rail equipment including expected mechanical vibrations, and shock.

(2) To the extent possible, all interior fittings shall be recessed or flush mounted. Corners and/or sharp edges shall be either avoided or padded to mitigate the consequence of impact with such surfaces.

(b) *Luggage stowage.* (1) Luggage stowage racks shall slope downward in the outboard direction at a minimum ratio of 1:8 with respect to a horizontal plane to provide lateral restraint for stowed articles.

(2) Luggage stowage compartments shall provide longitudinal restraint for stowed articles.

§ 299.407 Glazing.

(a) *General.* The railroad shall install glazing systems compliant with the requirements defined in this section.

(b) *Trainset glazing; end-facing.* (1) Each end-facing exterior window of the trainset shall comply with the requirements for large object and ballistic impact scenarios as defined in this section.

(2) Each end-facing exterior window of the trainset shall demonstrate compliance with the following requirements for the large object impact test.

(i) The glazing article shall be impacted with a cylindrical projectile that complies with the following design specifications as depicted in Figure 1 to paragraph (b)(2)(i)(D) of this section:

(A) The projectile shall be constructed of aluminum alloy such as ISO 6362–2:1990, grade 2017A, or its demonstrated equivalent;

(B) The projectile end cap shall be made of steel;

(C) The projectile assembly shall weigh 1 kilogram (kg) (−0, +0.020 kg) or 2.2 lbs (−0, +0.044 lbs) and shall have a hemispherical tip. Material may be removed from the interior of the aluminum portion to adjust the projectile mass according to the prescribed tolerance. The hemispherical tip shall have a milled surface with 1 mm (0.04 inches) grooves; and

(D) The projectile shall have an overall diameter of 94 mm (3.7 inches) with a nominal internal diameter of 70 mm (2.76 inches).

Figure 1 to paragraph (b)(2)(i)(D) - Large Object Glazing Test Projectile

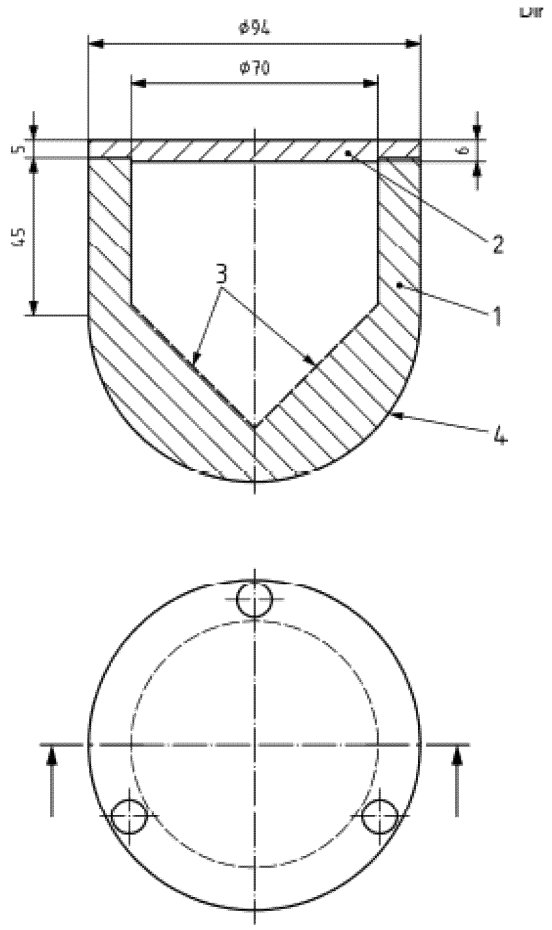

Key

1 projectile in aluminium alloy (ISO 6362-2:1990, grade 2017A)
2 steel projectile cover
3 material may be removed for adjustment purposes
4 milled surface of hemispheric tip (1 mm)

(ii) The test of the glazing article shall be deemed satisfactory if the test projectile does not penetrate the glazing article, the glazing article remains in its frame, and the witness plate is not marked by spall.

(iii) A new projectile shall be used for each test.

(iv) The glazing article to be tested shall be that which has the smallest area for each design type. For the test, the glazing article shall be fixed in a frame of the same construction as that mounted on the vehicle.

(v) A minimum of four tests shall be conducted and all must be deemed satisfactory. Two tests shall be conducted with the complete glazing article at 0 °C ± 0.5 °C (32 °F ± 0.9 °F) and two tests shall be conducted with the complete glazing article at 20 °C ± 5 °C (68 °F ± 9 °F). For the tests to be valid it shall be demonstrated that the core temperature of the complete glazing article during each test is within the required temperature range.

(vi) The test glazing article shall be mounted at the same angle relative to the projectile path as it will be to the direction of travel when mounted on the vehicle.

(vii) The projectile's impact velocity shall equal the maximum operating speed of the trainset plus 160 km/h (100 mph). The projectile velocity shall be measured within 4 m (13 feet) of the point of impact.

(viii) The point of impact shall be at the geometrical center of the glazing article.

(3) Representative samples for large object impact testing of large end-facing cab glazing articles may be used, instead of the actual design size provided that the following conditions are met:

(i) Testing of glazing articles having dimensions greater than 1,000 mm by 700 mm (39.4 by 27.6 inches), excluding framing, may be performed using a flat sample having the same composition as the glazing article for which compliance is to be demonstrated. The glazing manufacturer shall provide documentation containing its technical justification that testing a flat sample is sufficient to verify compliance of the glazing article with the requirements of this paragraph.

(ii) Flat sample testing is permitted only if no surface of the full-size glazing article contains curvature whose radius is less than 2,500 mm (98 inches); and when a complete, finished, glazing article is laid (convex side uppermost) on a flat horizontal surface, the distance, (measured perpendicularly to the flat surface) between the flat surface and the inside face of the glazing article is not greater than 200 mm (8 inches).

(4) End-facing glazing shall demonstrate sufficient resistance to spalling, as verified by the large impact

projectile test under the following conditions:

(i) An annealed aluminum witness plate of maximum thickness 0.15 mm (0.006 inches) and of dimension 500 mm by 500 mm (19.7 by 19.7 inches) is placed vertically behind the sample under test, at a horizontal distance of 500 mm (19.7 inches) from the point of impact in the direction of travel of the projectile or the distance between the point of impact of the projectile and the location of the driver's eyes in the driver's normal operating position, whichever is less. The center of the witness plate is aligned with the point of impact.

(ii) Spalling performance shall be deemed satisfactory if the aluminum witness plate is not marked.

(iii) For the purposes of this part, materials used specifically to protect the cab occupants from spall (*i.e.,* spall shields) shall not be required to meet the flammability and smoke emission performance requirements of § 299.413.

(5) Each end-facing exterior window in a cab shall, at a minimum, provide ballistic penetration resistance that meets the requirements of appendix A to part 223 of this chapter.

(c) *Trainset glazing; side-facing.* Except as provided in paragraph (d) of this section, each side-facing exterior window in a trainset shall comply with the requirements for Type II glazing as defined in part 223 of this chapter or other alternative standard approved by FRA.

(d) *Side-facing breakable glazing.* A side-facing exterior window intended to be breakable and serve as an emergency egress window may comply with an alternative standard approved for use by FRA under § 299.15.

(e) *Certification of Glazing Materials.* Glazing materials shall be certified in accordance with the following procedures:

(1) Each manufacturer that provides glazing materials, intended by the manufacturer for use in achieving compliance with the requirements of this subpart, shall certify that each type of glazing material being supplied for this purpose has been successfully tested in accordance with this section and that test verification data are available to the railroad or to FRA upon request.

(2) Tests performed on glazing materials for compliance with this part shall be conducted by either—

(i) An independent third party (lab, facility, underwriter); or

(ii) The glazing manufacturer, providing FRA with the opportunity to witness all tests by written notice, a minimum of 30 days prior to testing.

(3) Any glazing material certified to meet the requirements of this part shall be re-certified if any change is made to the glazing that may affect its mechanical properties or its mounting arrangement on the vehicle.

(4) All certification/re-certification documentation shall be made available to FRA upon request. The test verification data shall contain all pertinent original data logs and documentation that the selection of material samples, test set-ups, test measuring devices, and test procedures were performed by qualified individuals using recognized and acceptable practices and in accordance with this section.

(5) Glazing shall be marked in the following manner:

(i) Each end-facing exterior window in a cab shall be permanently marked, prior to installation, in such a manner that the marking is clearly visible after the material has been installed. The marking shall include:

(A) The words ''FRA TYPE IHS'' to indicate that the material meets the requirements specified in paragraph (b) of this section;

(B) The manufacturer of the material; and

(C) The type or brand identification of the material.

(ii) Each side-facing exterior window in a trainset shall be permanently marked, prior to installation, in such a manner that the marking is clearly visible after the material has been installed. The marking shall include:

(A) The words ''FRA TYPE II'' to indicate that the material meets the requirements specified in paragraph (c) of this section;

(B) The manufacturer of the material; and

(C) The type or brand identification of the material.

(f) *Glazing securement.* Each exterior window shall remain in place when subjected to—

(1) The forces due to air pressure differences caused when two trainsets pass at the minimum separation for two adjacent tracks, while traveling in opposite directions, each trainset traveling at the maximum approved trainset speed in accordance with § 299.609(g); and

(2) The impact forces that the exterior window is required to resist as specified in this section.

§ 299.409 Brake system.

(a) *General.* The railroad shall demonstrate through analysis and testing the maximum safe operating speed for its trainsets that results in no thermal damage to equipment or infrastructure during normal operation of the brake system.

(b) *Minimum performance requirement for brake system.* Each trainset's brake system, under the worst-case adhesion conditions as defined by the railroad, shall be capable of stopping the trainset from its maximum operating speed within the signal spacing existing on the track over which the trainset is operating.

(c) *Urgent brake system.* A trainset shall be provided with an urgent brake application feature that produces an irretrievable stop. An urgent brake application shall be available at any time, and shall be initiated by an unintentional parting of the trainset or by the trainset crew from the conductor rooms.

(d) *Application/release indication.* The brake system shall be designed so that an inspector may determine whether the brake system is functioning properly without being placed in a dangerous position on, under or between the equipment. This determination may be made through automated monitoring system that utilizes sensors to verify that the brakes have been applied and released.

(e) *Passenger brake alarm.* (1) A means to initiate a passenger brake alarm shall be provided at two locations in each unit of a trainset. The words ''Passenger Brake Alarm'' shall be legibly stenciled or marked on each device or on an adjacent badge plate.

(2) All passenger brake alarms shall be installed so as to prevent accidental activation.

(3) When a passenger brake alarm is activated, it shall initiate an emergency brake application. The emergency brake application can be overridden by the driver so that the trainset can be stopped at a safe location.

(4) To retrieve the emergency brake application described in paragraph (e)(3) of this section, the driver must activate appropriate controls to issue a command for brake application as specified in the railroad's operating rules.

(f) *Degraded brake system performance.* The following requirements address degraded brake system performance on the railroad's high-speed trainsets—

(1) Loss of power or failure of regenerative brake shall not result in exceeding the allowable stopping distance as defined by the railroad;

(2) The available friction braking shall be adequate to stop the trainset safely under the operating conditions defined by the railroad;

(3) The operational status of the trainset brake system shall be displayed for the driver in the operating cab; and

(4) Under § 299.607(b)(5), the railroad shall demonstrate through analysis and testing the maximum speed for safely operating its trainsets using only the friction brake system with no thermal damage to equipment or infrastructure. The analysis and testing shall also determine the maximum safe operating speed for various percentages of operative friction brakes.

(g) *Main reservoir system.* The main reservoirs in a trainset shall be designed and tested to meet the requirements set forth in JIS B 8265:2010(E) (incorporated by reference, *see* § 299.17). Reservoirs shall be certified based on their size and volume requirements.

(h) *Main reservoir tests.* Prior to initial installation, each main reservoir shall be subjected to a pneumatic or hydrostatic pressure test based on the maximum working pressure defined in paragraph (g) of this section unless otherwise established by the railroad's mechanical officer. Records of the test date, location, and pressure shall be maintained by the railroad for the life of the equipment. Periodic inspection requirements for main reservoirs shall be defined in the railroad's inspection, testing, and maintenance program required under § 299.445.

(i) *Brake gauges.* All mechanical gauges and all devices providing electronic indication of air pressure that are used by the driver to aid in the control or braking of a trainset shall be located so that they can be conveniently read from the driver's normal position during operation of the trainset.

(j) *Brake application/release.* (1) Brake actuators shall be designed to provide brake pad clearance when the brakes are released.

(2) The minimum brake cylinder pressure shall be established to provide adequate adjustment from minimum service to emergency for proper trainset operation.

(k) *Leakage.* The method of inspection for main reservoir pipe and brake cylinder pipe leakage shall be prescribed in the railroad's inspection, testing, and maintenance program required by § 299.445.

(l) *Slide alarm.* (1) A trainset shall be equipped with an adhesion control system designed to automatically adjust the braking force on each wheel to prevent sliding during braking.

(2) A wheel slide alarm that is visual or audible, or both, shall alert the driver in the operating cab to wheel-slide conditions on any axle of the trainset.

(3) Operating restrictions for a trainset with wheel slide protection devices that are not functioning as intended shall be defined by the railroad under its requirements for movement of defective equipment required by § 299.447, and within the railroad's operating rules, as appropriate.

(m) *Monitoring and diagnostic system.* Each trainset shall be equipped with a monitoring and diagnostic system that is designed to assess the functionality of the brake system for the entire trainset automatically. Details of the system operation and the method of communication of brake system functionality prior to the dispatch of the trainset shall be described in detail in the railroad's Operating Rules and inspection, testing, and maintenance program required by § 299.445.

(n) *Trainset securement.* Each trainset shall be equipped with a means of securing the equipment, independent of the friction brake, on the grade condition defined by the railroad. The railroad's operating rules shall define procedures for trainset securement and the railroad shall demonstrate that these procedures effectively secure the equipment in accordance with § 299.607(b)(5).

(o) *Rescue operation; brake system.* A trainset's brake system shall be designed so as to allow a rescue vehicle or trainset to control its brakes when the trainset is disabled.

§ 299.411 Bogies and suspension system.

(a) *Wheel climb.* (1) Suspension systems shall be designed to reasonably prevent wheel climb, wheel unloading, rail rollover, rail shift, and a vehicle from overturning to ensure safe, stable performance and ride quality. These requirements shall be met—

(i) In all operating environments, and under all track conditions and loading conditions as determined by the railroad; and

(ii) At all track speeds and over all track qualities consistent with the requirements in subpart C of this part, up to the maximum trainset speed and maximum cant deficiency of the equipment in accordance with § 299.609(g).

(2) All passenger equipment shall meet the safety performance standards for suspension systems contained in § 299.609(h). In particular—

(i) *Vehicle/track system qualification.* All trainsets shall demonstrate safe operation during vehicle/track system qualification in accordance with § 299.609 and is subject to the requirements of § 299.315.

(ii) *Revenue service operation.* All passenger equipment in service is subject to the requirements of § 299.315.

(b) *Lateral accelerations.* The trainsets shall not operate under conditions that result in a steady-state lateral acceleration greater than 0.15g, as measured parallel to the car floor inside the passenger compartment.

(c) *Journal bearing overheat sensors.* Bearing overheat sensors shall be provided on all journal bearings on each trainset.

§ 299.413 Fire safety.

(a) *General.* All materials used in constructing the interior of the trainset shall meet the flammability and smoke emission characteristics and testing standards contained in appendix B to part 238 of this chapter. For purposes of this section, the interior of the trainset includes walls, floors, ceilings, seats, doors, windows, electrical conduits, air ducts, and any other internal equipment.

(b) *Certification.* The railroad shall require certification that a representative sample of combustible materials to be—

(1) Used in constructing a passenger car or a cab, or

(2) Introduced in a passenger car or a cab, as part of any kind of rebuild, refurbishment, or overhaul of the car or cab, has been tested by a recognized independent testing laboratory and that the results show the representative sample complies with the requirements of paragraph (a) of this section at the time it was tested.

(c) *Fire safety analysis.* The railroad shall ensure that fire safety considerations and features in the design of the trainsets reduce the risk of personal injury caused by fire to an acceptable level in its operating environment using a formal safety methodology. To this end, the railroad shall complete a written fire safety analysis for the passenger equipment being procured. In conducting the analysis, the railroad shall—

(1) Identify, analyze, and prioritize the fire hazards inherent in the design of the equipment.

(2) Take effective steps to design the equipment and select materials which help provide sufficient fire resistance to reasonably ensure adequate time to detect a fire and safely evacuate the passengers and crewmembers, if a fire cannot be prevented. Factors to consider include potential ignition sources; the type, quantity, and location of the materials; and availability of rapid and safe egress to the exterior of the equipment under conditions secure from fire, smoke, and other hazards.

(3) Reasonably ensure that a ventilation system in the equipment does not contribute to the lethality of a fire.

(4) Identify in writing any trainset component that is a risk of initiating fire and which requires overheat protection. An overheat detector shall be installed in any component when the analysis determines that an overheat detector is necessary.

(5) Identify in writing any unoccupied trainset compartment that contains equipment or material that poses a fire hazard, and analyze the benefit provided by including a fire or smoke detection system in each compartment so identified. A fire or smoke detector shall be installed in any unoccupied compartment when the analysis determines that such equipment is necessary to ensure sufficient time for the safe evacuation of passengers and crewmembers from the trainset. For purposes of this section, an unoccupied trainset compartment means any part of the equipment structure that is not normally occupied during operation of the trainset, including a closet, baggage compartment, food pantry, etc.

(6) Determine whether any occupied or unoccupied space requires a portable fire extinguisher and, if so, the proper type and size of the fire extinguisher for each location. As required by § 239.101 of this chapter, each passenger car is required to have a minimum of one portable fire extinguisher. If the analysis performed indicates that one or more additional portable fire extinguishers are needed, such shall be installed.

(7) Analyze the benefit provided by including a fixed, automatic fire-suppression system in any unoccupied trainset compartment that contains equipment or material that poses a fire hazard, and determine the proper type and size of the automatic fire-suppression system for each such location. A fixed, automatic fire-suppression system shall be installed in any unoccupied compartment when the analysis determines that such equipment is practical and necessary to ensure sufficient time for the safe evacuation of passengers and crewmembers from the trainset.

(8) Explain how safety issues are resolved in the design of the equipment and selection of materials to reduce the risk of each fire hazard.

(9) Describe the analysis and testing necessary to demonstrate that the fire protection approach taken in the design of the equipment and selection of materials meets the fire protection requirements of this part.

(d) *Inspection, testing, and maintenance.* The railroad shall develop and adopt written procedures for the inspection, testing, and maintenance of all fire safety systems and fire safety equipment on the passenger equipment it operates under § 299.445(b), and subpart G of this part. The railroad shall comply with those procedures that it designates as mandatory for the safety of the equipment and its occupants.

§ 299.415 Doors.

(a) Each powered, exterior side door in a vestibule that is partitioned from the passenger compartment of a trainset shall have a manual override device that is—

(1) Capable of releasing the door to permit it to be opened without power.

(2) Located such that—

(i) Interior access is provided adjacent to each manual door release mechanism; and,

(ii) Exterior access is provided on each side of each car.

(3) Designed and maintained so that a person may access and operate the override device readily without requiring the use of a tool or other implement.

(4) The railroad may protect a manual override device used to open a powered, exterior door with a cover or a screen.

(5) When a manual override device is activated, door panel friction, including seals and hangers, shall allow the doors to be opened or closed manually with as low a force as practicable.

(6) The emergency release mechanism shall require manual reset.

(b) Each passenger car shall have a minimum of one exterior side door per side. Each such door shall provide a minimum clear opening with dimensions of 813 mm (32 inches) horizontally by 1,850 mm (72.8 inches) vertically.

(c) Door exits shall be marked, and instructions provided for their use, as specified in § 299.423.

(d) All doors intended for access by emergency responders shall be marked, and instructions provided for their use, as specified in § 299.423.

(e) Vestibule doors and other interior doors intended for passage through a passenger car.

(1) *General.* Except for a door providing access to a control compartment each powered vestibule door and any other powered interior door intended for passage through a passenger car shall have a manual override device that conforms with the requirements of paragraphs (e)(2) and (3) of this section.

(2) *Manual override devices.* Each manual override device shall be:

(i) Capable of releasing the door to permit it to be opened without power;

(ii) Located adjacent to the door it controls; and

(iii) Designed and maintained so that a person may readily access and operate the override device from each side of the door without the use of a tool or other implement.

(3) *Marking and instructions.* Each manual override device and each retention mechanism shall be marked, and instructions provided for their use, as specified in § 299.423.

(f) The status of each powered, exterior side door in a passenger car shall be displayed to the driver in the operating cab. Door interlock sensors shall be provided to detect trainset motion and shall be nominally set to operate at 5 km/h.

(g) All powered exterior side passenger doors shall—

(1) Be equipped with the service-proven door safety system utilized by the N700 or an alternate door safety system designed subject to a Failure Modes, Effects, Criticality Analysis (FMECA);

(2) Be designed with an obstruction detection system capable of detecting a rigid flat bar, 6.4 mm (¼ inches) wide and 76 mm (3 inches) high and a rigid rod, 9.5 mm (⅜ inches) in diameter;

(3) Incorporate an obstruction detection system sufficient to detect large obstructions;

(4) Be designed so that activation of a door by-pass feature does not affect the operation of the obstruction detection system on all the other doors on the trainset;

(5) Have the door control station located in a secured area that is only accessible to crewmembers or maintenance personnel;

(6) Be designed such that the door open or closed circuit is not affected by the throttle position; and

(7) Use discrete, dedicated trainlines for door-open and door-close commands, door-closed summary circuit, and no motion, if trainlined.

(h) All powered exterior side door systems in a trainset shall—

(1) Be designed with a door summary circuit. The door summary circuit shall be connected or interlocked to prohibit the trainset from developing tractive power if an exterior side door in a passenger car, other than a door under the direct physical control of a crewmember for his or her exclusive use, is not closed;

(2) Be connected to side door status indicators located on the exterior of each unit of the trainset;

(3) Be connected to a door summary status indicator that is readily viewable to the driver from his or her normal position in the operating cab;

(4) If equipped with a trainset-wide door by-pass device, be designed so that the trainset-wide door by-pass functions only when activated from the operating cab of the trainset;

(5) Be equipped with a lock (cut-out/lock-out) mechanism installed at each door panel to secure a door in the closed and locked position. When the lock mechanism is utilized to secure the door in the closed position, a door-closed indication shall be provided to the door summary circuit; and

(6) Be designed such that a crew key or other secure device be required to lock-out an exterior side door to prevent unauthorized use.

(i)(1) *Visual inspections and functional tests.* The inspection and functional tests required for the door safety system, including the trainset-wide door by-pass verification, shall be conducted in accordance with the railroad's trainset inspection, testing, and maintenance program in accordance with § 299.445, and operating rules under subpart E.

(2) *Face-to-face relief.* Crewmembers taking control of a trainset do not need to perform a visual inspection or a functional test of the door by-pass devices in cases of face-to-face relief of another trainset crew and notification by that crew as to the functioning of the door by-pass devices.

(j) The railroad shall maintain a record of each door by-pass activation and each unintended opening of a powered exterior side door, including any repair(s) made, in the defect tracking system as required by § 299.445(h).

§ 299.417 Emergency lighting.

(a) *General.* Emergency lighting shall be provided in each unit of a trainset. The emergency lighting system shall be designed to facilitate the ability of passengers and trainset crew members, and/or emergency responders to see and orient themselves, to identify obstacles, in order to assist them to safely move through and out of a passenger rail car.

(1) Emergency lighting shall illuminate the following areas:

(i) Passenger car aisles, passageways, and toilets;

(ii) Door emergency exit controls/manual releases;

(iii) Vestibule floor near the door emergency exits (to facilitate safe entrance/exit from the door);

(iv) Within the car diaphragm and adjacent area; and

(v) Specialty car locations such as crew offices.

(b) *Minimum illumination levels.* (1) A minimum, average illumination level of 10.7 lux (1 foot-candle) measured at floor level adjacent to each exterior door and each interior door providing access to an exterior door (such as a door opening into a vestibule);

(2) A minimum, average illumination level of 10.7 lux (1 foot-candle) measured 635 mm (25 inches) above floor level along the center of each aisle and passageway;

(3) A minimum illumination level of 1.1 lux (0.1 foot-candle) measured 635 mm (25 inches) above floor level at any point along the center of each aisle and passageway;

(c) *Lighting activation.* Each emergency lighting fixture shall activate automatically or be energized continuously whenever the car is in revenue service and normal lighting is not available.

(d) *Independent power source.* Emergency lighting system shall have an independent power source(s) that is located in or within one half a car length of each light fixture it powers.

(e) *Functional requirements.* Emergency lighting system components shall be designed to operate without failure and capable of remaining attached under the conditions typically found in passenger rail equipment including expected mechanical vibrations, and shock in accordance with § 299.405(a)(1), as well as comply with electromagnetic interference criteria in § 299.435(e).

(1) All emergency lighting system components shall be capable to operate in all railcar orientations.

(2) All emergency lighting system components shall be capable to operate when normal power is unavailable for 90 minutes without a loss of more than 40% of the minimum illumination levels specified in paragraph (b) of this section.

(f) *Inspection.* (1) The railroad shall inspect the emergency lighting system as required by its inspection, testing, and maintenance program in accordance with § 299.445.

(2) If batteries are used as independent power sources, they shall have automatic self-diagnostic modules designed to perform discharge tests.

§ 299.419 Emergency communication.

(a) *PA (public address) system.* Each passenger car shall be equipped with a PA system that provides a means for a trainset crewmember to communicate by voice to passengers of his or her trainset in an emergency situation. The PA system shall also provide a means for a trainset crewmember to communicate by voice in an emergency situation to persons in the immediate vicinity of his or her trainset (*e.g.,* persons on the station platform). The PA system may be part of the same system as the intercom system.

(b) *Intercom system.* Each passenger car shall be equipped with an intercom system that provides a means for passengers and crewmembers to communicate by voice with each other in an emergency situation. Except as further specified, at least one intercom that is accessible to passengers without using a tool or other implement shall be located in each end (half) of each car.

(c) *Marking and instructions.* The following requirements apply to all units of a trainset:

(1) The location of each intercom intended for passenger use shall be conspicuously marked with HPPL material in accordance with § 299.423; and

(2) Legible and understandable operating instructions shall be made of HPPL material in accordance with § 299.423 and posted at or near each such intercom.

(d) *Back-up power.* PA and intercom systems shall have a back-up power system capable of—

(1) Powering each system to allow intermittent emergency communication for a minimum period of 90 minutes. Intermittent communication shall be considered equivalent to continuous communication during the last 15 minutes of the 90-minute minimum period; and

(2) Operating in all equipment orientations within 90 degrees of vertical.

(e) *Additional requirements.* The PA and intercom systems shall be designed to operate without failure and remain attached under the conditions typically found in passenger rail equipment including expected mechanical vibrations, and shock in accordance with § 299.405(a)(1), as well as comply with electromagnetic interference criteria in § 299.435(e).

§ 299.421 Emergency roof access.

(a) *Number and dimensions.* Each passenger car shall have a minimum of two emergency roof access locations, each providing a minimum opening of 660 mm (26 inches) longitudinally (*i.e.,* parallel to the longitudinal axis of the car) by 610 mm (24 inches) laterally.

(b) *Means of access.* Emergency roof access shall be provided by means of a conspicuously marked structural weak point in the roof for access by properly equipped emergency response personnel.

(c) *Location.* Emergency roof access locations shall be situated so that when a car is on its side—

(1) One emergency access location is situated as close as practicable within

each half of the roof as divided top from bottom; and

(2) One emergency access location is situated as close as practicable within each half of the roof as divided left from right. (*See* Figure 1 to this paragraph.)

Figure 1 to paragraph (c)(2) - Example of Location of Emergency Roof Access

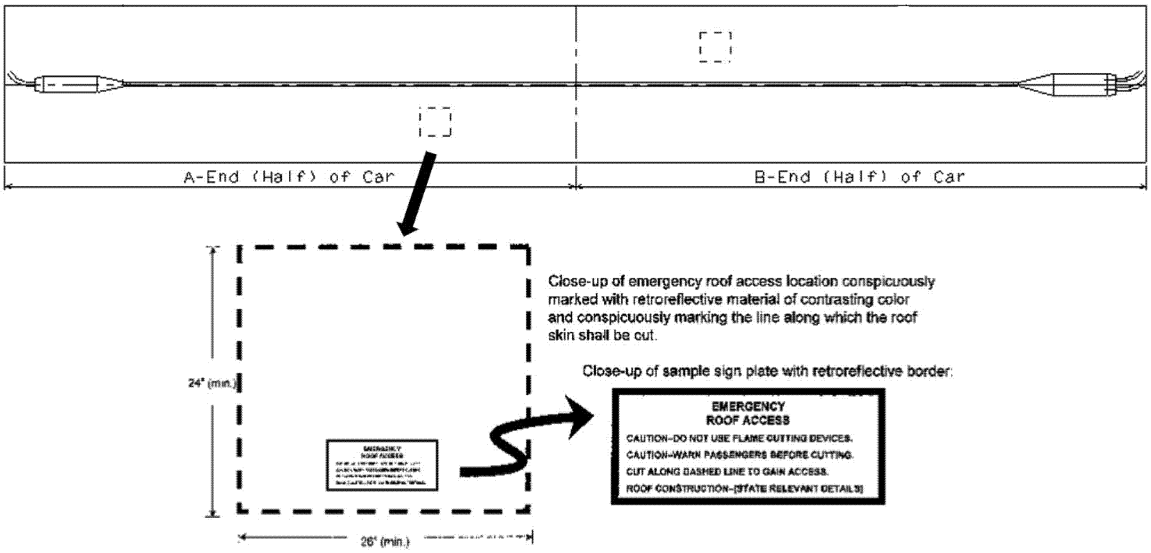

(d) *Obstructions.* The ceiling space below each emergency roof access location shall be free from wire, cabling, conduit, and piping. This space shall also be free of any rigid secondary structure (*e.g.,* a diffuser or diffuser support, lighting back fixture, mounted PA equipment, or luggage rack) where practicable. It shall be permissible to cut through interior panels, liners, or other non-rigid secondary structures after making the cutout hole in the roof, provided any such additional cutting necessary to access the interior of the vehicle permits a minimum opening of the dimensions specified in paragraph (a) of this section to be maintained.

(e) *Marking instructions.* Each emergency roof access location shall be conspicuously marked with retroreflective material of contrasting color meeting the minimum requirements specified in § 299.423. Legible and understandable instructions shall be posted at or near each such location.

§ 299.423 Markings and instructions for emergency egress and rescue access.

(a) *General.* Instructions and markings shall be provided in each unit of a trainset in accordance with the minimum requirements of this section to provide instructions for passengers and trainset crewmembers regarding emergency egress, and rescue access instructions for emergency responders.

(b) *Visual identity and recognition.* Emergency exit signage/marking systems shall enable passengers and trainset crewmembers to make positive identification of emergency exits.

(1) Each interior emergency exit sign and emergency exit locator sign shall be conspicuous (*i.e.,* clearly recognizable/distinguishable) or become conspicuous to passengers and trainset crewmembers immediately and automatically upon the loss of power for normal lighting, from a minimum distance of 1.52 m (5 feet).

(2) The signs and markings shall operate independently of the car's normal and emergency lighting systems, for a minimum of 90 minutes after loss of all power for normal lighting.

(3) An emergency exit locator sign shall be located in close proximity of each emergency exit and shall work in conjunction with the emergency exit sign. The location of the sign, directional arrow(s), or wording shall guide passengers and trainset crewmembers to the emergency exit route.

(c) *Rescue access signage/marking systems.* (1) Rescue access signage and marking systems shall enable emergency responders to make positive identification of rescue access points.

(2) Rescue access information for emergency responders placed on the exterior of the carbody shall, at a minimum, consist of the following:

(i) Each door intended for use by emergency responders for rescue access shall be identified with emergency access signs, symbols, or other conspicuous marking consisting of retroreflective material that complies with paragraphs (d) and (e) of this section.

(ii) Rescue access door control locator signs/markings and instructions;

(A) Each door intended for use by emergency responders for rescue access shall have operating instructions for opening the door from outside the car placed on or immediately adjacent to the door on the carbody. If a power door does not function with an integral release mechanism, the instructions shall indicate the location of the exterior manual door control.

(B) Each power door intended for use by emergency responders for rescue access which has a non-integral release mechanism located away from the door, shall have a door control sign/marking placed at the location of this control that provides instructions for emergency operation, either as part of the access sign/marking or as another sign/marking.

(C) Each car equipped with manual doors shall have operating instructions for opening the door from the exterior, either as part of the access sign/marking or as another sign/marking.

(iii) Rescue access window locator signs/markings and instructions; and

(A) Each rescue access window shall be identified with a unique retroreflective and easily recognizable sign, symbol, or other conspicuous marking that complies with paragraphs (d) and (e) of this section.

(B) Signs, symbols, or marking shall be placed at the bottom of each such window, on each window, or adjacent

to each window, utilizing arrows, where necessary, to clearly designate rescue assess window location. Legible and understandable window-access instructions, including any pictogram/instructions for removing the window, shall be posted at or near each rescue access window.

(iv) Roof access locator signs/markings and instructions.

(A) The location of each emergency access point provided on the roof of a passenger car shall be clearly marked with retroreflective material of contrasting color that complies with paragraphs (d) and (e) of this section.

(B) Legible and understandable instructions shall be posted at or near each such location.

(C) If emergency roof access is provided by means of a structural weak point:

(*1*) The retroreflective material shall clearly mark the line along which the roof skin shall be cut; and

(*2*) A sign plate with a retroreflective border shall also state:

CAUTION—DO NOT USE FLAME CUTTING DEVICES.

CAUTION—WARN PASSENGERS BEFORE CUTTING.

CUT ALONG DASHED LINE TO GAIN ACCESS.

ROOF CONSTRUCTION—[STATE RELEVANT DETAILS].

(d) *Color contrast.* Exterior signs/markings shall provide luminance contrast ratio of not less than 0.5, as measured by a color-corrected photometer.

(e) *Materials*—(1) *Retroreflective material.* Exterior emergency rescue access locator signs/markings shall be constructed of retroreflective material that conforms to the specifications for Type I material sheeting, as specified in ASTM D 4956–07 $^{\varepsilon 1}$ (incorporated by reference, *see* § 299.17), as tested in accordance with ASTM E 810–03 (incorporated by reference, *see* § 299.17).

(2) *HPPL materials.* All HPPL materials used in finished component configurations shall comply with the minimum luminance criterion of 7.5 mcd/m^2 after 90 minutes when tested according to the provisions of ASTM E 2073–07 (incorporated by reference, *see* § 299.17), with the following three modifications:

(i) *Activation.* The HPPL material shall be activated with a fluorescent lamp of 40W or less and a color temperature of 4000–4500K that provides no more than 10.7 lux (1 fc) of illumination as measured on the material surface. The activation period shall be for no more than 60 minutes.

(ii) *Luminance.* The photopic luminance of all specimens of the HPPL material shall be measured with a luminance meter as defined in section 5.2 of ASTM E 2073–07, a minimum of 90 minutes after activation has ceased.

(iii) *Luminance in mcd/m*^{2}. The test report shall include a luminance measurement 90 minutes after activation has ceased.

(f) *Recordkeeping.* (1) The railroad shall retain a copy of the car manufacturer/supplier provided independent laboratory certified test report results showing that the illuminance or luminance measurements, as appropriate, on the active area of the signage/marking component. Such records shall be kept until all cars with those components are retired, transferred, leased, or conveyed to another railroad for use in revenue service. A copy of such records shall be transferred to the accepting railroad along with any such cars.

(2) The railroad shall retain a copy of the railroad-approved illuminance test plan(s) and test results until the next periodic test, or other test specified in accordance with the railroad's inspection, testing, and maintenance program is conducted on a representative car/area, or until all cars of that type are retired, or are transferred, leased, or conveyed to another railroad. A copy of such records shall be transferred to the accepting railroad along with such car(s).

(3) The railroad shall retain a copy of the certified independent laboratory test report results that certify that the retroreflective material complies with Type I materials per ASTM D–4956–07 $^{\varepsilon 1}$ until all cars containing the retroreflective material are retired, or are transferred, leased, or conveyed to another railroad. A copy of such records shall be provided to the accepting railroad along with any car(s) that are transferred, leased, or conveyed.

§ 299.425 Low-location emergency exit path marking.

(a) *General.* Low-location emergency exit path marking (LLEEPM) shall be provided in each unit of a trainset. The LLEEPM system shall be designed to identify the location of primary door exits and the exit path to be used to reach such doors by passengers and trainset crewmembers under conditions of darkness when normal and emergency sources of illumination are obscured by smoke or are inoperative.

(b) *Visual identity and recognition.* The LLEEPM system shall be conspicuous (*i.e.,* clearly recognizable/distinguishable), or become conspicuous immediately and automatically from a low-location upon loss of power for normal lighting, and under the minimum general emergency light illumination levels as specified in § 299.423.

(c) *Signage and markings.* At a minimum, the LLEEPM system shall have the following three components:

(1) *Primary door exit signs.* (i) Each primary door exit shall be clearly marked with an exit sign;

(ii) The exit sign shall be visible from a low-location from the exit along the exit path; and

(iii) Each exit sign shall be located on or immediately adjacent to each door and placed between 152.4 and 457.2 mm (6 and 18 inches) above the floor.

(2) *Primary door exit marking/delineators.* (i) The location of the exit path shall be marked using electrically powered (active) marking/delineators or light fixtures, HPPL (passive) marking/delineators or a combination of these two systems.

(ii) The requirements in this section apply for both electrical and HPPL components, whether installed on the walls, floors, or seat assemblies.

(iii) Each primary door shall be marked on or around the door's operating handle.

(3) *Exit path marking/delineators.* (i) The marking/delineator components shall be positioned so as to identify an exit path to all primary exits that is clearly visible and easily recognizable from any seat or compartment in the trainset, when normal lighting and emergency lighting are unavailable in conditions of darkness and/or smoke.

(ii) Markings/delineators shall be located on the floor or no higher than 457.2 mm (18 inches) on the seat assembly, or walls/partitions of aisles, and/or passageways.

(iii) Changes in the direction of the exit path shall be indicated by the LLEEPM and be placed within 102 mm (4 inches) of the corner of the exit path.

(d) *Material*—(1) *HPPL passive systems.* HPPL strip marking/delineator material used for LLEEPM components shall be capable of providing a minimum luminance level of 7.5 mcd/m^2, measured 90 minutes after normal power has ceased.

(2) *Electroluminescent marking/delineator strips.* The luminance value of the electroluminescent (EL) marking/delineator strip shall be at least 1,000 mcd/m^2, as measured on the strip surface.

(e) *Conspicuity of markings.* LLEEPM signs shall comply with the text, color and respective illuminance or luminance requirements specified in § 299.423 and in this section.

(f) *Emergency performance duration.* The LLEEPM system shall operate independently of the car's normal and emergency lighting systems for 90 minutes after loss of all power for normal lighting.

(g) *Recordkeeping.* (1) The railroad shall retain a copy of the car manufacturer/supplier provided certified independent laboratory test report results showing that the illuminance or luminance measurements, as appropriate, on the active area of the signage/marking/delineator component comply with the criteria specified in § 299.423 and in this section.

(2) The railroad shall retain a copy of the railroad-approved illuminance test plan(s) and test results until the next periodic test, or other test specified in accordance with the railroad's inspection, testing, and maintenance program and ensure that tests are conducted on a representative car, or until all cars of that type are retired, transferred, leased, or conveyed to another railroad. A copy of such records shall be provided to the accepting railroads along with any car(s) that are transferred, leased, or conveyed.

(3) Illegible, broken, damaged, missing, or non-functioning components of the LLEEPM system, including the normal and emergency power systems, shall be reported and repaired in accordance with the railroad's inspection, testing, and maintenance program as specified in § 299.445.

§ 299.427 Emergency egress windows.

(a) *Number and location.* Each unit in a trainset shall have a minimum of four emergency egress windows. At least one emergency egress window shall be located in each side of each end (half) of the car, in a staggered configuration where practicable. (See Figure 1 to this paragraph.)

Figure 1 to paragraph (a) - Example of Location and Staggering of Emergency Egress and Rescue Access Windows—Top and Side View Depictions

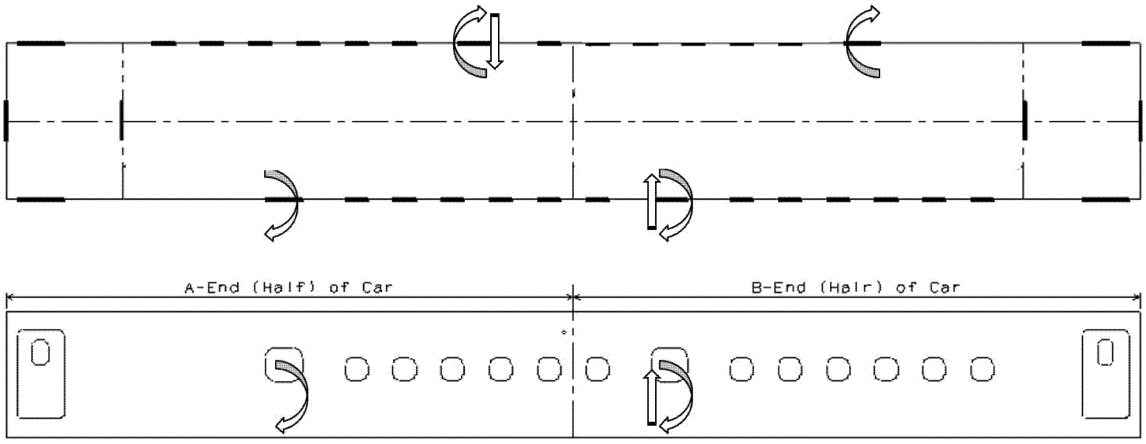

(b) *Ease of operability.* Each emergency egress window shall be designed to permit rapid and easy removal from the inside of the car during an emergency situation using a hammer designed to break the glazing that shall be located adjacent to each emergency egress window. The railroad shall inspect for the presence of the emergency hammers each day prior to the trainset being placed into service in accordance with § 299.711(b).

(c) *Dimensions.* Except as provided in paragraph (f) of this section, each emergency egress window in a passenger car shall have an unobstructed opening with minimum dimensions of 660 mm (26 inches) horizontally by 610 mm (24 inches) vertically. A seatback is not an obstruction if it can be moved away from the window opening without using a tool or other implement.

(d) *Marking and instructions.* (1) Each emergency egress window shall be conspicuously and legibly marked with luminescent material on the inside of each car to facilitate passenger egress as specified in § 299.423.

(2) Legible and understandable operating instructions, including instructions for removing the emergency egress window shall be made of luminescent material, shall be posted at or near each such emergency egress window as specified in § 299.423.

(e) *Obstructions.* If emergency egress window removal may be hindered by the presence of a seatback, headrest, luggage rack, or other fixture, the instructions shall state the method for allowing rapid and easy removal of the emergency egress window, taking into account the fixture(s), and this portion of the instructions may be in written or pictorial format.

(f) *Additional emergency egress windows.* Any emergency egress window in addition to the minimum number required by paragraph (a) of this section that has been designated for use by the railroad need not comply with the minimum dimension requirements in paragraph (c) of this section, but must otherwise comply with all requirements in this subpart applicable to emergency egress windows.

§ 299.429 Rescue access windows.

(a) *General.* Each emergency egress window required by § 299.427 shall also serve as a means of rescue access.

(b) *Ease of operability.* Each rescue access window must be capable of being removed without unreasonable delay by an emergency responder using tools or implements that are commonly available to the responder in a passenger trainset emergency.

(c) *Marking and instructions.* (1) Each rescue access window shall be marked with retroreflective material on the exterior of each car as specified in § 299.423. A unique and easily recognizable symbol, sign, or other conspicuous marking shall also be used to identify each such window.

(2) Legible and understandable window-access instructions, including

instructions for removing the window, shall be posted at or near each rescue access window as specified in § 299.423.

§ 299.431 Driver's controls and cab layout.

(a) *Driver controls and cab layout.* Driver controls and cab layout shall replicate that used in the N700, unless otherwise approved by FRA.

(b) *Cab seating.* Each seat provided for an employee regularly assigned to occupy a cab and any floor-mounted seat in the cab shall be securely attached in accordance with § 299.405.

(c) *Cab interior surface.* Sharp edges and corners shall be eliminated from the interior of the cab, and interior surfaces of the cab likely to be impacted by an employee during a collision or derailment shall be padded with shock-absorbent material.

(d) *Cab securement.* Trainset interior cab doors shall be equipped with the following:

(1) A secure and operable device to lock the door from the outside that does not impede egress from the cab; and

(2) A securement device on each cab door that is capable of securing the door from inside of the cab.

(e) *Cab glazing serviceability.* End-facing cab windows of the lead trainset cab shall be free of cracks, breaks, or other conditions that obscure the view of the right-of-way for the crew from their normal position in the cab.

(f) *Floors of cabs, passageways, and compartments.* Floors of cabs, passageways, and compartments shall be kept free from oil, water, waste or any obstruction that creates a slipping, tripping or fire hazard. Floors shall be properly treated to provide secure footing.

(g) *Cab environmental control.* Each lead cab in a trainset shall be heated and air conditioned. The HVAC system shall be inspected and maintained to ensure that it operates properly and meets the railroad's performance standard which shall be defined in the inspection, testing, and maintenance program.

(h) *Trainset cab noise.* Performance standards for the railroad's trainsets—

(1) The average noise levels in the trainset cab shall be less than or equal to 85 dB(A) when the trainset is operating at maximum approved trainset speed as approved under § 299.609(g). Compliance with this paragraph (h)(1) shall be demonstrated during the pre-revenue service system integration testing as required by § 299.607.

(2) The railroad shall not make any alterations during maintenance or modifications to the cab, that cause the average sound level to exceed the requirements in paragraph (h)(1) of this section.

(3) The railroad or manufacturer shall follow the test protocols set forth in appendix B to this part to determine compliance with paragraph (h)(1) of this section, and, to the extent reasonably necessary to evaluate the effect of alterations during maintenance, to determine compliance with paragraph (h)(2) of this section.

(i) *Maintenance of trainset cabs.* (1) If the railroad receives an excessive noise report, and if the condition giving rise to the noise is not required to be immediately corrected under this part, the railroad shall maintain a record of the report, and repair or replace the item identified as substantially contributing to the noise:

(i) On or before the next periodic inspection required by the railroad's inspection, testing, and maintenance program under subpart G; or

(ii) If the railroad determines that the repair or replacement of the item requires significant shop or material resources that are not readily available, at the time of the next major equipment repair commonly used for the particular type of maintenance needed.

(2) The railroad has an obligation to respond to an excessive noise report that a trainset-cab-occupant files. The railroad meets its obligation to respond to an excessive noise report, as set forth in paragraph (i)(1) of this section, if the railroad makes a good faith effort to identify the cause of the reported noise, and where the railroad is successful in determining the cause, if the railroad repairs or replaces the items that cause the noise.

(3)(i) The railroad shall maintain a written or electronic record of any excessive noise report, inspection, test, maintenance, replacement, or repair completed pursuant to paragraph (i) of this section, and the date on which that inspection, test, maintenance, replacement, or repair occurred. If the railroad elects to maintain an electronic record, the railroad must satisfy the conditions listed in § 299.11.

(ii) The railroad shall retain these records for a period of one year.

(iii) The railroad shall establish an internal, auditable, monitorable system that contains these records.

(j) *Trainset sanitation facilities for employees.* Sanitation facilities shall be provided for crewmembers either:

(1) On the trainset, that meet otherwise applicable sanitation standards, which are accessible at frequent intervals during the course of their work shift; or

(2) Ready access to railroad-provided sanitation facilities outside of the trainset.

(k) *Speed indicators.* (1) Each trainset controlling cab shall be equipped with a speed indicator which is—

(i) Accurate within ±2 km/h (1.24 miles per hour) for speed lower than 30 km/h (18.6 miles per hour), then increasing linearly up to ±12 km/h (7.5 miles per hour) at 500 km/h (311 miles per hour); and

(ii) Clearly readable from the driver's normal position under all light conditions.

(2) The speed indicator shall be based on a system of independent on-board speed measurement sources guaranteeing the accuracy level specified in paragraph (a)(1) of this section under all operational conditions. The system shall be automatically monitored for inconsistencies and the driver shall be automatically notified of any inconsistency potentially compromising this accuracy level.

(3) The speed indicator shall be calibrated periodically as defined in the railroad's inspection, testing, and maintenance program.

(l) *Cab lights.* (1) Each trainset cab shall have cab lights which will provide sufficient illumination for the control instruments, meters, and gauges to enable the driver to make accurate readings from his or her normal positions in the cab. These lights shall be located, constructed, and maintained so that light shines only on those parts requiring illumination and does not interfere with the driver's vision of the track and signals. Each trainset cab shall also have a conveniently located light that can be readily turned on and off by the driver operating the trainset and that provides sufficient illumination for them to read trainset orders and timetables.

(2) Cab passageways and compartments shall be illuminated.

§ 299.433 Exterior lights.

(a) *Headlights.* Each leading end of a trainset shall be equipped with two or more headlights.

(1) Each headlight shall produce 80,000 candela.

(2) Headlights shall be arranged to illuminate signs in the right-of-way.

(3) Headlights shall be recognized 600 m (1,968 feet) ahead of the cab car by a driver in another trainset or a maintenance person standing in the right-of-way under clear weather conditions.

(b) *Taillights (marking devices).* (1) The trailing end of the trainset shall be equipped with two red taillights;

(2) Each taillight shall be located at least 1.2 m (3.9 feet) above rail;

(3) Each taillight shall be recognizable 200 m (656 feet) ahead of the cab car by a driver in another trainset or a maintenance person standing in the right-of-way under clear weather conditions;

(4) Taillights of the trailing end of the trainset shall be on when the trainset is in operation;

(5) Taillights shall not be on in the direction of trainset travel, except if the driver shall re-position the trainset in a station. Such re-positioning operations shall be done in accordance with the railroad's operating rules; and

(6) In an emergency situation, the headlight on the rear of the trainset may serve as the taillights in accordance with the railroad's operating rules.

§ 299.435 Electrical system design.

(a) *Overhead collector systems.* (1) Pantographs shall be so arranged that they can be operated from the driver's normal position in the cab. Pantographs that automatically rise when released shall have an automatic locking device to secure them in the down position.

(2) Each overhead collector system, including the pantograph, shall be equipped with a means to electrically ground any uninsulated parts to prevent the risk of electrical shock when working on the system.

(3) Means shall be provided to permit the driver to determine that the pantograph is in its lowest position, and for securing the pantograph if necessary, without the need to mount the roof of the trainset.

(4) Each trainset equipped with a pantograph operating on an overhead collection system shall also be equipped with a means to safely lower the pantograph in the event of an emergency. If an emergency pole is used for this purpose, that part of the pole which can be safely handled shall be marked to so indicate. This pole shall be protected from moisture and damage when not in use. Means of securement and electrical isolation of a damaged pantograph, when it cannot be performed automatically, shall be addressed in the railroad's operating rules.

(b) *Circuit protection.* (1) Each auxiliary circuit shall be provided with a circuit breaker or equivalent current-limiting devices located as near as practicable to the point of connection to the source of power for that circuit. Such protection may be omitted from circuits controlling safety-critical devices.

(2) The 25-kV main power line shall be protected with a lightning arrestor, automatic circuit breaker, and overload relay. The lightning arrestor shall be run by the most direct path possible to ground with a connection to ground of not less than No. 6 AWG. These overload protection devices shall be housed in an enclosure designed specifically for that purpose with the arc chute vented directly to outside air.

(3) Auxiliary power supply (440 VAC), providing power distribution, shall be provided with both overload and ground fault protection.

(c) *Main battery system.* (1) The main batteries shall be isolated from the cab and passenger seating areas by a non-combustible barrier.

(2) If batteries have the potential to vent explosive gases, the batteries shall be adequately ventilated to prevent accumulation of explosive concentrations of these gases.

(3) Battery chargers shall be designed to protect against overcharging.

(4) Battery circuits shall include an emergency battery cut-off switch to completely disconnect the energy stored in the batteries from the load.

(d) *Capacitors for high-energy storage.* (1) Capacitors, if provided, shall be isolated from the cab and passenger seating areas by a non-combustible barrier.

(2) Capacitors shall be designed to protect against overcharging and overheating.

(e) *Electromagnetic interference (EMI) and electromagnetic compatibility (EMC).* (1) The railroad shall ensure electromagnetic compatibility of the safety-critical equipment systems with their environment. Electromagnetic compatibility can be achieved through equipment design or changes to the operating environment.

(2) The electronic equipment shall not produce electrical noise that interferes with trainline control and communications or with wayside signaling systems.

(3) To contain electromagnetic interference emissions, suppression of transients shall be at the source wherever possible.

(4) Electrical and electronic systems of equipment shall be capable of operation in the presence of external electromagnetic noise sources.

(5) All electronic equipment shall be self-protected from damage or improper operation, or both, due to high voltage transients and long-term over-voltage or under-voltage conditions. This includes protection from both power frequency and harmonic effects as well as protection from radio frequency signals into the microwave frequency range.

(f) *Insulation or grounding of metal parts.* All unguarded noncurrent-carrying metal parts subject to becoming charged shall be grounded or thoroughly insulated.

(g) *High voltage markings: doors, cover plates, or barriers.* External surfaces of all doors, cover plates, or barriers providing direct access to high voltage equipment shall be conspicuously and legibly marked ''DANGER–HIGH VOLTAGE'' or with the word ''DANGER'' and the normal voltage carried by the parts so protected. Labels shall be retro-reflective.

(h) *Hand-operated switches.* All hand-operated switches carrying currents with a potential of more than 150 volts that may be operated while under load shall be covered and shall be operative from the outside of the cover. Means shall be provided to show whether the switches are open or closed. Switches that should not be operated while under load shall be conspicuously and legibly marked with the words ''must not be operated under load'' and the voltage carried.

(i) *Conductors; jumpers; cable connections.* (1) Conductor sizes shall be selected on the basis of current-carrying capacity, mechanical strength, temperature, flexibility requirements, and maximum allowable voltage drop. Current-carrying capacity shall be derated for grouping and for operating temperature.

(2) Jumpers and cable connections between trainset units shall be located and guarded to provide sufficient vertical clearance. They may not hang with one end free.

(3) Cable and jumper connections between trainset units may not have any of the following conditions:

(i) Broken or badly chafed insulation;

(ii) Broken plugs, receptacles, terminals, or trainline pins; and

(iii) Broken or protruding strands of wire.

(j) *Traction motors.* All traction motors shall be in proper working order, or safely cut-out.

§ 299.437 Automated monitoring.

(a) Each trainset shall be equipped to monitor the performance of the following systems or components:

(1) Reception of cab and trainset control signals;

(2) Electric brake status;

(3) Friction brake status;

(4) Fire detection systems, if so equipped;

(5) Auxiliary power status;

(6) Wheelslide;

(7) On-board bearing-temperature sensors;

(8) Door open/closed status; and

(9) Bogie vibration detection.

(b) When any of the monitored parameters are out of predetermined

limits, an alert shall be sent immediately to the driver. The railroad's operating rules shall control trainset movement when the monitored parameters are out of predetermined limits.

(c) The railroad shall develop appropriate operating rules to address driver and equipment performance in the event that the automatic monitoring system becomes defective.

(d) The monitoring system shall be designed with an automatic self-test feature that notifies the driver that the monitoring capability is functioning correctly and alerts the driver when a system failure occurs.

§ 299.439 Event recorders.

(a) *Duty to equip and record.* Each trainset shall be equipped with an operative event recorder that monitors and records as a minimum all safety data required by paragraph (b) of this section. The event recorder shall record the most recent 48 hours of operational data of the trainset on which it is installed.

(b) *Equipment requirements.* Event recorders shall monitor and record data elements or information needed to support the data elements required by paragraph (c) of this section. The data shall be recorded with at least the accuracy required of the indicators displaying any of the required data elements to the driver.

(c) *Data elements.* The event recorder shall be equipped with a certified crashworthy event recorder memory module that meets the requirements of appendix A to this part. The certified event recorder memory module shall be mounted for its maximum protection. The event recorder shall record, and the certified crashworthy event recorder memory module shall retain, the following data elements or information needed to support the data elements:

(1) Trainset speed;

(2) Selected direction of motion;

(3) Date and time;

(4) Distance traveled;

(5) Throttle position;

(6) Applications and operations of the trainset brake system, including urgent and emergency applications. The system shall record, or provide a means of determining, that a brake application or release resulted from manipulation of brake controls at the position normally occupied by the driver. In the case of a brake application or release that is responsive to a command originating from or executed by an on-board computer (*e.g.,* electronic braking system controller, controlling cab electronic control system, or trainset control computer), the system shall record, or provide a means of determining, the involvement of any such computer;

(7) Applications and operations of the regenerative brake;

(8) Cab signal aspect(s);

(9) Urgent brake application(s);

(10) Passenger brake alarm request;

(11) Wheel slip/slide alarm activation (with a property-specific minimum duration);

(12) Trainset number;

(13) Trainset tractive effort (positive and negative);

(14) Trainset brake cylinder pressures;

(15) Cruise control on/off, if so equipped and used;

(16) Bogie vibration detection;

(17) Door status opened/closed; and

(18) Safety-critical trainset control data routed to the controlling driver's display with which the driver is required to comply, specifically including text messages conveying mandatory directives and maximum authorized speed. The specific information format, content, and proposed duration for retention of such data shall be specified in the PTC Safety Plan submitted for the trainset control system under subpart B, subject to FRA approval. If it can be calibrated against other data required by this part, such trainset control data may, at the election of the railroad, be retained in a separate certified crashworthy memory module.

(d) *Response to defective equipment.* A trainset on which the event recorder has been taken out of service may remain in-service only until the next pre-service inspection. A trainset with an inoperative event recorder is not deemed to be in improper condition, unsafe to operate, or a non-complying trainset under § 299.447.

(e) *Annual tests.* (1) The railroad's inspection, testing, and maintenance program under subpart G of this part shall require annual testing of the event recorder. All testing under this section shall be performed at intervals that do not exceed 368 calendar days.

(2) A microprocessor-based event recorder with a self-monitoring feature equipped to verify that all data elements required by this part are recorded, requires further maintenance and testing only if either of the following conditions exist:

(i) The self-monitoring feature displays an indication of a failure. If a failure is displayed, further maintenance and testing must be performed until a subsequent test is successful. When a successful test is accomplished, a record, in any medium, shall be made of that fact and of any maintenance work necessary to achieve the successful result. This record shall be available at the location where the trainset is maintained until a record of a subsequent successful test is filed; or

(ii) A download of the event recorder, taken within the preceding 30 days and reviewed for the previous 48 hours of trainset operation, reveals a failure to record a regularly recurring data element or reveals that any required data element is not representative of the actual operations of the trainset during this time period. If the review is not successful, further maintenance and testing shall be performed until a subsequent test is successful. When a successful test is accomplished, a record, in any medium, shall be made of that fact and of any maintenance work necessary to achieve the successful result. This record shall be kept at the location where the trainset is maintained until a record of a subsequent successful test is filed. The download shall be taken from information stored in the certified crashworthy crash hardened event recorder memory module.

(f) *Preserving accident data.* If any trainset equipped with an event recorder, or any other trainset mounted recording device or devices designed to record information concerning the functioning of a trainset, is involved in an accident/incident that is required to be reported to FRA under part 225 of this chapter, the railroad shall, to the extent possible, and to the extent consistent with the safety of life and property, preserve the data recorded by each such device for analysis by FRA in accordance with § 299.11. This preservation requirement permits the railroad to extract and analyze such data, provided the original downloaded data file, or an unanalyzed exact copy of it, shall be retained in secure custody and shall not be utilized for analysis or any other purpose except by direction of FRA or the National Transportation Safety Board. This preservation requirement shall expire one (1) year after the date of the accident/incident unless FRA or the Board notifies the railroad in writing that the data are desired for analysis.

(g) *Relationship to other laws.* Nothing in this section is intended to alter the legal authority of law enforcement officials investigating potential violation(s) of Federal or State criminal law(s), and nothing in this chapter is intended to alter in any way the priority of National Transportation Safety Board investigations under 49 U.S.C. 1131 and 1134, nor the authority of the Secretary of Transportation to investigate railroad accidents under 49 U.S.C. 5121, 5122, 20107, 20111, 20112, 20505, 20702, 20703, and 20902.

(h) *Disabling event recorders.* Any individual who willfully disables an event recorder, or who tampers with or alters the data recorded by such a device is subject to civil penalty as provided in part 218 of this chapter, and to disqualification from performing safety-sensitive functions on a railroad under subpart D of part 209 of this chapter.

§ 299.441 Trainset electronic hardware and software safety.

(a) *Purpose and scope.* The requirements of this section apply to all safety-critical electronic control systems, subsystems, and components on the trainsets, except for on-board signaling and trainset control system components that must meet the software safety requirements defined in subpart B of this part.

(b) *Applicability.* (1) The trainsets shall utilize the service-proven safety-critical electronic control systems, subsystems, and components as used on the N700 to control and monitor safety-critical components.

(2) Any modifications to the existing service-proven safety-critical electronic control systems, subsystems, and components shall be subject to the requirements defined in paragraph (c) of this section.

(i) The railroad shall assure that the suppliers of new or modified safety-critical systems, subsystems, and components utilize an industry recognized hardware and software development process which is evaluated and certified by an independent third-party assessor authorized by the industry standard utilized.

(ii) The railroad shall require that all suppliers submit the certifications and audit results as applicable. All such certifications shall be made available to FRA upon request.

(3) Any major upgrades or introduction of new safety-critical technology shall be subject to § 299.613(d).

(c) *Electronic hardware and software safety program.* The railroad shall develop and maintain a written electronic hardware and software safety program to guide the design, development, testing, integration, and verification of all new or modified safety-critical trainset hardware and software.

(1) *Hardware and software safety program description.* The hardware and software safety program shall include a description of how the following will be implemented to ensure safety and reliability:

(i) The hardware and software design process;

(ii) The hardware and software design documentation;

(iii) The hardware and software hazard analysis;

(iv) Hardware and software safety reviews;

(v) Hardware and software hazard monitoring and tracking;

(vi) Hardware and software integration safety testing;

(vii) Demonstration of overall hardware and software system safety as part of the pre-revenue service testing of the equipment; and

(viii) Safety-critical changes and failures.

(2) *Safety analysis.* The hardware and software safety program shall be based on a formal safety methodology that includes a FMECA; verification and validation testing for all hardware and software components and their interfaces; and comprehensive hardware and software integration testing to ensure that the hardware and software system functions as intended.

(3) *Compliance.* The railroad shall comply with the elements of its hardware and software safety program that affect the safety of the passenger trainset.

(4) *Safety-critical changes and failures.* Whenever a planned safety-critical design change is made to the safety-critical electronic control systems, subsystems and components (the products) that are in use by the railroad and subject to this subpart, the railroad shall—

(i) Notify FRA in accordance with § 299.9 of the design changes made by the product supplier;

(ii) Ensure that the safety analysis required under paragraph (c)(2) of this section is updated as required;

(iii) Conduct all safety-critical changes in a manner that allows the change to be audited;

(iv) Document all arrangements with suppliers for notification of all electronic safety-critical changes as well as safety-critical failures in the supplier's system, subsystem, or components, and the reasons for that change or failure from the suppliers, whether or not the railroad has experienced a failure of that safety-critical system, sub-system, or component;

(v) Specify the railroad's procedures for action upon receipt of notification of a safety-critical change or failure of an electronic system, sub-system, or component, and until the upgrade or revision has been installed;

(vi) Identify all configuration/revision control measures designed to ensure that safety-functional requirements and safety-critical hazard mitigation processes are not compromised as a result of any such change, and that any such change can be audited;

(vii) Require suppliers to provide notification of all electronic safety-critical changes as well as safety-critical failures in the supplier's system, subsystem, or components;

(ix) Document all arrangements with suppliers for notification of any and all electronic safety-critical changes as well as safety-critical failures in the supplier's system, subsystem, or components.

(d) *Specific requirements.* Hardware and software that controls or monitors a trainset's primary braking system shall either—

(1) Fail safely by initiating an emergency or urgent brake application in the event of a hardware or software failure that could impair the ability of the driver to apply or release the brakes; or

(2) Provide the driver access to direct manual control of the primary braking system (emergency or urgent braking).

(e) *Inspection, testing, and maintenance records.* The inspection, testing, and maintenance conducted by the railroad in accordance with § 299.445 shall be recorded in hardcopy or stored electronically. Electronic recordkeeping or automated tracking systems, subject to the provisions contained in § 299.11, may be utilized to store and maintain any testing or training record required by this subpart. Results of product testing conducted by a vendor in support of a safety analysis shall be provided to and recorded by the railroad.

(1) The testing records shall contain all of the following:

(i) The name of the railroad;

(ii) The location and date that the test was conducted;

(iii) The equipment tested;

(iv) The results of tests;

(v) The repairs or replacement of equipment;

(vi) Any preventative adjustments made; and

(vii) The condition in which the equipment is left.

(2) Each record shall be—

(i) Signed by the employee conducting the test, or electronically coded, or identified by the automated test equipment number;

(ii) Filed in the office of a supervisory official having jurisdiction, unless otherwise noted; and

(iii) Available for inspection and copying by FRA.

(3) The results of the testing conducted in accordance with this section shall be retained as follows:

(i) The results of tests that pertain to installation or modification of a product

shall be retained for the life-cycle of the product tested and may be kept in any office designated by the railroad;

(ii) The results of periodic tests required for the maintenance or repair of the product tested shall be retained until the next record is filed and in no case less than one year; and

(iii) The results of all other tests and training shall be retained until the next record is filed and in no case less than one year.

(f) *Review of safety analysis.* (1) Prior to the initial planned use of a new product as defined by paragraphs (b)(2) or (3) of this section, the railroad shall notify FRA in accordance with § 299.9 of the intent to place this product in service. The notification shall provide a description of the product, and identify the location where the complete safety analysis documentation and the testing are maintained.

(2) The railroad shall maintain and make available to FRA upon request all railroad or vendor documentation used to demonstrate that the product meets the safety requirements of the safety analysis for the life-cycle of the product.

(g) *Hazard tracking.* After a new product is placed in service in accordance with paragraphs (b)(2) or (3) of this section, the railroad shall maintain a database of all safety-relevant hazards encountered with the product. The database shall include all hazards identified in the safety analysis and those that had not been previously identified in the safety analysis. If the frequency of the safety-relevant hazards exceeds the threshold set forth in the safety analysis, then the railroad shall—

(1) Report the inconsistency to the Associate Administrator, within 15 days of discovery in accordance with § 299.9;

(2) Take immediate countermeasures to reduce the frequency of the safety-relevant hazard(s) below the threshold set forth in the safety analysis;

(3) Provide a final report to the Associate Administrator, on the results of the analysis and countermeasures taken to mitigate the hazard to meet the threshold set forth in the safety analysis when the problem is resolved. For hazards not identified in the safety analysis the threshold shall be exceeded at one occurrence; and

(4) Electronic or automated tracking systems used to meet the requirements contained in paragraph (g) of this section shall be in accordance with § 299.11.

(h) *Operations and maintenance manual.* The railroad shall maintain all supplier or vendor documents pertaining to the operation, installation, maintenance, repair, modification, inspection, and testing of the safety-critical electronic control systems, subsystems and components.

(i) *Training and qualification program.* Under § 299.13(c)(3), the railroad shall establish and implement a training and qualification program for the safety-critical electronic control systems, subsystems, and components subject to subpart G of this part prior to the safety-critical electronic control systems, subsystems, and components being placed in use.

(j) *Operating personnel training.* The training program required by § 299.13(c)(3) for any driver or other person who participates in the operation of a trainset using the safety-critical electronic control systems, subsystems and components shall address all the following elements:

(1) Familiarization with the electronic control system equipment on-board the trainset and the functioning of that equipment as part of the system and in relation to other on-board systems under that person's control;

(2) Any actions required of the operating personnel to enable or enter data into the system and the role of that function in the safe operation of the trainset;

(3) Sequencing of interventions by the system, including notification, enforcement, and recovery from the enforcement as applicable;

(4) Railroad operating rules applicable to control systems, including provisions for movement and protection of any unequipped passenger equipment, or passenger equipment with failed or cut-out controls;

(5) Means to detect deviations from proper functioning of on-board electronic control system equipment and instructions explaining the proper response to be taken regarding control of the trainset and notification of designated railroad personnel; and

(6) Information needed to prevent unintentional interference with the proper functioning of on-board electronic control equipment.

§ 299.443 Safety appliances.

(a) *Couplers.* (1) The leading and trailing ends of each trainset shall be equipped with an automatic rescue coupler that couples on impact.

(i) Uncoupling of the rescue coupler shall be done only at a trainset maintenance facility or other location where personnel can safely get under or between units.

(ii) The leading and the trailing ends of a trainset are not required to be equipped with sill steps or end or side handholds.

(2) The leading and trailing end couplers and uncoupling devices may be stored within a removable shrouded housing.

(3) Leading and trailing automatic couplers of trainsets shall be compatible with the railroad's rescue vehicles. A coupler adaptor can be used to meet this requirement.

(4) The railroad shall develop and implement rescue procedures that assure employee safety during rescue operations and shall be contained in the railroad's operating rules.

(5) Each unit within a trainset shall be semi-permanently coupled and shall only be uncoupled at a trainset maintenance facility or other locations identified by the railroad where the protections afforded in subpart B of part 218 of this chapter can be applied.

(6) The ends of units in a trainset that are semi-permanently coupled are not required to be equipped with automatic couplers, sill steps, end handholds or side handholds.

(b) *Crew access.* (1) Each trainset shall provide a minimum of two (2) locations per side, where crew members can board or disembark the trainset safely from ground level.

(2) Each location used for crew access shall be equipped with retractable stairs with handrails designed for safe access to the trainset from ground level.

§ 299.445 Trainset inspection, testing, and maintenance requirements.

(a) *General.* (1) The railroad shall develop a written inspection program for the rolling stock, in accordance with and approved under the requirements of § 299.713. As further specified in this section, the program shall describe in detail the procedures, equipment, and other means necessary for the safe operation of the passenger equipment, including all inspections set forth in paragraph (e) of this section. This information shall include a detailed description of the methods of ensuring accurate records of required inspections.

(2) The initial inspection, testing, and maintenance program submitted under § 299.713 shall, as a minimum, address the specific safety inspections contained in paragraphs (e)(1) through (4) of this section. The railroad may submit the procedures detailing the bogie inspections or general overhaul requirements contained in paragraph (e)(3) and (4) of this section, respectively, at a later date than the initial inspection, testing, and maintenance program, but not less than 180 days prior to the scheduled date of the first bogie inspection or general overhaul.

(b) *Identification of safety-critical items.* In addition to safety critical items identified under § 299.711(b), on-board

emergency equipment, emergency back-up systems, trainset exits and trainset safety-critical hardware and software systems in accordance with § 299.441 shall be deemed safety-critical.

(c) *Compliance.* The railroad shall adopt and comply with the approved inspection, testing, and maintenance program in accordance with § 299.703.

(d) *General condition.* The inspection, testing, and maintenance program shall ensure that all systems and components of the equipment are free of conditions that endanger the safety of the crew, passengers, or equipment. These conditions include, but are not limited to the following:

(1) A continuous accumulation of oil or grease;

(2) Improper functioning of a component;

(3) A crack, break, excessive wear, structural defect, or weakness of a component;

(4) A leak;

(5) Use of a component or system under conditions that exceed those for which the component or system is designed to operate; and

(6) Insecure attachment of a component.

(e) *Specific safety inspections.* The program under paragraph (a) of this section shall specify that all passenger trainsets shall receive thorough safety inspections by qualified individuals designated by the railroad at regular intervals. At a minimum, and in addition to the annual tests required for event recorder under § 299.439(e), the following shall be performed on each trainset:

(1) *Pre-service inspections.* (i) Each trainset in use shall be inspected at least once every two calendar days by qualified individuals at a location where there is a repair pit and access to the top of the trainset. The inspection shall verify the correct operation of on-board safety systems defined in the inspection, testing, and maintenance program. If any of the conditions defined as safety-critical in paragraph (b) of this section and § 299.711(b) are found during this inspection, the trainset shall not be put into service until that condition is rectified. The pre-service inspection shall include the following:

(A) Functional tests to determine the status of application and release of the service, emergency, and urgent air brakes using the monitoring system;

(B) Operational tests of the exterior doors; and

(C) A review of the log of on-board ATC equipment.

(ii) If the existence of any safety-critical conditions cannot be determined by use of an automated monitoring system, the railroad shall perform a visual inspection to determine if the condition exists.

(2) *Regular inspections.* The railroad shall perform a regular inspection on all trainsets in accordance with the test procedures and inspection criteria established in paragraph (a) of this section and at the intervals defined by paragraph (f) of this section. If any of the conditions defined as safety-critical in paragraph (b) of this section and § 299.711(b) are found during this inspection, the trainset shall not be put into service until that condition is rectified.

(3) *Bogie inspections.* The railroad shall perform a bogie inspection on all trainsets in accordance with the test procedures and inspection criteria established in paragraph (a) of this section and at the intervals defined by paragraph (f) of this section. If any of the conditions defined as safety-critical in paragraph (b) of this section and § 299.711(b) are found during this inspection, the trainset shall not be put into service until that condition is rectified.

(4) *General overhaul.* The railroad shall perform a general overhaul on all trainsets in accordance with the test procedures and inspection criteria established in paragraph (a) of this section and at the intervals defined by paragraph (f) of this section. If any of the conditions defined as safety-critical in paragraph (b) of this section and § 299.711(b) are found during this inspection, the trainset shall not be put into service until that condition is rectified.

(f) *Maintenance intervals.* The railroad's program established pursuant to paragraph (a) of this section shall include the railroad's scheduled maintenance intervals for all specific safety inspections in paragraph (e) of this section, as required by § 299.707.

(g) *Training and qualification program.* The railroad shall establish a training and qualification program as defined in § 299.13(c)(3) to qualify individuals to perform inspections, testing, and maintenance on the equipment. Only qualified individuals shall perform inspections, testing, and maintenance of the equipment.

(h) *Reporting and tracking of repairs to defective trainsets.* The railroad shall have in place prior to start of operations a reporting and tracking system for passenger trainsets with a defect not in conformance with this subpart. The reporting and tracking system shall record the following information:

(1) The identification number of the defective unit within a trainset, and trainset identification number;

(2) The date the defect was discovered;

(3) The nature of the defect;

(4) The determination made by a qualified individual whether the equipment is safe to run;

(5) The name of the qualified individual making such a determination;

(6) Any operating restrictions placed on the equipment; and

(7) Repairs made and the date that they were completed.

(i) *Retention of records.* At a minimum, the railroad shall keep the records described in paragraph (j) of each required inspection under this section in accordance with § 299.11. Each record shall be maintained for at least one year from the date of the inspection.

(j) *Availability of records.* The railroad shall make defect reporting and tracking records available to FRA upon request.

(k) *Brake system repair points.* The railroad shall designate brake system repair points in the inspection, testing, and maintenance program required by paragraph (a) of this section. No trainset shall depart a brake system repair point unless that trainset has a 100 percent operational brake system.

§ 299.447 Movement of defective equipment.

(a) A trainset with one or more conditions not in compliance with the list of safety critical defects identified in accordance with § 299.445(b) during a pre-service inspection required by § 299.445(e)(1) shall not be moved in revenue service and shall only be moved in accordance with paragraph (e) of this section.

(b) Except as provided in paragraph (c) of this section, and after departure in compliance with the pre-service inspection required by § 299.445(e)(1), a trainset with one or more conditions not in compliance with the list of safety critical defects identified in accordance with §§ 299.445(b) and 299.711(b) may be moved in revenue service only after the railroad has complied with all of the following:

(1) A qualified individual determines that it is safe to move the trainset, consistent with the railroad's operating rules;

(i) If appropriate, these determinations may be made based upon a description of the defective condition provided by a crewmember.

(ii) If the determinations required by this paragraph are made by an off-site qualified individual based on a description of the defective condition by on-site personnel, then a qualified individual shall perform a physical

inspection of the defective equipment, at the first location possible, in accordance with the railroad's inspection, testing, and maintenance program and operating rules, to verify the description of the defect provided by the on-site personnel.

(2) The qualified individual who made the determination in paragraph (b)(1) of this section, notifies the driver in charge of movement of the trainset, in accordance with the railroad's operating rules, of the maximum authorized speed, authorized destination, and any other operational restrictions that apply to the movement of the non-compliant trainset. This notification may be achieved through the tag required by paragraph (b)(3) of this section; and

(3) A tag bearing the words ''non-complying trainset'' and containing the following information, are securely attached to the control stand on each control cab of the trainset:

(i) The trainset number and unit or car number;

(ii) The name of the qualified individual making the determination in paragraph (b)(1) of this section;

(iii) The location and date of the inspection that led to the discovery of the non-compliant item;

(iv) A description of each defect;

(v) Movement restrictions, if any;

(vi) The authorized destination of the trainset; and

(vii) The signature, if possible, as well as the job title and location of the person making the determinations required by this section.

(4) Automated tracking systems used to meet the tagging requirements contained in paragraph (b)(3) of this section may be reviewed and monitored by FRA at any time to ensure the integrity of the system. FRA's Associate Administrator may prohibit or revoke the railroad's ability to utilize an automated tracking system in lieu of tagging if FRA finds that the automated tracking system is not properly secure, is inaccessible to FRA or the railroad's employees, or fails to track or monitor the movement of defective equipment adequately. Such a determination will be made in writing and will state the basis for such action.

(c) A trainset that develops a non-complying condition in service may continue in revenue service, so long as the requirements of paragraph (b) of this section are otherwise fully met, until the next pre-service inspection.

(d) In the event of an in-service failure of the braking system, the trainset may proceed in accordance with the railroad's operating rules relating to the percentage of operative brakes and at a speed no greater than the maximum authorized speed as determined by § 299.409(f)(4) so long as the requirements of paragraph (b) of this section are otherwise fully met, until the next pre-service inspection.

(e) A non-complying trainset may be moved without passengers within a trainset maintenance facility, at speeds not to exceed 16 km/h (10 mph), without meeting the requirements of paragraph (a) of this section where the movement is solely for the purpose of repair. The railroad shall ensure that the movement is made safely.

(f) Nothing in this section authorizes the movement of equipment subject to a Special Notice for Repair under part 216 of this chapter unless the movement is made in accordance with the restrictions contained in the Special Notice.

Subpart E—Operating Rules

§ 299.501 Purpose.

Through the requirements of this subpart, FRA learns the condition of the operating rules and practices in use by the railroad. The rules and practices covered by this subpart include the procedures for instruction and testing of all employees involved with the movement of rail vehicles, including drivers, on-board attendants, station platform attendants, general control center staff, and all maintenance staff, which are necessary to ensure that they possess the requisite skill and knowledge of the rules and operating practices to maintain the safety of the system.

§ 299.503 Operating rules; filing and recordkeeping.

(a) Prior to commencing operations, the railroad shall develop a code of operating rules, timetables, and timetable special instructions. The initial code of operating rules, timetables, and timetable special instructions shall be based on practices and procedures proven on the Tokaido Shinkansen system.

(b) The railroad shall keep one copy of its current code of operating rules, timetables, timetable special instruction, at its system headquarters, and shall make them available to FRA for inspection and copying during normal business hours. If the railroad elects to maintain an electronic record, the railroad must satisfy the conditions listed in § 299.11.

§ 299.505 Programs of operational tests and inspections; recordkeeping.

(a) *Requirement to conduct operational tests and inspections.* The railroad shall periodically conduct operational tests and inspections to determine the extent of employee knowledge, application, and compliance with its code of operating rules, timetables, and timetable special instructions in accordance with a written program retained at its system headquarters.

(b) *Railroad and railroad testing officer responsibilities.* (1) Each railroad officer who conducts operational tests and inspections (railroad testing officer) shall—

(i) Be qualified on the railroad's operating rules in accordance with § 299.507;

(ii) Be qualified on the operational testing and inspection program requirements and procedures relevant to the testing and inspections the officer will conduct;

(iii) Receive appropriate field training, as necessary to achieve proficiency, on each operational test or inspection that the officer is authorized to conduct; and

(iv) Conduct operational tests and inspections in accordance with the railroad's program of operational tests and inspections.

(2) The railroad shall maintain a record documenting qualification of each railroad testing officer. The record shall be retained by the railroad and shall be made available to representatives of the FRA for inspection and copying during normal business hours. If the railroad elects to maintain an electronic record, the railroad must satisfy the conditions listed in § 299.11.

(c) *Written program of operational tests and inspections.* Within 30 days of commencing operations, the railroad shall have a written program of operational tests and inspections in effect. The railroad shall maintain one copy of its current program for periodic performance of the operational tests and inspections required by paragraph (a) of this section, and shall maintain one copy of each subsequent amendment to the program as amendments are made. These records shall be retained at the system headquarters of the railroad for three calendar years after the end of the calendar year to which they relate. These records shall be made available to representatives of the FRA for inspection and copying during normal business hours. The program shall—

(1) Provide for operational testing and inspection under the various operating conditions on the railroad;

(2) Describe each type of operational test and inspection adopted, including the means and procedures used to carry it out;

(3) State the purpose of each type of operational test and inspection;

(4) State the frequency with which each type of operational test and inspection is conducted;

(5) The program shall address with particular emphasis those operating rules that cause or are likely to cause the most accidents or incidents, such as those accidents or incidents identified in the six-month reviews and the annual summaries as required under paragraphs (e) and (f) of this section;

(6) Identify the officer(s) by name and job title responsible for ensuring that the program of operational tests and inspections is properly implemented and is responsible for overseeing the entire program. The responsibilities of such officer(s) shall include, but not be limited to, ensuring that the railroad's testing officers are directing their efforts in an appropriate manner to reduce accidents/incidents and that all required reviews and summaries are completed; and

(7) Include a schedule for making the program fully operative within 210 days after it begins.

(d) *Records.* (1) The railroad shall keep a written or electronic record of the date, time, place, and result of each operational test and inspection that was performed in accordance with its program. Each record shall specify the officer administering the test and inspection and each employee tested. These records shall be retained at the system headquarters of the railroad for one calendar year after the end of the calendar year to which they relate. These records shall be made available to representatives of the FRA for inspection and copying during normal business hours.

(2) The railroad shall retain one copy of its current program for periodic performance of the operational tests and inspections required by paragraph (a) of this section and one copy of each subsequent amendment to such program. These records shall be retained for three calendar years after the end of the calendar year to which they relate at the system headquarters where the tests and inspections are conducted. These records shall be made available to representatives of the FRA for inspection and copying during normal business hours.

(e) *Reviews of tests and inspections and adjustments to the program of operational tests*—(1) *Reviews by the railroad.* Not less than once every 180 days the railroad's designated officer(s) shall conduct periodic reviews and analyses as provided in this paragraph and shall retain, at its system headquarters, one copy of the reviews. Each such review shall be completed within 30 days of the close of the period. The designated officer(s) shall conduct a written review of—

(i) The operational testing and inspection data for the system to determine compliance by the railroad testing officers with its program of operational tests and inspections required by paragraph (c) of this section. At a minimum, this review shall include the name of each railroad testing officer, the number of tests and inspections conducted by each officer, and whether the officer conducted the minimum number of each type of test or inspection required by the railroad's program;

(ii) Accident/incident data, the results of prior operational tests and inspections, and other pertinent safety data for the system to identify the relevant operating rules related to those accidents/incidents that occurred during the period. Based upon the results of that review, the designated officer(s) shall make any necessary adjustments to the tests and inspections required of railroad officers for the subsequent period(s); and

(iii) Implementation of the program of operational tests and inspections from a system perspective, to ensure that it is being utilized as intended, that the other reviews provided for in this paragraph have been properly completed, that appropriate adjustments have been made to the distribution of tests and inspections required, and that the railroad testing officers are appropriately directing their efforts.

(2) *Records retention.* The records of reviews required in paragraphs (e)(1) of this section shall be retained for a period of one year after the end of the calendar year to which they relate and shall be made available to representatives of FRA for inspection and copying during normal business hours.

(f) *Annual summary on operational tests and inspections.* Before March 1 of each calendar year, the railroad shall retain, at its system headquarters, one copy of a written summary of the following with respect to its previous year's activities: The number, type, and result of each operational test and inspection that was conducted as required by paragraphs (a) and (c) of this section. These records shall be retained for three calendar years after the end of the calendar year to which they relate and shall be made available to representatives of FRA for inspection and copying during normal business hours.

(g) *Electronic recordkeeping.* Nothing in this section precludes the railroad from maintaining the information required to be retained under this part in an electronic format provided that the railroad satisfy the conditions listed in § 299.11.

(h) *Disapproval of program.* Upon review of the program of operational tests and inspections required by this section, the Associate Administrator for Safety may, for cause stated, disapprove the program in whole or in part. Notification of such disapproval shall be made in writing and specify the basis for the disapproval decision. If the Associate Administrator for Safety disapproves the program—

(1) The railroad has 35 days from the date of the written notification of such disapproval to—

(i) Amend its program; or

(ii) Provide a written response in support of the program to the Associate Administrator for Safety. If the Associate Administrator for Safety still disapproves the program in whole or in part after receiving the railroad's written response, the railroad shall amend its program.

(2) A failure to adequately amend the program will be considered a failure to implement a program under this subpart.

§ 299.507 Program of instruction on operating rules; recordkeeping.

(a) To ensure that each railroad employee whose activities are governed by the railroad's operating rules understands those rules, the railroad periodically shall instruct each such employee on the meaning and application of its operating rules with a written program developed under § 299.13(c)(3) and retained at its system headquarters.

(b) Prior to commencing operations, the railroad shall file and retain one copy of its current program for the periodic instruction of its employees as required by paragraph (a) of this section and shall file and retain one copy of any amendment to that program as amendments are made. These records shall be retained at the railroad's system headquarters for one calendar year after the end of the calendar year to which they relate. These records shall be made available to representatives of the FRA for inspection and copying during normal business hours. This program shall—

(1) Describe the means and procedures used for instruction of the various classes of affected employees;

(2) State the frequency of instruction and the basis for determining that frequency;

(3) Include a schedule for completing the initial instruction of employees who are already employed when the program begins;

(4) Begin on the date of commencing operations; and

(5) Provide for initial instruction of each employee hired after the program begins.

(c) The railroad is authorized to retain by electronic recordkeeping its program for periodic instruction of its employees on operating rules, provided that the requirements stated in § 299.11 are satisfied.

Subpart F—System Qualification Tests

§ 299.601 Responsibility for verification demonstrations and tests.

The railroad shall comply with the pre-revenue qualification tests and verification requirements set forth in this subpart to demonstrate the overall safety of the system, prior to revenue operations.

§ 299.603 Preparation of system-wide qualification test plan.

(a) Prior to execution of any tests as defined in this subpart, the railroad shall develop a system-wide qualification test plan, that identifies the tests that will be carried out, to demonstrate the operability of all system elements, including track and infrastructure, signal and trainset control system, communications, rolling stock, software, and operating practices, and the system as a whole.

(b) The system-wide qualification test plan shall be submitted to FRA in accordance with § 299.9 for review at least 180 days prior to testing. FRA shall notify the railroad, in writing, within 45 days of receipt of the railroad's submission, and identify any deficiencies in the test plan. FRA will notify the railroad of any procedures to be submitted for review. The plan shall include the following:

(1) A list of all tests to be conducted;

(2) A summary statement of the test objectives;

(3) A planned schedule for conducting the tests which indicates the sequence of testing and interdependencies; and

(4) The approach taken for—

(i) Verifying results of installation tests performed by contractors and manufacturers;

(ii) Functional and performance qualification testing of individual safety-related equipment, facilities, and subsystems in accordance with § 299.605;

(iii) Pre-revenue service system integration testing of the system per § 299.607, that includes vehicle/track system qualification testing per § 299.609;

(iv) Simulated revenue operations of the system per § 299.611;

(v) Compliance with operating rules as per subpart E of this part;

(vi) Training and qualification of all personnel involved in the test program to conduct tests safely and in accordance with operating rules;

(vii) Verification of all emergency preparedness procedures; and

(viii) Field testing of the railroad's uncertified PTC system and regression testing of its FRA-certified PTC system, under § 299.201.

(c) The railroad shall adopt and comply with the system-wide qualification test plan, including completion of all tests required by the plan.

(d) After FRA review of the system-wide test plan, detailed test procedures as required by paragraph (b) of this section shall be submitted 15 days prior to testing to FRA in accordance with § 299.9 for review.

(e) Each test procedure shall include the following elements:

(1) A clear statement of the test objectives. One of the principal test objectives shall be to demonstrate that the railroad's system meets the safety design and performance requirements specified in this part when operated in the environment in which it will be used;

(2) Any special safety precautions to be observed during the testing;

(3) A description of the railroad property or facilities to be used to conduct the tests;

(4) Prerequisites for conducting each test;

(5) A detailed description of how the tests are to be conducted. This description shall include—

(i) An identification of the systems and equipment to be tested;

(ii) The method by which the systems and equipment shall be tested;

(iii) The instrumentation to be used and calibration procedures;

(iv) The means by which the test results will be recorded, analyzed and reported to FRA;

(v) A description of the information or data to be obtained;

(vi) A description of how the information or data obtained is to be analyzed or used;

(vii) A description of any criteria to be used as safety limits during the testing;

(viii) The criteria to be used to evaluate performance of the systems and equipment. If system qualification is to be based on extrapolation of less than full-level testing results, the analysis done to justify the validity of the extrapolation shall be described; and

(ix) Inspection, testing, and maintenance procedures to be followed to ensure that testing is conducted safely.

(f) The railroad shall provide FRA notice at least 30 days in advance of the times and places of any domestic testing and notice at least 90 days in advance for testing not conducted domestically to permit FRA observation of such tests.

§ 299.605 Functional and performance qualification tests.

The railroad shall conduct functional and performance qualification tests, prior to commencing revenue operations, to verify that all safety-critical components meet all functional and all performance specifications.

§ 299.607 Pre-revenue service system integration testing.

(a) Prior to commencing revenue operations, the railroad shall conduct tests of the trainsets throughout the system to—

(1) Verify mechanical positioning of the overhead catenary system; and

(2) Verify performance of the trainset, track, and signal and trainset control systems.

(b) The railroad shall demonstrate safe operation of the system during normal and degraded-mode operating conditions. At a minimum, the following operation tests shall be performed:

(1) Slow-speed operation of a trainset;

(2) Verification of correct overhead catenary and pantograph interaction;

(3) Verification of trainset clearance at structures and passenger platforms;

(4) Incremental increase of trainset speed;

(5) Performance tests on trainsets to verify braking rates in accordance with § 299.409;

(6) Verification of vehicle noise;

(7) Verification of correct vehicle suspension characteristics;

(8) Vehicle/track system qualification as defined in § 299.609;

(9) Load tests with vehicles to verify relay settings and signal and communication system immunization;

(10) Monitoring of utility supply circuits and telephone circuits to ensure the adequacy of power supplies, and to verify that transient-related disturbances are within acceptable limits;

(11) Verification of vehicle detection due to shunting of signal system circuits;

(12) Verification of safe operation of the signal and trainset control system as required by subpart B of this part;

(13) Tests of trainset radio reception during system-wide vehicle operation; and

(14) Verification of electromagnetic interference/electromagnetic compatibility between various subsystems.

§ 299.609 Vehicle/track system qualification.

(a) *General.* All vehicles types intended to operate in revenue service shall be qualified for operation in accordance with this subpart. A qualification program shall be used to demonstrate that the vehicle/track system will not exceed the wheel/rail force safety limits, and the carbody and bogie acceleration criteria specified in paragraph (h) of this section—

(1) At any speed up to and including 10 km/h (6 mph) above the proposed maximum operating speed; and

(2) On track meeting the requirements for the class of track associated with the proposed maximum operating speed as defined in § 299.309. For purposes of qualification testing, speeds may exceed the maximum allowable operating speed for the class of track in accordance with the test plan approved by FRA.

(b) *New vehicle/track system qualification.* Vehicle types not previously qualified under this subpart shall be qualified in accordance with the requirements of this paragraph (b).

(1) *Carbody acceleration.* For vehicle types intended to operate in revenue service at track class H4 speeds or above, qualification testing conducted over a representative segment of the route shall demonstrate that the vehicle type will not exceed the carbody lateral and vertical acceleration safety limits specified in paragraph (h) of this section.

(2) *Bogie lateral acceleration.* For vehicle types intended to operate at track class H4 speeds or above, qualification testing conducted over a representative segment of the route shall demonstrate that the vehicle type will not exceed the bogie lateral acceleration safety limit specified in paragraph (h) of this section.

(3) *Measurement of wheel/rail forces.* For vehicle types intended to operate at track class H4 speeds or above, qualification testing conducted over a representative segment of the route shall demonstrate that the vehicle type will not exceed the wheel/rail force safety limits specified in paragraph (h) of this section.

(c) *Previously qualified vehicle/track system.* Vehicle/track systems previously qualified under this subpart for a track class and cant deficiency on one route may be qualified for operation at the same class and cant deficiency on another route through testing to demonstrate compliance with paragraph (a) of this section in accordance with the following:

(1) *Carbody acceleration.* For vehicle types intended to operate at track class H4 speeds and above, qualification testing conducted over a representative segment of the new route shall demonstrate that the vehicle type will not exceed the carbody lateral and vertical acceleration safety limits specified in paragraph (h) of this section.

(2) *Bogie lateral acceleration.* For vehicle types intended to operate at track class H4 speeds or above, measurement of bogie lateral acceleration during qualification testing shall demonstrate that the vehicle type will not exceed the bogie lateral acceleration safety limit specified in paragraph (h) of this section. Measurement of bogie lateral acceleration, if conducted, shall be performed over a representative segment of the new route.

(d) *Vehicle/track system qualification testing plan.* To obtain the data required to support the qualification program outlined in paragraphs (b) and (c) of this section, the railroad shall submit a qualification testing plan as required by § 299.603(b) at least 60 days prior to testing, requesting approval to conduct the testing at the desired speeds and cant deficiencies. This test plan shall provide for a test program sufficient to evaluate the operating limits of the track and vehicle type and shall include—

(1) Identification of the representative segment of the route for qualification testing;

(2) Consideration of the operating environment during qualification testing, including operating practices and conditions, the signal system, and trainset on adjacent tracks;

(3) The maximum angle found on the gauge face of the designed (newly-profiled) wheel flange referenced with respect to the axis of the wheelset that will be used for the determination of the Single Wheel L/V Ratio safety limit specified in paragraph (h) of this section; and

(4) A target maximum testing speed in accordance with paragraph (a) of this section and the maximum testing cant deficiency.

(e) *Qualification testing.* Upon FRA approval of the vehicle/track system qualification testing plan, qualification testing shall be conducted in two sequential stages as required in this subpart.

(1) Stage-one testing shall include demonstration of acceptable vehicle dynamic response of the subject vehicle as speeds are incrementally increased—

(i) On a segment of tangent track, from acceptable track class H4 speeds to the target maximum test speed; and

(ii) On a segment of curved track, from the speeds corresponding to 76 mm (3 inches) of cant deficiency to the maximum testing cant deficiency.

(2) When stage-one testing has successfully demonstrated a maximum safe operating speed and cant deficiency, stage-two testing shall commence with the subject equipment over a representative segment of the route as identified in paragraph (d)(1) of this section.

(i) A test run shall be conducted over the route segment at the speed the railroad will request FRA to approve for such service.

(ii) An additional test run shall be conducted at 10 km/h (6 mph) above this speed.

(3) When conducting stage-one and stage-two testing, if any of the monitored safety limits are exceeded on any segment of track, testing may continue provided that the track location(s) where any of the limits are exceeded be identified and test speeds be limited at the track location(s) until corrective action is taken. Corrective action may include making adjustments to the track, to the vehicle, or to both of these system components.

(4) Prior to the start of the qualification testing program, a qualifying Track Geometry Measurement System (TGMS) shall be operated over the intended route within 30 calendar days prior to the start of the qualification testing program to verify compliance with the track geometry limits specified in § 299.311.

(f) *Qualification testing results.* The railroad shall submit a report to FRA detailing all the results of the qualification program in accordance with § 299.613. The report shall be submitted at least 60 days prior to the intended operation of the equipment in revenue service over the route.

(g) *Cant deficiency.* Based on the test results and all other required submissions, FRA will approve a maximum trainset speed and value of cant deficiency for revenue service, normally within 45 days of receipt of all the required information. FRA may impose conditions necessary for safely operating at the maximum approved trainset speed and cant deficiency.

(h) *Vehicle/track interaction regulatory limits.* The following vehicle/track interaction regulatory limits shall not be exceeded during qualification testing in accordance with this section.

BILLING CODE 4910–06–P

Table 1 to paragraph (h)			
Vehicle/Track Interaction Safety Limits			
Wheel-Rail Forces[1]			
Parameter	Safety Limit	Filter / Window	Requirements
Single Wheel Vertical Load Ratio	≥ 0.15	1.5 m (5 ft)	No wheel of the vehicle shall be permitted to unload to less than 15 percent of the static vertical wheel load for 1.5 m (5 ft) or more continuous meters. The static vertical wheel load is defined as the load that the wheel would carry when stationary on level track.
Single Wheel L/V Ratio	$\leq \frac{\tan(\delta) - 0.5}{1 + 0.5\tan(\delta)}$	1.5 m (5 ft)	The ratio of the lateral force that any wheel exerts on an individual rail to the vertical force exerted by the same wheel on the rail shall not be greater than the safety limit calculated for the wheel's flange angle (δ) for 1.5 m (5 ft) or more continuous meters.
Net Axle Lateral L/V Ratio	$\leq 0.4 + \frac{22.24}{Va}$	1.5 m (5 ft)	The net axle lateral force, in kN, exerted by any axle on the track shall not exceed a total of 22.24 kN (5 kips) plus 40 percent of the static vertical load that the axle exerts on the track for 1.5 m (5 ft) or more continuous meters. Va = static vertical axle load (kN)
Bogie Side L/V Ratio	≤ 0.6	1.5 m (5 ft)	The ratio of the lateral forces that the wheels on one side of any bogie exert on an individual rail to the vertical forces exerted by the same wheels on that rail shall not be greater than 0.6 for 1.5 m (5 ft) or more continuous meters.

Carbody Accelerations[2]		
Parameter	All Vehicles	Requirements
Carbody Lateral (Transient)	≤ 0.35g peak-to-peak 1 sec window[3] excludes peaks < 50 msec	The peak-to-peak accelerations, measured as the algebraic difference between the two extreme values of measured acceleration in any 1-second time period, excluding any peak lasting less than 50 milliseconds, shall not exceed 0.35g for all vehicles.
Carbody Lateral (Sustained Oscillatory)	≤ 0.10g RMS_t[4] 4 sec window[3] 4 sec sustained	Sustained oscillatory lateral acceleration of the carbody shall not exceed the prescribed (root mean squared) safety limits of 0.10g for all vehicles. Root mean squared values shall be determined over a sliding 4- second window with linear trend removed and shall be sustained for more than 4 seconds.
Carbody Vertical (Transient)	≤ 0.45g peak-to-peak 1 sec window[3] excludes peaks < 50 msec	The peak-to-peak accelerations, measured as the algebraic difference between the two extreme values of measured acceleration in any one second time period, excluding any peak lasting less than 50 milliseconds, shall not exceed 0.45g for all vehicles.
Carbody Vertical (Sustained Oscillatory)	≤ 0.16g RMS_t[4] 4 sec window[3] 4 sec sustained	Sustained oscillatory vertical acceleration of the carbody shall not exceed the prescribed (root mean squared) safety limit of 0.16g for all vehicles. Root mean squared values shall be determined over a sliding 4-second window with linear trend removed and shall be sustained for more than 4 seconds.

Bogie Lateral Acceleration[5]			
Parameter	Safety Limit	Filter / Window	Requirements
Bogie Lateral Acceleration	≤ 0.30g RMS_t[4]	2 sec window[3] 2 sec sustained	Bogie hunting shall not develop below the maximum authorized speed. Bogie hunting is defined as a sustained cyclic oscillation of the bogie evidenced by lateral accelerations exceeding 0.30g root mean squared for more than 2 seconds. Root mean squared values shall be determined over a sliding 2-second window with linear trend removed.

[1] The lateral and vertical wheel forces shall be measured and processed through a low pass filter (LPF) with a minimum cut-off frequency of 25 Hz. The sample rate for wheel force data shall be at least 250 samples per second.
[2] Carbody accelerations in the vertical and lateral directions shall be measured by accelerometers oriented and located in accordance with § 299.337(c)(3).
[3] Acceleration measurements shall be processed through an LPF with a minimum cut-off frequency of 10 Hz. The sample rate for acceleration data shall be at least 100 samples per second.
[4] RMS_t = RMS with linear trend removed.
[5] Bogie lateral acceleration shall be measured by accelerometers mounted on the bogie frame at a longitudinal location as close as practicable to an axle's centerline, or if approved by FRA, at an alternate location.

BILLING CODE 4910–06–C

§ 299.611 Simulated revenue operations.

(a) The railroad shall conduct simulated revenue operations for a minimum period of two weeks prior to revenue operations to verify overall system performance, and provide operating and maintenance experience.

(b) The railroad shall maintain a log of tests conducted during the simulated revenue operations period. This log of tests shall identify any problems encountered during testing, and actions necessary to correct defects in workmanship, materials, equipment, design, or operating parameters.

(c) The railroad shall implement all actions necessary to correct safety defects, as identified by the log prior to the initiation of revenue service.

§ 299.613 Verification of compliance.

(a) The railroad shall prepare a report detailing the results of functional and performance qualification tests, pre-revenue service system integration testing, and vehicle/track system qualification tests required under §§ 299.605, 299.607, and 299.609 respectively. The report shall identify any problems encountered during testing, and alternative actions necessary to correct defects in workmanship, materials, equipment, design, or operating parameters.

(b) The railroad shall implement all actions necessary to correct defects, as identified by the report.

(c) The railroad shall submit the report(s) required by paragraph (a) of this section to FRA prior to commencing simulated revenue operations and at least 60 days prior to the intended start of full revenue service per § 299.609(f).

(d)(1) Prior to implementing a major upgrade to any safety-critical system component or sub-system, or prior to introducing any new safety-critical technology, the railroad shall submit for FRA approval the detailed test procedures and/or analysis in accordance with § 299.603(d).

(2) The railroad shall prepare a report detailing the results of functional and performance qualification tests, pre-revenue service system integration testing, and vehicle/track system qualification tests required under §§ 299.605, 299.607, and 299.609 respectively pertaining to a major upgrade to any safety-critical system component or sub-system, or introduction of any new safety-critical technology. The report shall identify any problems encountered during testing, and alternative actions necessary to correct defects in workmanship, materials, equipment, design, or operating parameters.

Subpart G—Inspection, Testing, and Maintenance Program

§ 299.701 General requirements.

Under the procedures provided in § 299.713, the railroad shall obtain FRA approval of a written inspection, testing, and maintenance program. The program shall provide detailed information, consistent with the requirements set forth in §§ 299.337 through 299.349, and 299.445(a), on the inspection, testing, and maintenance procedures necessary for the railroad to safely operate its system. This information shall include a detailed description of—

(a) Safety inspection procedures, intervals, and criteria;

(b) Test procedures and intervals;

(c) Scheduled preventive maintenance intervals;

(d) Maintenance procedures; and

(e) Special testing equipment or measuring devices required to perform safety inspections and tests.

§ 299.703 Compliance.

After the railroad's inspection, testing, and maintenance program is approved by FRA pursuant to the requirements and procedures set forth in § 299.713, the railroad shall adopt and comply with the program, and shall perform—

(a) All inspections and tests described in the program in accordance with the procedures and criteria that the railroad identified as safety-critical; and

(b) All maintenance tasks and procedures described in the program in accordance with the procedures and intervals that the railroad identified as safety-critical.

§ 299.705 Standard procedures for safely performing inspection, testing, and maintenance, or repairs.

(a) The railroad shall establish written standard procedures for performing all safety-critical or potentially hazardous inspection, testing, maintenance, and repair tasks. These standard procedures shall—

(1) Describe in detail each step required to safely perform the task;

(2) Describe the knowledge necessary to safely perform the task;

(3) Describe any precautions that shall be taken to safely perform the task;

(4) Describe the use of any safety equipment necessary to perform the task;

(5) Be approved by the railroad's official responsible for safety;

(6) Be enforced by the railroad's supervisors responsible for accomplishing the tasks; and

(7) Be reviewed annually by the railroad. The railroad shall provide written notice to FRA in accordance with § 299.9 at least one month prior to the annual review. If the Associate Administrator or their designee indicates a desire to be present, the railroad shall provide a scheduled date and location for the annual review. If the Associate Administrator requests the annual review be performed on another date but the railroad and the Associate Administrator are unable to agree on a date for rescheduling, the annual review may be performed as scheduled.

(b) The inspection, testing, and maintenance program required by this section is not intended to address and should not include procedures to address employee working conditions that arise in the course of conducting the inspections, tests, and maintenance set forth in the program. When reviewing the railroad's program, FRA does not intend to review or approve any portion of the program that relates to employee working conditions.

§ 299.707 Maintenance intervals.

(a) The initial scheduled maintenance intervals shall be based on those in effect on the Tokaido Shinkansen system as required under § 299.13(c)(1).

(b) The maintenance interval of safety-critical components shall be changed only when justified by accumulated, verifiable operating data, and approved by FRA under paragraph § 299.713.

§ 299.709 Quality control program.

The railroad shall establish an inspection, testing, and maintenance quality control program enforced by the railroad or its contractor(s) to reasonably ensure that inspections, testing, and maintenance are performed in accordance with inspection, testing, and maintenance program established under this subpart.

§ 299.711 Inspection, testing, and maintenance program format.

The submission to FRA for each identified subsystem shall consist of two parts—

(a) The complete inspection, testing, and maintenance program, in its entirety, including all required information prescribed in § 299.701, and all information and procedures required for the railroad and its personnel to implement the program.

(b) A condensed version of the program that contains only those items identified as safety-critical, per § 299.703 submitted for approval by FRA under § 299.713.

§ 299.713 Program approval procedure.

(a) *Submission.* Except as provided in § 299.445(a)(2), the railroad shall submit for approval an inspection, testing, and maintenance program as described in § 299.711(b) not less than 180 days prior to pre-revenue service system integration testing. The program shall be submitted to FRA in accordance with § 299.9. If the railroad seeks to amend an approved program as described in § 299.711(b), the railroad shall file with FRA in accordance with § 299.9 for approval of such amendment not less than 60 days prior to the proposed effective date of the amendment. A program responsive to the requirements of this subpart or any amendment to the program shall not be implemented prior to FRA approval.

(b) *Contents.* Each program or amendment shall contain:

(1) The information prescribed in § 299.701 for such program or amendment; and

(2) The name, title, address, and telephone number of the primary person to be contacted with regard to review of the program, its content, or amendments.

(c) *Approval.* (1) Within 90 days of receipt of the initial inspection, testing, and maintenance program, FRA will review the program. The Associate Administrator will notify the primary railroad contact person in writing whether the inspection, testing, and maintenance program is approved and, if not approved, the specific points in which the program is deficient. Deficiencies identified shall be addressed as directed by FRA prior to implementing the program.

(2) FRA will review each proposed amendment to the program that relaxes an FRA-approved requirement within 45 days of receipt. The Associate Administrator will then notify the primary railroad contact person in writing whether the proposed amendment has been approved by FRA and, if not approved, the specific points in which the proposed amendment is deficient. The railroad shall correct any deficiencies as directed by FRA prior to implementing the amendment. For amendments proposing to make an FRA-approved program requirement more stringent, the railroad is permitted to implement the amendment prior to obtaining FRA approval.

(3) Following initial approval of a program or amendment, FRA may reopen consideration of the program or amendment for cause stated.

(4) The railroad may, subject to FRA review and approval under § 299.15, implement inspection, testing, maintenance procedures and criteria, incorporating new or emerging technology.

Appendix A to Part 299—Criteria for Certification of Crashworthy Event Recorder Memory Module

Section 299.439(c) requires that trainsets be equipped with an event recorder that includes a certified crashworthy event recorder memory module. This appendix prescribes the requirements for certifying an event recorder memory module (ERMM) as crashworthy, including the performance criteria and test sequence for establishing the crashworthiness of the ERMM as well as the marking of the event recorder containing the crashworthy ERMM.

A. General Requirements

(a) Each manufacturer that represents its ERMM as crashworthy shall, by marking it as specified in section B of this appendix, certify that the ERMM meets the performance criteria contained in this appendix and that test verification data are available to the railroad or to FRA upon request.

(b) The test verification data shall contain, at a minimum, all pertinent original data logs and documentation that the test sample preparation, test set up, test measuring devices and test procedures were performed by designated, qualified individuals using recognized and acceptable practices. Test verification data shall be retained by the manufacturer or its successor as long as the specific model of ERMM remains in service on any trainset.

(c) A crashworthy ERMM shall be marked by its manufacturer as specified in section B of this appendix.

B. Marking Requirements

(a) The outer surface of the event recorder containing a certified crashworthy ERMM shall be colored international orange. In addition, the outer surface shall be inscribed, on the surface allowing the most visible area, in black letters on an international orange background, using the largest type size that can be accommodated, with the words ''CERTIFIED DOT CRASHWORTHY'', followed by the ERMM model number (or other such designation), and the name of the manufacturer of the event recorder. This information may be displayed as follows:

CERTIFIED DOT CRASHWORTHY

Event Recorder Memory Module Model Number

Manufacturer's Name

Marking ''CERTIFIED DOT CRASHWORTHY'' on an event recorder designed for installation in the railroad's trainsets is the certification that all performance criteria contained in this appendix have been met and all functions performed by, or on behalf of, the manufacturer whose name appears as part of the marking, conform to the requirements specified in this appendix.

(b) Retro-reflective material shall be applied to the edges of each visible external surface of an event recorder containing a certified crashworthy ERMM.

C. Performance Criteria for the ERMM

An ERMM is crashworthy if it has been successfully tested for survival under conditions of fire, impact shock, static crush, fluid immersion, and hydro-static pressure contained in one of the two tables shown in this section of appendix B. (See Tables 1 and 2.) Each ERMM must meet the individual performance criteria in the sequence established in section D of this appendix. A performance criterion is deemed to be met if, after undergoing a test established in this appendix B for that criterion, the ERMM has preserved all of the data stored in it. The data set stored in the ERMM to be tested shall include all the recording elements required by § 299.439(c). The following tables describe alternative performance criteria that may be used when testing an ERMM's

crashworthiness. A manufacturer may utilize either table during its testing but may not combine the criteria contained in the two tables.

TABLE 1 TO APPENDIX A OF PART 299—ACCEPTABLE PERFORMANCE CRITERIA—OPTION A

Parameter	Value	Duration	Remarks
Fire, High Temperature	750 °C (1400 °F)	60 minutes	Heat source: Oven.
Fire, Low Temperature	260 °C (500 °F)	10 hours.	
Impact Shock	55g	100 ms	½ sine crash pulse.
Static Crush	110kN (25,000 lbf)	5 minutes.	
Fluid Immersion	#1 Diesel, #2 Diesel, Water, Salt Water, Lube Oil.	Any *single* fluid, 48 hours.	
	Fire Fighting Fluid	10 minutes, following immersion above.	Immersion followed by 48 hours in a dry location without further disturbance.
Hydrostatic Pressure	Depth equivalent = 15 m. (50 ft.)	48 hours at nominal temperature of 25 °C (77 °F).	

TABLE 2 TO APPENDIX A TO PART 299—ACCEPTABLE PERFORMANCE CRITERIA—OPTION B

Parameter	Value	Duration	Remarks
Fire, High Temperature	1,000 °C (1,832 °F)	60 minutes	Heat source: Open flame.
Fire, Low Temperature	260 °C (500 °F)	10 hours	Heat source: Oven.
Impact Shock—Option 1	23gs	250 ms.	
Impact Shock—Option 2	55gs	100 ms	½ sine crash pulse.
Static Crush	111.2kN (25,000 lbf), 44.5kN (10,000 lbf).	5 minutes. (single "squeeze")	Applied to 25% of surface of largest face.
Fluid Immersion	#1 Diesel, #2 Diesel, Water, Salt Water, Lube Oil, Fire Fighting Fluid.	48 hours *each*.	
Hydrostatic Pressure	46.62 psig (= 30.5 m. or 100 ft.)	48 hours at nominal temperature of 25 °C (77 °F).	

D. Testing Sequence

In order to reasonably duplicate the conditions an event recorder may encounter, the ERMM shall meet the various performance criteria, described in section C of this appendix, in a set sequence. (See Figure 1). If all tests are done in the set sequence (single branch testing), the same ERMM must be utilized throughout. If a manufacturer opts for split branch testing, each branch of the test must be conducted using an ERMM of the same design type as used for the other branch. Both alternatives are deemed equivalent, and the choice of single branch testing or split branch testing may be determined by the party representing that the ERMM meets the standard.

Figure 1 to Appendix A to Part 299 – Event Recorder Memory Module Sequential Testing

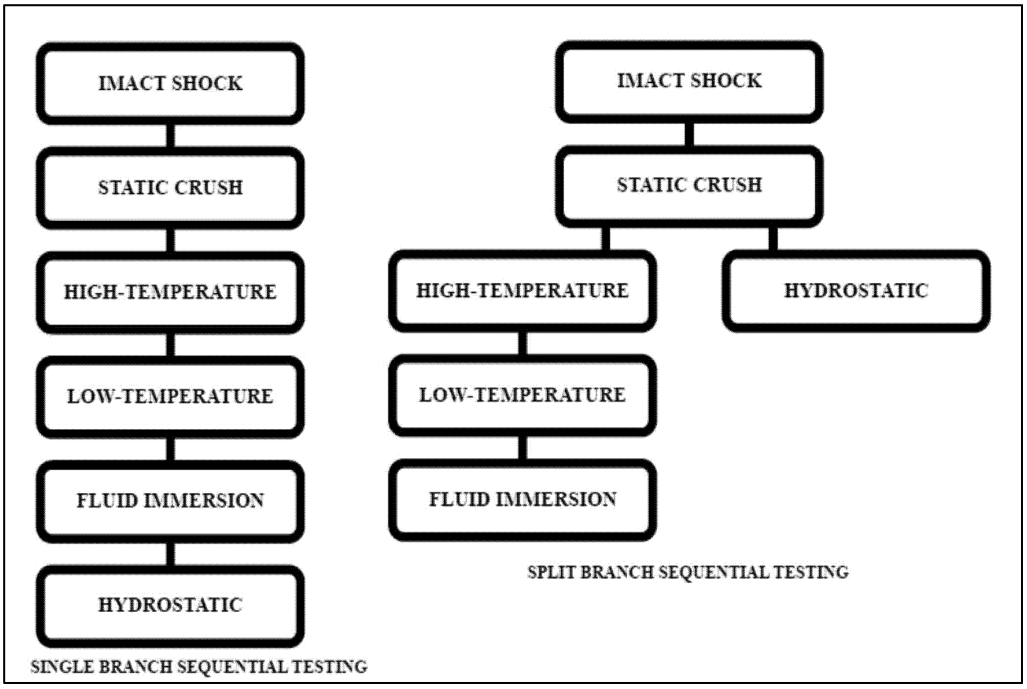

E. Testing Exception

If a new model ERMM represents an evolution or upgrade from an older model ERMM that was previously tested and certified as meeting the performance criteria contained in section C of this appendix, the new model ERMM need only be tested for compliance with those performance criteria contained in section C of this appendix that are potentially affected by the upgrade or modification. FRA will consider a performance criterion not to be potentially affected if a preliminary engineering analysis or other pertinent data establishes that the modification or upgrade will not change the performance of the older model ERMM against the performance criterion in question. The manufacturer shall retain and make available to FRA upon request any analysis or data relied upon to satisfy the requirements of this paragraph to sustain an exception from testing.

Appendix B to Part 299—Cab Noise Test Protocol

This appendix prescribes the procedures for the in-cab noise measurements for high-speed trainsets at speed. The purpose of the cab noise testing is to ensure that the noise levels within the cab of the trainset meet the minimum requirements defined within § 299.431(h).

A. Measurement Instrumentation

The instrumentation used shall conform to the requirements prescribed in appendix H to part 229 of this chapter.

B. Test Site Requirements

The test shall meet the following requirements:

(a) The passenger trainset shall be tested over a representative segment of the railroad and shall not be tested in any site specifically designed to artificially lower in-cab noise levels.

(b) All windows, doors, cabinets, seals, etc., must be installed in the trainset cab and be closed.

(c) The heating, ventilation and air conditioning (HVAC) system or a dedicated heating or air conditioner system must be operating on high, and the vents must be open and unobstructed.

C. Procedures for Measurement

(a) $L_{Aeq,T}$ is defined as the A-weighted, equivalent sound level for a duration of T seconds, and the sound level meter shall be set for A-weighting with slow response.

(b) The sound level meter shall be calibrated with the acoustic calibrator immediately before and after the in-cab tests. The calibration levels shall be recorded.

(c) Any change in the before and after calibration level(s) shall be less than 0.5 dB.

(d) The sound level meter shall be located:

(1) Laterally as close as practicable to the longitudinal centerline of the cab, adjacent to the driver's seat,

(2) Longitudinally at the center of the driver's nominal seating position, and

(3) At a height 1219 mm (48 inches) above the floor.

(e) The sound measurements shall be taken autonomously within the cab.

(f) The sound level shall be recorded at the maximum approved trainset speed (0/ − 3 km/h).

(g) After the passenger trainset speed has become constant at the maximum test speed and the in-cab noise is continuous, $L_{Aeq,T}$ shall be measured, either directly or using a 1 second sampling interval, for a minimum duration of 30 seconds at the measurement position ($L_{Aeq,\ 30s}$).

D. Reporting

To demonstrate compliance, the railroad shall prepare and submit a test report in accordance with § 299.613. As a minimum that report shall contain—

(a) Name(s) of person(s) conducting the test, and the date of the test.

(b) Description of the passenger trainset cab being tested, including: Car number and date of manufacture.

(c) Description of sound level meter and calibrator, including: Make, model, type, serial number, and manufacturer's calibration date.

(d) The recorded measurement during calibration and for the microphone location during operating conditions.

(e) The recorded measurements taken during the conduct of the test.

(f) Other information as appropriate to describe the testing conditions and procedure.

Issued in Washington, DC.

Quintin Kendall,

Deputy Administrator.

[FR Doc. 2020–20388 Filed 11–2–20; 8:45 am]

BILLING CODE 4910–06–P

FEDERAL REGISTER

Vol. 85 Tuesday,

No. 213 November 3, 2020

Part III

Department of the Interior

Fish and Wildlife Service

50 CFR Part 17

Endangered and Threatened Wildlife and Plants; Removing the Gray Wolf (Canis lupus) From the List of Endangered and Threatened Wildlife; Final Rule

DEPARTMENT OF THE INTERIOR

Fish and Wildlife Service

50 CFR Part 17

[Docket No. FWS–HQ–ES–2018–0097; FF09E22000 FXES1113090FEDR 212]

RIN 1018–BD60

Endangered and Threatened Wildlife and Plants; Removing the Gray Wolf (Canis lupus) From the List of Endangered and Threatened Wildlife

AGENCY: Fish and Wildlife Service, Interior.

ACTION: Final rule and notification of petition finding.

SUMMARY: We, the U.S. Fish and Wildlife Service (Service or USFWS), have evaluated the classification status of the gray wolf (*Canis lupus*) entities currently listed in the lower 48 United States and Mexico under the Endangered Species Act of 1973, as amended (Act). Based on our evaluation, we are removing the gray wolf entities in the lower 48 United States and Mexico, except for the Mexican wolf (*C. l. baileyi*), that are currently on the List of Endangered and Threatened Wildlife. We are taking this action because the best available scientific and commercial data available establish that the gray wolf entities in the lower 48 United States do not meet the definitions of a threatened species or an endangered species under the Act. The effect of this rulemaking action is that *C. lupus* is not classified as a threatened or endangered species under the Act. This rule does not have any effect on the separate listing of the Mexican wolf subspecies (*Canis lupus baileyi*) as endangered under the Act. In addition, we announce a 90-day finding on a petition to maintain protections for the gray wolf in the lower 48 United States as endangered or threatened distinct population segments. Based on our review, we find that the petition does not present substantial scientific or commercial information indicating that the petitioned actions may be warranted. Therefore, we are not initiating status reviews of the petitioned entities in response to the petition.

DATES: This rule is effective January 4, 2021.

ADDRESSES: This final rule, the post-delisting monitoring plan, and the summary of the basis for the petition finding contained in this document are available on the internet at *http://www.regulations.gov* under Docket No. FWS–HQ–ES–2018–0097 or *https://ecos.fws.gov.* Comments and materials we received, as well as some supporting documentation we used in preparing this rule, are available for public inspection at *http://www.regulations.gov.*

FOR FURTHER INFORMATION CONTACT: Bridget Fahey, Chief, Division of Classification and Conservation, Ecological Services, U.S. Fish and Wildlife Service, Headquarters Office, MS: ES, 5275, Leesburg Pike, Falls Church, VA 22041–3803; telephone (703) 358–2163. Persons who use a telecommunications device for the deaf (TDD) may call the Federal Relay Service at 800–877–8339.

SUPPLEMENTARY INFORMATION:

Executive Summary

Why we need to publish a rule. Under the Act and our regulations, if we determine that a species is no longer threatened or endangered throughout all or a significant portion of its range, we must remove the species from the Lists of Endangered and Threatened Wildlife and Plants in title 50 of the Code of Federal Regulations (50 CFR 17.11 and 17.12). The Act requires us to issue a rule to remove a species from the List (''delist'' it) (16 U.S.C. 1533(c)).

What this document does. This rule removes from the List gray wolves that are currently listed as threatened or endangered species in the lower 48 United States and Mexico. This rule does not have any effect on the separate listing of the Mexican wolf subspecies as endangered under the Act (80 FR 2487, January 16, 2015).

The basis for our action. Under the Act, we determine whether a species is an endangered or threatened species based on any one or more of five factors or the cumulative effects thereof: (A) The present or threatened destruction, modification, or curtailment of its habitat or range; (B) Overutilization for commercial, recreational, scientific, or educational purposes; (C) Disease or predation; (D) The inadequacy of existing regulatory mechanisms; or (E) Other natural or manmade factors affecting its continued existence (16 U.S.C. 1533(a)(1(A)). We have determined that the gray wolf entities currently listed in the lower 48 United States and Mexico (not including the Mexican wolf subspecies) do not meet the definition of an endangered species or threatened species under the Act.

Peer review and public comment. We sought comments on the proposed delisting rule from independent specialists to ensure that this rule is based on reasonable assumptions and scientifically sound data and analyses. We also considered all comments and information we received during the proposed delisting rule's comment period.

Table of Contents

Previous Federal Actions
General Background
  The 1978 Reclassification
  National Wolf Strategy
The Currently Listed *C. lupus* Entities Do Not Meet the Statutory Definition of a ''Species''
Approach for This Rule
  The Gray Wolf Entities Addressed in This Rule
  Why and How We Address Each Configuration of Gray Wolf Entities
  The Two Listed Entities Assessed Separately
  The Two Listed Entities Assessed in Combination
  The Two Listed Entities and the NRM DPS Assessed in Combination
  How We Address the C. l. baileyi Listing
  How We Address Taxonomic Uncertainties in This Rule
  Definition and Treatment of Range
  Summary of Our Approach
Species Information
  Biology and Ecology
  Taxonomy of Gray Wolves in North America
  Range and Population Trends Prior to 1978 Reclassification
  Historical Range
  Historical Abundance
  Historical Trends in Range and Abundance
  Distribution and Abundance at the Time of the 1978 Reclassification
  Current Distribution and Abundance
Gray Wolf Recovery Plans and Recovery Implementation
  Recovery Criteria for the Eastern United States
  Recovery Progress in the Eastern United States
  Recovery Criteria for the NRM
  Recovery Progress in the NRM DPS
Historical Context of Our Analysis
Regulatory Framework
Summary of Factors Affecting the Species
  Human-Caused Mortality
  Human-Caused Mortality in the Currently Listed Entities
  Human-Caused Mortality in the NRM DPS
  Regulated Harvest in Idaho
  Depredation Control in Idaho
  Wolf Population and Human-Caused Mortality in Idaho Summary
  Regulated Harvest in Montana
  Depredation Control in Montana
  Wolf Population and Human-Caused Mortality in Montana Summary
  Regulated Harvest in Wyoming
  Depredation Control in Wyoming
  Wolf Population and Human-Caused Mortality in Wyoming Summary
  Regulated Harvest in Oregon
  Depredation Control in Oregon
  Wolf Population and Human-Caused Mortality in Oregon Summary
  Regulated Harvest in Washington
  Depredation Control in Washington
  Wolf Population and Human-Caused Mortality in Washington Summary

Effects on Wolf Social Structure and Pack Dynamics
The Role of Public Attitudes
Human-Caused Mortality Summary
Habitat and Prey Availability
Great Lakes Area: Suitable Habitat
Great Lakes Area: Prey Availability
NRM DPS: Suitable Habitat
NRM DPS: Prey Availability
West Coast States: Suitable Habitat
West Coast States: Prey Availability
Central Rocky Mountains: Suitable Habitat
Central Rocky Mountains: Prey Availability
Habitat and Prey Availability Summary
Disease and Parasites
Genetic Diversity and Inbreeding
Effects of Climate Change
Cumulative Effects
Ongoing and Post-Delisting State, Tribal, and Federal Wolf Management
Ongoing Management in the Delisted NRM DPS
State Management
Idaho
Montana
Wyoming
Tribal Management and Conservation of Wolves
Wind River Indian Reservation
Blackfeet Indian Reservation
Flathead Indian Reservation
Confederated Tribes of the Colville Reservation
Management on Federal Lands
Summary of Management in the NRM DPS
Post-Delisting Management Where Wolves are Currently Listed
State Management in Minnesota, Wisconsin, and Michigan
The Minnesota Wolf Management Plan
Depredation Control in Minnesota
Post-Delisting Depredation Control in Minnesota
Post-Delisting Regulated Harvest in Minnesota
The Wisconsin Wolf Management Plan
Depredation Control in Wisconsin
Post-Delisting Depredation Control in Wisconsin
Post-Delisting Regulated Harvest in Wisconsin
The Michigan Wolf Management Plan
Depredation Control in Michigan
Post-Delisting Depredation Control in Michigan
Post-Delisting Regulated Harvest in Michigan
State Management in the West Coast States
The Oregon Wolf Management Plan
The Washington Wolf Management Plan
The California Wolf Management Plan
State Management in the Central Rocky Mountains
Post-Delisting Management in Colorado
Post-Delisting Management in Utah
Tribal Management and Conservation of Wolves
Management on Federal Lands
Great Lakes Area
West Coast States
Central Rocky Mountains
Summary of Post-Delisting Management
Summary of Changes From the Proposed Rule
Summary of Comments and Recommendations
Peer Reviewer Comments
Biology, Ecology, Range, Distribution, or Population Trends
Human-Caused Mortality
Habitat and Prey Availability
Disease and Parasites
Post-Delisting Management
General
Biological Report
Policy
State and Federal Agency Comments
Recovery and Delisting
Biology, Ecology, Range, Distribution, or Population Trends
Taxonomy
Human-Caused Mortality
Effects of Climate Change
Genetics
Post-Delisting Management
Policy
Tribal and Tribal Organization Comments
Public Comments
Recovery and Delisting
Biology, Ecology, Range, Distribution, or Population Trends
Taxonomy
Human-Caused Mortality
Habitat and Prey Availability
Disease and Parasites
Effects of Climate Change
Genetics
Additional Threats
Post-Delisting Management
Post-Delisting Monitoring
General
Policy
Evaluation of a Petition To Revise the Listings for the Gray Wolf Under the Act
Background
Species and Range
Petition History
Findings
Alternatives 1 and 2
Alternative 3
Determination of Species Status
Currently Listed Entities
Minnesota: Determination of Status Throughout All of Its Range
Minnesota: Determination of Status Throughout a Significant Portion of Its Range
Minnesota: Final Determination
44-State Entity: Determination of Status Throughout All of Its Range
44-State Entity: Determination of Status Throughout a Significant Portion of Its Range
44-State Entity: Final Determination
Combined Listed Entity
Combined Listed Entity: Determination of Status Throughout All of Its Range
Combined Listed Entity: Determination of Status Throughout a Significant Portion of Its Range
Combined Listed Entity: Final Determination
Lower 48 United States Entity
Lower 48 United States Entity: Determination of Status Throughout All of Its Range
Lower 48 United States Entity: Determination of Status Throughout a Significant Portion of Its Range
Lower 48 United States Entity: Final Determination
Determination of Species Status: Conclusion
Effects of This Rule
Post-Delisting Monitoring
Required Determinations
National Environmental Policy Act
Government-to-Government Relationship With Tribes

Previous Federal Actions

Gray wolves were originally listed as subspecies or as regional populations [1] of subspecies in the lower 48 United States and Mexico. Early listings were under legislative predecessors of the Act—the Endangered Species Preservation Act of 1966 and the Endangered Species Conservation Act of 1969. Later listings were under the Endangered Species Act of 1973. The **Federal Register** citations for all the rulemaking actions described in the following paragraphs are provided in table 1, below.

In 1978, we published a rule reclassifying the gray wolf throughout the lower 48 United States and Mexico, subsuming the earlier listings of subspecies or regional populations of subspecies. In that rule, we classified gray wolves in Minnesota as a threatened species and gray wolves elsewhere in the lower 48 United States and Mexico as an endangered species (table 1). At that time, we considered the gray wolves in Minnesota to be a listable entity under the Act, and we considered the gray wolves in the lower 48 United States and Mexico, other than Minnesota, to be another listable entity (43 FR 9607 and 9610, respectively, March 9, 1978). The earlier subspecies listings thus were subsumed into two listed entities: The gray wolf in Minnesota; and the gray wolf in the rest of the lower 48 United States and Mexico.

The 1978 reclassification was undertaken to address changes in our understanding of gray wolf taxonomy and protect all gray wolves in the lower 48 United States and Mexico (43 FR 9607, March 9, 1978). In addition, we also clarified that the gray wolf was only listed south of the Canadian border.

The 1978 reclassification rule stipulated that ''biological subspecies would continue to be maintained and dealt with as separate entities'' (43 FR 9609), and offered ''the firmest assurance that [the Service] will continue to recognize valid biological subspecies for purposes of its research and conservation programs'' (43 FR 9610). Accordingly, we implemented three gray wolf recovery programs in three regions of the country—the

[1] A group of fish or wildlife in the same taxon below the subspecific level, in common spatial arrangement that interbreed when mature (50 CFR 17.3).

northern Rocky Mountains, the Southwestern United States, and the Eastern United States (including the Great Lakes States). The recovery programs were pursued to establish and prioritize recovery criteria and actions appropriate to the unique local circumstances of the gray wolf (table 1). Recovery in one of these regions (Southwestern United States) included reintroduction of gray wolves in an experimental population (table 1). Recovery in a second region (northern Rocky Mountains) included reintroduction of gray wolves in an experimental population (table 1) and natural recolonization. Recovery in the third region (Eastern United States) relied on natural recolonization and population growth.

Between 2003 and 2015, we published several rules revising the 1978 listed entities to acknowledge new information regarding taxonomy, comport with current policy and practices, and recognize the biological recovery of gray wolves in the northern Rocky Mountains (NRM) and Eastern United States. Previous rules were challenged and subsequently invalidated or vacated by various courts based, in part, on their determinations that our distinct population segment (DPS) designations were legally flawed (table 1).

Of particular relevance to this rule is our 2011 final rule addressing wolf recovery in the western Great Lakes (WGL) area of the Eastern United States (76 FR 81666, Dec. 28, 2011). In that rule, we recognized the expansion of the Minnesota wolf population by revising the previously listed Minnesota entity to include all or portions of six surrounding States, classified the expanded population as the WGL DPS, and determined that the WGL DPS did not meet the definition of a threatened or an endangered species due to recovery. Also in 2011, we published a final rule that implemented section 1713 of Public Law 112–10, reinstating our 2009 delisting rule for the NRM DPS and, with the exception of Wyoming, removed gray wolves in that DPS from the List. In 2012, we finalized a rule removing gray wolves in Wyoming from the List. That rule was later vacated by the U.S. District Court for the District of Columbia. In 2013, we published a proposed rule to: (1) Delist *C. lupus* in the remaining listed portions of the United States and Mexico outside of the delisted NRM and WGL DPSs; and (2) keep Mexican wolf (*C. l baileyi;* occurring in the Southwestern United States and Mexico) listed as an endangered subspecies (table 1).

In 2014, the U. S. District Court for the District of Columbia vacated the December 28, 2011, final rule identifying the WGL DPS and removing it from the List (table 1). The district court's decision was based, in part, on its conclusion that the Act does not allow the Service to use its authority to identify a DPS solely for the purpose of delisting it (*Humane Soc'y of the U.S.* v. *Jewell,* 76 F. Supp. 3d 69, 112–13 (D.D.C. 2014)). The U.S. Court of Appeals disagreed, ruling in 2017 that the Service had the authority to designate a DPS from a larger listed entity and delist it in the same rule (table 1). That court nonetheless upheld the district court's vacatur of the rule, concluding that the Service failed to analyze or consider two significant aspects of the rule: The impacts of delisting the DPS on the rest of the listed entity and the impacts of the loss of historical range (*Humane Soc'y of the U.S.* v. *Zinke,* 865 F.3d 585, 602–03, 605–07).

In 2015, we finalized the portion of the 2013 proposed rule listing the Mexican wolf as an endangered subspecies (table 1). In 2017, the D.C. Circuit reversed the district court's decision and reinstated the delisting of gray wolves in Wyoming (*Defenders of Wildlife* v. *Zinke,* 849 F.3d 1077 (DC Cir. 2017)). Thus, wolves are currently delisted in the entire northern Rocky Mountains DPS (figure 1).

As a result of the above actions, the *C. lupus* listed entities in 50 CFR 17.11 currently include: (1) *C. lupus* in Minnesota listed as threatened, and (2) *C. lupus* in all or portions of 44 U.S. States and Mexico, listed as endangered (figure 1). In the United States, this includes: All of Alabama, Arkansas, California, Colorado, Connecticut, Delaware, Florida, Georgia, Illinois, Indiana, Iowa, Kansas, Kentucky, Louisiana, Massachusetts, Maryland, Maine, Michigan, Missouri, Mississippi, North Carolina, North Dakota, Nebraska, New Hampshire, New Jersey, Nevada, New York, Ohio, Oklahoma, Pennsylvania, Rhode Island, South Carolina, South Dakota, Tennessee, Texas, Virginia, Vermont, West Virginia, and Wisconsin; and portions of Arizona, New Mexico, Oregon, Utah, and Washington (figure 1).

On March 15, 2019, we published a proposed rule to delist the two currently listed *C. lupus* entities in the **Federal Register** (84 FR 9648). The publication of the proposed delisting rule opened a 60-day public comment period, which was scheduled to close on May 14, 2019. Based on several requests from the public to extend the comment period, we published a document on May 14, 2019, extending the comment period 60 days, to July 15, 2019 (84 FR 21312). We announced a public information open house and public hearing on our proposed rule and the availability of the final peer review report in the **Federal Register** on June 6, 2019 (84 FR 26393). The public events were held in Brainerd, Minnesota, on June 25, 2019.

For additional information on these Federal actions and their associated litigation history, refer to the relevant associated rules or the Previous Federal Actions sections of our recent gray wolf actions (see table 1).

TABLE 1—KEY FEDERAL REGULATORY ACTIONS UNDER THE ACT AND PREDECESSOR LEGISLATION [1] PERTAINING TO GRAY WOLF AND, WHERE APPLICABLE, OUTCOMES OF COURT CHALLENGES TO THESE ACTIONS.

Entity	Year of action	Type of action	**Federal Register** citation	Litigation history
C. lupus lycaon	1967 [1]	List	32 FR 4001, March 11, 1967.	
C. lupus irremotus	1973 [1]	List	38 FR 14678, June 4, 1973.	
C. l. lycaon	1974	List	39 FR 1171, January 4, 1974.	
C. l. irremotus	1974	List	39 FR 1171, January 4, 1974.	
C. l. baileyi	1976	List (E)	41 FR 17736, April 28, 1976.	
C. lupus monstrabilis [2]	1976	List (E)	41 FR 24064, June 14, 1976.	
C. lupus in lower 48 U.S. (except Minnesota) & Mexico.	1978	Reclassify (E)	43 FR 9607, March 9, 1978 [3].	

TABLE 1—KEY FEDERAL REGULATORY ACTIONS UNDER THE ACT AND PREDECESSOR LEGISLATION [1] PERTAINING TO GRAY WOLF AND, WHERE APPLICABLE, OUTCOMES OF COURT CHALLENGES TO THESE ACTIONS.—Continued

Entity	Year of action	Type of action	Federal Register citation	Litigation history
C. lupus in Minnesota	1978	Reclassify (T)	43 FR 9607, March 9, 1978 [3].	
C. lupus	1978 (revised 1992)	Recovery Plan for Eastern Timber Wolf (eastern gray wolf).	n.a.	
C. lupus	1980 (revised 1987)	Recovery Plan for NRM Gray Wolf	n.a.	
C. lupus	1982 (revised 2017)	Recovery Plan for Mexican Gray Wolf (*C. l. baileyi*).	n.a.	
C. lupus	1994	Establish experimental population (southeastern Idaho, southern Montana, and Wyoming).	59 FR 60266, November 22, 1994.	
C. lupus	1994	Establish experimental population (central Idaho & southwest Montana).	59 FR 60252, November 22, 1994.	Upholding reintroduction in the NRM region (*Wyoming Farm Bureau* v. *Babbitt,* 199 F.3d 1224 (10th Cir. 2000)).
C. lupus	1998	Establish experimental population (Arizona & New Mexico).	63 FR 1752, January 12, 1998.	
C. lupus DPSs: —Eastern DPS —Western DPS —Southwestern U.S. & Mexico DPS	2003	Designate DPS & classify/reclassify as:. —Eastern DPS (T) —Western DPS (T) —Southwestern U.S. & Mexico DPS (E) —Delist in unoccupied non-historical range	68 FR 15804, April 1, 2003.	Rule vacated (*Defenders of Wildlife* v. *Norton,* 354 F. Supp. 2d 1156 (D. Or. 2005); *National Wildlife Federation* v. *Norton,* 386 F. Supp. 2d 553 (D. Vt. 2005)).
C. lupus WGL DPS	2007	Designate DPS & delist	72 FR 6052, February 8, 2007.	Rule vacated (*Humane Society of the United States* v. *Kempthorne,* 579 F. Supp. 2d 7 (D. D.C. 2008)).
C. lupus NRM DPS	2008	Designate DPS & delist	73 FR 10514, February 27, 2008.	Rule enjoined (*Defenders of Wildlife* v. *Hall,* 565 F. Supp. 2d 1160 (D. Mont. 2008)), and subsequently vacated and remanded.
C. lupus DPSs: —WGL DPS —NRM DPS	2008	Reinstatement of protections—NRM & WGL DPSs.	73 FR 75356, December 11, 2008.	
C. lupus WGL DPS	2009	Designate DPS & delist	74 FR 15070, April 2, 2009.	Rule vacated (*Humane Society of the United States* v. *Salazar,* 1:09–CV–1092–PLF (D.D.C. 2009)).
C. lupus NRM DPS (except Wyoming)	2009	Designate DPS & delist (except in Wyoming).	74 FR 15123, April 2, 2009.	Rule vacated (*Defenders of Wildlife* v. *Salazar,* 729 F. Supp. 2d 1207 (D. Mont. 2010)).
C. lupus WGL DPS	2009	Reinstatement of protections—WGL	74 FR 47483, September 16, 2009.	
C. lupus NRM DPS	2010	Reinstatement of protections—NRM DPS.	75 FR 65574, October 26, 2010.	
C. lupus NRM DPS	2011	Reissuance of 2009 NRM DPS delisting rule (as required by Public Law 112–10—The Department of Defense and Full-Year Continuing Appropriations Act, 2011).	76 FR 25590, May 5, 2011.	Upholding Section 1713 (*Alliance for the Wild Rockies* v. *Salazar,* 672 F.3d 1170 (9th Cir. 2012)).
C. lupus WGL DPS	2011	Revise 1978 listing, designate DPS & delist.	76 FR 81666, December 28, 2011.	Rule vacated (*Humane Society of the U.S.* v. *Jewell,* 76 F. Supp. 3d 69, 110 (D.D.C. 2014)) . Vacatur upheld on appeal (*Humane Society of the U.S.* v. *Zinke,* 865 F.3d 585 (D.C. Cir. 2017)).
C. lupus in lower 48 U.S. and Mexico, as revised.	2012	5-Year Review	n.a.	
C. lupus in Wyoming	2012	Delist in Wyoming	77 FR 55530, September 10, 2012.	Rule vacated (*Defenders of Wildlife* v. *Jewell,* 68 F. Supp. 3d 193 (D.D.C. 2014) Vacatur reversed on appeal (*Defenders of Wildlife* v. *Zinke,* 849 F.3d 1077 (D.C. Cir. 2017)).
C. lupus in lower 48 U.S. (except NRM & WGL DPSs) and Mexico.	2013	Propose delist in lower 48 U.S. & list *C. l. baileyi* (E); status review of wolves in Pacific Northwest.	78 FR 35664, June 13, 2013.	
C. l. baileyi	2015	List E	80 FR 2488, January 16, 2015.	
C. l. baileyi	2015	Revised 1998 *C. lupus* experimental population and associated it with *C. l. baileyi* listing.	80 FR 2512, January 16, 2015.	
C. lupus WGL DPS and *C. lupus* in Wyoming.	2015	Reinstatement of protections—WGL DPS & Wyoming.	80 FR 9218, February 20, 2015.	
C. lupus in Wyoming	2017	Reinstatement of 2012 delisting—Wyoming.	82 FR 20284, May 1, 2017.	

E = endangered species, T = threatened species, DPS = Distinct Population Segment, NRM = Northern Rocky Mountains, WGL = Western Great Lakes.

[1] Action taken under the Endangered Species Preservation predecessor legislation (Endangered Species Act of 1966, Endangered Species Conservation Act of 1969).

[2] Later subsumed into *C. l. baileyi* due to taxonomic changes.

[3] In this rule we also identified critical habitat in Michigan and Minnesota and promulgated special regulations under section 4(d) of the Act for operating a wolf-management program in Minnesota. The special regulation was later modified (50 FR 50793, December 12, 1985).

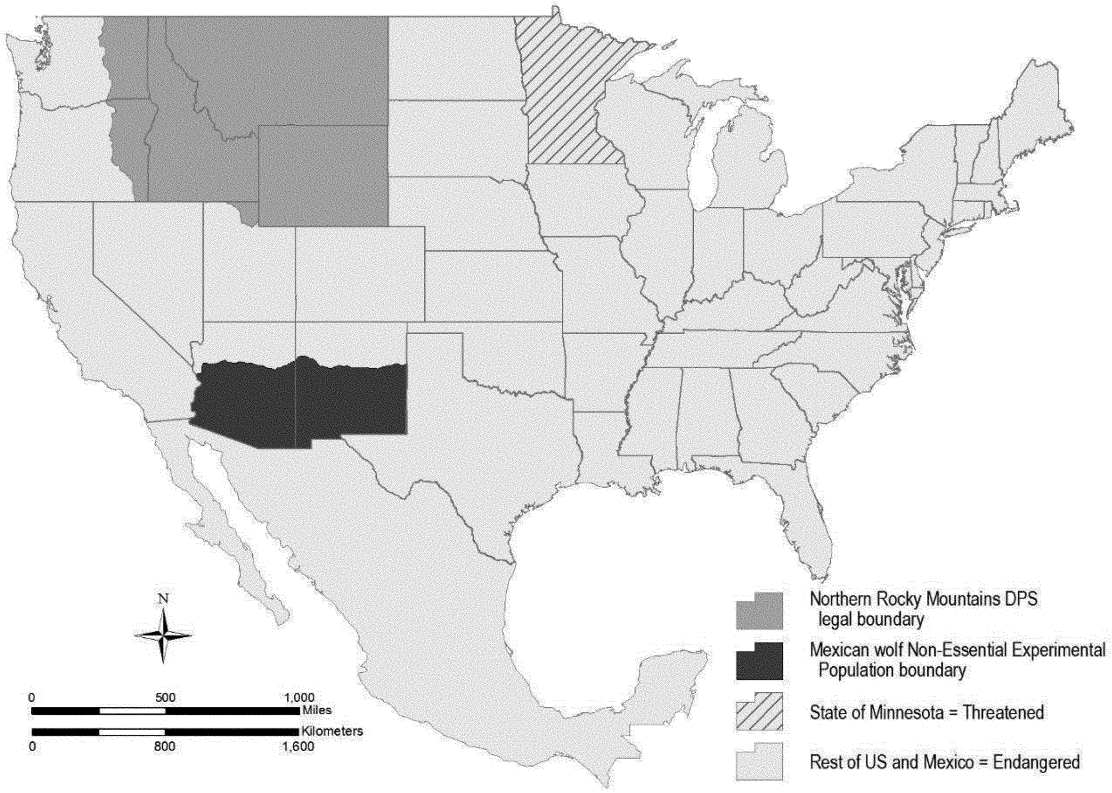

Figure 1: Current legal status of *C. lupus* under the Act. Northern Rocky Mountains DPS and Mexican Wolf Non-Essential Experimental Population are not part of the currently listed entities. All map lines are approximations; see 50 CFR 17.11 and 17.84(k) for exact boundaries.

General Background

The 1978 Reclassification

When the gray wolf (*C. lupus*) was reclassified in March 1978 (replacing multiple subspecies entities with two *C. lupus* population entities as described further in Previous Federal Actions), it had been extirpated from much of its historical range in the lower 48 United States. Although the 1978 reclassification listed two gray wolf entities (a threatened population in Minnesota and an endangered population throughout the rest of the lower 48 United States and Mexico), these entities were not predicated upon a formal DPS analysis, because the reclassification predated the November 1978 amendments to the Act, which revised the definition of ''species'' to include DPSs of vertebrate fish or wildlife, and our 1996 DPS Policy.

As indicated in Previous Federal Actions, the 1978 reclassification was undertaken to address changes in our understanding of gray wolf taxonomy and to ensure the gray wolf was protected wherever it was found (as described in 47 FR 9607, March 9, 1978) in the lower 48 United States and Mexico, rather than an indication of where gray wolves actually existed or where recovery efforts were considered necessary. Thus, the 1978 reclassification resulted in inclusion of large areas of the lower 48 United States where gray wolves were extirpated, as well as the mid-Atlantic and southeastern United States, areas where long-held differences of opinion regarding the precise boundary of the species' historical range remain (Young and Goldman 1944, pp. 413–416, 478; Hall 1981, p. 932; Nowak 1995, p. 395, Fig. 20; Nowak 2009, p. 242; Mech and Boitani 2003, p. 251, Fig. 9.7). While this generalized approach to the gray wolf listing facilitated recovery of wolves in the northern Rocky Mountains and western Great Lakes, it also erroneously included areas outside the species' historical range and was misread by some members of the public as an expression of a more expansive gray wolf recovery effort not required by the Act and never intended by the Service. In fact, our longstanding approach to recovery has focused on reestablishing wolf populations in three specific regions of the country: The Eastern United States (including the Great Lakes States), the northern Rocky Mountains, and the Southwestern United States. We have consistently focused our recovery efforts on reestablishing wolf populations in these specific regions (see table 1 and Gray Wolf Recovery Plans and Recovery Implementation).

National Wolf Strategy

Although not required by the Act, in 2011 we described our national wolf strategy in our proposed rule to revise the List for the gray wolf in the Eastern United States (76 FR 26089–26090, May 5, 2011). This strategy was intended to: (1) Lay out a cohesive and coherent approach to addressing wolf conservation needs, including protection and management, in accordance with the Act's statutory framework; (2) ensure that actions taken for one wolf population do not cause unintended consequences for other populations; and (3) be explicit about the role of historical range in the conservation of extant wolf populations.

Our strategy focused on the continued conservation of three extant gray wolf entities (the Great Lakes population, the northern Rocky Mountains population, and the southwestern population of Mexican wolves) and consideration of conservation of a fourth, wolves in the Pacific Northwest. In 2013 we completed a status review for gray wolves in the Pacific Northwest (western Washington, western Oregon, and northern California) (table 1) and determined that, under our DPS policy, these wolves are not discrete from wolves in the recovered NRM DPS (Idaho, Montana, Wyoming, eastern Oregon, eastern Washington, and north-central Utah) (see 78 FR 35707–35713). Therefore, since that time, our strategy has been consistent with a focus on the western Great Lakes, the northern Rocky Mountains, and the southwestern population of Mexican wolves (see Previous Federal Actions).

The Currently Listed *C. lupus* Entities Do Not Meet the Statutory Definition of a ''Species''

The gray wolf entities that are currently on the List do not meet the Act's definition of a ''species'' (16 U.S.C. 1532(16)). The original listing of certain gray wolf subspecies predated the Act. In 1967, under a precursor to the Act, we listed *C. l. lycaon* (Eastern timber wolf) in the Great Lakes region (table 1). In 1973, under the same precursor to the Act, we listed *C. l. irremotus* (Northern Rocky Mountain wolf) (table 1). In 1974, these subspecies were listed under the Act (table 1). In 2015, we subsequently listed *C. l. baileyi* (Mexican wolf) as endangered in the Southwestern United States and Mexico (table 1). Finally, on June 14, 1976, we listed a fourth gray wolf subspecies, *C. l. monstrabilis* (table 1), which was later subsumed within *C. l. baileyi.*

In 1978, we concluded that ''this listing arrangement has not been satisfactory because the taxonomy of wolves is out of date, wolves may wander outside of recognized subspecific boundaries, and some wolves from unlisted subspecies may occur in certain parts of the lower 48 states'' (43 FR 9607, March 9, 1978). We wanted to clarify that *C. lupus* was listed as threatened or endangered south of the Canadian border, and we determined that the ''most convenient'' way to do so was to list the entity at the species level rather than by subspecies (43 FR 9607, March 9, 1978). The separate subspecies listings were subsumed into two entities that were defined geographically: (1) Threatened in Minnesota; and (2) endangered throughout the rest of the lower 48 United States and Mexico (43 FR 9612, March 9, 1978). The 1978 rule treated these entities as distinct ''species'' under the statutory definition of the term that was in effect at that time (43 FR 9610, March 9, 1978).

When the Act was adopted in 1973, the term ''species'' was defined to include species, subspecies or ''any other group of fish or wildlife of the same species or smaller taxa in common spatial arrangement that interbreed when mature'' (Pub. L. 93–205, 87 Stat. 884, 886 (1973)). In November 1978, the Act was amended to introduce the concept of DPSs (16 U.S.C. 1532(16)). Unlike species and subspecies, DPS is not a taxonomic term. Rather, it refers to certain populations of vertebrates (*i.e.,* less than the entire range of a taxonomic vertebrate species or subspecies). We issued a policy in 1996, in conjunction with the National Marine Fisheries Service, to explain how we would apply this statutory term (61 FR 4722–4725, February 7, 1996).

Since the concept of DPSs was introduced, we have attempted to revise the lower 48 United States and Mexico listings to account for the biological recovery of gray wolves in the Western Great Lakes (WGL) and Northern Rocky Mountains (NRM). We published rules identifying recovered DPSs, but some of those actions did not survive legal challenges. For example, our 2007 and 2011 rules designating and delisting a WGL DPS were vacated by the reviewing courts. Thus, wolves in the WGL are part of the currently listed gray wolf entities. By contrast, although our rules designating and delisting the NRM DPS were also challenged in court, after several rounds of litigation and congressional action the NRM DPS was delisted and remains so today (see Previous Federal Actions).

The two currently listed entities are: (1) *C. lupus* in Minnesota (listed as threatened); and (2) *C. lupus* in all or portions of 44 U.S. States and Mexico (listed as endangered). Neither of the entities encompasses an entire species, or a subspecies, of gray wolf. Thus, the currently listed entities would only constitute listable entities (*i.e.,* meet the statutory definition of ''species'') if they qualified as DPSs.

To constitute a DPS, a vertebrate population must be both discrete from and significant to the remainder of the taxon (*i.e.,* taxonomic species or subspecies) (61 FR 4725, February 7, 1996). We consider first whether the population is discrete and, if so, then we evaluate its biological and ecological significance (61 FR 4725, February 7, 1996). A population segment may be considered discrete if it ''is markedly separated from other populations of the same taxon as a consequence of physical, physiological, ecological, or behavioral factors'' (61 FR 4725). For the reasons set forth below, the gray wolf entities currently on the List do not meet this standard.

The two entities are not markedly separated from other populations of the same taxon. The threatened Minnesota listed entity is not discrete from the endangered listed entity where they abut in the Great Lakes area because gray wolves in Minnesota are not discrete from gray wolves in Wisconsin and Michigan. In 1978, gray wolves were largely confined to northern Minnesota, with some wolves occupying Isle Royale and possibly other individuals scattered in Wisconsin and Michigan (43 FR 9608). Wolves in northern Minnesota subsequently dispersed and recolonized Wisconsin and Michigan, resulting in a metapopulation [2] in the Great Lakes area (Mech 2010, p. 130). There are no significant physical barriers separating Minnesota wolves from those in Wisconsin and Michigan, as evidenced by frequent movement of wolves among the three States (Treves *et al.* 2009, entire). In addition, genetic analyses demonstrate that Wisconsin and Michigan wolves are mostly of the same genetic makeup as Minnesota wolves and there is effective interbreeding among wolves in the three States (Wheeldon *et al.* 2010, p. 4438; Wheeldon and White 2009, p. 104; Fain *et al.* 2010, p. 1758; see also *Taxonomy of Gray Wolves in North America*). Thus, gray wolves in the Minnesota entity are not ''markedly separated'' from wolves in the Great Lakes portion of the endangered listed entity.

Likewise, the endangered listed entity is not discrete from other populations of gray wolves. As noted above, gray wolves in the Great Lakes portion of the endangered listed entity are connected to gray wolves in Minnesota. And gray wolves in the West Coast States that are part of the endangered listed entity are not discrete from the recovered NRM population (78 FR 35664, June 13, 2013,

[2] A metapopulation is a population that exists as partially isolated sets of subpopulations that ''interact'' when individuals move from one subpopulation to another. A metapopulation is widely recognized as being more secure over the long term than are several isolated populations that contain the same total number of individuals. A metapopulation is more secure because adverse effects experienced by one of its subpopulations resulting from genetic drift, demographic shifts, and local environmental fluctuations can be countered by occasional influxes of individuals and their genetic diversity from the other components of the metapopulation.

pp. 35707–35713; see also *Current Distribution and Abundance*). We removed most of the NRM DPS from the List, most recently, in 2011 (ID, MT, the eastern one-third of OR and WA, and a small portion of north-central UT) and the remainder, most recently, in 2017 (WY) (table 1). As we explained in our 2019 proposed rule, the NRM population has continued to expand and wolves from that population have now dispersed and become established in parts of the West Coast States (84 FR 9656, March 15, 2019). Genetic analysis shows that all gray wolves currently occupying Oregon descended from NRM wolves and those wolves expanded into California (Hendricks *et al.* 2018, pp. 142–143; California Department of Fish and Wildlife 2020, entire). Wolves in Washington in both the endangered listed entity and the NRM include individuals descended from NRM wolves as well as wolves from Canada (Hendricks et al. 2018, pp. 142–143). Thus, listed wolves in the West Coast States are not genetically distinct from the NRM wolves. Nor is there marked separation resulting from physical factors. Wolf habitat models show that there is little separation between occupied wolf habitat in the NRM DPS and suitable habitat in western Washington, western Oregon, and northern California (see 78 FR 35712, June 13, 2013). Any gaps in suitable habitat are unlikely to preclude dispersal because gray wolves are capable of traveling long distances through a variety of habitats (78 FR 35712, June 13, 2013; ODFW 2016, p. 10; Jimenez et al. 2017, entire). In sum, listed wolves in the West Coast States are not discrete from wolves in the delisted NRM DPS portion of the gray wolf taxon.

Because the two currently listed entities are not discrete, we need not evaluate their significance (61 FR 4725, February 7, 1996). Neither of the listed entities is a DPS, and thus neither entity is a ''species'' as that term is defined under the Act.

As we noted in our proposed rule, the currently listed gray wolf entities could be removed from the List because they do not meet the statutory definition of a ''species'' (84 FR 9686, March 15, 2019). This independent basis for delisting, which is based on the plain language of the Act, was explained in our 2019 revisions to the Act's implementing regulations. We distinguish between a ''listed entity'' and a ''species,'' and reiterate that an entity that is not a ''species'' as defined under the Act should be removed from the List. See 50 CFR 424.11(e)(3) (providing that the Secretary shall remove an entity from the List if, among other things, ''[t]he listed entity does not meet the statutory definition of a species''). In the preamble to the rule we explained that this is not a new interpretation, but ''merely reflects the text and intent of the Act, *i.e.,* only 'species,' as defined in section 3 of the Act, may be listed under the Act'' (84 FR 45037, August 27, 2020).

However, before proceeding with delisting, we may consider whether any populations of gray wolves covered by the listed entities meet the definition of a threatened species or an endangered species. Thus, instead of removing the listed entities solely because they do not meet the statutory definition of a ''species,'' in this rule, we consider the status of gray wolves in several configurations, as explained below, to eliminate the possibility of removing protections for any gray wolves that might meet the Act's definition of a ''species'' and might be endangered or threatened.

Approach for This Rule

The Gray Wolf Entities Addressed in This Rule

As described above, two gray wolf entities are currently listed: *C. lupus* in Minnesota, listed as threatened; and *C. lupus* in all or portions of 44 U.S. States and Mexico, listed as endangered (figure 1). We refer to these entities simply as ''Minnesota'' and the ''44-State entity'' throughout this rule.

While our past status reviews have focused on gray wolf DPSs and taxonomic units that align with our national wolf strategy (see table 1), we have revised our approach in this rule to take into account the unique listing history of the gray wolf, as well as multiple court opinions regarding our prior actions to designate and delist gray wolf DPSs (see table 1). The two currently listed gray wolf entities are largely vestiges of a 42-year-old action (the 1978 reclassification (see General Background)) that occurred prior to formulation and implementation of our DPS policy. As explained above, the gray wolf entities that are currently on the List are not species, subspecies, or distinct population segments (DPSs) (see The Currently Listed *C. lupus* Entities Do Not Meet the Statutory Definition of a ''Species''), and as such should be delisted. However, in recognition of the unique listing history of the gray wolf, our many prior actions to designate and delist DPSs (table 1), and related court opinions, we have adopted a conservative approach to delisting in this rule. Rather than focus on gray wolf DPSs and taxonomic units, we focus on the currently listed entities. We do so by evaluating the conservation status of the currently listed entities under three different configurations, as explained below.

In our proposed rule, we focused on the status of listed gray wolves by assessing the two listed entities in combination. In response to peer review and public comments, we have expanded our analysis to consider the conservation status of gray wolves in three different configurations. Specifically, we assess: (1) Each of the two currently listed gray wolf entities separately; (2) the two currently listed entities combined into a single entity (the approach in our proposed rule); and (3) a single gray wolf entity that includes all gray wolves in the lower 48 state and Mexico except for the Mexican wolf. We explain our reasoning for analyzing these specific configurations below.

Why and How We Address Each Configuration of Gray Wolf Entities

We consider the status of gray wolves in each of the following configurations to determine whether wolves should be included on the List in their current status, be reclassified from their current status (*e.g.,* upgraded to endangered or downgraded to threatened), or be removed from the List. For a summary of these configurations, see table 2.

The Two Listed Entities Assessed Separately

In this configuration, we assess the status of gray wolves occurring within the geographic area outlined by each of the two currently listed *C. lupus* entities separately, as they are listed. We do so because they are the entities that are currently on the List. Evaluating the entities as they are listed is consistent with section 4(c) of the Act, which authorizes the Secretary to review species included on the List and determine on the basis of the review whether changes to the listing status are warranted (16 U.S.C. 1533(c)(2)). We do not consider the delisted NRM DPS wolves as part of the 44-State entity under analysis in this configuration because they are recovered and no longer listed. However, we include information on the NRM DPS, as appropriate, to provide context and to inform our analysis and conclusions about the status of wolves comprising the 44-State entity.

The Two Listed Entities Assessed in Combination

In this configuration, we assess the status of gray wolves occurring within the geographic area outlined by the two

currently listed *C. lupus* entities combined into a single entity. We do so because: (1) These are the entities that are currently on the List and it is clear that neither listed entity would qualify as a DPS under our 1996 DPS policy due to their lack of discreteness from each other (see The Currently Listed *C. lupus* Entities Do Not Meet the Statutory Definition of a ''Species''), and (2) it makes sense, biologically, to combine them for analysis in light of their lack of discreteness. We do not consider the delisted NRM DPS wolves as part of the listed entity under analysis in this configuration because they are recovered and no longer listed. However, we include information on the NRM DPS, as appropriate, to provide context and to inform our analysis and conclusions about the status of wolves comprising this combined entity.

We assessed the two listed entities in combination in our proposed rule. In that rule, we referred to the resulting entity as the ''gray wolf entity.'' For clarity, in this final rule, we refer to the resulting entity as the ''combined listed entity'' (table 2).

The Two Listed Entities and the NRM DPS Assessed in Combination

In this configuration, we assess the status of gray wolves occurring within the geographic area of the lower 48 United States and Mexico (excluding the Mexican gray wolf; see *How We Address the C. l. baileyi Listing* below), a single entity that includes the two currently listed entities and the delisted NRM DPS combined. We do so because: (1) It includes the two entities that are currently on the List and neither listed entity qualifies as a DPS under our 1996 DPS policy because the two listed entities are not discrete from each other and the 44-State entity is not discrete from the NRM DPS (see The Currently Listed *C. lupus* Entities Do Not Meet the Statutory Definition of a ''Species''), and (2) it makes sense, biologically, to combine the two currently listed entities and the NRM DPS for analysis in light of their lack of discreteness. We refer to this entity as the ''lower 48 United States entity.'' Although we include the NRM wolves in this configuration due to their connection to currently listed wolves, we reiterate that wolves in the NRM DPS are recovered, and we are not reexamining or revisiting our 2009 and 2012 delisting rules (74 FR 15123, April 2, 2009; 77 FR 55530, September 10, 2012). For additional information regarding our rationale for analyzing the lower 48 United States entity, see Summary of Changes from the Proposed Rule.

TABLE 2—SUMMARY OF ANALYSES IN THIS RULE

Configuration	Description of entity assessed	Name given to the entity in this rule	Why we assess the entity
1. The separate listed entities.	State of Minnesota	Minnesota	It is a currently listed entity.
	Lower 48 States and Mexico [1] outside of the NRM DPS and Minnesota.	44-State entity	It is a currently listed entity.
2. The combined listed entities.	Lower 48 States and Mexico [1] outside of the NRM DPS.	combined listed entity	Includes the two currently listed entities, but these two entities are not discrete from one another; it makes sense, biologically, to combine them in light of their lack of discreteness. We do not include the NRM wolves because they are delisted.
3. The combined listed entities and the NRM DPS.	Lower 48 States and Mexico [1].	lower 48 United States entity.	Includes the two currently listed entities, but these two entities are not discrete from one another, and one (the 44-State entity) is not discrete from the delisted NRM DPS; it makes sense, biologically, to combine them in light of their lack of discreteness.

[1] But *see How We Address the C. l. baileyi Listing.*

How We Address the C. l. baileyi Listing

As indicated above (see Previous Federal Actions), in 2015 we revised the listing for the gray wolf by reclassifying the subspecies *C. l. baileyi* as a separately listed entity with the status of endangered, wherever found. Although the rulemaking does not include language expressly excluding *C. l. baileyi* from the previously listed *C. lupus* entity, we indicated in our 2015 final rule listing the subspecies that the effect of the regulation was to revise the List by making a separate entry for the Mexican wolf (80 FR 2511, January 16, 2015). Therefore, because we already assessed the status of, and listed, the Mexican wolf separately, we do not assess individuals or populations of the Mexican wolf in this rule. In other words, we do not consider individuals or populations of Mexican wolves to be among the wolves under analysis in this rule. Further, the Mexican wolf is the only subspecies of *C. lupus* known to currently occupy the Mexican wolf experimental population area (that covers portions of Arizona and New Mexico) and Mexico. Therefore, based on the best available information, the experimental population area and Mexico are unoccupied by and, consequently, outside the range of, the gray wolves under analysis in this rule (see *Definition and Treatment of Range*).

How We Address Taxonomic Uncertainties in This Rule

The taxonomy and evolutionary history of wolves in North America are complex and controversial, particularly with respect to the taxonomic assignment of wolves historically present in the Northeastern United States and those that occur in portions of the Great Lakes region (eastern wolves; see *Taxonomy of Gray Wolves in North America*). Available information indicates ongoing scientific debate and a lack of resolution on the taxonomy of eastern wolves. (see *Taxonomy of Gray Wolves in North America*). Further, none of these viewpoints is more supported by the scientific evidence or more widely accepted by the scientific community than others. In other words, there is no standard taxonomy indicating that eastern wolves are a distinct species, and no agreement among the scientific community regarding the taxonomic assignment of eastern wolves.

We originally listed the gray wolf subspecies *C. l. lycaon,* the eastern timber wolf, in 1967. We continued to recognize this subspecies—and the Northeastern United States as part of its historical range—for years, as evidenced by both our original (1978) and revised

(1992) Recovery Plan for the Eastern Timber Wolf. In 2013, we proposed recognizing the species *C. lycaon,* occurring in southeastern Canada and, historically, the Northeastern United States, in our proposed rule to delist *C. lupus* and list *C. l. baileyi* as endangered (table 1). However, all peer reviewers of that proposed rule considered the scientific basis for recognizing *C. lycaon* as a species to be insufficient. They noted that this is an area of active scientific research with new studies published yearly, and stated that the proposed recognition of these wolves as a species was premature (National Center for Ecological Analysis and Synthesis 2014, unpaginated). New information published on the topic since publication of our 2013 rule indicates the taxonomy and evolutionary history of eastern wolves remains unresolved (USFWS 2020, pp. 1–5). The uncertainty of the existence of a separate species is reflected in the fact that *C. lycaon* is not recognized by authoritative taxonomic organizations such as the American Society of Mammalogists or the International Commission on Zoological Nomenclature. Therefore, based on our review of the best available scientific and commercial information, in this rule we continue to recognize wolves in the Northeastern United States as members of the species *C. lupus.*

Because we recognize wolves in the Northeastern United States as members of the species *C. lupus* in our assessment of the status of gray wolf entities in this rule, we include eastern wolves and eastern wolf range that occurs within the geographical boundaries of the gray wolf entities we assess. This approach ensures our analysis takes into account the possibility that gray wolves historically occurred throughout most of the lower 48 United States. In other words, because we also consider eastern wolf historical range, our analysis assumes a larger historical range for the gray wolf species in the lower 48 United States and, as a result, a greater loss of such range (see Historical Range).

Scientists also disagree on the taxonomic assignment of wolves in the southeastern United States generally recognized as ''red wolves.'' However, a recent consensus study by the National Academies of Sciences, Engineering, and Medicine concluded that available evidence supports species (*C. rufus*) status for the extant red wolf (National Academies of Sciences, Engineering, and Medicine (NASEM) 2019, pp. 51–72). We recognize the red wolf as the species *C. rufus* (USFWS 2018, pp. 15–17) and note that it is listed as endangered where found (32 FR 4001, March 11, 1967). We do not consider red wolves further in this rule and the red wolf listing is not affected by this rule.

Definition and Treatment of Range

We interpret the term ''range'' as used in the Act's definitions of ''threatened species'' and ''endangered species'' to refer to the area occupied by the species at the time we make a status determination under section 4 of the Act (79 FR 37583, July 1, 2014). In this rule, we consider the latest wolf distribution maps (inclusive of wolf packs, breeding pairs, and areas of persistent activity by multiple wolves) and other information obtained from State agencies as the best available information on wolf occupancy and, therefore, wolf range. Gray wolf range based on this information is shown in figure 2. Because we do not consider Mexican wolves to be among the wolves under analysis in this rule, we do not include the Mexican wolf experimental population area (that covers portions of Arizona and New Mexico) or Mexico within current gray wolf range (*See How We Address the C. l. baileyi Listing*).

Wolves occur periodically in the lower 48 United States as lone dispersers in places that otherwise lack evidence of persistent wolf presence or suitable habitat for supporting a resident wolf population (see *Current Distribution and Abundance*). While dispersal plays an important role in recolonization of suitable habitat, individual dispersers that do not settle in an area, survive, and reproduce do not substantively contribute to the wolf's viability (*i.e.,* the ability of a species to sustain populations in the wild over time). Therefore, we did not include the areas in which only these lone dispersers are occasionally found in our definition of current range.

Summary of Our Approach

In this rule, we assess the status of gray wolves in three different configurations. We do not include in our assessment individuals or populations of the Mexican wolf (*C. l. baileyi*) (wolves that occur in Mexico and the nonessential experimental population area in the Southwestern United States). Also, for the purposes of this rule, we consider any eastern wolves within the geographic boundaries of the entities we evaluated to be members of the species *C. lupus.* Further, we consider the range of the gray wolf to be the current distribution of gray wolves (as shown in figure 2) within the geographic boundaries of the entities we evaluated.

Species Information

We provide detailed background information on gray wolves in the lower 48 United States in a separate Gray Wolf Biological Report (see USFWS 2020, entire). This document can be found along with this rule at *http://regulations.gov* in Docket No. FWS–HQ–ES–2018–0097 (see *Supplemental Documents*). We summarize relevant information from this report below. For additional information, including sources of the information presented below, see USFWS (2020, entire) and references therein.

Biology and Ecology

Gray wolves are the largest wild members of the canid (dog) family and have a broad circumpolar range. Adults range in weight from 18 to 80 kilograms (40 to 175 pounds), depending on sex and geographic locale. Gray wolves are highly territorial, social animals that live and hunt in packs. They are well adapted to traveling fast and far in search of food, and to catching and eating large mammals. In North America, they are primarily predators of medium to large mammals, including deer, elk, and other species, and are efficient at shifting their diet to take advantage of available food resources (USFWS 2020, p. 6).

Gray wolves are a highly adaptable species. They can successfully occupy a wide range of habitats provided adequate prey exists and human-caused mortality is sufficiently regulated. Scientific models generally depict high-quality suitable habitat as areas with sufficient prey where human-caused mortality is relatively low due to limited human access, or high amounts of escape cover, or relatively low risk of wolf–livestock conflicts (USFWS 2020, pp. 8–9).

Established gray wolf populations are remarkably resilient as long as their food supply is adequate and human-caused mortality is not too high. Where human-caused mortality is low or nonexistent, gray wolf populations are regulated by the distribution and abundance of prey on the landscape, though considerable evidence indicates density-dependent, intrinsic mechanisms (*e.g.,* social strife, territoriality, disease) may limit populations when ungulate densities are high. High levels of reproduction and immigration in gray wolf populations can compensate for high mortality rates in established populations (USFWS 2020, pp. 7–8). Pack social structure is very adaptable—in many instances, breeding members can be quickly replaced from within or outside the

pack, and pups can be reared by other pack members should their parents die. Consequently, wolf populations can rapidly overcome severe disruptions, such as pervasive human-caused mortality or disease; and they can increase rapidly after severe declines if the source of mortality is reduced. The species' dispersal capabilities allow wolf populations to quickly expand and recolonize vacant habitats as long as rates of human-caused mortality are not excessive; although, the rate of recolonization can be affected by the extent of intervening unoccupied habitat between the source population and newly recolonized area (USFWS 2020, p. 7).

Taxonomy of Gray Wolves in North America

The gray wolf is a member of the canid family (*Canidae*) in a genus (*Canis*) that includes domestic dogs (*C. familiaris*), coyotes (*C. latrans*), and several other species (USFWS 2020, p. 1). Taxonomic relationships among *Canis* species found in North America have been studied extensively, though with a notable lack of consensus on various phylogenetic issues (USFWS 2020, p. 1). Consequently, wolf taxonomy and evolutionary history in North America are complex and controversial (USFWS 2020, p. 5).

In North America, scientists generally recognize a ''red wolf'' phenotype (morphological form), and an ''eastern wolf'' phenotype that is distinct from wolves further west (''western gray wolves''), but disagree on the correct taxonomic assignment of these two entities or on their evolutionary origin (USFWS 2020, p. 1). As indicated above (see *How We Address Taxonomic Uncertainties in this Rule*), we continue to recognize the red wolf as the species *C. rufus* and do not discuss the taxonomy of the species further in this rule (for more information, see our 2018 Red Wolf Species Status Assessment). We discuss the eastern wolf further, below.

The eastern wolf has been the source of perhaps the most significant disagreement on North American canid taxonomy among scientists. The eastern wolf has been variously described as a species, a subspecies of gray wolf, an ecotype of gray wolf, the product of introgressive hybridization between gray wolves and coyotes, the same species as the red wolf, or the product of introgressive hybridization between red wolves and gray wolves (USFWS 2020, p. 1). Morphologically, eastern wolves have long been considered distinct from gray wolves and coyotes. Many scientists have generally found the eastern wolf to be consistently intermediate between the gray wolf and the coyote, both morphologically and genetically (USFWS 2020, p. 2).

Regardless of viewpoint on the correct taxonomic status of the eastern wolf, hybridization and introgression is widely recognized to have played, and continue to play, an important role among eastern wolves. However, there is scientific disagreement on the role of hybridization between eastern wolves and coyotes, eastern wolves and gray wolves, and gray wolves and coyotes. Minnesota appears to be the western edge of a hybrid zone between gray wolves in the west and eastern wolves—wolves in western Minnesota appear to be western gray wolves based on morphological and genetic analysis while wolves in eastern Minnesota and much of the Great Lakes area appear to be eastern wolf, introgressed with western gray wolf to varying degrees. Scientists who support the eastern wolf as a distinct species report that the only area in which eastern wolves are not currently experiencing admixture with either gray wolves or coyotes is in Algonquin Provincial Park in Ontario, Canada (USFWS 2020, pp. 2–3). Even among those who hypothesize a hybrid origin of eastern wolves, meaning they are the result of ancient or more recent hybridization between gray wolves and coyotes, eastern wolves are viewed as genetically distinct (USFWS 2020, pp. 2–3).

Despite the ongoing debate about taxonomy and evolutionary history, there is general agreement that wolves currently found in the Great Lakes area and neighboring provinces in Canada are genetically distinct to some degree from wolves further west in the Rocky Mountains or the Pacific northwest (USFWS 2020, pp. 1–2). Although there is some debate about the degree of genetic difference between the wolves that occupy the Great Lakes area versus the Western United States, wolves in the Great Lakes area are generally smaller, occupy habitat dominated by mixed deciduous-coniferous forests with relatively little elevation change, and their primary prey is white-tailed deer; whereas wolves in the Western United States are larger and occupy montane forests that also contain larger prey such as elk and moose (USFWS 2020, pp. 28–29).

All wolves in the Western United States are widely recognized as gray wolves (*C. lupus*) (USFWS 2020, pp. 3–4). However, the science pertaining to gray wolf subspecies designations, unique evolutionary lineages, ecotypes, and admixture of formerly isolated populations continues to develop (USFWS 2020, pp. 3–5)—except for the Mexican wolf, where there is strong scientific evidence supporting its subspecies status. For example, coastal and inland wolves in western Canada and Alaska have been identified as genetically and morphologically distinct, and display distinct habitat and prey preferences, despite relatively close proximity. There have been attempts to assess whether any wolves recolonizing western States possess genetic markers indicative of coastal wolf ancestry. Genetic analysis of wolves recolonizing Washington revealed the presence of individuals primarily from the northern Rocky Mountains. However, two individuals were an admixture of wolves with inland wolf ancestry (wolves from the northern Rocky Mountains or inland western Canada) and coastal wolf ancestry (wolves from coastal British Columbia and coastal Alaska), although it is not clear whether the admixture of coastal and inland wolves happened in Washington, or whether already admixed individuals dispersed there. All wolves recolonizing Oregon and California appear to be descended from inland wolves dispersing from the northern Rocky Mountains (USFWS 2020, pp. 3–5).

Range and Population Trends Prior to 1978 Reclassification

Historical Range

We view the historical range to be the range of gray wolves within the lower 48 United States at the time of European settlement. We determined that this timeframe is appropriate because it precedes the major changes in range in response to excessive human-caused mortality (USFWS 2020, pp. 9–13).

At the time of the 1978 reclassification, the historical range of the gray wolf was generally believed to include most of North America and, consequently, most of the lower 48 United States. We acknowledge that the historical range of the gray wolf is uncertain and the topic of continued debate among scientists. However, based on our review of the best available information, we view the historical range of the gray wolf within the lower 48 United States to be consistent with that presented in Nowak (1995, p. 395, fig. 20) and depicted in figure 2. This includes all areas within the lower 48 United States except western California, a small portion of southwestern Arizona, and the southeastern United States (see figure 2 and USFWS 2020, pp. 9–13). While some authorities question the absence of gray wolves in parts of California, limited preserved

physical evidence of wolves in California exists (USFWS 2020, p. 11). Therefore, we rely on early reports of wolves in the State that describe the species as occurring in the northern and Sierra Nevada Mountain regions of California. Further, while recognizing that the extent of overlap of red wolf and gray wolf ranges is uncertain (USFWS 2020, pp. 9–10), we chose Nowak (1995) as the historical range boundary in the East to encompass the largest reasonable historical distribution in the northeast and, consequently, the lower 48 United States. Also, although included in the 44-state listing, because the southeastern United States are generally recognized as within the range of the red wolf (USFWS 2020, pp. 9–10), we consider it to be generally outside the range of the gray wolf.

Historical Abundance

Historical abundance of gray wolves within the lower 48 United States is largely unknown. Based on the reports of European settlers, gray wolves were common in much of the West. While historical (at the time of European settlement) estimates are notoriously difficult to verify, one study estimates that hundreds of thousands of wolves occurred in the Western United States and Mexico (USFWS 2020, pp. 10–11). In the East, in the Great Lakes area, there may have been 4,000 to 8,000 wolves in Minnesota, 3,000 to 5,000 in Wisconsin, and fewer than 6,000 in Michigan (USFWS 2020, p. 12). No estimates are available for historical wolf abundance in the Northeast (USFWS 2020, p. 13).

Historical Trends in Range and Abundance

Gray wolf range and numbers throughout the lower 48 United States declined significantly during the 19th and 20th centuries as a result of humans killing wolves through poisoning, unregulated trapping and shooting, and government-funded wolf-extermination efforts (USFWS 2020, pp. 9–14). By the time subspecies were first listed under the Act in 1974 (table 1), the gray wolf had been eliminated from most of its historical range within the lower 48 United States. Aside from a few scattered individuals, wolves occurred in only two places within the lower 48 United States. A population persisted in northeastern Minnesota, and a small, isolated group of about 40 wolves occurred on Isle Royale, Michigan. The Minnesota wolf population was the only major U.S. population in existence outside Alaska at this time and numbered about 1,000 individuals (USFWS 2020, pp. 12–14).

Distribution and Abundance at the Time of the 1978 Reclassification

By 1978, when several gray wolf subspecies were consolidated into two listed entities, a lower 48 United States and Mexico entity and a separate Minnesota entity, the gray wolf population in Minnesota had increased to an estimated 1,235 wolves in 138 packs (in the winter of 1978–79) and had an estimated range of 14,038 square miles (mi^2) (36,500 square kilometers (km^2)) (USFWS 2020, p. 20) (figure 2). Although, prior to this time, wolves were occasionally reported in Wisconsin, it was not until 1978 that wolf reproduction was documented in the State (USFWS 2020, p. 21). In the West, occasional sightings were documented, but there was no indication that reproducing wolf packs occurred in the West at the time (USFWS 2020, p. 14; 59 FR 60266, November 22, 1994; USFWS 1987, pp. 3–6).

Current Distribution and Abundance

During the years since the species was reclassified in 1978, gray wolves within the lower 48 United States increased in number (figure 3) and expanded in distribution (figure 2). Gray wolves within the lower 48 United States now exist primarily in two large, stable or growing metapopulations in two geographic areas in the lower 48 United States—the Western United States and the Great Lakes area in the Eastern United States (USFWS 2020, p. 27). Gray wolf populations within each of these areas are connected as evidenced by movements between States and genetic data (USFWS 2020, p. 27). The Great Lakes metapopulation consists of more than 4,200 individuals broadly distributed across the northern portions of three States in the Great Lakes area (USFWS 2020, p. 27). This metapopulation is also connected, via documented dispersals, to the large and expansive population of about 12,000–14,000 wolves in eastern Canada. As a result, gray wolves in the Great Lakes area do not function as an isolated metapopulation of 4,200 individuals in three States, but rather as part of a much larger ''Great Lakes and eastern Canada'' metapopulation that spans across those three States and two Canadian Provinces (USFWS 2020, pp. 27–28).

Gray wolves in the Western United States are distributed across the NRM DPS and into western Oregon, western Washington, northern California, and most recently in northwest Colorado (USFWS 2020, p. 28). The Western United States metapopulation consisted of more than 1,900 gray wolves in 2015 (at least 1,880 in the NRM DPS and at least 26 outside the NRM DPS boundary), the final year of a combined northern Rocky Mountain wolf annual report (USFWS 2020, p. 28, Appendix 2). At the end of 2015, the post-delisting monitoring period ended for Idaho and Montana. After the post-delisting monitoring period ended for Idaho and Montana, these States transitioned away from using minimum counts to document wolf numbers and developed other techniques to estimate population size or evaluate population trends (or both) which are not directly comparable to minimum counts (USFWS 2020, pp. 15–16). Based on the most current estimates, approximately 1,000 gray wolves occur in Idaho and 819 wolves were estimated in Montana (USFWS 2020, Appendix 2). In addition, the most recent year-end minimum counts indicate at least 311 gray wolves occur in Wyoming and 310 in the States of Oregon, Washington, and California (256 in the delisted NRM DPS and 54 in the endangered listed entity) (USFWS 2020, p. 16, Appendix 2). While the current estimates for Idaho and Montana are not directly comparable to year-end minimum counts, indications from mortality data are that the number of individuals in these States remains similar to the number of individuals that were in these States in 2015, when all of the States were reporting year-end minimum counts (see table 3). In addition, in January of 2020, Colorado Parks and Wildlife personnel confirmed the presence of a group of at least six wolves in extreme northwest Colorado (USFWS 2020, pp. 19, 28).

Similar to the metapopulation in the Great Lakes area, the gray wolf metapopulation in the Western United States is connected to a large and expansive population of about 15,000 wolves in western Canada (USFWS 2020, p. 28). As a result, gray wolves in the Western United States function as part of a larger ''western United States and western Canada'' metapopulation that spans several States of the United States and two Provinces of Canada. Further, effective dispersal has been documented between West Coast States where gray wolves are federally protected (California, western Oregon, and western Washington), as well as between these areas, the NRM DPS where wolves are delisted (Idaho, Montana, Wyoming, eastern Oregon, eastern Washington, and north-central Utah), and Canada (USFWS 2020, pp. 5, 17–18, 28). Thus, wolves outside the NRM DPS boundary in western Washington, western Oregon, and northern California are an extension of

the metapopulation of wolves in the northern Rocky Mountains and western Canada. Although their specific place of origin remains unknown at this time, the group of wolves in Colorado are assumed to be related to NRM wolves based on proximity and the fact that dispersing wolves of known origin documented in Colorado since the early 2000s all originated from the NRM, including the lone individual that dispersed from Wyoming to Colorado and has resided in North Park, Colorado, since at least July 2019 (USFWS 2020, p. 19). Little information is currently available regarding the movements or territory use of the group in northwest Colorado but, to date, all confirmed reports have been in Colorado.

Finally, a number of lone long-distance dispersing wolves have been documented outside core populations [3] of the Great Lakes area and Western United States. For example, over the years, dispersing wolves have been detected in all States within historical gray wolf range west of the Mississippi River except Oklahoma and Texas (USFWS 2020, pp. 26, 28–29). Since the early 2000s, confirmed records of individual gray wolves have been reported from Vermont, Massachusetts, New York, Indiana, Illinois, Iowa, Missouri, North Dakota, South Dakota, Nebraska, Kansas, Colorado, Utah, Arizona, and Nevada. The total number of confirmed records in each of these States, since the early 2000s, ranges from 1 to at least 27, the latter occurring in North Dakota, which also has an additional 45 probable but unverified reports (USFWS 2020, pp. 25–26).

In sum, gray wolves in the lower 48 United States today exist primarily as two large metapopulations: One spread across northern Minnesota, Michigan, and Wisconsin, and the other consisting of the recovered and delisted NRM DPS wolf population that is biologically connected to a small number of colonizing wolves in western Washington, western Oregon, northern California, and, most likely, Colorado (USFWS 2020, pp. 27–29) (figure 2). In addition, a number of lone dispersers have been documented outside of core populations in several States.

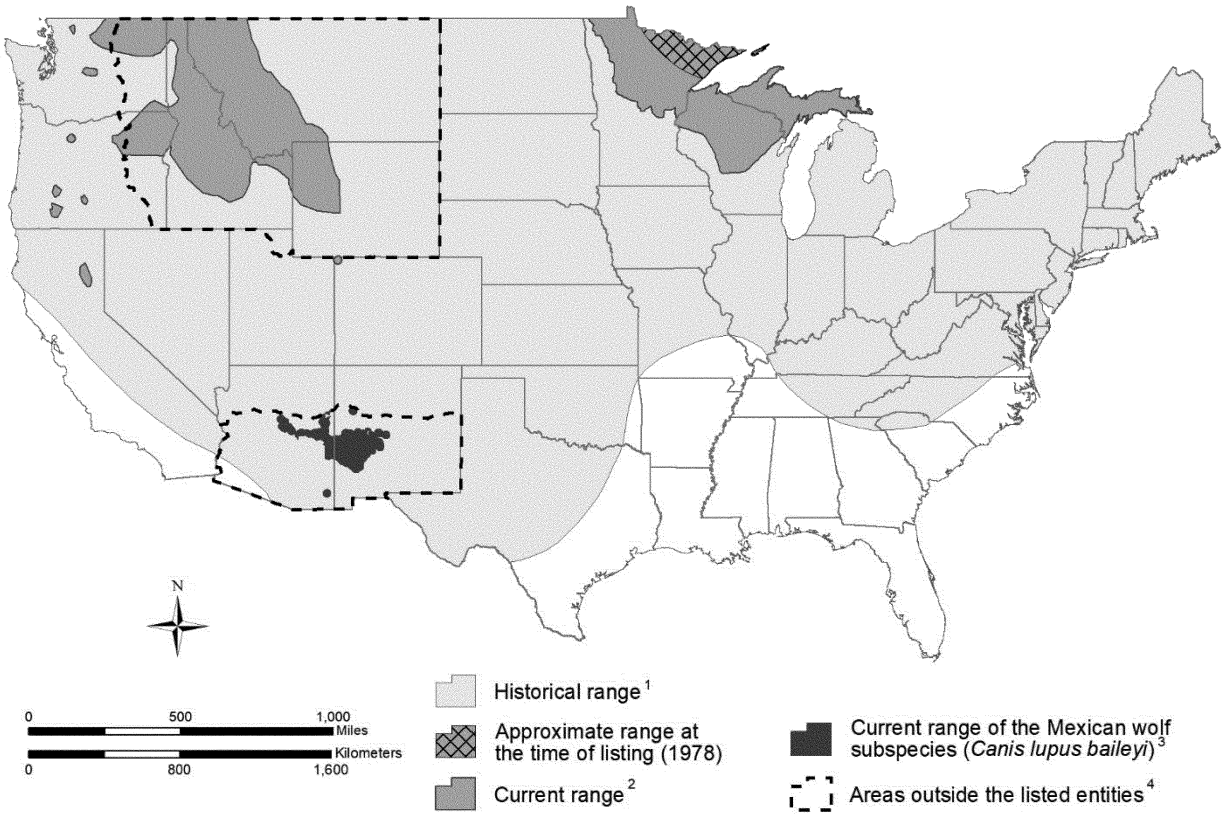

Figure 2. Historical range and current range of the gray wolf (*Canis lupus*) in the lower 48 United States.

[1]Based on Nowak (1995)—recognizing that the exact extent of historical range is uncertain, we chose Nowak (1995) as the historical range boundary in the East to encompass the largest reasonable historical distribution in the lower 48 United States, assuming that red wolves, and not gray wolves, occupied the Southeastern United States.

[2]Based on State data.

[3]United States portion of range only.

[4]NRM DPS and Mexican wolf nonessential experimental population area boundaries.

[3] A population that inhabits a larger, more continuous, higher quality habitat patch within a species' distribution and, consequently, is larger in size and more genetically diverse (due to higher gene flow), and has greater evolutionary potential and resilience to stochastic events than a population that inhabits smaller, more isolated, lower quality habitat patches.

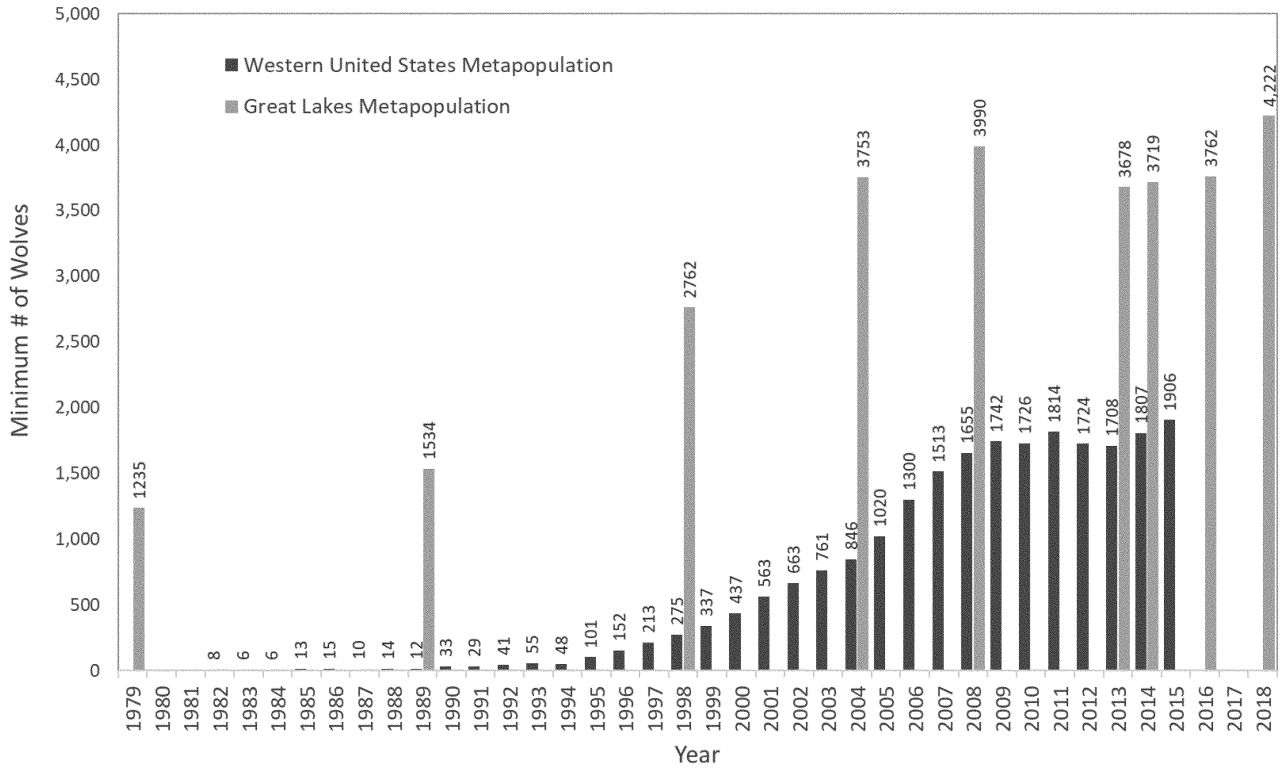

Figure 3. Minimum number of gray wolves (*Canis lupus*) counted in the lower 48 United States, 1979–2018. Does not include Mexican wolves. Great Lakes metapopulation counts are only given for years when data were available for all States in that region. Minimum counts for the entire Western United States metapopulation are not available after 2015 due to changes in State monitoring strategies (see USFWS 2020, pp. 15–17, Appendix 1 and 2 for more details).

Gray Wolf Recovery Plans and Recovery Implementation

Section 4(f) of the Act directs us to develop and implement recovery plans for the conservation and survival of endangered species and threatened species unless we determine that such a plan will not promote the conservation of the species (16 U.S.C. 1533(f)(1)). Recovery plans are non-regulatory documents that identify management actions that may be necessary to achieve conservation and survival of the species. They also identify objective, measurable criteria (recovery criteria) which, when met, may result in a determination that the species should be removed from the List. Methods for monitoring recovery progress may also be included in recovery plans.

Recovery plans provide a roadmap for us and our partners on methods of enhancing conservation and minimizing threats to listed species, as well as measurable criteria against which to evaluate progress towards recovery and assess the species' likely future condition. However, they are not regulatory documents and do not substitute for the determinations and promulgation of regulations required under section 4(a)(1) of the Act. A decision to revise the status of a species, or to delist a species is ultimately based on an analysis of the best scientific and commercial data available to determine whether a species is no longer an endangered species or a threatened species, regardless of whether that information differs from the recovery plan.

There are many paths to recover a species, and recovery may be achieved without all recovery criteria being fully met. For example, one or more criteria may be exceeded while other criteria may not yet be accomplished. In that instance, we may determine that the threats are minimized sufficiently and that the species is robust enough that it no longer meets the definition of an endangered species or a threatened species. In other cases, we may discover new recovery opportunities after having finalized the recovery plan. Parties seeking to conserve the species may use these opportunities instead of methods identified in the recovery plan. Likewise, we may learn new information about the species after we finalize the recovery plan. The new information may change the extent to which existing criteria are appropriate for identifying recovery of the species. The recovery of a species is a dynamic process requiring adaptive management that may, or may not, follow all of the guidance provided in a recovery plan.

The Act does not describe recovery in terms of the proportion of historical range that must be occupied by a species, nor does it imply that restoration throughout the entire historical range is required to achieve conservation. In fact, the Act does not contain the phrase ''historical range.'' Thus, the Act does not require us to restore the gray wolf (or any other species) to its entire historical range, or any specific percentage of currently suitable habitat. For some species, expansion of their distribution or abundance may be necessary to achieve recovery. The amount of expansion necessary is driven by the biological needs of the species for viability (ability

to sustain populations in the wild over time) and sustainability. Thus, there is no specific percentage of historical range or currently suitable habitat that must be occupied by the species to achieve recovery. Many other species may be recovered in portions of their historical range or currently suitable habitat by removing or addressing the threats to their continued existence. And some species may be recovered by a combination of range expansion and threat reduction.

As indicated in Previous Federal Actions, following our 1978 reclassification, we drafted recovery plans and implemented recovery programs for gray wolves in three regions of the lower 48 United States (table 1). Wolves in one of these regions—*C. l. baileyi,* in the Southwestern United States and Mexico—are listed separately as an endangered subspecies and are not assessed in this rule (see Approach for this Rule). Below, we discuss recovery of wolves in the other two regions—the Eastern United States and the northern Rocky Mountains.

Recovery Criteria for the Eastern United States

The 1978 Recovery Plan (hereafter Recovery Plan) and the 1992 Revised Recovery Plan for the Eastern Timber Wolf (hereafter Revised Recovery Plan) were developed to guide recovery of the eastern timber wolf subspecies in the Eastern United States. Those recovery plans contain the same two recovery criteria, which are meant to indicate when recovery of the eastern timber wolf throughout its historical range in the Eastern United States has been achieved. These criteria are: (1) The survival of the wolf in Minnesota is assured, and (2) at least one viable population of eastern timber wolves outside Minnesota and Isle Royale in the lower 48 States is reestablished.

The first recovery criterion, assuring the survival of the wolf in Minnesota, addresses a need for reasonable assurances that future State, Tribal, and Federal wolf management and protection will maintain a viable recovered population of wolves within the borders of Minnesota for the foreseeable future. Although the recovery criteria predate identification of the conservation biology principles of representation (conserving the adaptive diversity of a taxon), resiliency (ability to withstand demographic and environmental variation), and redundancy (sufficient populations to provide a margin of safety), the recovery criteria for the gray wolf in the Eastern United States are consistent with those principles. The Recovery Team concluded that the remnant Minnesota wolf population must be maintained and protected to achieve wolf recovery in the Eastern United States. Maintenance of the Minnesota wolf population is important in terms of representation because these wolves include both western gray wolves and wolves that are admixtures of western gray wolves and eastern wolves (see *Taxonomy of Gray Wolves in North America*) and are comparable to wolf populations that were present in the area historically. The successful growth of the remnant Minnesota population has maintained and maximized the representation of that genetic diversity among wolves in the Great Lakes area.

Maintenance of the Minnesota wolf population is also important in terms of resiliency. Although the Revised Recovery Plan did not establish a specific numerical criterion for the Minnesota wolf population, it did identify, for planning purposes, a population goal of 1,251–1,400 animals for the Minnesota population (USFWS 1992, p. 28). A population of this size not only increases the likelihood of maintaining its genetic diversity over the long term, but also reduces the adverse impacts of unpredictable demographic and environmental events. Furthermore, the Revised Recovery Plan recommends a wolf population that is spread across about 40 percent of Minnesota (Zones 1 through 4) (USFWS 1992, p. 28), adding a geographic component to the resiliency of the Minnesota wolf population.

The second recovery criterion states that at least one viable wolf population should be reestablished within the historical range of the eastern timber wolf outside of Minnesota and Isle Royale, Michigan (USFWS 1992, pp. 24–26). The reestablished population enhances both the resiliency and redundancy of the Great Lakes metapopulation.

The Revised Recovery Plan provides two options for reestablishing this second population. If it is an isolated population, that is, located more than 100 miles (mi) (160 kilometers (km)) from the Minnesota wolf population, the second population should consist of at least 200 wolves for at least 5 years, based upon late-winter population estimates, to be considered viable. Late-winter estimates are made at a time when most winter mortality has already occurred and before the birth of pups; thus, the count is made at the annual low point of the population. Alternatively, if the second population is located within 100 mi (160 km) of a self-sustaining wolf population (for example, the Minnesota wolf population), it should be maintained at a minimum of 100 wolves for at least 5 years, based on late-winter population estimates, to be considered viable. A nearby second population would be considered viable at a smaller size because it would be closely tied with the Minnesota population, and by occasional immigration of Minnesota wolves, would retain sufficient genetic diversity to cope with environmental fluctuations.

The original Recovery Plan did not specify where in the Eastern United States the second population should be reestablished. Therefore, the second population could have been established anywhere within the triangular Minnesota-Maine-Florida area covered by the Recovery Plan and the Revised Recovery Plan, except on Isle Royale (Michigan) or within Minnesota. The Revised Recovery Plan identified potential gray wolf reestablishment areas in northern Wisconsin, the Upper Peninsula of Michigan, the Adirondack Forest Preserve of New York, a small area in eastern Maine, and a larger area of northwestern Maine and adjacent northern New Hampshire (USFWS 1992, pp. 56–58). Neither the 1978 nor the 1992 recovery criteria indicate that the establishment of gray wolves throughout all or most of what was thought to be its historical range in the Eastern United States, or within all of the identified potential reestablishment areas, is necessary to achieve recovery under the Act.

Recovery Progress in the Eastern United States

Wolves in the Great Lakes area greatly exceed the recovery criteria (USFWS 1992, pp. 24–26) for (1) a secure wolf population in Minnesota, and (2) a second population outside Minnesota and Isle Royale consisting of 100 wolves within 100 mi (160 km) of Minnesota for 5 successive years. Based on the surveys conducted since 1998, the wolf population in Minnesota has exceeded 2,000 individuals over the past 20 years, and populations in Michigan and Wisconsin, which are less than 100 mi (160 km) from the Minnesota population, have exceeded 100 individuals every year since 1994 (USFWS 2020, Appendix 1). Based on the criteria set by the Eastern Wolf Recovery Team in 1992 and reaffirmed in 1997 and 1998 (Peterson in litt. 1997, Peterson in litt. 1998, Peterson in litt. 1999a, Peterson in litt. 1999b), this region contains sufficient wolf numbers and distribution to ensure the long-term survival of gray wolves in the Eastern United States.

The maintenance and expansion of the Minnesota wolf population has allowed for the preservation of the genetic diversity that remained in the Great Lakes area when its wolves were first protected in 1974. The Wisconsin–Michigan wolf population far exceeds the numerical recovery criterion, even for a completely isolated second population. Therefore, even in the unlikely event that this two-State population were to become totally isolated and wolf immigration from Minnesota and Ontario completely ceased, it would still remain a viable wolf population for the foreseeable future, as defined by the Revised Recovery Plan (USFWS 1992, pp. 25–26). Finally, each of the wolf populations in Wisconsin and Michigan has exceeded 200 animals for about 20 years, so if either were somehow to become isolated, they would remain viable. Furthermore, each State has committed to manage its wolf population above viable population levels (see Post-delisting Management). The wolf's numeric and distributional recovery criteria for the Eastern United States have been met.

Recovery Criteria for the NRM

The NRM Wolf Recovery Plan was approved in 1980 (USFWS 1980, p. i) and revised in 1987 (USFWS 1987, p. i). The wolf recovery goal for the NRM was reevaluated and, when necessary, modified as new scientific information warranted (USFWS 1987, p. 12; USFWS 1994, Appendix 8 and 9; Fritts and Carbyn 1995, p. 26; Bangs 2002, p. 1; 73 FR 10514, February 27, 2008; 74 FR 15130–15135, April 2, 2009). The Service's resulting recovery goal for the NRM gray wolf population was: 30 or more breeding pairs comprising at least 300 wolves equitably distributed among Montana, Idaho, and Wyoming for 3 consecutive years, with genetic exchange (either natural or, if necessary, agency managed) between subpopulations. To provide a buffer above these minimum recovery levels, each State was to manage for at least 15 breeding pairs and 150 wolves in mid-winter (77 FR 55538–55539, September 10, 2012; 74 FR 15132, April 2, 2009). Further, the post-delisting monitoring plan stipulated that three scenarios could lead us to initiate a status review and analysis of threats to determine if relisting was warranted: (1) If the wolf population in Idaho, Montana, or Wyoming fell below the minimum NRM wolf population recovery level of 10 breeding pairs and 100 wolves at the end of any one year; (2) if the portion of the wolf population in Montana, Idaho, or Wyoming falls below 15 breeding pairs or 150 wolves at the end of the year in any one of those States for 3 consecutive years; or (3) if a change in State law or management objectives would significantly increase the threat to the wolf population. For additional information on NRM wolf recovery goals and their evolution over time, see 74 FR 15130–15135 and references therein.

Recovery Progress in the NRM DPS

As indicated in Previous Federal Actions, wolves in the NRM DPS have recovered and were delisted (table 1). The NRM wolf population achieved its numerical and distributional recovery goals at the end of 2000 (USFWS et al. 2008, table 4). The temporal portion of the recovery goal was achieved in 2002 when the numerical and distributional recovery goals were exceeded for the 3rd successive year (USFWS et al. 2008, table 4). In 2009, we concluded that wolves in the NRM DPS far exceeded recovery goals. We also concluded that ''The NRM wolf population: (1) Has at least [45] reproductively successful packs and [450] individual wolves each winter (near the low point in the annual cycle of a wolf population); (2) is equitably distributed within the 100,000 mi^2 (250,000 km^2) area containing 3 areas of large core refugia (National Parks, wilderness areas, large blocks of remote secure public land) and at least 65,725 mi^2 (170,228 km^2) of suitable wolf habitat; and (3) is genetically diverse and has demonstrated successful genetic exchange through natural dispersal and human-assisted migration management between all three core refugia'' (74 FR 15133, April 2, 2009). Post-delisting and subsequent monitoring, and the expansion of the NRM population into western Washington, western Oregon, northern California, and, likely, Colorado (USFWS 2020, pp. 15–19, 28; see also *Current Distribution and Abundance*), indicate that the wolf population in the NRM DPS remains well above minimum recovery levels (see *Current Distribution and Abundance*).

Historical Context of Our Analysis

When reviewing the current status of a species, it is important to understand and evaluate the effects of lost historical range on the viability of the species. In fact, when we consider the status of a species, we are considering whether the species is currently (*i.e.,* without the species' occupying parts of its historical range) an endangered species or threatened species. Range reduction may result in: Reduced numbers of individuals and populations; changes in available resources (such as food) and, consequently, carrying capacity; changes in demographic characteristics (survival, reproductive rate); changes in population distribution and structure; and changes in genetic diversity and gene flow. These, in turn, can increase a species' vulnerability to a wide variety of threats, such as habitat loss, restricted gene flow, reduced genetic diversity, or having all or most of its populations affected by a catastrophic event. In other words, past range reduction can reduce the redundancy, resiliency, and representation of a species in its current range, such that a species may meet the definition of an ''endangered species'' or ''threatened species'' under the Act. Thus, loss of historical range is not necessarily determinative of a species' status; rather, it must be considered in the context of other factors affecting a species. In addition to considering the effects that loss of historical range has had on the current and future viability of the species, we must also consider the causes of that loss of historical range. If the causes of the loss are ongoing, then that loss is also relevant as evidence of the effects of an ongoing threat.

As indicated above, gray wolves historically occupied a large portion of the lower 48 United States (see figure 2). The range of the gray wolf began receding after the arrival of Europeans as a result of deliberate killing of wolves by humans and government-funded bounty programs aimed at eradication (USFWS 2020, pp. 10–13). Further, many historical habitats were converted into agricultural land (Paquet and Carbyn 2003, p. 483), and natural food sources such as deer and elk were reduced, eliminated, or replaced with domestic livestock, which can become anthropogenic food sources for gray wolves (Young 1944 *in* Fritts et al. 1997, p. 8). The resulting reductions in range and population were dramatic—by the 1970s, gray wolves occupied only a small fraction of their historical range (figure 2). Although the range of the gray wolf in the lower 48 United States has significantly expanded since 1978, its size and distribution remain below historical levels. The alterations to gray wolf historical range in the lower 48 United States increased the vulnerability of gray wolves in the lower 48 United States to a wide variety of threats that would not be at issue without such range reduction. We analyze these potential threats to gray wolves in the lower 48 United States below (see Summary of Factors Affecting the Species).

Regulatory Framework

Section 4 of the Act (16 U.S.C. 1533) and its implementing regulations (50 CFR part 424) set forth the procedures for determining whether a species is an ''endangered species'' or a ''threatened species.'' The Act defines an endangered species as a species that is ''in danger of extinction throughout all or a significant portion of its range,'' and a threatened species as a species that is ''likely to become an endangered species within the foreseeable future throughout all or a significant portion of its range.'' The Act requires that we determine whether any species is an ''endangered species'' or a ''threatened species'' because of any of the following factors:

(A) The present or threatened destruction, modification, or curtailment of its habitat or range;

(B) overutilization for commercial, recreational, scientific, or educational purposes;

(C) disease or predation;

(D) the inadequacy of existing regulatory mechanisms; and

(E) other natural or manmade factors affecting its continued existence.

These factors represent broad categories of natural or human-caused actions or conditions that could have an effect on a species' continued existence. In evaluating these actions and conditions, we look for those that may have a negative effect on individuals of the species, as well as other actions or conditions that may ameliorate any negative effects or may have positive effects.

We use the term ''threat'' to refer in general to actions or conditions that are known to or are reasonably likely to negatively affect individuals of a species. The term ''threat'' includes actions or conditions that have a direct impact on individuals (direct impacts), as well as those that affect individuals through alteration of their habitat or required resources (stressors). The term ''threat'' may encompass—either together or separately—the source of the action or condition or the action or condition itself.

However, the mere identification of any threat(s) does not necessarily mean that the species meets the statutory definition of an ''endangered species'' or a ''threatened species.'' In determining whether a species meets either definition, we must evaluate all identified threats by considering the species' expected response, and the effects of the threats—in light of those actions and conditions that will ameliorate the threats—on an individual, population, and species level. We evaluate each threat and its expected effects on the species, then analyze the cumulative effect of all of the threats on the species as a whole. We also consider the cumulative effect of the threats in light of those actions and conditions that will have positive effects on the species, such as any existing regulatory mechanisms or conservation efforts. The Secretary determines whether the species meets the definition of an ''endangered species'' or a ''threatened species'' only after conducting this cumulative analysis and describing the expected effect on the species now and in the foreseeable future.

The Act does not define the term ''foreseeable future,'' which appears in the statutory definition of ''threatened species.'' Since publication of our proposed rule (84 FR 9648, March 15, 2019), the Service codified its understanding of foreseeable future at 50 CFR 424.11(d) (84 FR 45020). In those regulations, we explain the term ''foreseeable future'' extends only so far into the future as the Services can reasonably determine that both the future threats and the species' responses to those threats are likely. The Service will describe the foreseeable future on a case-by-case basis, using the best available data and taking into account considerations such as the species' life-history characteristics, threat-projection timeframes, and environmental variability. The Service need not identify the foreseeable future in terms of a specific time period. These regulations did not significantly modify the Service's interpretation; rather they codified a framework that sets forth how the Service will determine what constitutes the foreseeable future based on our longstanding practice. Accordingly, though these regulations do not apply to the determinations for the entities assessed in this final rule because it was proposed prior to their effective date, they do not change the Service's assessment of foreseeable future for the entities assessed in our proposed rule and in this determination.

It is not always possible or necessary to define foreseeable future as a particular number of years. Analysis of the foreseeable future uses the best scientific and commercial data available and should consider the timeframes applicable to the relevant threats and to the species' likely responses to those threats in view of its life-history characteristics. Data that are typically relevant to assessing the species' biological response include species-specific factors such as lifespan, reproductive rates or productivity, certain behaviors, and other demographic factors.

For the purposes of this rule, and consistent with our proposed rule, we define the ''foreseeable future'' to be the extent to which, given the amount and substance of available data, we can anticipate events or effects, or reliably extrapolate threat trends that relate to the status of wolves within the lower 48 United States. The Great Lakes States of Minnesota, Wisconsin, and Michigan have an established history of cooperating with and assisting in wolf recovery and have made a commitment, through legislative actions, to continue these activities. Washington, Oregon, California, Colorado, and Utah are also committed to wolf conservation, as demonstrated by development of management plans and/or codification of laws and regulations protecting wolves (see Post-delisting Management). The best available information indicates that the Great Lakes States, West Coast States, and central Rocky Mountain States (Colorado and Utah) are committed to gray wolf conservation, and, therefore, we conclude that this commitment is likely to continue into the foreseeable future. Further, the NRM States have, for years, demonstrated their commitment to managing their wolf populations at or above recovery levels and the best available information indicates that this commitment will continue into the foreseeable future.

Summary of Factors Affecting the Species

Wolves within the lower 48 United States are currently listed as endangered under the Act, except wolves in Minnesota, which are listed as threatened, and wolves in the NRM DPS, which were delisted due to recovery (74 FR 15123, April 2, 2009, and 77 FR 55530, September 10, 2012). In this analysis we evaluate threat factors currently affecting wolves within the lower 48 United States and those that are reasonably likely to have a negative effect on the viability of wolves within the lower 48 United States if the protections of the Act are removed. As explained in our significant portion of the range (SPR) final policy (79 FR 37578, July 1, 2014), we take into account the effect lost historical range may have on the current and future viability of a species in the range it currently occupies and also evaluate whether the causes of that loss are evidence of ongoing or future threats to the species. We do this through our analysis of the five factors described in section 4(a)(1) of the Act. A species' current condition reflects the effects of historical range loss, and, because threat

factors are evaluated in the context of the species' current condition, historical range contraction may affect the outcome of our analysis.

Based on our review of the best available scientific and commercial information, we have identified several factors that could be significant threats to wolves within the lower 48 United States. We summarize our analysis of these factors, and factors identified at the time of listing, below. Due to recent information confirming the presence of a group of six wolves in extreme northwest Colorado, and their proximity to and potential use of habitats within Utah, we included these States in our analysis.

Human-Caused Mortality

At the time of listing, human-caused mortality was identified as the main factor responsible for the decline of gray wolves (43 FR 9611, March 9, 1978). An active eradication program is the sole reason that wolves were extirpated from much of their historical range in the United States (Weaver 1978, p. i). European settlers attempted to eliminate the wolf entirely, primarily due to the real or perceived threats to livestock, and the U.S. Congress passed a wolf bounty that covered the Northwest Territories in 1817. Bounties on wolves subsequently became the norm for States across the species' range (Hampton 1997, pp. 107–108; Beyer et al. 2009, p. 66; Erb and DonCarlos 2009, p. 50; Wydeven et al. 2009b, p. 88; USFWS 2020, pp. 10–13). For example, in Michigan, an 1838 wolf bounty became the ninth law passed by the First Michigan Legislature.

After the gray wolf was listed under the Act, its protections, along with State endangered-species statutes, prohibited the intentional killing of wolves except under very limited circumstances. Such circumstances included defense of human life, scientific or conservation purposes, and special regulations intended to reduce wolf depredations of livestock or other domestic animals. Aside from the reintroduction of wolves into portions of the northern Rocky Mountains, the regulation of human-caused wolf mortality is the primary reason wolf numbers have significantly increased and their range has expanded since the mid-to-late 1970s (Smith et al. 2010, entire; O'Neil et al. 2017, entire; Stenglein et al. 2018, entire).

The regulation of human-caused mortality has long been recognized as the most significant factor affecting the long-term conservation of wolves. Human-caused mortality includes both controllable and uncontrollable sources of mortality. Controllable sources of mortality are discretionary, can be limited by the managing agency, and include permitted take, sport hunting, and direct agency control. Sources of mortality that will be difficult to limit, or may be uncontrollable, occur regardless of population size and include things such as natural mortalities, illegal take, and accidental deaths (*e.g.,* vehicle collisions, capture-related mortalities). However, if population levels and controllable sources of mortality are adequately regulated, the life-history characteristics of wolf populations provide natural resiliency to high levels of human-caused mortality.

Two Minnesota studies provide some limited insight into the extent of human-caused wolf mortality before and after the species' listing. Examining bounty data from a period that predated wolf protection under the Act by 20 years, Stenlund (1955, p. 33) found an annual human-caused mortality rate of 41 percent. Fuller (1989, pp. 23–24) evaluated data from a north-central Minnesota study area and found an annual human-caused mortality rate of 29 percent from 1980 through 1986, which includes 2 percent mortality from legal depredation-control actions. However, it is difficult to draw conclusions from comparisons of these two studies because of differences in habitat quality, exposure to humans, prey density, time periods, and study design. Nonetheless, these figures indicate that human-caused mortality decreased significantly once the wolf became protected under the Act.

Humans kill wolves for a number of reasons. In locations where people, livestock, and wolves coexist, some wolves are killed to resolve conflicts with livestock and pets (Fritts et al. 2003, p. 310; Woodroffe et al. 2005, pp. 86–107, 345–347). Occasionally, wolves are killed accidentally by vehicles, mistaken for coyotes and shot, caught in traps set for other animals, or subject to accidental capture-related mortality during conservation or research efforts (Bangs et al. 2005, p. 346). A few wolves have been killed by people who believed their physical safety was being threatened. Many wolf killings, however, are intentional, illegal, and never reported to authorities.

Although survival can be highly variable across populations (Fuller et al. 2003, pp. 176–181), recent estimated annual mortality rates for wolves greater than 1 year of age are relatively consistent among some U.S. populations and range between 20 to 25 percent (Adams et al. 2008, pp. 11–12; Smith et al. 2010, p. 625; Cubaynes et al. 2014, p. 5; O'Neil et al. 2017, p. 9523; Stenglein et al. 2018, p. 104). Outside of very remote areas and large protected areas such as Yellowstone and Isle Royale National Parks, anthropogenic causes are the greatest source of mortality for most wolves in the lower 48 United States. Such causes are estimated to account for 60–70 percent of all mortalities in the NRM wolf population (Murray et al. 2010, p. 2518), Michigan (O'Neil 2017, p. 214) and Wisconsin (Treves et al. 2017a, p. 27; Stenglein et al. 2018, p. 108) and nearly 80 percent in Minnesota (Fuller 1989, p. 24). The risk of human-caused mortality is not uniform, however, and tends to be highest for dispersing animals (Smith et al. 2010, pp. 630–631) and for wolves that occupy less suitable habitats generally found on the peripheries of occupied wolf range (Smith et al. 2010, pp. 630–631; O'Neil et al. 2017, pp. 9524–9528; Stenglein et al. 2018, p. 109).

In the absence of high levels of human-caused mortality, for example in Yellowstone and Isle Royale National Parks, wolf populations tend to be regulated by density-dependent, intrinsic mechanisms (Fuller et al. 2003, pp. 187–188; Cubaynes et al. 2014, pp. 9–11). Outside of such areas, where anthropogenic influences are greater, the influence of human-caused mortality on wolf populations may be considered either additive (mortality in excess of the number of deaths that would have occurred naturally) or compensatory (mortality that replaces deaths that would have occurred naturally). Some studies have concluded that anthropogenic mortality may be super-additive (increased additive mortality beyond the effect of direct killing itself) due to the effects increased take may have on the reproductive dynamics of wolves and packs (Creel and Rotella 2010, p. 3). Another study implied super-additive mortality occurred through increased legal take, which prompted a concurrent increase in illegal take that reduced reproductive output and population growth rates (Chapron and Treves 2016, p. 5); however, the claims of that study have been questioned (Olson et al. 2017, entire; Pepin et al. 2017, entire; Stein 2017, entire). Another study documented that harvest mortality was largely additive to natural mortality and that evidence for super-additive mortality was weak in Idaho (Horne et al. 2019a, pp. 40–41). Murray et al. (2010, pp. 2522–2523) noted anthropogenic mortality was partially compensatory in the NRM wolf population; however, as population density increased, human-caused

mortality became increasingly additive (Murray et al. 2010, pp. 2522–2523), a trend that was also observed in Michigan (O'Neil 2017, pp. 201–229). In Wisconsin, Stenglein et al. (2018, pp. 106–108) noted a different trend in which mortality was largely additive prior to 2004, whereas it became partially compensatory after 2004 as wolves began to occupy most of the available suitable habitat in the State. Borg et al. (2014, pp. 7–9) documented that strong compensatory mechanisms buffered against long-term population-level impacts of breeder loss and pack dissolution in Denali National Park. Fuller et al. (2003, p. 186) concluded that human-caused mortality can replace up to 70 percent of natural mortality in wolf populations. Increased levels of human-caused mortality in wolf populations can be compensated for by a reduction in natural mortality (O'Neil 2017, pp. 201–229), dispersal to fill social openings (Fuller et al. 2003, p. 186; Adams et al. 2008, pp. 20–21; Smith et al. 2010, pp. 630–633; Bassing et al. 2019, pp. 585–586), or reproduction (Gude et al. 2012, pp. 113–114; Schmidt et al. 2017, p. 25). Similarities in survival rates among wolf populations subject to different levels of human-caused and other forms of mortality (see above for discussion about survival/mortality rates) indicates a moderate level of compensation in mortality occurs in wolf populations. It further indicates that moderate increases in human-caused mortality may not have a large effect on annual wolf survival (O'Neil 2017, p. 220).

Increased human-caused mortality may either increase or decrease wolf dispersal rates depending on various factors. For example, if wolf harvest is significant, it can reduce wolf densities leading to an overall decline in dispersal events due to a reduction in the number of individuals available to disperse, reduced competition for resources within the pack, or through direct removal of dispersing animals (Packard and Mech 1980, p. 144; Gese and Mech 1991, p. 2949; Adams et al. 2008, pp. 16–18). Trapping, in particular, may remove the age classes most likely to disperse because younger, less experienced wolves are often more vulnerable to this form of harvest. In a heavily harvested population with a significant portion of the harvest from trapping, long open seasons, and no bag limits, dispersal rates were observed to be up to 50 percent less than in unexploited populations (Webb et al. 2011, pp. 748–749). However, there appears to be considerable variability in dispersal rates from harvested populations that likely depends on a number of factors, including prey availability, pack size, harvest rates, and whether or not harvest was biased toward certain age-classes (Hayes and Harestad 2000, pp. 43–44; Webb et al. 2011, pp. 748–749). Jimenez et al. (2017, p. 588) found that increased human-caused mortality (illegal take and agency lethal control) removed individual wolves and entire packs, and thereby provided a constant source of social openings or vacant habitat for wolves to recolonize. However, long-distance dispersals still occurred at low wolf density even when vacant habitat was nearby. Using data from 197 GPS-collared wolves from 65 wolf packs in Idaho to construct an integrated population model, Horne et al. (2019a, p. 40) found that variation in harvest rates did not translate to changes in the propensity for wolves to disperse. The authors speculated that harvest rates in their study were not high enough to cause widespread breeding vacancies and increased dispersal behavior.

In wolf populations that are not hunted, lethal control of depredating wolves (see below for discussion) and illegal take are the two primary anthropogenic causes of mortality. In the NRM, Smith et al. (2010, p. 625) estimated that illegal take accounted for 24 percent of all mortalities (or approximately 6 percent of the population); however, 12 percent of the documented mortalities were attributed to unknown causes, so it is highly plausible that the number of wolves illegally taken may have been higher (Liberg et al. 2012, p. 914; O'Neil 2017, pp. 220–221; Treves et al. 2017b, p. 7). Ausband et al. (2017a, p. 7) used radio-collared wolves to estimate that 8.2 percent of the Idaho wolf population was illegally killed annually while the annual rate of illegal take in Michigan was estimated at approximately 9 percent (O'Neil 2017, p. 214). In Wisconsin, it was estimated that 9 percent of wolves were killed illegally (Stenglein et al. 2018; p. 104) while Stenglein et al. (2015b, p. 1183) concluded that as many as 400 wolves were illegally killed but were not detected between 2003 and 2012. Another study conducted outside of the lower 48 United States estimated the percentage of unknown illegal take that occurred and estimated that approximately 69 percent of all poaching incidents were undocumented (Liberg et al. 2012, p. 912). Similarly, Treves et al. (2017b, entire) concluded that illegal take was the primary cause of wolf mortality and that the relative risk of poaching was grossly underestimated in both the NRM and Wisconsin. We acknowledge the challenges of documenting and estimating illegal take, and note that illegal take may have slowed wolf population growth in the lower 48 United States to some extent (Liberg et al. 2012, entire; Stenglein et al. 2018, p. 105). However, based on wolf minimum counts and population estimates (USFWS 2020, Appendix 1 and 2), illegal take, whether documented or not, has not prevented recovery of the species, the maintenance of viable wolf populations, or the continued recolonization of vacant, suitable habitat.

Vehicle collisions also contribute to wolf mortality. The total number of wolf mortalities associated with vehicle collisions is expected to rise with increasing wolf populations as wolves attempt to colonize more human-dominated areas that contain a denser network of roads and vehicular traffic. However, mortalities associated with vehicle collisions are unlikely to increase as a percentage of the total wolf population if increases occur concurrently. Regardless, mortalities from vehicle collisions will likely continue to constitute a small proportion of total wolf mortalities.

Neither scientific research nor the use of wolves for educational purposes are significant sources of human-caused mortality. Each of the States in the current range of gray wolves in the lower 48 United States conduct scientific research and monitoring of wolf populations. Even the most intensive and disruptive of these activities (ground or aerial capture for the purpose of radio-collaring) involves a very low rate of mortality for wolves (73 FR 10542, February 27, 2008). We expect that capture-related mortality during wolf monitoring, nonlethal control, and research activities will remain low, and will have an insignificant impact on population dynamics.

The best available information does not indicate any wolves have been removed from the wild solely for educational purposes in recent years. Wolves that are used for such purposes are typically privately held, captive-reared offspring of wolves that were already in captivity for other reasons. However, States may get requests to place wolves that would otherwise be euthanized in captivity for research or educational purposes. Such requests have been and will continue to be rare, would be closely regulated by the State wildlife-management agencies through the requirement for State permits for protected species, and would not

substantially increase human-caused wolf mortality rates.

Some federally listed wolves have been legally removed by private citizens in the lower 48 United States through defense of life or property statutes. It is a rare occurrence for non-habituated wild wolves in North America to pose a threat to humans (McNay 2002, pp. 836–837); nonetheless, on rare occasions, humans have killed wolves due to a real or perceived threat to their safety or the safety of others, which is permissible even under the Act's protections. For example, since wolves began recolonizing the West Coast States in 2008, a single wolf has been killed by a private individual who claimed self-defense in the federally listed portion of Washington. Under the rules that governed Federal wolf management for nonessential experimental populations under section 10(j) of the Act in portions of the NRM DPS (59 FR 60252 and 59 FR 60266, November 22, 1994; 70 FR 1286, January 6, 2005; 73 FR 4720, January 28, 2008), private individuals were lawfully allowed to kill a wolf in defense of property provided the incident was immediately reported to the Service and an investigation confirmed evidence of an attack. To our knowledge, most States within occupied wolf range already have rules and regulations related to the taking of wildlife when life or property are threatened and the taking of wolves under these circumstances will be regulated under the same rules post-delisting. Although the number of wolves lawfully killed in defense of human life and property by private individuals may be slightly higher in areas with greater human or livestock density and may increase after delisting as authority for this action expands, overall this type of mortality is rare and is not expected to have a significant impact on gray wolf populations in the lower 48 United States. For information related to defense of life or property mortalities, refer to the Post-delisting Management section of this rule for the Great Lakes area and the Human-caused Mortality in the NRM DPS section for the NRM DPS.

The use of lethal depredation control to mitigate wolf-human conflicts or to minimize risk associated with repeated livestock depredations will likely increase in the lower 48 United States after delisting. Although most wolf conflicts are rare or one-time incidents that do not require management action or may be resolved using preventative or nonlethal methods, in some instances lethal control by wildlife management agencies or private individuals is used to resolve imminent threats to human life or property or to minimize the risk of recurrent conflicts. The number of wolves killed for this purpose in the lower 48 United States is small when compared to the greater population (see information in subsequent paragraph). With respect to the area of the lower 48 United States currently listed as endangered (see figure 1), lethal control of depredating wolves is not currently authorized; however, after delisting, State and Tribal wildlife agencies may choose to use lethal control as a mitigation response.

Human-Caused Mortality in the Currently Listed Entities

Lethal control of depredating wolves was authorized in Minnesota while wolves were listed under the authority of 50 CFR 17.40(d) pursuant to section 4(d) of the Act. However, such control was not authorized in Michigan or Wisconsin, except (1) as authorized under section 4(d) when the population was reclassified to threatened (from April 13, 2003, to January 31, 2005), (2) by special permits (from April 1, 2005, to September 13, 2005, and from April 24, 2006, to August 10, 2006), and (3) when delisted (from March 12, 2007, to September 29, 2008, May 4, 2009, to July 1, 2009, and January 27, 2012, to December 19, 2014). The depredation control program in Minnesota killed between 6 and 216 wolves annually from 1979 to 2006. The 5-year annual average of statewide populations for wolves killed ranged from 26 (2 percent of the estimated population) to 152 (7 percent of the estimated population) during that time period (Ruid et al. 2009, p. 287). During the periods when wolves were managed under the 4(d) rule in the State, the Minnesota wolf population continued to grow or remain stable. During the times that lethal control of depredating wolves was authorized in Wisconsin and Michigan, there was no evidence of resulting adverse impacts to the maintenance of a viable wolf population in those States. In Wisconsin, during the almost 5 years (cumulative over three different time periods) that lethal depredation control was allowed in the State, a total of 256 wolves were killed for this purpose, including 46 legally shot by private landowners. A total of 64 wolves were killed in Michigan (half of these (32) were legally killed by private landowners) in response to depredation events during the same nearly 5-year period (cumulative over three different time periods). Following delisting, we anticipate that wolf depredation control would occur in Wisconsin and Michigan consistent with their State management plans. We anticipate the level of mortality due to depredation control would be similar to what was observed during previous periods when wolves were delisted. See the Post-delisting Management section for a more detailed discussion of legal control of problem wolves (primarily for depredation control).

Regulated public harvest is another form of human-caused mortality that has occurred in the Great Lakes area during periods when wolves were delisted, and will likely occur in Minnesota, Wisconsin, and Michigan if wolves are delisted again. Using an adaptive-management approach that adjusts harvest based on population estimates and trends, the initial objectives of States may be to reduce or stabilize wolf populations and then manage for sustainable populations, similar to how States manage all other hunted species. See the Post-delisting Management section for a more detailed discussion of legal harvest.

Regulation of human-caused mortality has significantly reduced the number of wolf mortalities caused by humans and, although illegal and accidental killing of wolves is likely to continue with or without the protections of the Act, at current levels those mortalities have had minimal impact on wolf abundance or distribution. We assume that legal human-caused mortality will increase when wolves are delisted as State managers continue or have the ability to implement lethal control to mitigate repeated conflicts with livestock and decide whether to incorporate regulated public harvest to assist in achieving wolf management objectives in their respective States. However, the high reproductive potential of wolves, and their innate behavior to disperse and locate social openings or vacant suitable habitats, allows wolf populations to withstand relatively high rates of human-caused mortality (USFWS 2020, pp. 8–9).

The States of Minnesota, Michigan, and Wisconsin have committed to continue to regulate human-caused mortality so that it does not reduce the wolf population below recovery levels. We conclude that the States have adequate laws and regulations to fulfill those commitments and ensure that the wolf population in the Great Lakes area remains above recovery levels (See Post-delisting Management). Washington, Oregon, California, Colorado, and Utah are also committed to conserving wolves as demonstrated by the development of management plans and/or codification of laws and regulations that protect wolves. Furthermore, each post-delisting management entity (State, Tribal, and Federal) has experienced

and professional wildlife staff to ensure those commitments can be accomplished.

Human-Caused Mortality in the NRM DPS

After gray wolves were afforded Federal protections under the Act in 1974, an interagency team began recovery planning for wolves in the West. The team identified three recovery areas in the NRM that included northwest Montana, central Idaho, and the Greater Yellowstone Area (GYA; USFWS 1987, pp. v, 13). These areas were selected because they contained large contiguous blocks of Federal public lands, had abundant ungulate populations, and relatively low numbers of livestock that were seasonally grazed on Federal allotments. It was further recognized that control of depredating wolves would be an important aspect of the recovery planning process and the eventual management of gray wolves (USFWS 1980, pp. 14–15; USFWS 1987, pp. v–vi, 9, 14–15, 33–35; USFWS 1994, entire; Bangs et al. 2009, p. 97). In 1994, the Service designated portions of Idaho, Montana, and Wyoming as two nonessential experimental population areas for the gray wolf under section 10(j) of the Act, which facilitated the 1995 and 1996 reintroduction of gray wolves into these areas and offered more flexibility to manage conflicts than was otherwise allowed for an endangered species (USFWS 1994; 59 FR 60252 and 59 FR 60266, November 22, 1994). Wolves in northwest Montana retained their classification as endangered because natural recolonization from Canada had already begun in the 1980s (USFWS 1994; 59 FR 60252 and 59 FR 60266, November 22, 1994). In 2005 and again in 2008, section 10(j) rules governing management of the nonessential experimental wolf populations were revised to clarify terms and allow limited increases in management flexibility to mitigate wolf conflicts (for further information see 70 FR 1286, January 6, 2005; 73 FR 4720, January 28, 2008). The information provided below for the delisted NRM wolf population includes wolves that inhabit the three wolf recovery areas in the NRM States of Idaho, Montana, and Wyoming and does not include wolves that have naturally recolonized portions of Oregon and Washington within the NRM unless specifically noted.

After wolf reintroduction, a rapid increase in the number and distribution of wolves occurred due to the availability of high-quality, suitable wolf habitat in the NRM. Between 1995 and 2008, wolf populations in the NRM increased an average of 24 percent annually (USFWS et al. 2016, table 6b) while from 1999 to 2008, total wolf mortality (includes all forms of known wolf mortality) averaged approximately 16 percent of the minimum known wolf population each year (USFWS et al. 2000–2009, entire). Wolf numbers and distribution stabilized after 2008 as suitable habitat became increasingly saturated (74 FR 15160, April 2, 2009). Between 2009 and 2015, some or all of the NRM States (depending upon the Federal status of wolves at that time; see table 1) began to manage wolves with the objective of reversing or stabilizing population growth while continuing to maintain wolf populations well above Federal recovery targets. The primary method used to manage wolf populations and achieve management objectives is through regulated public harvest. As a result, during those years when legal harvest occurred, total wolf mortality in the NRM increased to an average of 29 percent of the minimum known population (USFWS et al. 2010–2016, entire), while population growth declined to an average of approximately 1 percent annually (USFWS et al. 2010–2016, entire). Where high levels of wolf mortality occur, the species' reproductive capacity and dispersal capability can compensate for mortality rates of 17 to 48 percent (USFWS 2020, pp. 8–9), this appears to be the case in the NRM. As of 2015, the final year of a combined NRM wolf count due to the end of federally required post-delisting monitoring in Idaho and Montana, wolf populations in the NRM remained well above minimum recovery levels with a minimum known population of 1,704 wolves distributed across Idaho, Montana, and Wyoming. An additional 177 wolves were documented in the NRM portions of Oregon and Washington at the end of 2015.

Non-human related wolf mortalities may be biased low because a relatively small percentage of wolves in the NRM had known fates. Nonetheless, an average of 3 percent of known wolf mortalities were due to non-human causes (*e.g.,* natural and unknown causes) through 2008 (USFWS et al. 2000–2009, entire). Although the variability in the range of non-human related wolf mortalities declined, the percent of non-human related wolf mortalities dropped slightly to an average of 2 percent of the minimum known population annually between 2009 and 2015 (USFWS et al. 2010–2016, entire). Given the low level of non-human related wolf mortalities documented in the NRM, even assuming the estimate is biased low, we conclude that the effects of this type of mortality on wolf populations are not significant.

Outside of very remote or large protected areas, human-caused mortality accounts for the majority of the documented wolf mortalities annually, and wolves in the NRM are no exception. Between 1999 and 2008, when gray wolves were federally listed (with the exception of February to July 2008), documented human-caused wolf mortality averaged 13 percent of the minimum known NRM wolf population annually (USFWS et al. 2000–2009, entire) with lethal control of depredating wolves (which includes legal take by private individuals) and illegal take (discussed previously) being the primary mortality factors. As expected, human-caused mortality increased after 2008 as NRM States, dependent on the Federal status of wolves, began to manage wolf populations. As a result, human-caused mortality increased to an average of 27 percent of the minimum known NRM wolf population annually between 2009 and 2015 (USFWS et al. 2010–2016, entire). Since 2009, regulated public harvest and lethal control of depredating wolves have been the two primary mortality factors removing an average of 17 percent and 9 percent of the minimum known NRM wolf population annually, respectively (USFWS et al. 2010–2016, entire). As part of post-delisting monitoring in the NRM, the Service conducted annual assessments of the NRM wolf population and noted that it remained well above Federal recovery levels with no identifiable threats that imperiled its recovered status under State management in 2009 (Bangs 2010, entire) and 2011 to 2015 (Jimenez 2012, 2013a, 2014, 2015, 2016, entire).

In addition to the annual post-delisting assessments, previous rules (74 FR 15123, April 2, 2009, and 77 FR 55530, September 10, 2012) have adequately described wolf population-level responses to various mortality factors in the NRM up through 2008. Regulated harvest and lethal control of depredating wolves account for the majority of the known wolf mortalities in the NRM since 2009 (see above); therefore, the following discussion focuses on these two types of mortality. The management of wolf populations through regulated harvest had never been attempted in the lower 48 United States until 2009 when the NRM States of Idaho and Montana conducted the first regulated wolf hunts. To highlight the adaptive style of management that Idaho, Montana, and Wyoming use to maintain a recovered wolf population in the NRM DPS, even though State

objectives include reducing wolf population growth rates, we have included a significant amount of detail regarding the regulatory framework the States have used to regulate wolf harvest. This information also demonstrates wolf population-level responses and that harvest levels generally do not increase under gradually less restrictive regulations in some States. Lethal take of depredating wolves by private individuals accounts for a relatively small percentage of total wolves removed in the NRM annually for conflict-related issues. Thus, in addition to agency control of depredating wolves, the total number of wolves lethally removed for depredating livestock includes wolves killed legally by private individuals in depredation situations unless specifically noted. Although most of the wolves in Oregon and Washington inhabit the NRM DPS portion of each State and account for the majority of the wolf mortalities in any given year, mortality rates presented below for these States are based on statewide totals unless specified otherwise. For further information related to the regulatory framework within each State in the NRM, see the Management in the NRM DPS and the Post-Delisting Management in the West Coast States sections of this rule as well as previous rules (74 FR 15123, April 2, 2009; 77 FR 55530, September 10, 2012).

Regulated Harvest in Idaho—The Idaho Department of Fish and Game (IDFG) has expressed its commitment to maintaining a viable, self-sustaining wolf population above minimum Federal recovery levels, while minimizing conflicts (Idaho Legislative Wolf Oversight Committee [ILWOC] 2002, p. 4). Additional goals of wolf management in Idaho are to ensure connectivity with wolf populations in neighboring States and Provinces and to manage wolves as part of the native resident wildlife resource, similar to management of other large carnivores in the State (ILWOC 2002, p. 18). The State has indicated that it will only allow wolf harvest as long as wolves remain federally delisted and as long as 15 or more packs are documented in the State. Wolves were removed from Federal protections in Idaho in 2009 (74 FR 15123, April 2, 2009), and IDFG determined that the first regulated, public hunt of wolves could begin later that fall.

IDFG provided recommendations for the 2009–2010 wolf hunting season to the IDFG Commission, which approved the recommendations. The total statewide harvest limit was 220 wolves distributed across 12 wolf management zones (WMZ). Hunting was the only legal form of take, and the bag limit was one wolf per hunter. Successful hunters were required to report the harvest of a wolf within 24 hours of take and present the skull and hide to an IDFG regional office or conservation officer for inspection and to have the hide tagged with an official State export tag within 5 days of harvest. Seasons began in two WMZs on September 1, another two WMZs opened on September 15, and the remaining eight WMZs opened October 1, 2009; all WMZs remained open until March 31, 2010, or until harvest limits were reached in that specific WMZ. By the end of 2009, 5 of the 12 WMZs were closed after harvest limits were met. An additional two WMZs met harvest limits prior to the season closing on March 31, 2010. A total of 181 wolves were harvested during the 2009–2010 season, and a minimum count of 870 wolves were documented at the end of calendar year 2009 (see table 3).

Prior to the start of the 2010–2011 wolf hunting season, a court order placed wolves back under Federal protections (75 FR 65574, October, 26, 2010), so no wolf hunting occurred during that hunting season.

Wolves were again delisted in Idaho in May 2011 (76 FR 25590, May 5, 2011). Similar to the 2009–2010 hunting season, a primary objective with harvest was to reverse wolf population growth at the State level while limiting harvest in some WMZs to conserve wolves and maintain adequate connectivity to wolf populations in Montana and Wyoming. As a result, some WMZ modifications occurred, as well as significant changes to season rules and regulations that were approved by the IDFG Commission. Harvest regulations in WMZs that bordered Montana and Wyoming were conservative compared to other WMZs in Idaho to limit potential harvest effects during peak periods of wolf dispersal. Harvest limits were established in five WMZs where IDFG expected high hunter success based on results and experience gained during the 2009–2010 season and where it was important to maintain connectivity between wolf populations in adjacent States. In the eight remaining WMZs, where IDFG expected lower hunter success based on results and experience gained during the previous season or where high levels of wolf-ungulate or wolf-livestock conflicts occur, no harvest limits were set. Seasons in all WMZs opened on August 30, 2011, and closed when the harvest limit was reached in any of the 5 WMZs that had harvest limits or (1) on March 31 of the following year for 9 of 13 WMZs; (2) on December 31, 2011, in the Beaverhead and Island Park WMZs; and (3) on June 30, 2012, in the Lolo and Selway WMZs. Hunting bag limits were increased to two wolves per calendar year. Trapping was also approved by the IDFG Commission as a legal form of take and was permitted in five WMZs. Trappers were required to attend a wolf trapper education class prior to purchasing wolf trapping tags. Trapping seasons began November 15, 2011, and were open through March 31, 2012. Certified trappers could purchase up to three wolf trapping tags per season, and trappers were permitted to use hunting tags on trapped wolves. Regardless of method of take, the mandatory reporting period for successful hunters and trappers was extended to 72 hours, and they still had to present the hide and skull to an IDFG conservation officer or regional office within 10 days for inspection and tagging. As part of post-delisting monitoring for Idaho, the Service evaluated regulatory changes to Idaho's wolf harvest seasons to assess the level of impact to wolves in the State and determined that, although harvest would likely increase over the first year of regulated take, these changes did not pose a significant threat to wolves in Idaho and would ensure wolf numbers remained well above minimum recovery levels (Cooley 2011, entire). From this point forward in this section of the rule, Idaho wolf harvest totals are presented based on the calendar year rather than the hunting/trapping season. In calendar year 2011, 200 wolves were legally harvested in Idaho (173 by hunting and 27 by trapping), and 768 wolves were documented in the State as of December 31, 2011 (see table 3).

Regulatory changes for the 2012–2013 wolf season were designed to increase take, especially in those areas that had lower hunter/trapper success and where high levels of wolf-ungulate or wolf-livestock conflicts occur. Trapping was permitted in one additional WMZ in the 2012–2013 season for a total of six WMZs where trapping was permitted. Bag limits were increased in 6 of 13 WMZs from 2 to 5 hunting tags per hunter per calendar year and from 3 to 5 trapping tags per trapper per season. The remaining WMZs continue to permit two hunting tags per individual (trapping is not permitted in these WMZs). Season structure was similar to the previous season except that the season was extended in the Beaverhead and Island Park WMZs to January 31 (from December 31) and the start of the hunting season on private land in the Panhandle WMZ was changed to begin

on July 1 rather than August 31. Although the Service expected harvest to increase over previous years, we determined it was unlikely that these regulatory changes would result in Idaho's wolf population nearing minimum recovery levels (Cooley 2012, entire). During calendar year 2012, 329 wolves were legally harvested in Idaho, and 722 wolves were documented in the State at the end of 2012 (see table 3).

Relatively minor changes were approved for the 2013–2014 wolf season and included harvest on private land year-round in one WMZ and the extension of the season end date to June 30 in 2 WMZs (a total of four WMZs now close on this date). Trapping seasons were permitted in 3 additional WMZs, resulting in 9 out of 13 WMZs that allowed trapping. The Service determined no official review was necessary for these regulatory changes because they would not likely result in a significant increase in harvest (Cooley 2013, entire). A total of 356 wolves were harvested during the 2013 calendar year, a modest increase over 2012 totals, with 659 wolves documented in the State at the end of 2013 (see table 3).

Idaho regulations were changed for the 2014–2015 wolf season to increase harvest. The Service determined that the changes would not threaten Idaho's wolf population (Cooley 2014, entire). Bag limits were increased statewide to five tags per hunter per calendar year or five tags per trapper per season; trappers were permitted to use hunting tags for trapped wolves. Five WMZs had year-round hunting seasons on private property only, and hunting seasons closed on June 30 for three WMZs and portions of two other WMZs. Trapping was permitted in 12 of 13 WMZs (with specific regulations for most WMZs), and trap start dates were moved up to October 10 (from November 15) for 3 WMZs. Harvest limits remained for 5 of 13 WMZs. A total of 256 wolves were legally harvested in Idaho during the 2014 calendar year, with 770 wolves documented in the State at the end of 2014 (see table 3).

Beginning with the 2015–2106 season, regulations were set for 2-year periods, although the IDFG Commission could make emergency regulatory changes anytime during that period if necessary. Very few, minor changes occurred during this biennium compared to the previous season. As a result, harvest was very similar to 2014 with 256 wolves harvested during calendar year 2015 and 267 wolves harvested during 2016. A minimum count of 786 wolves was documented in Idaho at the end of 2015 (see table 3). IDFG transitioned away from providing minimum counts beginning in 2016 and experimented with other metrics to evaluate population trends (see *Wolf Population and Human-Caused Mortality In Idaho Summary* section). One of these techniques estimated that a minimum of 81 packs was extant in Idaho during 2016 (IDFG 2017, p. 6).

The 2017–2018 and 2018–2019 wolf seasons saw additional changes, some of which were designed to reduce the population by increasing the number of wolves that could be harvested in Idaho. Some changes that occurred were: Extending the mandatory reporting period for successful hunters and trappers from 3 days to 10 days; removal of wolf harvest limits statewide; and no longer using WMZs to set regulations for specific regions of the State (instead, hunt units are grouped based on season start and end dates as well as any special regulations that pertain to specific units). Idaho contains a total of 99 hunt units, and 25 of these had year-round hunting seasons on private land only; most other hunting seasons began on August 1 or 30 and ended on March 31, April 30, or June 30. Trapping seasons began either October 10 or November 15 and closed on March 15 or 31. Trapping was not permitted in 38 of the 99 hunt units in Idaho. Harvest increased slightly over previous years, with 281 wolves harvested in 2017 and 329 wolves during calendar year 2018. No minimum counts or wolf abundance estimates were collected during 2017 and 2018.

The 2019–2020 and 2020–2021 wolf seasons saw minor adjustments to hunting and trapping regulations. Hunting and trapping seasons were similar to the previous 2 seasons; however, trapping was permitted in all hunt units except 2 (down from 38 hunt units previously). Bag limits also changed from the previous two seasons and again within the 2019–2020 hunting season. Current bag limits are a harvest limit of 15 wolves per hunter per calendar year and 15 wolves per trapper per trapping season; trappers continue to be permitted to use hunting tags for trapped wolves. Wolf harvest totals for calendar year 2019 were not available as of this writing; however, using an array of remote cameras and a modeling framework, IDFG estimated that approximately 1,000 wolves existed in the State at the end of 2019 (IDFG, *pers. comm.,* 2020, USFWS 2020, p. 16), which is well above the recovery target of 10 breeding pairs and 100 wolves.

On average, harvest has removed approximately 21 percent of Idaho's known wolf population annually between 2009 and 2015. Although annual variations in minimum counts were documented, and Ausband et al. (2015, pp. 418–420) noted a decline in pup survival that may have affected recruitment after wolf hunts began in Idaho, the implementation of regulated harvest has stabilized wolf population growth in the State, at least between the years of 2009 to 2015 (mean population growth rate: 0 percent; range: −11 percent to 17 percent). While minimum counts were not conducted by IDFG after 2015, metrics that estimated the number of packs in the State in 2016 (IDFG 2017, p. 6), similarities in total harvest in 2016 and 2017, along with a slight increase in 2018, combined with regulations providing for increased hunter/trapper opportunities, indicates that the wolf population in Idaho has not deviated significantly from the 786 wolves that were documented in the State at the end of 2015 (see table 3). Although not directly comparable to a minimum count, IDFG estimated that approximately 1,000 wolves existed in Idaho at the end of 2019 (IDFG, *pers. comm.,* 2020).

In an analysis of Idaho wolf harvest statistics through 2014, hunting removed more male than female wolves, pups were trapped in equal proportions to other age classes, hunting removed a greater proportion of wolves than trapping, and there was little change in hunter/trapper effort over time (Ausband 2016, entire). Another analysis noted that most wolves in Idaho were harvested in October, incidental to deer and elk hunting seasons, and that more harvest opportunities through increased bag limits and extended season lengths did not necessarily result in increased harvest between 2012 and 2016 because most hunters harvested a single wolf (IDFG 2017, entire).

The levels of harvest mortality experienced by Idaho's wolf population through 2016 appears to be additive to other forms of mortality, which indicates that it can be an effective tool to manipulate wolf abundance in the state (Horne et al. 2019a, p. 40). However, after initial high rates of harvest post-delisting, wolf harvest rates moderated between 2012 and 2016, resulting in average pack sizes similar to those observed pre-delisting (Horne et al. 2019a, pp. 38–41). Similarly, both recruitment and dispersal rates did not change appreciably from pre-harvest levels (Horne et al. 2019a, pp. 38–41). Harvest regulations were changed in Idaho during the years of this study and beyond in an attempt to increase harvest. However, increased hunter opportunity has not resulted in significant and continuous increases in wolf harvest. In fact, following an initial

period of high harvest rates that had some effect on wolf demographics (see above for discussion), wolf harvest has subsequently had minimal overall effect on the dynamics of wolf populations in Idaho through 2016 (Horne et al. 2019a, pp. 37–41).

Depredation Control in Idaho—Wolf-livestock depredation management in Idaho is guided by Idaho Statute (I.S.) 36–1107 and the provisions in the Idaho Wolf Conservation and Management Plan (ILWOC 2002). I.S. 36–1107 authorizes the IDFG Director or his designated authorities to control, trap, and/or remove animals doing damage to or destroying any property. Section (c) of the statute applies specifically to wolves and encourages the use of nonlethal methods to prevent or minimize conflict risk. It also permits owners of livestock or domestic animals, their employees, agents, or agency personnel to lethally remove wolves molesting or attacking livestock without the need for a permit from IDFG. A permit is needed from IDFG to lethally remove wolves not attacking or molesting livestock or domestic animals or pursuant to IDFG wolf harvest rules. Any wolf taken under this authority must be reported to IDFG within 10 days and becomes the property of the state.

Under the IDFG Policy for Avian and Mammalian Predator Management (IDFG 2000), where there is evidence that predation is a significant factor inhibiting prey populations from achieving management objectives, management actions to mitigate the effects of predators may be developed in a predation management plan. Initial management options may include habitat improvements, changes to regulations governing take of the affected species, or regulatory changes that increase hunter/trapper opportunity for predators. If these methods are implemented and do not achieve the desired management objective, predator management may be used to reduce predator populations where predator effects are most significant. To date, predator management plans have been developed for five elk management zones in Idaho with wolves being one of, if not the primary, targeted predator (IDFG 2011, IDFG 2014a, IDFG 2014b, IDFG 2014c).

Between 2008 and 2011, the Federal status of wolves in Idaho changed on several occasions. While wolves in Idaho were under Federal management authority, they were managed under a nonessential experimental population regulation in the central Idaho (south of I–90) and the GYA recovery areas (73 FR 4720, January 28, 2008). In addition to agency-directed lethal control, this designation allowed for opportunistic harassment of wolves by livestock producers and allowed lethal take of wolves that were observed attacking livestock or dogs on private or lawfully occupied public lands. Wolves that occupied the northwest Montana recovery area in the NRM, which includes a portion of Idaho north of U.S. Interstate 90, were classified as endangered and were afforded full protections under the Act.

The total number of wolves removed in lethal control actions includes take from agency actions to mitigate conflicts, take by private citizens under a permit or when wolves were killed in the act of attacking or molesting livestock, and wolves removed under the IDFG Policy for Avian and Mammalian Predator Management (2000) when wolves were under State management authority unless otherwise specified. Minimum wolf counts are available for Idaho only through 2015, while records of wolves lethally removed in conflicts are available through 2016 (see table 3). Although the total number of wolves removed in conflict situations was higher in Idaho under State authority (2009 and 2011–2015; n = 465) when compared to a similar time period under Federal management (2004–2008 and 2010; n = 325), the annual average percent of wolves lethally removed did not change and remained at 7 percent of the minimum known population. Between 2011 and 2016, 107 wolves were removed under predation management plans to benefit ungulate populations. Wolf-caused sheep depredations dominate Idaho wolf-livestock conflicts, and although there has been annual variability, a general downward trend in the number of wolf-sheep conflicts has occurred since 2009 (IDFG 2016, pp. 12–14). Cattle depredations have also generally declined since 2009.

Wolf Population and Human-caused Mortality in Idaho Summary—Between 1999 and 2008, the rate of human-caused mortality in Idaho was 9 percent, which allowed the wolf population to increase at a rate of approximately 22 percent annually. Since 2009, when wolves were federally delisted and primarily under State management authority (the exception being August 2010 to May 2011), human-caused mortality increased to 29 percent annually, which was one of a multitude of factors that likely contributed to the stabilization of the wolf population in Idaho between 2009 and 2015. Although some variation in annual wolf abundance was documented, minimum counts of wolves in Idaho ranged from 659 to 786 wolves between 2010 and 2015 (see table 3).

Beginning in 2016, after Idaho's post-delisting monitoring period ended, IDFG transitioned away from providing minimum counts of known wolves and towards the use of multiple other methods to track population trends. These include genetic sampling of wolves for genetic analysis at den and rendezvous sites (Stansbury et el. 2014, entire), mandatory checks of all harvested wolves, incidental observations by the public and agency personnel, monitoring the location and number of lethal control actions authorized by IDFG, and limited wolf tracking via radio transmitters (IDFG 2017, pp. 5–6). More recently, a novel application of genetic data used biological samples collected from harvested wolves to estimate a minimum number of reproductive packs that existed in the State in a given year (Clendenin et al. 2020, entire). A minimum of 52 and 63 reproductive packs were subjected to harvest in Idaho in 2014 and 2015, respectively, which was similar to what was documented by IDFG during those years (Clendenin et al. 2020, pp. 6–10). Additional analyses conducted by IDFG using remote cameras deployed across the State during summer indicated that 81 packs existed in the State in 2016 (IDFG 2017, p. 6). Comparing these results to those of Clendenin et al. (2020, entire) indicates that not all Idaho packs are subjected to harvest in all years.

More recently, using an array of remote cameras and a modeling framework, IDFG estimated that approximately 1,000 wolves existed in the State at the end of 2019 ((IDFG, *pers. comm.* 2020). Although not comparable to previous wolf surveys that used minimum counts, continued refinement of the methodology and estimation of the abundance of wolves in the State using the modeling framework will allow for annual evaluations of abundance and trends over time. Based on these more recent methods that evaluate population trends (genetic analysis of harvested wolves) and provide a population estimate (modeling), the wolf population in Idaho appears to be resilient to the increased level of human-caused mortality in the State, indicating that Idaho wolves remain well above recovery levels of 10 breeding pairs and 100 wolves and continue to be widely distributed across the state.

Regulated Harvest in Montana—Regulated public harvest of wolves in Montana was first endorsed by the Governor's Wolf Advisory Council in 2000 and included in Montana's Wolf

Conservation and Management Plan. Wolf hunting in Montana can be implemented only when wolves are federally delisted and under State management authority and when greater than 15 breeding pairs were documented in the State the previous year. Montana Fish, Wildlife, and Parks (MFWP) developed wolf harvest strategies that maintain a recovered wolf population, maintain connectivity with other subpopulations of wolves in Idaho, Wyoming and Canada, minimize wolf-livestock conflicts, reduce wolf impacts on low or declining ungulate populations and ungulate hunting opportunities, and effectively communicate to all parties the relevance and credibility of the harvest while acknowledging the diversity of opinions and values among interested parties. The Montana public has the opportunity for input regarding wolf harvest recommendations throughout a public season-setting process prior to adoption of season regulations by the MFWP Commission.

To prepare for the potential that wolves would be delisted and legal public harvest could be implemented, MFWP developed wolf harvest recommendations that would achieve desired management objectives. The recommendations were approved, with some modifications, by the MFWP Commission in early 2008. Three wolf management units (WMU), and one subunit, were established each with a harvest limit or quota. Wolf hunting seasons opened September 15 and remained open until December 31 or until harvest limits were reached, whichever occurred first. Hunters could harvest one wolf per calendar year. Successful hunters were required to report their kill within 12 hours of harvest and present the skull and hide for inspection by MFWP within 10 days. MFWP Commission had authority to initiate emergency season closures if conditions warranted.

Hunting quotas were developed through an evaluation of population parameters including wolf population status and trends, pack distribution, pup production, and all mortality factors. Modeling exercises assessed risk and harvest effects on Montana's wolf population, and all assumptions were made conservatively. Resulting harvest limits were considered biologically conservative (Sime et al. 2010, p. 18) and included a statewide total of 75 wolves distributed across the three WMUs.

Due to litigation resulting from Federal delisting efforts in 2008 (see 73 FR 10514, February 27, 2008), no public harvest occurred in 2008. Wolves were again removed from Federal protections in Montana in 2009 (74 FR 15123, April 2, 2009), and MFWP conducted the first regulated, public hunt of wolves that fall using the same regulations that were developed for the 2008 season described above. A total of 72 wolves were harvested, and seasons closed statewide on November 16. Post-hunt evaluations indicated no biological threats to the wolf population in Montana resulted from the harvest, and, as expected, most hunters harvested wolves opportunistically while deer and/or elk hunting (MFWP 2010, entire). Year-end counts by MFWP documented a minimum of 524 wolves in the State, while patch occupancy modeling estimated that 847 wolves existed across Montana at the end of 2009 (see table 3; also see USFWS 2020, p. 16 and the final paragraph of this section for an explanation of why minimum wolf counts and modeled estimates differed).

Prior to the 2010 season, wildlife managers in Montana refined the WMU structure in the State to better distribute harvest resulting in the creation of 14 WMUs, primarily distributed across the western half of Montana where wolves exist. With input provided from regional personnel, a general consensus resulted in a desired objective to reduce wolf numbers within biological limits without jeopardizing Federal recovery targets of at least 10 breeding pairs and 100 wolves. Using similar modeling exercises as previous years and an objective of reversing wolf population growth, a total quota of 186 wolves distributed across the 14 WMUs was approved by the MFWP Commission. Prior to the start of the 2010 wolf hunting season, a court order placed wolves back under Federal protections (75 FR 65574, October 26, 2010), so no wolf hunting season took place.

Wolves were again delisted in Montana in May 2011 (76 FR 25590, May 5, 2011). Similar to previous years, a primary objective with harvest was to reverse wolf population growth. As a result, archery-only and early back-country rifle seasons were proposed, and a quota increase to 220 wolves distributed across all WMUs was recommended by MFWP and approved by the MFWP Commission. Wolf harvest was not progressing as expected during the early parts of the hunting seasons (121 wolves harvested and 2 of 14 WMU quotas met by December 31, 2011), so MFWP proposed a season extension through January 31, 2012, or until WMU quotas were met. After a public comment period, the MFWP Commission approved and adopted a season extension through February 15, 2012. A total of 166 wolves were harvested during the 2011–2012 season, equaling 75% of the total quota, with 3 of 14 WMUs closing due to quotas being met (MFWP 2012, entire). Year-end counts by MFWP documented a minimum of 653 wolves in the State, while patch occupancy modeling estimated that 971 wolves existed across Montana at the end of 2011 (see table 3).

The 2012–2013 wolf hunting season saw significant changes to season structure and regulations that were designed to increase harvest and reduce wolf numbers in the State to a management goal of 425 wolves, more than twice the Federal recovery goal. First, some hunt areas were reorganized to better direct or limit harvest in certain locations increasing the total number of WMUs to 17. Other changes included a statewide general season rather than a statewide quota with quotas remaining in WMU 110 and 316 only, which border Glacier and Yellowstone National Parks, respectively; a hunting season closing date of February 28; a trapping season that would be open from December 15 through February 28; an increase in the overall bag limit to three wolves per hunter/trapper per season; consistent with State statute, the use of electronic calls to take wolves; and a change in the mandatory reporting period from 12 to 24 hours after harvest or upon returning to the trailhead for backcountry hunters/trappers. All wolf trappers were required to attend a wolf trapping educational course to become certified prior to purchasing a wolf trapping license and were required to have a minimum pan tension of 8 pounds in MFWP Regions 1 and 2 to minimize nontarget captures. In February 2013, the Governor signed House Bill 73, which included language that authorized the use of electronic calls and the sale of multiple wolf hunting licenses. As a result, these MFWP Commission provisions that were approved earlier became effective immediately upon the Governor's signing. As part of post-delisting monitoring for Montana, the Service evaluated these regulatory changes to Montana's wolf hunting and trapping seasons to assess the level of impact to wolves in the State and determined that, although harvest would likely increase over previous years, these changes did not pose a significant threat to wolves in Montana and would ensure wolf numbers remained well above minimum recovery levels (Sartorius 2012, entire; Jimenez 2013b, entire). A total of 225 wolves were harvested during the 2012–2013 wolf season, with the majority of hunters and trappers harvesting a single

wolf (MFWP 2013, entire). Year-end counts by MFWP documented a minimum of 625 wolves in the State, while patch occupancy modeling estimated that 915 wolves existed across Montana at the end of 2012 (see table 3).

The 2013–2014 wolf hunting and trapping season saw some minor changes to seasons that included the general (hunting) season being extended to March 15, an increased bag limit of five wolves in any combination of general or trapping per hunter/trapper per season, and the creation of WMU 313 (with a separate quota) north of Yellowstone National Park. Trappers were also required to have a minimum pan tension of 10 pounds in MFWP Regions 1–5 to reduce incidental capture of nontarget species. A total of 230 wolves were harvested during the 2013–2014 season, with hunters taking 143 wolves and trappers taking another 87. Even with the increased bag limits, the majority of successful hunters and trappers took one wolf (MFWP 2014, entire). Year-end counts by MFWP documented a minimum of 627 wolves in the State, while patch occupancy modeling estimated that 1,088 wolves existed across Montana at the end of 2013 (see table 3).

Other than some minor quota changes to those WMUs that border Glacier and Yellowstone National Parks, the only significant change that has occurred since the 2013–2014 wolf hunting and trapping season was the decision by the MFWP Commission prior to the 2017–2018 seasons to visit wolf season structure every other year rather than every year to allow for discussion of ungulate and wolf seasons at the same Commission meeting. Wolf harvest in Montana remained similar to the previous two seasons when 206 and 210 wolves were harvested during the 2014–2015 and 2015–2016 seasons, respectively (MFWP 2015, entire; MFWP 2016, entire). A slight upward trend has been observed since with 247 wolves being harvested in the 2016–2017 season, 255 in 2017–2018, and 295 in 2018–2019 (MFWP 2017, entire; MFWP 2018, pp. 13–14; Inman et al. 2019, pp. 9–10). Meanwhile, the minimum known number of wolves in Montana has ranged between 477 and 633 animals since 2014, while patch occupancy modeling estimates have ranged between 814 and 981 wolves during the same time period (see table 3 for further information). The overall general trend in method of take was similar to previous years with hunters taking approximately two-thirds and trappers taking one-third of all harvested wolves in Montana.

The Confederated Salish and Kootenai Tribes (CSKT) of the Flathead Reservation regulate wolf harvest on their Tribal lands. The CSKT defined three wolf hunting and trapping zones on their reservation where, according to the 2018–2019 regulations, seasons begin on September 1 and end on either March 31 or April 30 of the following year, or until harvest limits are reached in each zone, whichever occurs first. Bag and harvest limits are 1 wolf per hunter/trapper, with a maximum harvest of 5 wolves total in the Mission Mountain Zone and 2 wolves per hunter/trapper with a maximum harvest of 10 wolves in the Northwest and South Zones. Trappers are required to complete a Wolf Trapper Training Class prior to obtaining a Tribal trapping permit. Successful hunters/trappers must present the hide and skull for inspection and sample collection within 7 days of take. Wolves harvested on the Flathead Reservation are included in Montana totals described above and in table 3.

The Blackfeet Nation provides gray wolf hunting opportunities for its Tribal members and descendants. The Blackfeet Nation is divided into 4 hunting zones and wolf hunting is allowed in Zones 2 and 3 only; no wolf hunting is permitted in Zones 1 or 4, and wolf trapping is not authorized in any hunting zone. Hunters may purchase up to three gray wolf hunting licenses each season. Seasons start on the third Saturday in October and close on March 31 of the following year. Successful hunters must report harvest and have animals inspected by a game warden within 24 hours of take. All harvest totals from the Blackfeet Nation are included in the Montana totals described above and in table 3.

Regulated public harvest of wolves in Montana has removed an average of 22 percent (range: 10–31 percent) of Montana's minimum known wolf population during those years that harvest occurred and minimum counts were documented (2009, 2011–2017 in table 3). The minimum known number of wolves in Montana also gradually declined as regulations became less restrictive with the objective of reversing wolf population growth in Montana. Although harvest may have been a contributing factor, it is also possible that reduced wolf monitoring in the State resulted in lower minimum counts. When wolf harvest was evaluated using patch occupancy modeling estimates, which were not influenced by changes to MFWP survey effort over time, harvest accounted for the removal of between 7 and 22 percent of the population annually. Despite less restrictive harvest regulations, total wolf harvest has remained relatively consistent since 2013 (range: 205–259 wolves), and the patch occupancy modeled estimated wolf population appears to have stabilized around 800 to 900 wolves since 2014.

Depredation Control in Montana—The 2001 Montana Legislature passed Senate Bill 163 (SB163), which amended several statutes in Montana Title 87 pertaining to fish and wildlife species and oversight and Title 81 related to the Montana Department of Livestock (MDOL) and their responsibilities related to predator control (MFWP 2002, pp. 6–9). SB163 called for the removal of wolves from the Montana list of endangered species concurrent with Federal delisting. After removal as State endangered, wolves were classified as a species in need of management, which allowed MFWP and the MFWP Commission to establish regulations to guide management of the species. SB163 amended Montana Statute 87–3–130, which relieved a person from liability for the taking of a wolf if it was attacking, killing, or threatening to kill a person, livestock, or a domestic dog. SB163 also removed wolves from the list of species classified as ''predatory in nature,'' which are systematically controlled by MDOL. As a result, MDOL would work cooperatively with MFWP to control wolves in a manner consistent with a wolf management plan approved by both agencies.

The primary goal of wolf management in Montana is to maintain a viable wolf population and address wolf-livestock conflicts (MFWP 2002, p. 50). MFWP encourages the use of preventative and nonlethal methods and actively participates and cooperates in many preventive conflict reduction programs (Inman et al. 2019, p. 14; Wilson et al. 2017, p. 247). Current rules and regulations to address wolf-livestock conflicts provide more opportunity for livestock producers and/or private landowners to address wolf-related conflicts. Nonlethal harassment is allowed at all times; however, if nonlethal methods do not discourage wolves from harassing livestock, landowners may request a special kill permit from MFWP that is valid on lawfully occupied public and private lands. SB163 also provides authorization for livestock producers to kill a wolf without a permit if it is threatening, attacking, or killing livestock on either public or private lands. If private citizens kill a wolf with or without a permit, they are required to report the incident to MFWP as soon as possible, or within 72 hours, and

surrender the carcass to MFWP authorities. If a livestock depredation is documented, nonlethal or lethal control may be implemented, as appropriate, by providing recommendations to the livestock producer or through agency actions.

Between 2008 and 2011, the Federal status of wolves in Montana changed on several occasions. While wolves were under Federal management authority, wolves throughout most of Montana were managed under a revised section 10(j) rule for the central Idaho and GYA nonessential experimental wolf population in the NRM (73 FR 4720, January 28, 2008). In addition to agency-directed lethal control, this allowed for opportunistic harassment of wolves by livestock producers and allowed take of wolves that were observed attacking livestock or dogs on private or lawfully occupied public lands. Wolves that occupied the northwest Montana recovery area in the NRM were classified as endangered and were afforded full protections under the Act.

The Blackfeet Nation and CSKT wolf management plans each provide similar management responses based on potential wolf conflict scenarios that may occur on their respective reservations (see table 1 in Blackfeet Tribal Business Council [BTBC] 2008, p. 7; see table 1 in CSKT 2015, p. 11). In most instances, initial management responses will emphasize preventative and nonlethal methods to resolve conflicts (BTBC 2008, pp. 6–7; CSKT 2015, pp. 10–11). If these methods are unsuccessful at resolving the conflict, more aggressive techniques, including agency-directed lethal control, may be implemented until the conflict is resolved. Wolves removed through lethal control actions to resolve livestock conflicts on these reservations have been included in the Montana totals referenced below.

In Montana, most livestock depredations occur on private land (Inman et al. 2019, p. 11; DeCesare et al. 2018, pp. 5–11), and, although a slight increase has occurred in recent years, a general overall downward trend in the number of verified wolf depredations has occurred since 2009 (Inman et al. 2019, p. 1). This general downward trend in the number of depredations has tracked closely with the time period wolves have been under State management authority in Montana. A concurrent decline in the percentage of Montana wolves lethally removed in depredation control actions (includes agency and private citizen removals) has also occurred in Montana. Between the years of 2002 to 2008 plus 2010, corresponding to the years wolves were primarily under Federal authority, 512 wolves were removed to address conflicts with livestock. As a percentage of the minimum known population during that time period, an average of 15 percent of Montana's wolf population was removed to address wolf-livestock conflicts annually. When wolves were primarily under State management authority, 597 wolves were removed between 2009 and 2017 (excluding 2010; MFWP switched to reporting wolf population estimates based on patch occupancy modeling estimators only beginning in 2018 so no minimum count was available for 2018). Although a greater number of wolves were lethally removed under State authority, the average percentage of wolves removed annually declined to 9 percent of the minimum known wolf population during this time period. Since 2013, the percent of Montana's wolf population removed for depredation control has not exceeded 8 percent, and was as low as 5 percent of the minimum known population in 2015. Using population estimates based on patch occupancy modeling, the percentage of the wolf population removed annually to resolve wolf-livestock conflicts has not exceeded 5 percent since 2013 and has been as low as 3 percent in 2015.

Wolf Population and Human-caused Mortality in Montana Summary—Since 2009, despite increases in both human-caused and total mortality, the wolf population in Montana has continued to increase on average 2 percent annually based on both minimum counts and patch occupancy modeling (POM) estimates. Between 2009 and 2017, the rate of human-caused mortality in Montana was 32 percent and ranged between 23 and 41 percent of the minimum known population. When other causes of mortality were included, total mortality generally equaled 1 to 2 percentage points higher than human-caused mortality. Wolf abundance estimates using POM was higher than minimum counts of known individuals, and as a result, estimated mortality rates were lower for the POM estimated wolf population in Montana (table 3). Based on POM estimates, the rate of human-caused mortality ranged between 17 and 29 percent and averaged 23 percent since 2009. When other forms of mortality were included, total mortality in Montana averaged 24 percent since 2009 based on POM population estimates. The wolf population in Montana appears to be resilient to these levels of human-caused and total mortality and, based on POM, has stabilized between 800–900 animals in 4 of the past 5 years (the outlier being an estimate of 981 wolves in 2015).

Regulated Harvest in Wyoming—Wyoming Statute 23–1–304 provides authority for the Wyoming Game and Fish Commission (WGFC) to promulgate rules and regulations related to the management of wolves in Wyoming where they are classified as trophy game animals. Per WGFC Chapter 21 regulations that govern the management of wolves in Wyoming, wolves are classified as trophy game animals in the northwest part of the State, where the majority of the wolves reside, and predators in the remainder of Wyoming. Wolf harvest is regulated by WGFC Chapter 47 regulations in the wolf trophy game management area (WTGMA), whereas wolves may be taken by any legal means year-round and without limit in the predator area as provided by Wyoming Statute 23–2–303(d), 23–3–103(a), 23–3–112, 23–3–304(b), 23–3–305, and 23–3–307. Wolf hunting regulations within the WTGMA are evaluated and revised annually based on current population objectives and past years' demographic and mortality information. An internal review and an extensive public input process occur prior to finalization of WGFC Chapter 47 regulations.

Wolves were federally delisted in the NRM on March 28, 2008 (73 FR 10514, February 27, 2008). In anticipation of the first regulated wolf hunt in Wyoming history, the Wyoming Game and Fish Department (WGFD) drafted Chapter 47 regulations to guide the 2008 wolf hunting season. A total mortality limit of 25 wolves was distributed across 4 wolf hunt areas in the WTGMA, and seasons began October 1 and ended November 15 in 1 hunt area and November 30 in the remaining 3 hunt areas, or when the mortality limit was reached in that specific hunt area, whichever occurred first. Firearms and archery were the only legal forms of take, and the bag limit was one wolf per hunter per calendar year. Successful hunters were required to report their take within 24 hours of harvest and were also required to present the hide and skull to a WGFD employee within 5 days of harvest for inspection and sample collection. On July 18, 2008, the U.S. Federal Court in Missoula, Montana, issued a preliminary injunction that immediately reinstated the protections of the Act for gray wolves in the NRM, pending the issuance of a court opinion. On October 14, 2008, the court vacated the final delisting rule and remanded it back to the Service. As a result, no regulated wolf hunting occurred in Wyoming during the 2008 season. However, when

wolves were federally delisted between March 28 and July 18, 11 wolves were taken in the predator area (Jimenez et al. 2009, p. 31).

Wolves remained under Federal protections and were managed by the Service in Wyoming until 2012 when they were removed from the List (77 FR 55530, September 10, 2012). In anticipation of potential delisting in 2012, Chapter 47 regulations for wolf hunting seasons were approved by the WGFC in April 2012. To better direct harvest to areas with a greater potential for wolf-livestock or wolf-ungulate conflict while concurrently providing for lower harvest in core areas where potential conflict was low, WGFD designated 11 wolf hunt areas within the WTGMA along with a 12th hunt area as a seasonal WTGMA where wolves are classified as a trophy game animal from October 15 through the last day of February, but are classified as predators outside of this time period. Mortality limits were developed for each hunt area with an objective to reduce the Wyoming wolf population, outside of national parks and the Wind River Indian Reservation (WRR), to approximately 172 wolves and 15 breeding pairs by the end of the calendar year. A total WTGMA mortality limit of 52 wolves was distributed across the 12 wolf hunt areas, and both legal and illegal harvest during open seasons counted towards mortality quotas. Wolf hunting seasons opened in most hunt areas on October 1 (October 15 in the seasonal WTGMA) and ended on December 31 or when the mortality quota was reached, whichever came first, in all hunt areas. Although take was not regulated in the predator area, successful hunters were required to report the take of any wolf or wolves in this area within 10 days of harvest. Bag limits, method of take, and reporting requirements were the same as under the 2008 wolf hunting regulations. Mortality limits were reached in 6 of 12 wolf hunt areas prior to season end dates, and a total of 42 wolves (41 legal, 1 illegal) was harvested in the WTGMA (WGFD et al. 2013, p. 19). Twenty-five additional wolves were harvested in the predator area (WGFD et al. 2013, p. 21). In the WTGMA, the age distribution of harvested wolves was nearly equal between adults, subadults, and pups, and approximately equal numbers of males and females were harvested (WGFD et al. 2013, p. 19). A minimum of 186 wolves were documented in Wyoming outside of YNP and the WRR, with an additional 91 wolves documented in YNP and WRR for a total of 277 wolves documented in the entirety of Wyoming at the end of 2012 (see table 3).

Chapter 47 regulations for the 2013 wolf hunting season were approved by the WGFC in July 2013. Total mortality limits within the WTGMA were designed to reduce the Wyoming wolf population, outside national parks and the WRR, to 160 wolves by the end of the calendar year (WGFD et al. 2014, p. 19). Total mortality limits were again distributed across the 12 wolf hunt areas and, compared to 2012 mortality limits, were reduced by half to a total of 26 wolves that could legally be taken within the WTGMA. One hunt area had a mortality limit of zero and, thus, never opened during the 2013 season. All other regulations remained unchanged from the 2012 season. A total of 24 wolves (23 legal, 1 illegal) were harvested during the wolf hunting season, with 8 of 11 open wolf hunt areas reaching mortality limits and closing before the season end dates (WGFD et al. 2014, p. 21). Again, little difference was observed between the gender and sex of harvested wolves, but young wolves outnumbered adults in the 2013 harvest. An additional 39 wolves were taken in the predator zone, and voluntary submission of tissue samples was high (WGFD et al. 2014, p. 24). A minimum of 199 wolves were documented in Wyoming outside of YNP and the WRR, with an additional 107 wolves documented in YNP and WRR, for a total of 306 wolves documented in the entirety of Wyoming at the end of 2013 (see table 3).

On September 23, 2014, the United States District Court for the District of Columbia vacated the 2012 final rule (77 FR 55530, September 10, 2012), which delisted wolves in Wyoming. Thus, wolves in Wyoming were immediately placed back under the Federal protections of the Act and were again managed by the Service. On April 25, 2017, the U.S. Court of Appeals for the District of Columbia Circuit reversed the vacatur of the 2012 final rule for wolves in Wyoming. In response, the Service published a direct final rule (82 FR 20284, May 1, 2017) again removing the protections of the Act for wolves in Wyoming and reverting management authority back to State, Tribal, and Federal authority dependent upon jurisdictional boundaries. As a result of the changes in legal status, no wolf hunting occurred in Wyoming between 2014 and 2016.

Regulations for the 2017 wolf hunting season were approved by the WGFC in July 2017. The primary objective was to reduce the wolf population to a total of 160 wolves outside of national parks and the WRR by the end of the calendar year. All other regulations being the same as previous years, a total wolf mortality limit of 44 wolves was distributed across 12 wolf hunt areas in the WTGMA. Mortality limits were met in 10 of 12 wolf hunt areas prior to wolf hunting end dates, and a total of 44 wolves were harvested (43 legal, 1 illegal; WGFD et al. 2018, p. 14). Mortality limits were exceeded in three hunt areas because two wolves were harvested on the same day when a quota of one wolf remained in those areas. More females than males were harvested, but sex and gender of harvested wolves were similar (WGFD et al. 2018, p. 14). An additional 33 wolves were harvested in the predator area where harvest of males and females was similar, but more adults were harvested compared to other age classes (WGFD et al. 2018, p. 16). A minimum of 238 wolves were documented in Wyoming outside of YNP and the WRR, with an additional 109 wolves documented in YNP and WRR, for a total of 347 wolves documented in the entirety of Wyoming at the end of 2017 (see table 3). As part of post-delisting monitoring, the Service evaluated the status of the wolf population in Wyoming and determined that wolf numbers remained well above recovery targets of at least 10 breeding pairs and 100 wolves statewide, and no significant threats were identified that would jeopardize the recovered status of wolves in Wyoming (Becker 2018a, entire).

The objective of the 2018 wolf hunting season was to reduce the wolf population in Wyoming, outside of national parks and the WRR, to 160 wolves by the end of the calendar year. A number of moderate changes to the 2018 wolf hunting regulations were approved by the WGFC in July 2018. To better direct hunter effort, two new hunt areas were delineated from existing hunt areas, which created a total of 14 hunt areas within the WTGMA. Mortality limits were combined for hunt areas 6 and 7 as well as hunt areas 8, 9, and 11 because packs that use these areas regularly cross back and forth across hunt area boundaries. Total wolf harvest limits within the WTGMA were increased to 58 wolves, and hunting seasons opened 1 month earlier on September 1 in all hunt areas, with the exception of the seasonal WTGMA. Hunters could purchase up to two wolf tags per calendar year, thus could harvest up to two wolves per calendar year. Reporting requirement changes included: (1) Successful hunters have 3 days to present the skull and hide of a

harvested wolf to a designated WGFD employee or location for registration and (2) if a wolf is harvested in a designated wilderness area, the pelt and skull will be presented to a designated WGFD employee or location within 3 days of returning from the wilderness or within 10 days of the harvest date, whichever occurs first.

The Service evaluated these regulatory changes and determined that they were unlikely to significantly increase harvest or jeopardize Wyoming's wolf population (Becker 2018b, entire). Four of 14 hunt areas met mortality limits prior to season ending dates with 2 hunt areas recording no harvest. A total of 43 wolves (39 legal, 4 illegal) were harvested during the hunting season with harvest distributed more equally across all 4 months when compared to previous seasons (WGFD et al. 2019, p. 17). Sex of harvested wolves was nearly equal, but a higher number of adults were taken in 2018 compared to younger age classes (WGFD et al. 2019, p. 17). Forty-two additional wolves were taken in the predator area of Wyoming with adults being the primary age class of wolves taken (WGFD et al. 2019, p. 18). A minimum of 196 wolves were documented in Wyoming outside of YNP and the WRR, with an additional 90 wolves documented in YNP and WRR, for a total of 286 wolves documented in the entirety of Wyoming at the end of 2018 (see table 3). After evaluating wolf population parameters for 2018, the Service concluded that Wyoming's wolf population remained well above the recovery targets of at least 10 breeding pairs and 100 wolves statewide with no significant threats identified (Becker 2019, entire).

The objective of the 2019 wolf hunting season was to stabilize the wolf population in Wyoming, outside of national parks and the WRR, at 160 wolves by the end of the calendar year. The WGFC approved a mortality limit of 34 wolves distributed across the 14 hunt areas within the WTGMA. The only significant change was that the season in hunt area 13 was extended to March 31, 2020, or until the harvest limit was reached, whichever came first, to increase hunting opportunity. Twenty-six wolves were harvested (25 legal, 1 illegal) during the hunting season with similar numbers of male and female wolves as well as age classes taken. However, the temporal distribution of harvest was heavily skewed towards the months of September and October, with zero wolves taken in December (WGFD et al. 2020, pp. 15–17). Twenty-three additional wolves were taken in the predatory animal area during 2019. A minimum of 201 wolves were documented in Wyoming outside of YNP and the WRR, with an additional 110 wolves documented in YNP and WRR, for a total of 311 wolves documented in the entirety of Wyoming at the end of 2019 (see table 3).

Wyoming has done, and continues to do, a suitable job of adaptively managing harvest using wolf demographic information including minimum counts and levels of other mortality factors from past years. Adaptive management will continue to be an important part of wolf management in Wyoming due to a lower abundance of wolves in the State compared to Idaho and Montana and because recent data indicates that a greater proportion of juvenile wolves have been harvested during the months of September and October compared to November and December when adults and subadults make up the majority of harvest (WGFD et al. 2020, p. 17). Contrary to what Ausband (2016, p. 501) demonstrated for juvenile wolves taken during the trapping season in Idaho, this indicates that juvenile wolves in Wyoming are more vulnerable to hunter harvest, at least during the early months of hunting seasons. Continued high rates of juvenile mortality could affect recruitment (Ausband et al. 2015, pp. 418–420), resulting in population declines if wolf populations are not monitored closely and adaptively managed to ensure they remain above minimum recovery levels. We anticipate monitoring by WGFD will be sufficient to detect significant changes in population status and that regulatory changes will be made to address any concerns as necessary.

Pending the Governor's signature, the WGFC recently approved Chapter 47 wolf harvest recommendations for the 2020–2021 season. The two primary regulatory changes for the upcoming season included an increase in the total harvest limit to 52 wolves within the WTGMA and a September 15 season start date for all hunt areas (with the exception of hunt area 12, which will continue to open October 15). Although increased harvest limits could result in continued high levels of juvenile harvest, later season start dates may reduce the number of juvenile wolves harvested during the initial months of the season. All other regulations are the same as previous years.

On the WRR, wolves are classified as a trophy game animal where legal take could occur during a regulated hunting or trapping season. Regulated take was not permitted on the WRR until 2019 when the Eastern Shoshone and Northern Arapaho Joint Business Council approved the first regulated wolf hunting season. A total harvest limit of six wolves was distributed evenly across two hunt areas. The wolf hunting season began on December 1, 2019, and closed on February 28, 2020, or until the harvest limit was reached in either hunt area, whichever occurred first. Mandatory reporting was required within 48 hours of harvest. No wolves were harvested on the WRR during the 2019–2020 season (WGFD et al. 2020, p. 24).

As described previously, the Federal status of wolves in Wyoming has changed on several occasions since 2009. Overall, during those years when wolves were under State management authority (including 2008 and 2014 when wolves were legally harvested in the predator area, but no regulated hunting season occurred in the WTGMA due to litigation), an average of 12 percent of Wyoming's wolf population was removed annually through harvest. If 2008 and 2014 are removed (the years that harvest was limited to the predatory animal area) and we evaluate regulated harvest only, an average of 15 percent of the wolf population in Wyoming was removed annually through harvest. Based on WGFD's adaptive management approach to managing wolves and wolf harvest, wolf populations in Wyoming have remained well above minimum recovery levels since 2002, regardless of whether they have been under State or Federal management authority.

Depredation Control in Wyoming—Federal wolf management in Wyoming was guided by a nonessential experimental population special rule under section 10(j) of the Act (59 FR 60266, November 22, 1994). After wolves were relisted in 2008, wolf management in the central Idaho and GYA recovery areas of the NRM reverted back to special rules published for the nonessential experimental population of wolves (73 FR 4720, January 28, 2008) because all States and some Tribes within these recovery areas had Service-approved wolf plans (see description of take allowed under the 2008 10(j) rules described above). However, after reexamining Wyoming's laws and wolf management plan, the Service deemed them unsatisfactory for the continued conservation of wolves in the State (74 FR 15123, April 2, 2009). As a result, Federal wolf management in Wyoming (outside of YNP and WRR) reverted back to the more restrictive special rules under section 10(j) of the Act published in 1994 (59 FR 42108, August 16, 1994). Under the 1994 10(j) rule, landowners on their private land and owners of domestic livestock (defined as cattle, sheep, horses, and mules) lawfully

using public lands could opportunistically harass wolves in a non-injurious manner. Livestock producers were also able to legally take adult wolves on their private property if they were caught in the act of killing, wounding, or biting livestock, provided the incident was reported within 24 hours and there was evidence of the attack. If livestock depredations were documented, the Service could conduct lethal control actions or issue a permit to a livestock producer or permittee grazing public lands to take an adult wolf or wolves caught in the act of killing, wounding, or biting livestock. This section 10(j) rule applied to wolf management in Wyoming between April 2009 and September 2012 and again between September 2014 and April 2017.

When wolves were under State management authority in Wyoming, Wyoming Statute (W.S.) 23–1–304 provided authority for the WGFC to promulgate rules and regulations related to the management of wolves in Wyoming where they are classified as trophy game animals. WGFC Chapter 21 regulations guide the management of wolves in the State within the WTGMA. Through education and outreach provided by WGFD, emphasis is directed towards conflict prevention and minimization of depredation risk (WGFC 2011, p. 30). However, when depredations do occur, agency response is evaluated on a case-by-case basis and may include no action, nonlethal control if it is deemed appropriate or the landowner requests it, capture and radio-collaring a wolf or wolves, issuance of a lethal take permit to the property owner, or agency-directed lethal control. The use of lethal force to resolve wolf-livestock conflicts by WGFD and their designated agents or private citizens is authorized under W.S. 23–1–304, W.S.23–3–115, and WGFC Chapter 21 regulations. However, lethal control will not be used, and any take permits that have been issued may be revoked, if wolf removal threatens the recovered status of wolves in the State.

Under W.S. 23–3–115 and WGFC Chapter 21 Section 6(a), any wolf in the act of doing damage to private property may be taken and killed by the owner provided the carcass is not removed from the site of the kill so an investigation can be completed and take is reported within 72 hours. If livestock depredations have been confirmed, WGFD or their authorized agents may conduct lethal control efforts to mitigate conflicts. WGFD may also issue a lethal take permit to the owner of the livestock or domestic animals, or their designees. Permits may be issued for a period of up to 45 days or until the number of wolves specified on the permit, up to two wolves, are killed, whichever occurs first. Permits may be renewed if deemed necessary. Lethal take permits will be issued only within the WTGMA.

In Wyoming, lethal control of depredating wolves increased concurrent with increases in wolf numbers and distribution as wolves recolonized available suitable habitat and began to occupy more moderate to less suitable habitat. Under Service direction, management of depredating wolves became more aggressive towards chronically depredating packs in the mid to late 2000s, which moderated the number of depredations and subsequent wolf removals so that the number of depredations no longer tracked with wolf population growth. Between 1995 and 2008, as a percentage of the total wolf population, 8 percent of the known Wyoming wolf population was removed annually. From 2009 to the present, the percentage of Wyoming's known wolf population lethally removed to resolve conflicts with livestock has increased slightly to 11 percent, but has been more variable with a slightly higher percentage of wolves removed under Federal authority (13 percent; range: 8–22 percent) when compared to State management authority (11 percent; range: 7–12 percent). As has been observed in Montana, since 2017 when Federal protections were most recently removed for wolves in Wyoming, the total number of wolves and the percentage of the population lethally removed to resolve livestock conflicts has declined to 30 wolves, which equals approximately 7 percent of the minimum known wolf population in 2019 (WGFD et al. 2020, p. 3). Similarly, the total number of damage claims and compensation payments for wolf-caused livestock losses has declined as wolves have been under State management authority (WGFD 2020a, p. 16).

Generally, Wyoming has a higher percentage of packs involved in livestock depredations annually with more depredations occurring on public lands than Idaho or Montana (WGFD et al. 2020, pp. 20–21). Seasonal trends in depredations are similar to other States that have a high percentage of livestock seasonally grazed on public lands where a slight increase in depredations occurs during early spring, coinciding with calving season, followed by a slight drop then an increase during the late summer months of July, August, and September (WGFD et al. 2020, pp. 21–22).

In addition to wolf control for livestock depredations, WGFC Chapter 21 Section 6(c) provides WGFD authorization to lethally remove wolves should it be determined that they are causing unacceptable impacts to wildlife or when wolves displace elk from State-managed feedgrounds. Displaced elk may result in damage to privately stored crops, commingling with domestic livestock, or human safety concerns due to their presence on public roadways. To date, no wolves have been removed in Wyoming under these provisions. However, in some cases, WGFD has used regulated public harvest of wolves to better direct sportsmen and -women to areas where it was believed wolves may be causing negative impacts to wildlife.

Since 2008, dependent on the Federal status of wolves in Wyoming, wolf management on the WRR has been guided by the amended 2008 10(j) rules for the nonessential experimental population of wolves in the Greater Yellowstone Area (73 FR 4720, January 28, 2008) or the provisions of a Service-approved WRR wolf management plan (Eastern Shoshone and Northern Arapaho Tribes 2008, entire). Under Federal or Tribal management authority, lethal take by private citizens or agencies is authorized if a wolf or wolves are caught in the act or if it is deemed necessary to resolve repeated conflicts with livestock. To date, a single wolf has been removed within the external boundaries of the WRR to mitigate conflicts with livestock. This wolf was included in the above totals when discussing lethal wolf control in Wyoming.

Wolf Population and Human-caused Mortality in Wyoming Summary—As expected, during those years when wolves were removed from Federal protections, human-caused mortality increased in Wyoming as WGFD implemented regulated harvest to manage wolf populations within the WTGMA. The WGFD set a population objective of 160 wolves within the WTGMA and has adaptively managed harvest to achieve this objective. Since 2009, during those years when wolves were federally listed (including years when harvest occurred under predator status only), the average rate of human-caused mortality was 14 percent. The average rate increased to 28 percent annually during those years when WGFD managed wolf populations with regulated public harvest. This management resulted in an overall negative growth rate for the wolf population in Wyoming during those years wolves were under State authority (an approximate 5 percent population decline on average during those years when wolves were federally delisted).

This gradual decline was expected as WGFD began to use harvest to meet wolf population objectives within the WTGMA (77 FR 55553, September 10, 2012). However, the observed decline is not expected to last because WGFD will continue to adaptively manage harvest to stabilize the wolf population at 160 wolves within the WTGMA (WGFD et al. 2020, p. 14), as has been evidenced by a slight increase in the statewide minimum wolf count in 2019 (see table 3). Minor variations around the average number of wolves removed in agency control actions, combined with other forms of mortality (*i.e.,* illegal take, natural causes, vehicle collisions, and unknown causes), can influence whether or not desired population objectives are achieved within the WTGMA, so annual adjustments to harvest limits will continue to be made accordingly in order to achieve WGFD management objectives and still maintain the recovered status of wolves in Wyoming.

Managers in YNP and the WRR have not set population objectives and have, for the most part, allowed wolves to naturally regulate. As a result, the number of wolves in YNP appear to have reached an equilibrium and have fluctuated slightly around 100 wolves for the past 10 years, while the number of wolves on the WRR has varied between 10 and 20 over the same time period. Regardless of how different agencies manage wolves, wolf populations have remained well above the Federal recovery targets of at least 10 breeding pairs and 100 wolves statewide, and we expect them to stay above this level because various jurisdictions in the State continue to coordinate to manage for a sustainable population of wolves in Wyoming.

Regulated Harvest in Oregon—No regulated hunting or trapping of wolves is authorized in Oregon.

Depredation Control in Oregon—In Oregon, an integrated approach to minimize wolf depredation risk has been implemented that incorporates both proactive and corrective measures. The primary objective of ODFW when addressing wolf-livestock conflicts is to continue to implement a three-phased approach based on population objectives that minimizes conflicts with livestock while ensuring conservation of wolves in the State (ODFW 2019, p. 44). This phased approach to wolf management emphasizes preventive and nonlethal methods in Phase I and provides for increased management flexibility when the wolf population is in Phase III. Presently, wolves inhabiting the West Wolf Management Zone (WWMZ) are managed under Phase I guidelines in the Oregon Wolf Conservation and Management Plan and associated rules, whereas wolves in the East Wolf Management Zone (EWMZ) are managed under Phase II guidelines. Wolves remain federally protected in the entirety of the WWMZ, whereas wolves in the EWMZ are federally protected in half of the management zone and are under State management authority in the other half (see figure 1, ODFW 2020, p. 3). Nonlethal methods will be prioritized to address wolf conflicts with livestock regardless of wolf population status (ODFW 2019, p. 45); however, lethal control may be authorized only in the eastern half of the EWMZ where they are under State management authority per OAR 635–110–0030.

Under Phase III wolf management (OAR 635–110–0030), lethal force may be used by property owners, livestock producers, or their designated agents to kill a wolf that is in the act of biting, wounding, killing, or chasing livestock or working dogs. If nonlethal methods were implemented following depredation events, but were unsuccessful at deterring recurrent depredations, ODFW may also issue a lethal take permit of limited duration to a livestock producer to kill a wolf. Similarly, ODFW, or their agents, may conduct lethal removal on private and public lands to minimize recurrent depredation risk. If wolves are taken by private citizens, take must be reported to ODFW within 24 hours. The ODFW Commission may also authorize controlled take in specific areas to address long-term, recurrent depredations or significant wolf-ungulate interactions.

Since 2009, agency-directed lethal control has resulted in the removal of 16 wolves in Oregon over an 11-year period. Additionally, two wolves have been legally taken by livestock producers or their designated agents when they were caught in the act of attacking livestock in 2016 (ODFW 2017, p. 11) and a herding dog in 2019 (ODFW 2020, p. 11). As a percentage of the total population of wolves in Oregon, lethal control of depredating wolves has removed an average of 2 percent of Oregon's wolf population annually (range: 0 to 13 percent). This amount is much lower than was documented in Idaho, Montana, and Wyoming during Service-directed wolf recovery in the NRM. No wolves have been removed in Oregon as a result of ODFW issuing a permit to a landowner or a livestock producer after two confirmed depredations or by controlled take through Commission authorization.

Wolf Population and Human-caused Mortality in Oregon Summary—Known human-caused mortality from all causes has resulted in the death of 40 wolves in Oregon since 2009. On average, human-caused mortality, inclusive of all sources, removes approximately 4 percent of the total wolf population in Oregon each year (range: 0 to 13 percent), which represents the lowest rate of human-caused mortality among States in the NRM. Since 2010, human-caused mortality has not exceeded 10 percent of the statewide wolf population in any given year, which has provided Oregon wolves the opportunity to increase at an average rate of 27 percent annually. As suitable wolf habitat in the northeast part of the State has become increasingly saturated, population growth has slowed somewhat and has ranged between 10 to 15 percent growth since 2017. Dispersing wolves from resident Oregon packs have recolonized portions of western Oregon as well as northern California and southeastern Washington.

In 2015, using an individual-based population model and vital rate estimates obtained from the literature for established or exploited wolf populations, ODFW documented a 0, 3, and 5 percent chance of conservation failure (defined as fewer than 4 breeding pairs) over a 5-, 10-, and 50-year period, respectively (ODFW 2015a, pp. 30–33). Further simulations suggested that as the wolf population in Oregon continued to increase, the risk of conservation failure concurrently declined. Rates of human-caused mortality up to 15 percent resulted in positive population growth, while rates of 20 percent caused population declines (ODFW 2015a, pp. 30–33). These rates of human-caused mortality were in addition to natural and other causes of mortality that were held constant and estimated at 12 percent. This resulted in a total mortality rate of 27 to 32 percent with which Oregon's wolf population would continue to increase or slightly decrease, respectively. These total mortality rates and their effects on wolf population growth in Oregon are comparable to wolf populations elsewhere (see NRM discussion above and USFWS 2020, p. 8). The rates of human-caused and total mortality in Oregon's wolf population are currently well below the thresholds described above and are estimated at 4 and 5 percent, respectively (see table 3). Mortality rates at this level provide ample opportunity for continued positive population growth and recolonization of suitable habitat in the State.

Regulated Harvest in Washington—To date, the Washington Department of Fish and Wildlife (WDFW) has not authorized and implemented regulated wolf harvest in the delisted portion of the State; however, the Confederated Tribes of the Colville Reservation (CTCR) and Spokane Tribe of Indians (STI) initiated regulated wolf harvest for Tribal members on Tribal lands only beginning in 2012 and 2013, respectively. Seasons have gradually become less restrictive to allow for increased hunter opportunity on CTCR Tribal lands. In 2019, the CTCR adopted wolf hunting regulations that allowed for year-round harvest with no bag limits (CCT Code Title 4 Natural Resources and Environment, Chapter 4–1, and Resolution 2019–255). Trapping is also permitted and seasons begin on November 1 and close February 28 with no bag limits on amount of take. As of December 31, 2019, 12 wolves have been legally harvested on CTCR lands since 2012.

Regulated wolf harvest is also allowed for Tribal members on the Spokane Indian Reservation in Washington. As stated previously, regulated wolf harvest began in 2013 and, similar to CTCR, has been designed to increase hunter opportunity, although the level of take has remained relatively low. At present, annual allowable take is a maximum of 10 wolves that may be harvested within the calendar year. If the maximum allowable take is reached, the season will close until the start of the next calendar year. Trapping and/or snaring on the Spokane Reservation is allowed by special permit only, issued by the STI Department of Natural Resources, and is open from October 1 through February 28. Between 2013 and 2019, 10 wolves have been legally harvested on the Spokane Indian Reservation.

Despite less restrictive regulations for harvest on Tribal lands in Washington, the total number of wolves legally harvested has been relatively low and has had minimal impact on wolf populations in the State (see table 3). Since 2012 when regulated take began, an average of 3 percent of the total statewide wolf population in Washington has been legally harvested annually (range: 0 to 4 percent).

Depredation Control in Washington—A primary goal of wolf management in Washington is to minimize livestock losses in a way that continues to provide for the recovery and long-term perpetuation of a sustainable wolf population (Wiles et al. 2011, p. 14). Nonlethal management of wolf conflicts is prioritized in the State (Wiles et al. 2011, p. 85; WDFW 2017, pp. 2–9). WDFW personnel work closely with livestock producers to implement conflict prevention measures suitable to each producers' operation. Interested livestock producers may also enter into a Depredation Prevention Cooperative Agreement with WDFW, which provides a cost-share for the implementation of conflict prevention tools (WDFW et al. 2020, p. 24).

In the eastern one-third of Washington where wolves are federally delisted and under the management authority of WDFW, State law (RCW 77.12.240) provides WDFW authority to implement lethal control to resolve repeated wolf-livestock conflicts when other methods were deemed unsuccessful in deterring depredations. The WDFW wolf-livestock and interaction protocol provides specific guidelines for when lethal control may be implemented (WDFW 2017, pp. 14–15). When lethal control is implemented, WDFW uses an incremental removal approach followed by an evaluation period to determine the effectiveness of any control action (WDFW 2017, p. 15).

Under State law (RCW 77.36.030 and RCW 77.12.240), administrative rule (WAC 220–440–080), and the provisions of the Wolf Conservation and Management Plan, WDFW may permit a livestock producer or their authorized employees in the federally delisted portion of the State to lethally remove wolves caught in the act of attacking livestock on private property or lawfully used public grazing allotments after a documented livestock depredation caused by wolves. Furthermore, WAC 220–440–080 provides authority for owners of domestic animals and their immediate family members or designated agents to kill one gray wolf without a permit in the delisted part of Washington if the wolf is attacking their animals (caught-in-the-act rule). Any wolf removed under these provisions must be reported to WDFW within 24 hours of take and the carcass must be surrendered to the agency.

Lethal control of depredating wolves was first used to mitigate wolf conflicts with livestock in 2012 when WDFW removed 7 wolves. Between 2013 and 2019, as Washington's wolf population continued to increase in number and expand in range, WDFW has used lethal control to resolve wolf conflicts with livestock in 5 of 7 years. In total, 31 wolves have been removed by WDFW due to conflicts with livestock between 2008, when wolves were first documented in the State, and 2019.

No wolves have been legally removed under authority of a lethal take permit issued to a livestock producer after a documented depredation. However, four wolves have been killed by owners of domestic animals under the caught-in-the-act rule, two each in 2017 and 2019.

The goal of wolf-livestock conflict management on the Colville Reservation is to resolve conflicts before they become chronic (Colville Confederated Tribes Fish and Wildlife Department [CCTFWD] 2017, p. 24). Potential livestock depredations on the Colville Reservation will be investigated by CCTFWD personnel. The CCTFWD personnel will work with livestock owners proactively and reactively to prevent and/or resolve conflicts as they arise (CCTFWD 2017, p. 24). To date, no wolves have been removed to resolve conflicts with livestock on the Colville Reservation.

The effect of agency-directed and private individual lethal control on Washington's wolf population has been relatively minor to date. Overall, the percentage of wolves removed annually through lethal control in Washington is less than what was documented in the core of the NRM in the years following wolf reintroduction. In Washington, as a percent of the minimum known population, an average of 4 percent of the total statewide wolf population has been removed due to conflicts with livestock annually (range: 0 to 12 percent; see table 3).

Analyses of factors that contribute to wolf-livestock conflicts in Washington indicate that, in general, areas having a high abundance of livestock (Hanley et al. 2018a, pp. 8–10) or high densities of both wolves and livestock (Hanley et al. 2018b, pp. 8–11) are at higher risk for conflict. Also, persistent wolf presence has not been documented in some Washington counties with the highest risk of wolf-livestock conflicts based on cattle abundance alone (Hanley et al. 2018a, p. 10), thus the potential exists for increased levels of conflict as wolves continue to recolonize portions of the State. Similar to Wyoming, but contrary to what has been documented in Montana and Idaho, most livestock depredations in Washington have occurred on public grazing allotments (Hanley et al. 2018a, pp. 8–10) where greater challenges exist to minimize conflict risk.

Wolf Population and Human-caused Mortality in Washington Summary—Since 2008 when wolves were first documented in Washington, human-caused mortality has been responsible for the average removal of 9 percent of the known wolf population annually; and has fluctuated between 6 percent and 11 percent of the known population annually since 2013 (see table 3). Over a similar time period, the mean total wolf mortality rate has been 10 percent

and ranged between 7 percent and 13 percent since 2013 (see table 3). According to the Washington Wolf Conservation and Management Plan, wolf recovery will be achieved when a minimum of 15 breeding pairs are equitably distributed across 3 wolf recovery areas in the State for 3 consecutive years or when 18 breeding pairs are documented for a single year (Wiles et al. 2011, pp. 58–70). Analyses indicate that once recovery is achieved, Washington's wolf population would be relatively resilient to increases in human-caused mortality provided a low level of dispersal from outside the State continues (Maletzke et al. 2015, p. 7).

Concurrent with increased rates of human-caused mortality, wolf numbers and distribution have continued to increase in Washington, although the rate of increase has slowed somewhat in recent years (WDFW et al. 2020, pp. 12–20). Since 2010, wolf populations have increased an average of 26 percent annually as dispersing wolves originating from both inside and outside of Washington continue to recolonize vacant suitable habitat in the State. Population growth has been most rapid in the eastern Washington recovery area due to its proximity to large wolf populations in the NRM and Canada. However, as suitable habitat in eastern Washington has become increasingly saturated with wolves, statewide population growth has declined in recent years (WDFW et al. 2020, pp. 12–20) and has ranged between 3 and 15 percent since 2017. Increases in wolf abundance and distribution continue at a moderate pace in the North Cascades recovery area. Documentation of dispersing individuals continues in the Southern Cascades and Northwest Coast recovery area, but, to date, confirmation of a resident pack has not occurred. Slow recolonization of this recovery area was anticipated by WDFW (Wiles et al. 2011, p. 69). Factors that may be contributing to the lack of documented, resident wolves in southwest Washington may include its distance from large wolf population centers and the availability of intervening suitable habitat between it and those population centers. However, with continued positive population growth and relatively low levels of human-caused mortality, substantial opportunities remain for dispersing wolves to recolonize vacant suitable habitat in Washington even though this may occur at a slower pace than some expect.

Table 3. Annual number of gray wolves known to have died by various causes, percent annual mortality, and statewide minimum wolf counts in the NRM DPS States from 2009–2019.

Year	Idaho					Montana							Wyoming					Oregon[1]				Washington				
	# Control	# Harvest	# Total Mortality[2]	% Total Mortality[3]	Yr. End Min. Count	# Control	# Harvest	# Total Mortality[2]	% Total Mortality[3] (Min. Count)	Yr. End Min. Count	% Total Mortality[3] (POM[4])	POM[4] Estimate	# Control	# Harvest[5]	# Total Mortality[2]	% Total Mortality[3]	Yr. End Min. Count	# Control	# Total Mortality[2]	% Total Mortality[3]	Yr. End Min. Count	# Control	# Harvest	# Total Mortality[2]	% Total Mortality[3]	Yr. End Min. Count
2009	93	135	272	24%	870	145	72	258	33%	524	23%	847	32	0	57	15%	320	2	2	13%	14	0	0	0	0%	14
2010	78	46	144	16%	777	141	0	179	24%	566	17%	862	40	0	69	17%	343	0	1	5%	21	0	0	0	0%	19
2011	63	200	296	28%	768	64	121	216	25%	653	18%	971	37	0	64	16%	328	2	3	9%	29	0	0	0	0%	35
2012	73	329	425	37%	722	108	175	324	34%	625	26%	915	43	67	136	33%	277	0	0	0%	48	7	0	9	15%	51
2013	94	356	473	42%	659	75	231	335	35%	627	24%	1,088	33	63	109	26%	306	0	3	4%	64	0	1	5	9%	52
2014	67	256	360	32%	770	57	213	306	36%	554	25%	898	37	12	78	19%	333	0	0	0%	81	1	0	10	13%	68
2015	75	256	357	31%	786	39	205	276	34%	536	22%	981	54	0	84	18%	382	0	7	6%	110	0	3	7	7%	90
2016	70	267	NA	NA	NA	52	255	334	41%	477	29%	814	113	0	132	26%	377	5	7	6%	112	7	3	14	11%	115
2017	NA	281	NA	NA	NA	57	233	305	33%	633	26%	854	62	77	168	33%	347	5	13	9%	124	5	3	14	10%	122
2018	NA	329	NA	NA	NA	60	259	341	NA	NA	29%	819	66	85	177	38%	286	3	7	5%	137	4	6	12	9%	126
2019	NA	NA	NA	NA	1,000[6]	NA	NA	NA	NA	NA	NA	NA	30	49	96	24%	311	1	7	4%	158	11	6	21	13%	145

[1]Legal harvest not authorized by the State.

[2]Total represents all known mortality during the associated calendar year.

[3]Annual percent total mortality based on known number of wolves and known total number of wolves that died that year of any cause. Derived by adding # Total Mortality to Year End Minimum Count (i.e., the minimum number of wolves known to be alive at some point during the year), and then dividing by the # Total Mortality the number known to be alive during that year.

[4]Patch occupancy modeling.

[5]Includes harvest in trophy game (i.e., WTGMA) and predatory animal areas.

[6]Estimate not derived using minimum population count method; thus, not directly comparable to prior year counts.

Effects on Wolf Social Structure and Pack Dynamics

Although wolf populations typically have a high rate of natural turnover (Mech 2006a, p. 1482), increased human-caused mortality may negatively affect the pack dynamics and social structure of gray wolves. However, we do not expect these effects will have a significant impact at the population level due to the life-history characteristics of gray wolves. In most instances, only the dominant male and female in a pack breed. Consequently, the death of one or both of the breeders may negatively affect the pack (via reduced pup survival/recruitment or pack dissolution) or the population as a whole (by reduced recruitment, reduced dispersal rates, or a reduction or reversal of population growth), but these effects are context-dependent. The availability of replacement breeders and the timing of mortality can moderate the consequences of breeder loss on both the pack and the population (Brainerd et al. 2008, entire; Borg et al. 2014, entire; Schmidt et al. 2017, entire; Bassing et al. 2019, entire). In populations that are at or near carrying capacity, where breeder replacement and subsequent reproduction occurs relatively quickly, population growth rate and pack distribution and occupancy is largely unaffected by breeder loss (Borg et al. 2014, pp. 6–7; Bassing et al. 2019, pp. 582–584). Breeder replacement and subsequent reproduction in colonizing populations greater than 75 wolves was similar to that of core populations at or near carrying capacity, whereas small recolonizing populations (<75 wolves) took about twice as long to replace breeders and subsequently reproduce (Brainerd et al. 2008, pp. 89, 93). Therefore, the effects of breeder loss may be greatest on small recolonizing gray wolf populations. In some cases where extremely high rates of human-caused mortality were intentionally used to drastically reduce wolf populations, immigration from neighboring areas was found to be the most important determinant in the speed with which wolf populations recovered (Bergerud and Elliot 1998, pp. 1554–1559, 1562; Hayes and Harestead 2000, pp. 44–46).

In the short term, increased human-caused mortality can result in lower natality rates (the number of pups produced) and pup survival in individual packs due to an overall reduction in pack size and the loss of one or both breeders (Schmidt et al. 2017, pp. 14–18; Ausband et al. 2017a, pp. 4–6). However, wolf populations respond to decreased densities resulting from increased human-caused mortality by increasing reproductive output (Schmidt et al. 2017, pp. 14–18). This could partially explain the fact that the reduction in pack sizes observed in Idaho after wolf hunts began was short-lived, as pack sizes rebounded to levels documented prior to the initiation of hunting seasons and mid-year recruitment of young was similar during periods of harvest versus without (Horne et al. 2019a, pp. 37–38). In another study, breeding female turnover increased polygamy within packs while breeding male turnover reduced recruitment of female pups, although the mechanisms for the latter were unknown (Ausband et al. 2017b, pp. 1097–1098). Mortality of breeding gray wolves was more likely to lead to pack dissolution and reduced reproduction when mortality occurred very near to, or during, the breeding season (Borg et al. 2014, p. 8, Ausband et al. 2017a, pp. 4–5) and when pack sizes were small (Brainerd et al. 2008, p. 94; Borg et al. 2014, pp. 5–6). Nonetheless, harvest had no effect on the frequency of breeder turnover in Idaho (Ausband et al. 2017b, p. 1097) and little evidence of pack dissolution was found in a heavily harvested wolf population with frequent breeder loss in southwestern Alberta (Bassing et al. 2019, pp. 584–585).

Bryan et al. (2015, pp. 351–354) indicated that high rates of human-caused mortality resulted in physiological changes to wolves that increased levels of cortisol as well as reproductive hormones. The authors suggest these results were indicative of social disruptions to the pack that affected the rate of female pregnancy or psuedopregnancy and the number of interindividual interactions among male wolves (Bryan et al. 2015, pp. 351–352). However, it was unknown if these physiological changes affected overall fitness (*i.e.,* reproductive and population performance) of the affected wolf population or if other factors contributed equally to, or more than, wolf harvest (Bryan et al. 2015, pp. 351–354). Boonstra (2012, entire) suggested that chronic stress in wildlife was rare, but could be considered adaptive in that it benefits the affected species, which allows it to adapt to changing conditions to maintain, or improve, long-term fitness. Indeed, Bryan et al. (2015, p. 351) suggested that the physiological changes observed in the stressed wolf population could be considered adaptive and beneficial to the wolf when dealing with the specific stressors. Due to the inherent challenges associated with interpreting the specific causes and effects of stress in wildlife, experimental field studies that evaluate potential factors contributing to observed increases in stress and their associated positive or negative effects on wildlife populations are warranted (Boonstra 2012, p. 10).

Overall, gray wolf pack social structure is very adaptable and resilient. Breeding members can be quickly replaced from either within or outside the pack, and pups can be reared by another pack member should their parents die (USFWS 2020, p. 7). Consequently, wolf populations can rapidly overcome severe disruptions, such as intensive human-caused mortality or disease, provided immigration from either (or both) within the affected population or from adjacent populations occurs (Bergerud and Elliot 1998, pp. 1554–1559; Hayes and Harestad 2000, pp. 44–46; Bassing et al. 2019, entire). Although we acknowledge that breeder loss can and will occur in the future regardless of Federal status, we conclude that the effects of breeder loss on gray wolves in the lower 48 United States is likely to be minimal as long as adequate regulatory mechanisms are in place to ensure a sufficiently large population is maintained.

The Role of Public Attitudes

In general, human attitudes toward wolves vary depending upon how individuals value wolves in light of real or perceived risks and benefits (Bruskotter and Wilson 2014, entire). An individual who views wolves as threatening is likely to have a more negative perception than an individual who believes wolves are beneficial. This perception may be directly influenced by an individual's proximity to wolves (Houston et al. 2010, pp. 399–401; Holsman et al. 2014, entire; Carlson et al. 2020, pp. 4–6), personal experiences with wolves (Houston et al. 2010, pp. 399–401; Browne-Nunez et al. 2015, pp. 62–69), or indirect factors such as social influences (*e.g.,* news and social media, internet, friends, relatives) and governmental policies (Houston et al. 2010, pp. 399–401; Treves and Bruskotter 2014, p. 477, Browne-Nunez et al. 2015, pp. 62–69; Olson et al. 2014, entire; Chapron and Treves 2016, p. 5; Lute et al. 2016, pp. 1208–1209; Carlson et al. 2020, pp. 4–6). Consequently, wolves often invoke deep-seated issues related to identity, fear, knowledge, empowerment, and trust that are not directly related to the issues raised in this rulemaking (Naughton-Treves et al. 2003, pp. 1507–1508; Madden 2004, p. 250; Madden and McQuinn 2014, pp. 100–102; Browne-Nunez et al. 2015, p. 69; Carlson et al. 2020, pp. 4–6). Due to these known human attitudes, in our

1978 rule reclassifying wolves, we acknowledged that regulations prohibiting the killing of wolves, even wolves that may be attacking livestock and pets, could create negative sentiments about wolves and their recovery under the protections of the Act. We acknowledge that public attitudes towards wolves vary with demographics, change over time, and can affect human behavior toward wolves, including poaching (illegal killing) of wolves (See Kellert 1985, 1990, 1999; Nelson and Franson 1988; Kellert et al. 1996; Wilson 1999; Browne-Nuñez and Taylor 2002; Williams et al. 2002; Manfredo et al. 2003; Naughton-Treves et al. 2003; Madden 2004; Mertig 2004; Chavez et al. 2005; Schanning and Vazquez 2005; Beyer et al. 2006; Hammill 2007; Schanning 2009; Treves et al. 2009; Wilson and Bruskotter 2009; Shelley et al. 2011; Treves and Martin 2011; Treves et al. 2013; Madden and McQuinn 2014; Hogberg et al. 2016; Lute et al. 2016).

Surveys have indicated that overall public support for legal, regulated wolf hunting is relatively high, but negative attitudes about wolves persist and overall tolerance for wolves remains low (Browne-Nunez 2015 pp. 62–69; Hogberg et al. 2016, pp. 49–50; Lute et al. 2016, pp. 1206–1208; Lewis et al. 2018, entire). Hogberg et al. (2016, p. 50) documented an overall decline in tolerance for wolves after public harvest occurred in Wisconsin, which indicates that hunting may not be the most effective policy to increase tolerance for the species (Epstein 2017, entire). However, Hogberg et al. (2016, p. 50) also documented that 36 percent of respondents self-reported an increase in their tolerance towards wolves after wolf hunting began in Wisconsin. Similarly, a survey conducted in Montana (Lewis et al. 2018, entire) found that while overall tolerance remained low compared to a similar survey from 2012, it had slightly increased over time as the State has continued to manage wolves primarily through public harvest. Furthermore, statements made by interviewees regarding hunting and trapping of wolves in Montana indicate that, if those management options were no longer available to them, their tolerance and acceptance of the species would likely decline, resulting in increased polarization of opinions about wolves (Mulder 2014, p. 68). These studies suggest that the passage of time (which may be considered equivalent to an individual getting used to having wolves on the landscape even though wolves may still be disliked) and the belief that State management provides more opportunities for an individual to assist with wolf population management are two factors, of many, that may slowly increase tolerance for wolves. Although general trends in overall attitudes towards wolves are most often obtained through surveys, Browne-Nunez et al. (2015, p. 69) cautioned that these surveys often do not capture the complexity of attitudes that more personal survey techniques, such as focus groups, allow. Furthermore, Decker et al. (2006, p. 431) stressed the importance of providing details about situational context when evaluating human attitudes towards specific wildlife management actions.

Human attitudes may be indicative of behavior (Bruskotter and Fulton 2012, pp. 99–100). Thus, it has been theorized that if tolerance for a species is low or declining, the likelihood for illegal activity towards that species may increase. Individual attitudes and behaviors may then be manifested by actions directed towards the species. In the case of wolves, if an individual feels they have limited management options to mitigate a real or perceived conflict, they may be more likely to act illegally in an attempt to address the conflict. Indeed, using empirical data from Wisconsin, researchers studied trends in the illegal killing of wolves and documented that rates of illegal take of wolves in the State was higher during periods of less management flexibility (*e.g.,* during periods when wolves were federally protected) when compared to more flexible State management that permitted lethal control of depredating wolves as a mitigation response (Olson et al. 2014, entire). Another study contradicted these results and indicated that illegal take of wolves increased during periods of State management in Wisconsin and Michigan because, the authors argued, the perceived value of wolves declined as agencies increased culling activities (Chapron and Treves 2016, entire). However, this analysis has since been refuted by Olson et al. (2017, entire) and Pepin et al. (2017, entire). Furthermore, Stein (2017, entire) reanalyzed the same data but included variation in reproductive rates and concluded that the use of lethal depredation control to mitigate wolf-livestock conflicts decreased the likelihood of illegal take.

Strong emotions and divergent viewpoints about wolves and wolf management will continue regardless of the Federal status of the species. We expect that some segments of the public will be more tolerant of wolf management at the State level because it may be perceived by some as more flexible than Federal regulation, whereas other segments may continue to prefer Federal management due to a perception that it is more protective. State wildlife agencies have professional staff dedicated to disseminating accurate, science-based information about wolves and wolf management. They also have experience in managing wildlife to maintain long-term sustainable populations with enforcement staff to enforce State wildlife laws and regulations. To be more inclusive of constituents with different values, several States, including Washington and Wisconsin, have convened advisory committees to engage multiple stakeholder groups in discussing and addressing present and future management in their respective States (WDFW 2020, entire; WI DNR 2020, entire). As the status and management of the gray wolf evolves, continued collaboration between managers and researchers to monitor public attitudes toward wolves and their management will help guide State conservation actions.

Human-Caused Mortality Summary

Despite human-caused wolf mortality, wolf populations have continued to increase in both number and range since the mid-to-late 1970s (Smith et al. 2010, entire; O'Neil et al. 2017, entire; Stenglein et al. 2018, entire). Although legal mortality (primarily in the form of legal harvest and lethal control) will increase in the Great Lakes area after delisting, as has occurred within the NRM states of Idaho, Montana, and Wyoming, we do not expect that this will have a significant effect on the wolf population in this area. We also do not expect to see significant increases in human-caused mortality in the West Coast States primarily because those States have regulatory mechanisms in place that balance wolf management and wolf conservation. Similarly, we do not expect that current, or potentially increased, levels of human-caused mortality post-delisting will have a significant effect on the recolonization and establishment of wolves in the central Rocky Mountain States due to the life-history characteristics of wolves and their ability to recolonize vacant suitable habitat. Furthermore, the central Rocky Mountain States have existing laws and regulations to conserve wolves, and Utah has a management plan that will be implemented post-delisting to guide wolf management in the State. Based on knowledge gained about wolf population responses to increases in human-caused mortality during past

delisting efforts in the Great Lakes area, as well as the currently delisted NRM wolf population, we expect to see an initial population decline followed by fluctuations around an equilibrium resulting from slight variations in birth and death rates. Further, compensatory mechanisms in wolf populations provide some resiliency to perturbations caused by increased human-caused mortality. Wolves have evolved mechanisms to compensate for increased mortality, which makes populations resilient to perturbations.

Minnesota, Wisconsin, and Michigan will use adaptive management to respond to wolf population fluctuations to maintain populations at sustainable levels well above Federal recovery requirements defined in the Revised Recovery Plan. Because wolf population numbers in each of these three States are currently much higher than Federal recovery requirements, we expect to see some reduction in wolf populations in the Great Lakes area when they are delisted as States implement lethal depredation control and decide whether to institute wolf hunting seasons with the objective of stabilizing or reversing population growth. However, the States have plans in place to achieve their goal of maintaining wolf populations well above Federal recovery targets (see Post-delisting Management).

The 2019 State management plan for Oregon and the 2016 plan for California do not include population-management goals (Oregon Department of Fish and Wildlife (ODFW) 2019, p. 17; California Department of Fish and Wildlife (CDFW) 2016a, p. 12). While the 2011 Washington State management plan does not include population-management goals, it includes recovery objectives intended to ensure the reestablishment of a self-sustaining population of wolves in Washington (Wiles et al. 2011, p. 9). We expect these States will manage wolves through appropriate laws and regulations to ensure recovery objectives outlined in their respective wolf management plans are achieved. The State management plan for Utah, which will be implemented when wolves are federally delisted statewide, will guide management of wolves until 2030 or until at least two breeding pairs occur in the State for two consecutive years, or until the assumptions of the plan change. For additional information on management plans and objectives in California, Oregon, Washington, and Utah, see Post-delisting Management.

Habitat and Prey Availability

Gray wolves are habitat generalists (Mech and Boitani 2003, p. 163) and once occupied or transited most of the United States, except the Southeast. To identify areas of suitable wolf habitat in the lower 48 United States, researchers have used models that relate the distribution of wolves to characteristics of the landscape. These models have shown the presence of wolves is correlated with prey density, livestock density, landscape productivity, winter rainfall, snow, topography, road density, human density, land ownership, habitat patch size, and forest cover (*e.g.,* Mladenoff et al. 1995, pp. 284–292; Mladenoff et al. 1999, pp. 41–43; Carroll et al. 2006, p. 542; Oakleaf et al. 2006, pp. 558–559; and Hanley et al. 2018a, pp. 6–8). Aside from direct and indirect measures of prey availability and livestock density, these environmental variables are proxies for the likelihood of wolf-human conflict and the ability of wolves to escape human-caused mortality. Therefore, predictions of suitable habitat generally depict areas with sufficient prey, where human-caused mortality is likely to be relatively low due to limited human access, high amounts of escape cover, or relatively low numbers of wolf-livestock conflicts. We consider suitable habitat to be areas containing adequate wild ungulate populations (*e.g.,* elk and deer), adequate habitat cover, and areas with low enough wolf-human conflict (which generally precipitates human-caused wolf mortality) to allow populations to persist (see Mech 2017, pp. 312–315).

Much of the area currently occupied by wolves corresponds to what is considered suitable wolf habitat in the lower 48 United States as modeled by Oakleaf et al. (2006, entire), Carroll et al. (2006, entire), Mladenoff et al. (1995, entire), and Mladenoff et al. (1999, entire). Habitat and population models indicate that, if human-caused wolf mortality can be sufficiently limited, wolves will likely continue to recolonize areas of the Pacific Northwest (Maletzke et al. 2015, entire; ODFW 2015b, entire) and California (Nickel and Walther 2019, pp. 386–389); and could become established in the central and southern Rocky Mountains (Carroll et al. 2006, pp. 27, 31–32), and the Northeast (Mladenoff and Sickley 1998, p. 3). While it is also possible for wolves to recolonize other non-forested portions of their historical range in the Midwest (Smith et al. 2016, entire), relatively high densities of livestock and limited hiding cover for wolves (forests) in this region are likely reasons that wolves have failed to recolonize this area (Smith et al. 2016, pp. 560–561).

In addition to suitable habitat, we assessed prey availability based on population estimates and population targets provided by State wildlife agencies, as well as land management activities that might affect prey populations (see below). Prey availability is a primary factor in sustaining wolf populations. Each State within wolf-occupied range manages its wild ungulate populations sustainably. States employ an adaptive-management approach that adjusts hunter harvest in response to changes in big game population numbers and trends when necessary, and predation is one of many factors considered when setting seasons. We acknowledge the continued spread of chronic wasting disease (CWD) among cervids in North America and provide some additional information here regarding our current state of knowledge of this emerging disease and potential impacts to wolf prey. CWD is a contagious prion disease that affects hoofed animals, such as deer, elk, and moose, is neurodegenerative, rapidly progressive, and always fatal (reviewed by Escobar et al. 2020, entire). Prions are the proteinaceous infection agents responsible for prion diseases (Escobar et al. 2020, p. 2) that are hardy in the environment and can remain infective for years to decades (reviewed by Escobar et al. 2020, p. 8). CWD was first identified in a Colorado research facility in the 1960s, and in wild deer in 1981 (CDC 2020, unpaginated). CWD continues to spread in North America (Escobar et al. 2020, p. 24) and is currently confirmed in 24 States (CDC 2020, unpaginated). Within the current range of the gray wolf, CWD has been confirmed in Montana, Wyoming, Colorado, Minnesota, Wisconsin, and Michigan (CDC 2020, unpaginated).

While CWD has caused population declines of deer and elk in some areas (*e.g.,* Miller et al. 2008, pp. 2–6; Edmunds et al. 2016, p. 12; DeVivo et al. 2017, entire), the prevalence of the disease across the landscape is not evenly distributed and there is still much to learn about CWD prevalence, the spatial distribution of the disease, transmission, and the elusive properties of prions (Escobar et al. 2020, pp. 7–13). State wildlife agencies—all of whom have a vested interest in maintaining robust populations of deer, elk, and moose—have developed surveillance strategies and management response plans to minimize and mitigate this threat to cervids to the maximum extent practicable (CPW 2018, entire; MFWP 2019a, entire; WGFD 2020b, entire; MI DNR and MDARD 2012, entire; WI DNR 2010, entire; MN DNR 2019, entire; IDFG 2018, entire). Simulation models predict that predation by wolves and

other carnivores can lead to a significant reduction in the prevalence of CWD infections across the landscape (see Hobbs 2006, p. 8; Wild et al. 2011, pp. 82–88), thereby slowing its spread, partially because large carnivores selectively prey on CWD-infected individuals (Krumm et al. 2010, p. 210). However, in areas of high disease prevalence, prion epidemics can negatively affect local prey populations even with selective predation pressure (Miller et al. 2008, p. 2). How prey populations are altered by the emergence of CWD at larger geographic scales remains to be determined (Miller et al. 2008, p. 2). While some have speculated that wolves and other carnivores may be vectors for spreading the disease—or, conversely, slowing the spread of the disease—neither has been empirically shown in the wild (Escobar et al. 2020, p. 10).

Great Lakes Area: Suitable Habitat

Various researchers have investigated habitat suitability for wolves in the central and eastern portions of the United States. Most of these efforts have focused on using a combination of human density, density of agricultural lands, deer density or deer biomass, and road density, or have used road density alone to identify areas where wolf populations are likely to persist or become established (Mladenoff et al. 1995, pp. 284–285; 1997, pp. 23–27; 1999, pp. 39–43; Harrison and Chapin 1997, p. 3; 1998, pp. 769–770; Mladenoff and Sickley 1998, pp. 1–8; Wydeven et al. 2001, pp. 110–113; Erb and Benson 2004, p. 2; Potvin et al. 2005, pp. 1661–1668; Mladenoff et al. 2009, pp. 132–135; Smith et al. 2016, pp. 559–562).

To a large extent, road density has been adopted as the best predictor of habitat suitability in the Midwest due to the connection between roads and human-caused wolf mortality. Several studies demonstrated that wolves generally did not maintain breeding packs in areas with a road density greater than about 0.9 to 1.1 linear mi per mi^2 (0.6 to 0.7 km per km^2) (Thiel 1985, pp. 404–406; Jensen et al. 1986, pp. 364–366; Mech et al. 1988, pp. 85–87; Fuller et al. 1992, pp. 48–51). Work by Mladenoff and associates indicated that colonizing wolves in Wisconsin preferred areas where road densities were less than 0.7 mi per mi^2 (0.45 km per km^2) (Mladenoff et al. 1995, p. 289). Later work showed that during early colonization wolves selected some of the lowest road density areas, but as the wolf population grew and expanded, wolves accepted areas with higher road densities (Mladenoff et al. 2009, pp. 129–136). Research in the Upper Peninsula of Michigan indicates that, in some areas with low road densities, low deer density appears to limit wolf occupancy (Potvin et al. 2005, pp. 1667–1668) and may prevent recolonization of portions of the Upper Peninsula. In Minnesota, a combination of road density and human density is used by Minnesota Department of Natural Resources (MN DNR) to model suitable habitat. Areas with a human density up to 20 people per mi^2 (8 people per km^2) are suitable if they also have a road density less than 0.8 mi per mi^2 (0.5 km per km^2). Areas with a human density of less than 10 people per mi^2 (4 people per km^2) are suitable if they have road densities up to 1.1 mi per mi^2 (0.7 km per km^2) (Erb and Benson 2004, table 1). Smith et al. (2016, p. 560) relied mainly on road density and human population density to assess potential wolf habitat across the central United States, and thus may show exaggerated potential for wolf colonization, especially in the western Great Plains that lack forest cover.

Road density is a useful parameter because it is easily measured and mapped, and because it correlates directly and indirectly with various forms of other human-caused wolf mortality. A rural area with more roads generally has a greater human density, more vehicular traffic, greater access by hunters and trappers, more farms and residences, and more domestic animals. As a result, there is a greater likelihood that wolves in such an area will encounter humans, domestic animals, and various human activities. These encounters may result in wolves being hit by motor vehicles, being subjected to government control actions after becoming involved in depredations on domestic animals, being shot intentionally by unauthorized individuals, being trapped or shot accidentally, or contracting diseases from domestic dogs (Mech et al. 1988, pp. 86–87; Mech and Goyal 1993, p. 332; Mladenoff et al. 1995, pp. 282, 291). Stenglein et al. (2018, p. 106) demonstrated that in the core of wolf range and in high-quality habitat, survival rate ranged 0.78–0.82. At the edge of wolf range and into more marginal habitat, survival rates declined to 0.49–0.61 (Stenglein et al. 2018, p. 106). Also, natural mortality was more prevalent in core habitat, whereas there was a shift to a prominence of human-caused mortality in more marginal habitat (Stenglein et al. 2018, p. 107).

Some researchers have used a road density of 1 mi per mi^2 (0.6 km per km^2) of land area as an upper threshold for suitable wolf habitat. However, the common practice in more recent studies is to use road density to predict probabilities of persistent wolf pack presence in an area. Areas with road densities less than 0.7 mi per mi^2 (0.45 km per km^2) are estimated to have a greater than 50 percent probability of wolf pack colonization and persistent presence, and areas where road density exceeded 1 mi per mi^2 (0.6 km per km^2) have less than a 10 percent probability of occupancy (Mladenoff et al. 1995, pp. 288–289; Mladenoff and Sickley 1998, p. 5; Mladenoff et al. 1999, pp. 40–41). The predictive ability of this model was questioned (Mech 2006b, entire; Mech 2006c, entire) and responded to (Mladenoff et al. 2006, entire), and an updated analysis of Wisconsin pack locations and habitat was completed (Mladenoff et al. 2009, entire). This model maintains that road density is still an important indicator of suitable wolf habitat; however, lack of agricultural land is also a strong predictor of habitat that wolves occupy.

Wisconsin researchers view areas with greater than 50 percent probability of wolf pack colonization and persistence as ''primary wolf habitat,'' areas with 10 to 50 percent probability as ''secondary wolf habitat,'' and areas with less than 10 percent probability as unsuitable habitat (Wisconsin Department of Natural Resources (WI DNR) 1999, pp. 47–48).

The territories of packs that do occur in areas of high road density, and hence with low expected probabilities of occupancy, are generally near areas of more suitable habitat that are likely serving as a source of wolves, thereby assisting in maintaining wolf presence in the higher road density areas (Mech 1989, pp. 387–388; Wydeven et al. 2001, p. 112). It appears that essentially all suitable habitat in Minnesota is now occupied, range expansion has slowed, and the wolf population within the State has stabilized (Erb and Benson 2004, p. 7; Erb and DonCarlos 2009, pp. 57, 60; Erb et al. 2018, pp. 5, 8). This suitable habitat closely matches the areas designated as Wolf Management Zones 1 through 4 in the Revised Recovery Plan (USFWS 1992, p. 72), which are identical in area to Minnesota Wolf Management Zone A (MN DNR 2001, appendix III).

Recent surveys for Wisconsin wolves and wolf packs show that wolves have recolonized the areas predicted by habitat models to have low, moderate, and high probability of occupancy (primary and secondary wolf habitat). The late-winter 2017–2018 Wisconsin wolf survey identified packs occurring throughout the central Wisconsin forest

area (Wolf Management Zone 2) and across the northern forest zone (Zone 1), with highest pack densities in the northwest and north-central forest (WI DNR 2018, entire). In Michigan, wolf surveys in winter 2017–2018 continue to show wolf pairs or packs (defined by Michigan DNR as two or more wolves traveling together) in every Upper Peninsula County (MI DNR 2018, entire).

Habitat suitability studies in the Upper Midwest indicate that the only large areas of suitable or potentially suitable habitat areas that are currently unoccupied by wolves are located in the northern Lower Peninsula of Michigan (Mladenoff et al. 1997, p. 23; Mladenoff et al. 1999, p. 39; Potvin 2003, pp. 44–45; Gehring and Potter 2005, p. 1239). One published Michigan study (Gehring and Potter 2005, p. 1239) estimates that this area could support 46 to 89 wolves while another study estimated that 110–480 wolves could exist in the northern Lower Peninsula (Potvin 2003, p. 39). A recent study that assessed potential den habitat and dispersal corridors in the northern Lower Peninsula determined that 736 mi^2 (1,906 km^2) of high-quality den habitat existed in the region, but the landscape has low permeability for wolf movement (Stricker et al. 2019, pp. 87–88). The northern Lower Peninsula is separated from the Upper Peninsula by the Straits of Mackinac, whose 4-mile (6.4-km) width freezes during mid- and late-winter in some years. In recent years there have been two documented occurrences of wolves in the northern Lower Peninsula, but there has been no indication of persistence beyond several months. Prior to those occurrences, the last recorded wolf in the Lower Peninsula was in 1910.

These northern Lower Peninsula patches of potentially suitable habitat contain a great deal of private land, are small in comparison to the occupied habitat on the Upper Peninsula and in Minnesota and Wisconsin, and are intermixed with agricultural areas and areas of higher road density (Gehring and Potter 2005, p. 1240). The Gehring and Potter study (2005, p. 1239) predicted 850 mi^2 (2,198 km^2) of suitable habitat (areas with greater than a 50 percent probability of wolf occupancy) in the northern Lower Peninsula. Potvin (2003, p. 21), using deer density in addition to road density, believes there are about 3,090 mi^2 (8,000 km^2) of suitable habitat in the northern Lower Peninsula. Gehring and Potter (2005, p. 1239) exclude from their calculations those northern Lower Peninsula low-road-density patches that are less than 19 mi^2 (50 km^2), while Potvin (2003, pp. 10–15) does not limit habitat patch size in his calculations. Both of these area estimates are well below the minimum area described in the Revised Recovery Plan, which states that 10,000 mi^2 (25,600 km^2) of contiguous suitable habitat is needed for a viable isolated gray wolf population, and half that area (5,000 mi^2 or 12,800 km^2) is needed to maintain a viable wolf population that is subject to wolf immigration from a nearby population (USFWS 1992, pp. 25–26). Therefore, continuing wolf immigration from the Upper Peninsula may be necessary to maintain a future northern Lower Peninsula population.

Based on the above-described studies and the guidance of the 1992 Revised Recovery Plan, the Service has concluded that suitable habitat for wolves in the western Great Lakes area can be determined by considering four factors: Road density, human density, prey base, and area. An adequate prey base is an absolute requirement. In much of the western Great Lakes area, with the exception of portions of the Upper Peninsula of Michigan where deep snow causes deer to congregate (yard-up) during winter, thereby limiting deer distribution and availability, white-tailed deer densities are well above management objectives set forth by the States, causing the other factors to become the determinants of suitable habitat. Road density and human density frequently are highly correlated; therefore, road density is often used as a predictor of habitat suitability. However, areas with higher road density may still be suitable if the human density is very low, so a consideration of both factors is sometimes useful (Erb and Benson 2004, p. 2). Finally, although the territory of individual wolf packs can be relatively small, packs are not likely to establish territories in areas of small, isolated patches of suitable habitat.

Great Lakes Area: Prey Availability

Deer (prey) decline, due to succession of habitat and severe winter weather, was identified as a threat at the time of listing. Wolf density is heavily dependent on prey availability (for example, expressed as ungulate biomass, Fuller et al. 2003, pp. 170–171), and the primary prey of wolves in the Great Lakes area is white-tailed deer, with moose being the second most important prey (DelGiudice et al. 2009, pp. 162–163). Prey availability is high in the Great Lakes area; white-tailed deer populations in the region have fluctuated (in response to natural environmental conditions) throughout the wolf recovery period, but have been consistently at relatively high densities (DelGiudice et al. 2009, p. 162).

Conservation of white-tailed deer and moose in the Great Lakes area is a high priority for State conservation agencies. As MN DNR points out in its wolf-management plan (MN DNR 2001, p. 25), it manages ungulates to ensure a harvestable surplus for hunters, nonconsumptive users, and to minimize conflicts with humans. To ensure a harvestable surplus for hunters, MN DNR must account for all sources of natural mortality, including loss to wolves, and adjust hunter harvest levels when necessary. For example, after severe winters in the 1990's, MN DNR modified hunter harvest levels to allow for the recovery of the local deer population (MN DNR 2001, p. 25). In addition to regulating the human harvest of deer and moose, MN DNR also plans to continue to monitor and improve habitat for these species.

Land management activities carried out by other public agencies and by private landowners in Minnesota's wolf range, including timber harvest and prescribed fire, incidentally and significantly improves habitat for deer, the primary prey for wolves in the State. Approximately one-half of the Minnesota deer harvest is in the Forest Zone, which encompasses most of the occupied wolf range in the State (Cornicelli 2008, pp. 208–209). There is no indication that harvest of deer and moose or management of their habitat will significantly depress abundance of these species in Minnesota's primary wolf range.

In Wisconsin, the statewide post-hunt white-tailed deer population estimate for 2017 was approximately 1,377,100 deer, approximately 2 percent higher than in 2016 (Stenglein 2017, pp. 1–4). In the Northern Forest Zone of the State, the post-hunt population estimate has ranged from approximately 250,000 deer to more than 400,000 deer since 2002, with an estimate of 405,300 in 2017. Three consecutive mild winters and limited antlerless harvest may explain the population growth in the northern deer herd in 2017. The Central Forest Zone post-hunt population estimates have been largely stable since 2009 at 60,000–80,000 deer on average, with an estimate of 79,000 in 2017. The Central Farmland Zone deer population has increased since 2008, and the 2017 post-hunt deer population estimate was 368,100. For a third year in a row, the 2017 post-hunt deer population estimate in the Southern Farmland Zone exceeded 250,000 deer.

Because of severe winter conditions (persistent, deep snow) in the Upper Peninsula, deer populations can

fluctuate dramatically from year to year. In 2016, the MI DNR finalized a new deer-management plan to address ecological, social, and regulatory shifts. An objective of this plan is to manage deer at the appropriate scale, considering impacts of deer on the landscape and on other species, in addition to population size (MI DNR 2016, p. 16). Additionally, the Michigan wolf-management plan addresses maintaining a sustainable population of wolf prey (MI DNR 2015, pp. 29–31). Short of a major, and unlikely, shift in deer-management and harvest strategies, there will be no shortage of prey for Wisconsin and Michigan wolves for the foreseeable future.

NRM DPS: Suitable Habitat

We refer the reader to our 2009 and 2012 final delisting rules (74 FR 15123, April 2, 2009; 77 FR 55530, September 10, 2012), which contain detailed analyses of suitable wolf habitat in the northern Rocky Mountains. A summary of those analyses is provided below.

The northern Rocky Mountains contain some of the best remaining suitable habitat for wolves in the Western United States (Carroll *et al.* 2006, figure 6). The region contains relatively large blocks of undeveloped public lands and some of the largest blocks of wilderness in the coterminous United States. Suitable wolf habitat in the region is characterized by public land with mountainous, forested habitat that contains abundant year-round wild ungulate populations, low road density, low numbers of domestic livestock that are only present seasonally, few domestic sheep, low agricultural use, and few people (Carroll *et al.* 2006, pp. 536–548; 2006, pp. 27–31; Oakleaf *et al.* 2006, pp. 555–558). Unsuitable wolf habitat is typically the opposite (*i.e.,* private land, flat open prairie or desert, low or seasonal wild ungulate populations, high road density, high numbers of year-round domestic livestock including many domestic sheep, high levels of agricultural use, and many people).

Based on a wolf habitat model (Oakleaf *et al.* 2006, pp. 555–559) that considered roads accessible to two-wheel and four-wheel drive vehicles, topography (slope and elevation), land ownership, relative ungulate density (based on State harvest statistics), cattle (*Bos* sp.) and sheep density, vegetation characteristics (ecoregions and land cover), and human density, there is an estimated 65,725 mi^2 (170,228 km^2) of suitable habitat in Montana, Idaho, and Wyoming. Generally, suitable habitat is located in western Montana west of I–15 and south of I–90; Idaho north of I–84; and northwest Wyoming (see figure 1 in 73 FR 63926, October 28, 2008). The current distribution of wolves in the northern Rocky Mountains generally mirrors Oakleaf *et al.*'s (2006, p. 559) prediction of suitable habitat, indicating that it is a reasonable approximation of where suitable habitat exists.

NRM DPS: Prey Availability

We refer the reader to our 2009 and 2012 final delisting rules (74 FR 15123, April 2, 2009; 77 FR 55530, September 10, 2012), which contain analyses of prey availability in the northern Rocky Mountains. A summary of those analyses, with updated information on ungulate numbers and references to ungulate management plans, is provided below.

Wild ungulate prey in the NRM is composed mainly of elk, but also includes deer, moose, and—in the Greater Yellowstone Area—bison. Bighorn sheep, mountain goats, and pronghorn antelope also are common but relatively unimportant as wolf prey. In total, State population estimates indicate that, in Idaho, there are approximately 100,000 elk (IDFG 2014d, p. 1), between 250,000 to 325,000 mule deer (IDFG 2019a, p. 1), and an unknown, but large, number of white-tailed deer (IDFG 2019b, entire); in Montana, there are approximately 134,000 elk (MFWP 2020a, p. 3), over 300,000 mule deer (MFWP 2020b, p. 1), and almost 200,000 white-tailed deer (MFWP 2020c, p. 1); and, in Yellowstone National Park, there are approximately 10,000–20,000 elk in summer, 4,000 elk in winter (NPS 2020a, entire), tens of thousands of elk outside of YNP in northwest Wyoming (WGFD 2019a, b, c, d, entire), 5,000 bison (NPS 2020b, entire), and an additional 396,000 mule deer in the State (Mule Deer Working Group 2018, p. 1). The States in the NRM have successfully managed resident ungulate populations for decades. Since we delisted the NRM, these States have continued to maintain relatively high densities of ungulate populations along with a large, well distributed, and recovered wolf population. State ungulate management plans commit them to maintaining ungulate populations at densities that will continue to support a recovered wolf population well into the foreseeable future (For examples of State ungulate management plans and adaptive harvest strategies, see IDFG 2014d, 2019a, 2019b, entire; MFWP 2001, 2014, entire).

West Coast States: Suitable Habitat

In Washington, wolves are expected to persist in habitats with similar characteristics to those identified by Oakleaf et al. (2006 in Wiles et al. 2011, p. 50) and as described above. Several modeling studies have estimated potentially suitable wolf habitat in Washington with most predicting suitable habitat in northeastern Washington, the Blue Mountains, the Cascade Mountains, and the Olympic Peninsula. Total area estimates in these studies range from approximately 16,900 mi^2 (43,770 km^2) to 41,500 mi^2 (107,485 km^2) (Wiles et al. 2011, pp. 51, 53; Maletzke et al. 2015, p. 3).

The Oregon Department of Fish and Wildlife (ODFW) developed a map of ''potential gray wolf range'' as part of its recent status review of wolves in Oregon (ODFW 2019, Appendix D). The model used predictors of wolf habitat including land-cover type, elk range, human population density, road density, and land types altered by humans; they chose to exclude public land ownership because wolves will use forested cover on both public and private lands (ODFW 2019, p. 147). Approximately 41,256 mi^2 (106,853 km^2) were identified as potential wolf range in Oregon. The resulting map coincides well with the current distribution of wolves in Oregon. The ODFW estimates that wolves occupy 31.6 percent of the potential wolf range in the east management zone (the majority of wolves here are under State management) and 2.7 percent of potential wolf range in the western management zone (all wolves here are under Federal management) (ODFW 2019, p. 153).

Habitat models developed for the northern Rocky Mountains (*e.g.,* Oakleaf et al. 2006, entire; Larsen and Ripple 2006, entire; Carroll et al. 2006, entire) may have limited applicability to California due to differences in geography, distribution of habitat types, distribution and abundance of prey, potential restrictions for movement, and human habitation (CDFW 2016b, pp. 154, 156). Despite these challenges, CDFW used these models to determine that wolves are most likely to occupy three general areas: (1) The Klamath Mountains and portions of the northern California Coast Ranges; (2) the southern Cascades, the Modoc Plateau, and Warner Mountains; and (3) the Sierra Nevada Mountain Range (CDFW 2016b, p. 20). These areas were identified as having a higher potential for wolf occupancy based on prey abundance, amount of public land ownership, and forest cover, whereas other areas were

less suitable due to human influences (CDFW 2016b, p. 156). Using a different approach and modeling technique, Nickel and Walther (2019, pp. 387–398) largely affirmed CDFW's conclusions regarding areas maintaining a high potential for wolf recolonization. As wolves continue to expand into California, models may be refined to better estimate habitat suitability and the potential for wolf occupancy.

West Coast States: Prey Availability

The Washington Department of Fish and Wildlife recently conducted a Wildlife Program 2015–2017 Ungulate Assessment to identify ungulate populations that are below management objectives or may be negatively affected by predators (WDFW 2016, entire). The assessment covers white-tailed deer, mule deer, black-tailed deer, Rocky Mountain elk, Roosevelt elk, bighorn sheep, and moose (WDFW 2016, p. 12). Washington defines an at-risk ungulate population as one that falls 25 percent below its population objective for 2 consecutive years and/or one in which the harvest decreases by 25 percent below the 10-year-average harvest rate for 2 consecutive years (WDFW 2016, p. 13). Based on available information, the 2016 report concludes that no ungulate populations in Washington were considered to be at-risk (WDFW 2016, p. 13).

In Oregon, 20 percent of Roosevelt elk populations are at or above management objectives; however, the populations within the western two-thirds of Oregon are generally stable (ODFW 2019, p. 66). Rocky Mountain elk are above management objectives in 63 percent of populations and are considered to be stable or increasing across the State (ODFW 2019, p. 66). Mule deer and black-tailed deer populations peaked in the mid-1900s and have since declined, likely due to human development, changes in land use, predation, and disease (ODFW 2019, p. 66). White-tailed deer populations, including Columbian white-tailed deer, are small, but are increasing in distribution and abundance (ODFW 2019, p. 69). In Oregon, deer are a secondary prey item when elk are present (ODFW 2019, pp. 57, 61).

In California, declines of historical ungulate populations were the result of overexploitation by humans dating back to the 19th century (CDFW 2016b, p. 147). However, elk distribution and abundance have increased due to implementation of harvest regulations, reintroduction efforts, and natural expansion (CDFW 2016b, p. 147). Mule deer also experienced overexploitation, but were also more likely subject to fluctuations in habitat suitability as a result of logging, burning, and grazing. Across the West, including California, mule deer populations have been declining since the late 1960s due to multiple factors including loss of habitat, drought, predation, and competition with livestock, but, as noted above, deer are a secondary prey when elk are present (CDFW 2016b, p. 147).

Central Rocky Mountains: Suitable Habitat

Models developed to assess habitat suitability and the probability of wolf occupancy indicate that Colorado contains adequate habitat to support a population of wolves, although the number of wolves the State could support is variable.—Based on mule deer and elk biomass, a pack size of between 5 and 10 wolves, and a reduction in available winter range due to increased snow depths, Bennett (1994, pp. 112, 275–280) estimated that the probable wolf population size in Colorado would range between 407 and 814 wolves. Carroll et al. (2003, entire) examined multiple models to evaluate suitable wolf habitat, occupancy, and the probability of wolf persistence given various landscape changes and potential increases in human density in the southern Rocky Mountains, which included portions of southeast Wyoming, Colorado, and northern New Mexico. Using a resource selection function (RSF) model developed for wolves in the Greater Yellowstone Ecosystem and projecting it to Colorado, Carroll et al. (2003, pp. 541–542) identified potential wolf habitat across north-central and northwest Colorado and also in the southwestern part of the State. RSF model predictions indicate that Colorado could support an estimated 1,305 wolves with nearly 87 percent of wolves occupying public lands in the State. Carroll et al. (2003, entire) also used a dynamic model that incorporated population viability analysis to evaluate wolf occupancy and persistence based on current conditions as well as potential changes resulting from increased road and human densities in the future. The dynamic model based on current conditions predicted similar distribution and wolf population estimates as the RSF model; however, as predicted, as road and human densities increased in Colorado, the availability of suitable habitat and the estimated number of wolves that habitat could support declined (Carroll et al. 2003, pp. 541–543).

An evaluation by Switalski et al. (2002, p. 9) indicated that the most likely avenues for dispersing wolves to enter Utah from Idaho and Wyoming were via the Bear River Range and Flaming Gorge National Recreation Area in the northern part of the State. A wolf habitat suitability model was developed for Utah to identify areas most likely to support wolf occupancy in the State (Switalski et al. 2002, pp. 11–15). The model evaluated five habitat characteristics that included estimates of prey abundance, estimates of road density, proximity to year-round water sources, elevation, and topography. Although the resulting model identified primarily forested and mountainous areas of Utah as suitable wolf habitat, an area over 13,900 mi^2 (36,000 km^2), it was highly fragmented as a result of high road densities. Nonetheless, six relatively large core areas of contiguous habitat were identified that ranged in size from approximately 127 mi^2 to 2,278 mi^2 (330 km^2 to 5,900 km^2) (Switalski et al. 2002, p. 13). Although these estimates should be considered maximums, it was estimated that the six core areas have the potential to support up to 214 wolves and the entirety of Utah could theoretically support over 700 wolves (Switalski et al. 2002, pp. 15–16). Without concerted efforts to minimize human-caused mortality and with low levels of immigration from neighboring populations, wolves recolonizing Utah would likely exist in small numbers and increase slowly, which could elevate local extinction risk (Switalski et al. 2002, p. 16).

An analysis similar to that of Carroll et al. (2003, entire) was conducted for the entirety of the Western United States and indicated that high-quality wolf habitat exists in Colorado and Utah, but that wolves recolonizing Colorado and Oregon would be most vulnerable to landscape changes because these areas lack, and are greater distances from, large core refugia (Carroll et al. 2006, pp. 33–36). The authors proposed that habitat improvements, primarily in the form of road removal or closures, could mitigate these effects (Carroll et al. 2006, p. 36). Switalski et al. (2002, pp. 12–13) and Carroll et al. (2003, p. 545) also cautioned that model predictions may be inaccurate because they did not account for the presence of livestock and the potential use of lethal removal to mitigate wolf conflicts, which may affect wolf persistence and distribution in some areas of Colorado and Utah.

Central Rocky Mountains: Prey Availability

Colorado Parks and Wildlife manages ungulate populations using Herd Management Plans which establish population objective minimums and maximums for each ungulate herd in the

State (Colorado Parks and Wildlife 2019, unpaginated). The Herd Management Plans consider both biological and social factors when setting herd objective ranges. All of the following information on ungulates is from the 2019 Colorado Parks and Wildlife ungulate summary report (Colorado Parks and Wildlife 2019, entire). Similar to other western States, mule deer in Colorado have declined due to a multitude of factors since the 1970s to a statewide population estimate of 433,100 animals in 2018, which was well below the minimum statewide population objective of 500,450. In 2018, of 54 mule deer herds in the State, 23 were below their population objective minimum with the western part of the State being the most affected. In contrast, elk populations in Colorado are stable with a winter population estimate of 287,000 elk in 2018. Although 22 of 42 elk herds are above the maximum population objective, the ratio of calves per 100 cows (a measure of overall herd fitness) has been on the decline in some southwestern herd units, and research has been initiated to determine potential causes. Moose are not native to Colorado, so to create hunting and wildlife viewing opportunities, Colorado Parks and Wildlife transplanted moose to the State beginning in 1978 and has since transplanted moose on four other occasions through 2010. In 2018, the moose population was estimated at 3,200 animals and continues to increase as moose expand into new areas of the State. In summary, while deer and elk numbers are down from their peak populations in some parts of Colorado, they still number in the hundreds of thousands of individuals, and the State is actively managing populations to meet objectives. In addition, as of the latest estimates, elk numbers exceed their population objectives in 22 of 42 herds (Colorado Parks and Wildlife 2019, p. 8). Introduced moose provide an additional potential food resource for wolves in some parts of the State.

The Utah Division of Wildlife Resources manages ungulate populations by establishing population objectives at the herd unit level and directing management efforts, primarily through public harvest, to achieve population goals for each herd unit. The summation of herd unit objectives can be considered a statewide objective for the species. Since a population decline during the winter of 1992–1993, mule deer populations in Utah have shown a generally increasing overall trend with a 2018 estimate of 372,500 animals in the State, an average increase of 1.6 percent annually (Utah Division of Wildlife Resources 2019, unpaginated). This estimate is 82 percent of the long-term statewide objective of 453,100 mule deer. The biggest threats to mule deer in Utah are habitat degradation and loss combined with unfavorable weather conditions (Utah Division of Wildlife Resources 2019, unpaginated). Elk populations in Utah have increased from an average of slightly over 60,000 from 1995 to 2005 to an average estimate of slightly over 80,000 between 2012 and 2017 (Bernales et al. 2018, pp. 104–105). The 2017 statewide elk population estimate was 80,955 elk, which is marginally higher than the population objective of 78,215 elk. Moose are relatively recent migrants to Utah, first being documented in the early 1900s. Since that time, moose have dispersed, or been transplanted, to occupy suitable habitats primarily in the north half of the State. In Utah, moose are susceptible to habitat limitations caused by increasing densities and, as a result, are proactively managed at appropriate densities to prevent population declines caused by habitat limitations due to high moose densities (Utah Division of Wildlife Resources 2017, unpaginated). Moose populations in Utah are estimated on a 3-year cycle, and as of 2016, an estimated 2,469 moose inhabited the State. Switalski et al. (2002, p. 18) suggested that a wolf population of 200 animals would not have a significant effect on ungulate populations in Utah; however, although the magnitude of effects would be difficult to predict, some local herd units may be disproportionately affected by wolves. In summary, deer and elk populations in Utah are increasing (Bernales et al. 2018, pp. 104–105; Utah Division of Wildlife Resources 2019, unpaginated), and habitat models estimate that the State is theoretically capable of supporting several hundred wolves if wolf-human conflicts can be addressed (Switalski et al. 2002, pp. 15–16).

Habitat and Prey Availability Summary

Sufficient suitable habitat exists in the Lower 48 United States to continue to support wolves into the future. Current land-use practices throughout the vast majority of the species' current range in the United States do not appear to be affecting the viability of wolves. We do not anticipate overall habitat changes will occur at a magnitude that would affect gray wolves across their range in the lower 48 United States, because wolves are broadly distributed in two large metapopulations and are able to withstand high levels of mortality due to their high reproductive capacity and vagility (the ability of an organism to move about freely and migrate) (Fuller *et al.* 2003, p. 163; Boitani 2003, pp. 328–330). Further, much of the area occupied by gray wolves occurs on public land where wolf conservation is a priority and conservation plans have been adopted to ensure continued wolf persistence (see Federal Lands discussion under Management in the NRM DPS and Post-delisting Management) (73 FR 10538, February 27, 2008).

Prey availability is an important factor in maintaining wolf populations. Native ungulates (*e.g.,* deer, elk, and moose) are the primary prey within the range of gray wolves in the lower 48 United States. Each State within wolf-occupied range manages its wild ungulate populations sustainably. States employ an adaptive-management approach that adjusts hunter harvest in response to changes in big game population numbers and trends when necessary, and predation is one of many factors considered when setting seasons. While we are aware of CWD as an emerging contagious disease threat to deer and elk, the ultimate impact of CWD and its prevalence across the landscape are still largely unknown. To address this emerging threat, States have developed robust surveillance and response plans for CWD to minimize and mitigate impacts.

Disease and Parasites

Although disease and parasites were not identified as a threat at the time of listing, a wide range of diseases and parasites has been reported for the gray wolf, and several of them have had temporary impacts during the recovery of the species in the lower 48 United States (Brand et al. 1995, p. 419; WI DNR 1999, p. 61, Kreeger 2003, pp. 202–214; Bryan et al. 2012, pp. 785–788; Stronen et al. 2011, entire). Although some diseases may be destructive to individuals, most of them seldom have long-term, population-level effects (Fuller et al. 2003, pp. 176–178; Kreeger 2003, pp. 202–214). All States that presently have wolf populations also have some sort of disease-monitoring program that may include direct observation of wolves to assess potential disease indicators or biological sample collection with subsequent analysis at a laboratory. Although Washington has not submitted biological samples for analysis, samples have been collected and laboratory analysis is planned for the future (Roussin 2018, pers. comm.). Also, in the central Rocky Mountain States, Colorado Parks and Wildlife adopted the recommendations of the Colorado Wolf Management Working

Group (see Post De-listing Management) to conduct basic monitoring and surveillance of wolf health via general assessments of captured wolves, necropsies performed on dead wolves, and analysis of biological samples (Colorado Wolf Management Working Group 2004, p. 37). The Utah Division of Wildlife Resources developed guidelines to ensure the proper collection and preservation of biological samples, which can be used to assess overall wolf health, disease, and parasite loads (UDWR 2020, pers comm).

Canine parvovirus (CPV) infects wolves, domestic dogs (*Canis familiaris*), foxes (*Vulpes vulpes*), coyotes, skunks (*Mephitis mephitis*), and raccoons (*Procyon lotor*). Canine parvovirus has been detected in nearly every wolf population in North America including Alaska (Bailey et al. 1995, p. 441; Brand et al. 1995, p. 421; Kreeger 2003, pp. 210–211; Johnson et al. 1994, pp. 270–272; ODFW 2014, p. 7), and exposure in wolves is thought to be almost universal. Nearly 100 percent of the wolves handled in Montana (Atkinson 2006, pp. 3–4), Yellowstone National Park (Smith and Almberg 2007, p. 18), Minnesota (Mech and Goyal 1993, p. 331), and Oregon (ODFW 2017, p. 8) had blood antibodies indicating nonlethal exposure to CPV. Clinical CPV is characterized by severe hemorrhagic diarrhea and vomiting, which leads to dehydration, electrolyte imbalances, debility, and shock and may eventually lead to death.

Based on data collected 1973–2004 in northeastern Minnesota, Mech et al. (2008, p. 824) concluded that CPV reduced pup survival, subsequent dispersal, and the overall rate of population growth of wolves in Minnesota (a population near carrying capacity in suitable habitat). After the CPV became endemic in the population (around 1979), the population developed immunity and was able to withstand severe effects from the disease (Mech and Goyal 1993, pp. 331–332). These observed effects are consistent with results from studies in smaller, isolated populations in Wisconsin and on Isle Royale, Michigan (Wydeven et al. 1995, entire; Peterson et al. 1998, entire), but indicate that CPV also had only a temporary effect in a larger population.

Canine distemper virus (CDV) is an acute disease of carnivores that has been known in Europe since the sixteenth century and infects canids worldwide (Kreeger 2003, p. 209). This disease generally infects pups when they are only a few months old, so mortality in wild wolf populations might be difficult to detect (Brand et al. 1995, pp. 420–421). There have been few documented cases of mortality from CDV among wild wolves; for example, it has been documented in two littermate pups in Manitoba (Carbyn 1982, pp. 111–112), in two Alaskan yearling wolves (Peterson et al. 1984, p. 31), in seven Wisconsin wolves (five adults and two pups) (Thomas in litt. 2006; Wydeven and Wiedenhoeft 2003, p. 20; Wiedenhoeft et al. 2018, p. 5), and in at least two wolves in Michigan (Beyer 2019, pers. comm.). Carbyn (1982, pp. 113–116) concluded that CDV was partially responsible for a 50-percent decline in the wolf population in Riding Mountain National Park (Manitoba, Canada) in the mid-1970s. Studies in Yellowstone National Park have shown that CDV outbreaks can contribute to short-term population effects through significantly reduced pup survivorship, though these effects may be offset by other factors influencing reproductive success (Almberg et al. 2009, p. 5; Almberg et al. 2012, p. 2848; Stahler et al. 2013, pp. 227–229). Serological evidence indicates that exposure to CDV is high among some wolf populations—29 percent in northern Wisconsin and 79 percent in central Wisconsin from 2002 to 2003 (Wydeven and Wiedenhoeft 2003, pp. 23–24, table 7) and 2004 (Wydeven and Wiedenhoeft 2004, pp. 23–24, table 7), and similar levels in Yellowstone National Park (Smith and Almberg 2007, p. 18). Exposure to CDV was first documented in Oregon in 2016 (n=3; ODFW 2017, p. 8), but no mortalities or clinical signs of the disease were observed. The continued strong recruitment in Wisconsin and elsewhere in North American wolf populations, however, indicates that while distemper may cause population-level decreases in the short term, it is not likely a significant cause of mortality over longer periods (Almberg et al. 2009, p. 9; Brand et al. 1995, p. 421).

Lyme disease, caused by a spirochete bacterium, is spread primarily by deer ticks (*Ixodes dammini*). Host species include humans, horses (*Equus caballus*), dogs, white-tailed deer, mule deer, elk, white-footed mice (*Peromyscus leucopus*), eastern chipmunks (*Tamias striatus*), coyotes, and wolves. A study of wolves in Wisconsin found exposure to Lyme disease in 65.6 percent of individuals, with exposure increasing during the period from 1985 to 2011 (Jara et al. 2016, pp. 5–9). Clinical symptoms have not been reported in wolves, but based on impacts seen in other mammals, individuals can likely experience debilitating conditions, perhaps contributing to their mortality; however, Lyme disease is not considered to be a significant factor affecting wolf populations (Kreeger 2003, p. 212; Jara et al. 2016, p. 13).

Mange has been detected in wolves throughout North America (Brand et al. 1995, pp. 427–428; Kreeger 2003, pp. 207–208). Mange mites (*Sarcoptes scabeii*) infest the skin of the host, causing irritation due to feeding and burrowing activities. This causes intense itching that results in scratching and hair loss. Mortality may occur due to exposure, primarily in cold weather, emaciation, or secondary infections (Almberg et al. 2012, pp. 2842, 2848; Knowles et al. 2017, entire; Kreeger 2003, pp. 207–208). Mange mites are spread from an infected individual through direct contact with others or through the use of common areas. In a long-term Alberta wolf study, higher wolf densities were correlated with increased incidence of mange, and pup survival decreased as the incidence of mange increased (Brand et al. 1995, pp. 427–428). Mange has been shown to temporarily affect wolf population growth-rates in some areas (Kreeger 2003, p. 208), but not others (Wydeven et al. 2009b, pp. 96–97). In Montana and Wyoming, the percentage of packs with mange fluctuated between 3 and 24 percent annually from 2003 to 2008 (Jimenez et al. 2010, pp. 331–332; Atkinson 2006, p. 5; Smith and Almberg 2007, p. 19). In packs with the most severe infestations, pup survival appeared low, and some adults died (Jimenez et al. 2010, pp. 331–332); however, evidence indicates infestations do not normally become chronic because wolves often naturally overcome them.

Dog-biting lice (*Trichodectes canis*) commonly feed on domestic dogs, but can infest coyotes and wolves (Schwartz et al. 1983, p. 372; Mech et al. 1985, p. 404). The lice can attain severe infestation levels, particularly in pups. The worst infestations can result in severe scratching, irritated and raw skin, substantial hair loss particularly in the groin, and poor condition. While no wolf mortality has been confirmed, death from exposure and/or secondary infection following self-inflicted trauma caused by inflammation and itching may be possible. Dog-biting lice were confirmed on two wolves in Montana in 2005, on a wolf in south-central Idaho in early 2006 (USFWS et al. 2006, p. 15; Atkinson 2006, p. 5; Jimenez et al. 2010, pp. 331–332), and in 4 percent of Minnesota wolves in 2003 through 2005 (Paul in litt. 2005), but their infestations were not severe. Dog-biting lice

infestations are not expected to have a significant impact even at a local scale.

Other diseases and parasites, including rabies, canine heartworm, blastomycosis, bacterial myocarditis, granulomatous pneumonia, brucellosis, leptospirosis, bovine tuberculosis, hookworm, coccidiosis, canine hepatitis, canine adenovirus-1, canine herpesvirus, anaplasmosis, ehrlichiosis, echinococcus granulosus, and oral papillomatosis have been documented in wild wolves, but their impacts on future wild wolf populations are not likely to be significant (Almberg et al. 2009, p. 4; Almberg et al. 2012, pp. 2847, 2849; Brand et al. 1995, pp. 419–429; Bryan et al. 2012, pp. 785–788; Hassett in litt. 2003; Jara et al. 2016, p. 13; Johnson 1995, pp. 431, 436–438; Knowles et al. 2017, entire; Mech and Kurtz 1999, pp. 305–306; Thomas in litt. 1998, Thomas in litt. 2006, WI DNR 1999, p. 61; Foreyt et al. 2009, p. 1208; Kreeger 2003, pp. 202–214).

Genetic Diversity and Inbreeding

There were no genetic concerns for the gray wolf identified at the time of listing. Improved genetic techniques since then have vastly improved our understanding of population genetics and the potential consequences of range and population contraction and expansion. For example, research has firmly established that genetic issues such as inbreeding depression can be a significant concern in small wild populations, with potentially serious implications for population viability (Frankham 2010, entire). Inbreeding is caused by the mating of close relatives and can result in increased prevalence or expression of deleterious mutations within a population, leading to various negative effects on fitness, referred to as inbreeding depression (see Robinson et al. 2019, entire, and references therein).

Inbreeding depression, as evidenced by physiological anomalies or other effects on fitness, has been documented in wild wolf populations, including Scandinavian wolves (Vila et al. 2003, entire; Raikkonen et al. 2013, entire; Akesson et al. 2016, p. 4746), Mexican wolves (Asa et al. 2007, entire; Fredrickson et al. 2007, entire; Robinson et al. 2019, entire), and Isle Royale wolves (Hedrick et al. 2019, entire; Robinson et al. 2019, entire). In each of these cases, the population size or number of founders was very small, and the population was completely or nearly completely isolated over several generations.

Although inbreeding depression has been documented in wolves, there are signs that wolves are adept at avoiding inbreeding when possible (vonHoldt et al. 2008, entire). Reintroduced and naturally expanding populations in the northern Rocky Mountains showed low levels of inbreeding even in the Yellowstone and Idaho populations, which were begun with a limited number of founders (vonHoldt et al. 2008, entire; vonHoldt et al. 2010, pp. 4416–4417). Moreover, in both the Scandinavian wolves and Mexican wolves, many of the effects of inbreeding depression were mitigated by relatively small influxes of additional wolves (*i.e.,* new genetic material) into the population (Vila et al. 2003, entire; Fredrickson et al. 2007, entire; vonHoldt et al. 2008, p. 262; vonHoldt et al. 2010, p. 4421; Akesson et al. 2016, entire; Wayne and Hedrick 2011, entire). Harding et al. (2016, p. 154), in an examination of recovery goals for Mexican wolves, provides a list of wolf populations that experienced notably low numbers but later recovered and are increasing or stable.

Aside from the unique situation on Isle Royale, where infrequent migrations to the island appear to have been too limited to reduce the effects of inbreeding depression (Hedrick et al. 2014, entire; Hedrick et al. 2019, entire), we are not aware of any instances of inbreeding or inbreeding depression within the lower 48 United States, though there are indications that inbreeding may have occurred during the course of recovery in the Great Lakes area (Fain et al. 2010, p. 1760). Although Leonard et al. (2005, entire) examined historical genetic diversity and concluded that a significant amount has likely been lost, current populations have high levels of genetic diversity in the Great Lakes area (Koblmüller 2009, p. 2322; Fain et al. 2010, p. 1758; Gomez-Sanchez et al. 2018, p. 3602), including an analysis of samples from Minnesota that indicated large effective population sizes [4] over a long period (Robinson et al. 2019. p. 2). In fact, likely due to connectivity with wolves in Canada, there is no evidence of a population bottleneck in Minnesota. Instead, the range reduction and subsequent expansion seems to more accurately resemble contraction of a larger range rather than an isolated bottleneck (Koblmüller et al. 2009, p. 2322; Rick et al. 2017, p. 1101). Similarly, wolves in Washington, Oregon, and California can trace most of their ancestry to populations in the northern Rocky Mountains that have been shown to have high genetic diversity, low levels of inbreeding, and connectivity with the large Canadian wolf population to the north (Forbes and Boyd 1996, entire; Gomez-Sanchez et al. 2018, p. 3602; vonHoldt et al. 2008, entire; vonHoldt et al. 2010, entire).

An important factor for maintaining genetic diversity can be connectivity or effective dispersal between populations or subpopulations (Raikonnen et al. 2013, entire; Wayne and Hedrick 2011, entire). As noted in the final delisting rule for the northern Rocky Mountains, connectivity was an important factor in ensuring the long-term viability of that metapopulation (74 FR 15123, April 2, 2009). Similarly, the potential lack of connectivity between Wyoming's population and the rest of the metapopulation in the northern Rocky Mountains was noted as a concern in the subsequent delisting rule for Wyoming (77 FR 55530, September 10, 2012). To address those concerns, Idaho and Montana each signed a Memorandum of Understanding (MOU) with the Service that committed to monitoring and managing the population to ensure sufficient connectivity (Groen et al. 2008, entire). Wyoming signed a nearly identical MOU in 2012, prior to the final rule delisting wolves there (Talbott and Guertin 2012, entire). With each MOU, a range of management options, up to and including translocation of individual wolves, was made available to address any noted deficiencies in effective dispersal, thereby mitigating concerns of negative genetic effects due to delisting those wolves. Such measures have not been necessary since the MOUs were signed, and are unlikely to become necessary in the future, as natural dispersal within the metapopulation has been and is expected to remain sufficient.

Connectivity has been investigated in other parts of the species' range as well. In the Great Lakes area, dispersal and interbreeding appears to be occurring both among Minnesota, Wisconsin, and Michigan and also between these States and the population in Canada (Fain et al. 2010, p. 1758; Wheeldon et al. 2010, p. 4438). In the West Coast States, wolves have dispersed from Montana, Idaho, and the Greater Yellowstone area to form packs in Oregon and Washington (Jimenez et al. 2017, entire; Hendricks et al. 2018, entire), while individuals from Oregon and Washington have dispersed both within and across their respective State borders as well as to California, other northern Rocky Mountains States, and Canada to join existing packs or to find a mate and

[4] Effective population size is the size of an idealized, randomly mating population that experiences genetic drift, or the random loss of alleles, at the same rate as the population of interest.

form a new pack (USFWS 2020, pp. 16–18). In addition, the presence of admixed coastal/northern Rocky Mountain individuals in Washington indicates that coastal wolves or their admixed progeny have dispersed successfully from Canada into the State (Hendricks et al. 2018, entire) and are living in Washington's interior.

Delisting the gray wolf in the lower 48 United States may have the effect of reducing connectivity among the more central areas of the large metapopulations in the Great Lakes area or the Western United States and more peripheral areas in those or other States. Such a reduction might be caused by increased mortality of dispersing individuals (Smith et al. 2010, p. 627) or of individuals in established packs on the periphery of occupied range (O'Neil et al. 2017b, p. 9525; Stenglein et al. 2018, pp. 104–106; Mech et al. 2019, pp. 62–63) and could result in decreased genetic diversity and increased likelihood of inbreeding in those peripheral packs if they become isolated. Rick et al. (2017, entire) examined genetic diversity and structuring in Minnesota prior and then following a year of harvest during the period when wolves were delisted in the State. The results showed no difference in genetic diversity, a slight increase in large-scale genetic structuring, and some differences in the geography of effective dispersal. Because the study contained only 2 years of data, however, it is difficult to draw conclusions about long-term effects or to discern the cause or causes of the observed differences.

We acknowledge that some level of genetic effects to wolf populations is likely to occur following delisting and may include changes in genetic diversity or population structuring (Allendorf et al. 2008, entire). These changes, however, are not likely to be of such a magnitude that they pose a significant threat to the species. Available evidence indicates that continued dispersal, even at a lower rate, within and among areas of the lower 48 United States should be adequate to maintain sufficient genetic diversity for continued viability. Increased effects to smaller, peripheral populations are certainly possible as wolves continue to disperse and recolonize areas within their historical range, but evidence of inbreeding avoidance (vonHoldt et al. 2008, entire) and the demonstrated benefits of even relatively low numbers of effective dispersers (Wayne and Hedrick 2011, entire; Vila et al. 2003, entire; Akesson et al. 2016, entire) indicate that instances of inbreeding depression would not likely be widespread or impact the larger population. The maintenance of genetic diversity could also be enhanced in core populations due to moderate increases in human-caused mortality that results in more social openings being created and filled by dispersing individuals. Moreover, the genetic isolation of peripheral packs or individual wolves is not likely to impact the larger metapopulations from which those individuals originated. Management plans in place in States in the Great Lakes area, for example, will likely ensure that connectivity within those areas remains sufficiently high to avoid potential genetic impacts.

Effects of Climate Change

Effects of climate change were not identified as threats at the time of listing. There is research indicating that climate change could affect gray wolves through impacts to prey species (Hendricks et al. 2018, unpaginated; Weiskopf et al. 2019, entire) or increased exposure to diseases such as Lyme disease (Jara et al. 2016, p. 13), but the best available information does not indicate that climate change is causing negative effects to the viability of the gray wolf in the lower 48 United States, or that it is likely to do so in the future.

Vulnerability to climate change is often gauged by factors such as physiological tolerance, habitat specificity, and adaptive capacity, which includes dispersal capability (Dawson et al. 2011, p. 53). Throughout their circumpolar distribution, gray wolves persist in a variety of ecosystems with temperatures ranging from −70 °F to 120 °F (−57 °C to 49 °C) (Mech and Boitani 2003, p. xv). Gray wolves are highly adaptable animals and are efficient at exploiting food resources available to them. Although Weiskopf et al. (2019, entire) noted that the ungulate community in the Great Lakes area may shift as moose decline and deer increase due to climate change, there is no indication that prey would become limiting for wolves. In assessing climate change impacts to wildlife in the northern Rocky Mountains, McKelvey and Buotte (2018, p. 360) note that wolves, because of their generalist, adaptable life history, are not likely to be strongly affected by climate. Despite the likelihood of wolves being exposed to the effects of climate change, due to their life history and plasticity or adaptability, we do not expect that gray wolves will be negatively impacted. For a full discussion of potential impacts of climate change on wolves, see the final delisting rule for the gray wolf in Wyoming (77 FR 55597–55598, September 10, 2012). The best available information does not indicate that any research conducted since the 2012 rule significantly changes that analysis.

Cumulative Effects

When threats occur together, one may exacerbate the effects of another, causing effects not accounted for when threats are analyzed individually. Many of the threats to the gray wolf in the lower 48 United States and gray wolf habitat discussed above are interrelated and could be synergistic, and thus may cumulatively affect the gray wolf in the lower 48 United States beyond the extent of each individual threat. For example, a decline in available wild prey could cause wolves to prey on more livestock, resulting in a potential increase in human-caused mortality. However, although the types, magnitude, or extent of cumulative impacts are difficult to predict, the best available information does not demonstrate that cumulative effects are occurring at a level sufficient to negatively affect gray wolf populations within the lower 48 United States. We anticipate that the threats described above will be sufficiently addressed through ongoing management measures that are expected to continue post-delisting and into the future. The best scientific and commercial data available indicate that the vast majority of gray wolves occur within one of two widespread, large, and resilient metapopulations and that threat factors—either individually or cumulatively—are not currently resulting, nor are they anticipated to result, in reductions in gray wolf numbers or habitat at a level sufficient to significantly affect gray wolf populations within the lower 48 United States.

Ongoing and Post-Delisting State, Tribal, and Federal Wolf Management

In addition to considering threats to the species, our analysis of a species status under section 4 of the Act must also account for those efforts made by States, Tribes, or others to protect the species. Evaluating these efforts is particularly important for the gray wolf because the primary threat to their viability is unregulated human-caused mortality. States, Tribes, and Federal land management agencies have extensive authorities to regulate human-caused mortality of wolves. Below, we evaluate ongoing State, Tribal, and Federal management of wolves in the recovered NRM DPS, as well as anticipated State, Tribal, and Federal management of wolves that we are delisting in this final rule. Due to recent

information confirming the presence of a group of six wolves in extreme northwest Colorado, and their proximity to and potential use of habitats within Utah, we include evaluations of the Colorado Wolf Management Recommendations and the Utah Wolf Management Plan.

Management in the NRM DPS

As part of both the 2009 and 2012 delisting rules (74 FR 15123, April 2, 2009; 77 FR 55530, September 10, 2012), the Service determined that the States of Idaho, Montana, and Wyoming had laws, regulations, and management plans in place that met the requirements of the Act to maintain their respective wolf populations within the NRM DPS above recovery levels into the foreseeable future. Similarly, Tribal and Federal agency plans were also determined to contribute to the recovery of the gray wolf in those States. In this section we provide a brief summary of past and present management of gray wolves in the NRM States of Idaho, Montana, and Wyoming. We also include relevant updates to Tribal plans that apply exclusively to the eastern one-third of both Washington and Oregon, areas previously delisted due to recovery. Other State and Federal management that applies statewide in Washington and Oregon is included in the *Post-delisting Management* section of this final rule. Specific information on regulated harvest and other sources of human-caused mortality are described in the *Human-Caused Mortality* section of this final rule.

State Management

Before the delisting of wolves in the NRM DPS, it was long recognized that the future conservation of a delisted wolf population in the NRM depended almost solely on State regulation of human-caused mortality. In 1999, the Governors of Idaho, Montana, and Wyoming agreed that regional coordination in wolf management planning among the States, Tribes, and other jurisdictions was necessary. They signed a memorandum of understanding (MOU) to facilitate cooperation among the three States to develop adequate State wolf management plans so that delisting could proceed. In this agreement, which was renewed in April 2002, all three States committed to maintain at least 10 breeding pairs and 100 wolves per State.

In 2009, the Service determined that Idaho and Montana had State laws, management plans, and regulations that met the requirements of the Act to maintain their respective wolf populations within the NRM DPS above recovery levels into the foreseeable future (74 FR 15123, April 2, 2009). A similar determination was made for Wyoming in 2012 (77 FR 55530, September 10, 2012). The three States agreed to manage above the recovery level, and to adapt their management strategies and adjust allowable rates of human-caused mortality should the population be reduced to near recovery levels per their management objectives. State management has maintained wolf numbers well above minimal recovery levels and, combined with wolves' reproductive and dispersal capabilities, has maintained the recovered status of the NRM DPS. The State laws and management plans balance the level of wolf mortality, primarily human-caused mortality, with the wolf population growth rate to achieve desired population objectives. Management by the NRM States maintains a robust wolf population in each core recovery area because they each contain manmade or natural refugia from human-caused mortality (*e.g.,* National Parks, wilderness areas, and remote Federal lands) that guarantee those areas remain the stronghold for wolf breeding pairs and source of dispersing wolves in each State. Similarly, State ungulate management plans provide a commitment to maintain ungulate populations at densities that will continue to support a recovered wolf population, as well as recreational opportunities for the public, well into the future.

Idaho—Wolves in Idaho are managed under the 2002 Idaho Wolf Conservation and Management Plan (IWCMP; Idaho Wolf Legislative Wolf Oversight Committee 2002, entire). The gray wolf was classified as endangered by the State until March 2005, when the Idaho Fish and Game Commission (IDFG Commission) reclassified the gray wolf as a big game animal (74 FR 15168, April 2, 2009). Hunting and trapping are both legal means of taking gray wolves throughout Idaho (IDFG 2017, p. 4). The IWCMP states that wolves will be protected against illegal take as a big game animal in Idaho (Idaho Wolf Legislative Wolf Oversight Committee 2002, p. 19).

Under the IWCMP, IDFG is the primary manager of wolves, and as such, will maintain a minimum of 15 packs of wolves to maintain a margin of safety over the Service's minimum recovery target of 10 breeding pairs and 100 wolves. IDFG is committed to managing wolves as a native species in the State to maintain a viable self-sustaining population that will not require relisting under the Act. Public harvest is used as a management tool when there are 15 or more packs in Idaho to help mitigate conflicts with livestock producers or big game populations.

The IDFG manages both ungulates and carnivores, including wolves, to maintain viable populations of each. Ungulate harvest focuses on maintaining sufficient prey populations to sustain quality hunting and healthy, viable wolf and other carnivore populations. In addition, the Mule Deer Initiative and the Clearwater Elk Initiative were implemented in the mid-2000s to improve populations of both species. These improvements provide benefits to carnivores and hunters.

Idaho's regulatory framework of State laws, wolf management plans, and implementing regulations maintains the wolf population well above recovery minimums, assuring maintenance of the State's numerical and distributional share of a recovered NRM wolf population well into the future.

Montana—In Montana, statutes and administrative rules categorize the gray wolf as a ''Species in Need of Management'' under the Montana Nongame and Endangered Species Conservation Act of 1973 (MCA 87–5–101 to 87–5–123). Classification as a ''Species in Need of Management'' and the associated administrative rules under Montana State law create the legal mechanism to protect wolves and regulate human-caused mortality (including regulated public harvest) beyond the immediate defense of life/property situations. Illegal human-caused mortality is prosecuted under State law and regulations issued by Montana's Fish, Wildlife, and Parks (MFWP) Commission. At present, the MFWP Commission evaluates wolf hunting regulations every other year to allow for discussion of ungulate and wolf seasons at the same Commission meeting (see Human-Caused Mortality section of this final rule).

In August 2003, MFWP completed a Final EIS pursuant to the Montana Environmental Policy Act and recommended that the Updated Advisory Council alternative be selected as Montana's Final Gray Wolf Conservation and Management Plan (MFWP 2003, entire). The Record of Decision (ROD) was amended in 2004, to select the ''Contingency'' alternative to allow flexibility while wolves were still federally listed and to provide a transition to State management upon Federal delisting (MFWP 2004, entire).

Under the management plan, the wolf population is maintained above the recovery level of 10 breeding pairs and 100 wolves by managing for at least 15 breeding pairs and 150 wolves. Wolves

are not deliberately confined to any specific geographic areas of Montana, nor is the population size deliberately capped at a specific level. However, wolf numbers and distribution are managed adaptively based on ecological factors, wolf population status, conflict mitigation, and social tolerance. The plan and Administrative Rules commit MFWP to implement its management framework in a manner that encourages connectivity among resident wolves in Montana as well as wolf populations in Canada, Idaho, and Wyoming to maintain metapopulation structure in the NRM. Overall, wolf management includes population monitoring, routine analysis of population health, management in concert with prey populations, law enforcement, control of domestic animal/human conflicts, implementation of a wolf-damage mitigation and reimbursement program, research, information dissemination, and public outreach.

The MFWP has and will continue to manage wild ungulates according to Commission-approved policy direction and species management plans. MFWP strives to manage ungulates in a way that continues to provide for recreational hunting opportunities yet maintains sufficient prey to support the full suite of large carnivores in the State including a recovered wolf population.

The Montana wolf plan and regulatory framework is designed to maintain a recovered wolf population and minimize conflicts with other traditional activities in Montana's landscape. Montana continues to implement the commitments it has made in its current laws, regulations, and wolf plan to provide the necessary regulatory mechanisms to assure maintenance of the State's numerical and distributional share of a recovered NRM wolf population well into the future.

Wyoming—The Wyoming Game and Fish Department (WGFD) and Wyoming Game and Fish Commission (WGFC) manage wolves under the 2011 Wyoming Gray Wolf Management Plan (WGFC 2011, entire), as amended in 2012 (WGFC 2012, entire). Under this plan, wolves in the northwestern portion of the State are managed as trophy game animals year-round in the Wolf Trophy Game Management Area (WTGMA), which encompasses approximately 15,000 mi^2 (38,500 km^2). Wolves are designated as predatory animals in the remainder of the State.

Wolf harvest in the WTGMA is regulated by WGFC Chapter 47 regulations. Because wolf management in northwest Wyoming falls under different Federal, State, and Tribal jurisdictions, the Service agreed to allow WGFD to maintain a minimum of 10 breeding pairs and 100 wolves within the WTGMA. Yellowstone National Park (YNP) and the Wind River Indian Reservation combined would maintain at least 5 breeding pairs and 50 wolves, so that the totality of Wyoming's wolf population is managed at or above 15 breeding pairs and 150 wolves (which provides the buffer above the 10 breeding pair and 100 wolf recovery level). Further, Wyoming wolf management regulations commit to the management of wolves so that genetic diversity and connectivity issues do not threaten the population. To accomplish this, WGFC Chapter 21 regulations provide for a seasonal expansion of the WTGMA from October 15 through the end of February to facilitate natural dispersal of wolves between Wyoming and Idaho (WGFC 2011, figure 1, pp. 2, 8, 52).

Wolves that are classified as predators are regulated by the Wyoming Department of Agriculture under title 11, chapter 6 of the Wyoming Statutes. Under this statute, wolves may be taken year-round by any legal means without a license, but any harvest must be reported to WGFD within 10 days of take. As we have previously concluded (73 FR 10514, February 27, 2008; 74 FR 15123, April 2, 2009; 77 FR 55530, September 10, 2012), wolf packs are unlikely to persist in portions of Wyoming where they are designated as predatory animals. However, the WTGMA is large enough to support Wyoming's management goals and a recovered wolf population.

To ensure the goal of at least 10 breeding pairs and at least 100 individuals in the area directly under State management is not inadvertently compromised, Wyoming maintains an adequate buffer above minimum population objectives. A large portion of Wyoming's wolf population exists in areas outside the State's control (*e.g.,* YNP and the Wind River Indian Reservation). The wolf populations in YNP and the Wind River Indian Reservation further buffer the population above the minimum recovery goal, ensuring the State meets the required management level of 15 breeding pairs and 150 wolves.

The Wyoming wolf plan is used by WGFD and WGFC in setting annual hunting quotas and limiting controllable sources of mortality (see Human-Caused Mortality section). Wyoming's regulatory framework, including the wolf plan, State statutes, and regulations, assures maintenance of the State's numerical and distributional share of a recovered NRM wolf population well into the future.

Tribal Management and Conservation of Wolves

In the NRM DPS, there are approximately 20 Tribes and about 12,719 mi^2 (32,942 km^2) (3 percent) of the area is Tribal land. Of the Tribes within the NRM DPS, the Wind River, Blackfeet, Flathead, and The Confederated Tribes of the Colville Indian Reservations have wolf management plans. Currently, a small number of wolf packs have their entire territories on Tribal lands in the NRM DPS. While Tribal lands provide habitat for wolf packs in the NRM, these lands represent a small proportion of the overall recovered wolf population in the NRM DPS. However, Tribes have various treaty rights, such as wildlife harvest, in areas of public land where many wolf packs live. The NRM States agreed to incorporate Tribal harvest into their assessment of the potential surplus of wolves available for public harvest in each State, each year, to ensure that the wolf population is maintained above recovery levels. The exercise of Tribal treaty rights to harvest wolves does not significantly impact the wolf population or reduce it below recovery levels due to the small portion of the wolf population that could be affected by Tribal harvest or Tribal harvest rights. Specific information on regulated harvest and other sources of human-caused mortality on Tribal lands are described in the Human-Caused Mortality section of this final rule. Below we describe past and present management of gray wolves on Tribal lands in the NRM States of Idaho, Montana, and Wyoming. We also include relevant updates to Tribal plans that apply exclusively to the eastern one-third of both Washington and Oregon, areas previously delisted due to recovery.

Wind River Indian Reservation—The Wind River Indian Reservation (WRR) typically contains a small number of wolves relative to the remainder of Wyoming (approximately 10–20 wolves annually for the past 10 years). The WRR adopted a wolf management plan in 2007 (Eastern Shoshone and Northern Arapaho Tribes, 2007, entire) and updated it in 2008 (Eastern Shoshone and Northern Arapaho Tribes, 2008, entire). Wolves are managed as game animals on the Wind River Indian Reservation (Eastern Shoshone and Northern Arapaho Tribes 2008, pp. 3, 9). The Eastern Shoshone and Northern Arapaho Tribes govern this area and the Shoshone and Arapaho Tribal Fish and Game Department manage wildlife on

the WRR with assistance from the Service's Fish and Wildlife Conservation Office in Lander, Wyoming.

Wyoming claims management authority of non-Indian fee title lands and on Bureau of Reclamation lands within the external boundaries of the WRR. Thus, wolves are classified as game animals within about 80 percent of the reservation and as predators on the remaining 20 percent (Hnilicka in litt. 2020). To date, predator status has had minimal impact on wolf management and abundance on the WRR because these inholdings tend to be concentrated on the eastern side of the reservation in habitats that are less suitable for wolves (Eastern Shoshone and Northern Arapaho Tribes 2008, p. 5, figure 1).

Under the plan, any enrolled member can shoot a wolf in the act of attacking livestock or dogs on Tribal land, provided the enrolled member supplies evidence of livestock or dogs recently (less than 24 hours) wounded, harassed, molested, or killed by wolves, and a designated agent is able to confirm that the livestock or dogs were wounded, harassed, molested, or killed by wolves (Eastern Shoshone and Northern Arapaho Tribes 2008, p. 8). The plan also allows the Tribal government to remove ''wolves of concern'' defined as wolves that attack livestock, dogs, or livestock herding and guarding animals once in a calendar year or any domestic animal twice in a calendar year (Eastern Shoshone and Northern Arapaho Tribes 2008, p. 8).

As described above, the WRR alone is not considered essential to maintaining a recovered wolf population in Wyoming, but through cooperative management among the tribes, WGFD, and YNP, the goal is to continue to maintain a recovered wolf population into the future.

Blackfeet Indian Reservation—Wolves on the Blackfeet Indian Reservation exist on the Reservation's western boundary, which has a high predicted probability of use (MFWP 2019b, p. 8). The Blackfeet Tribe Wolf Management Plan was finalized in 2008 (BTBC 2008, entire). Wolves on the Blackfeet Reservation are classified as big game animals and are managed by Blackfeet Fish and Wildlife Department similar to other wildlife species on the reservation (BTBC 2008, p. 4). The plan does not specify maximum or minimum population sizes. Rather it is driven by wolf behavior and the level of conflict. The goal of the plan is to manage wolves on the Blackfeet Reservation in Montana to provide for their long-term persistence. This is accomplished by minimizing wolf-human conflict while incorporating cultural values and beliefs (BTBC 2008, p. 3). For example, low levels of conflict with a high wolf population will be tolerated without resulting in efforts to reduce the wolf population (BTBC 2008, p. 4). Lethal control may be used for wolves that repeatedly kill livestock (BTBC 2008, pp. 4–5).

The objectives of the plan are: (1) Provide training for Tribal game wardens and Blackfeet Fish and Wildlife Department personnel; (2) incorporate culture and traditions into wolf management; (3) educate Blackfeet Reservation residents on wolf biology, ecology, and management; (4) investigate and resolve wolf-human conflicts; (5) report and record wolf-human conflicts; (6) mitigate losses associated with wolf activity; (7) conduct effective monitoring of the wolf plan and revise as needed; and (8) collect wolf population status and health information (BTBC 2008, pp. 3–4). These objectives appear to be consistent with the goal of the plan for long-term persistence of wolves on the Blackfeet Reservation.

Flathead Indian Reservation—The Confederated Salish and Kootenai Tribes Tribal Wildlife Management Program finalized a wolf management plan for the Flathead Indian Reservation in western Montana in 2015 (CSKT 2015, entire). Wolf activity on the reservation is concentrated in the western half and southern boundary (CSKT 2015, p. 7), with at least three packs using portions of the reservation. These wolves are included in totals reported in Montana's annual reports. The management of wolves is coordinated with State and Federal agencies with the goal of long-term persistence of wolves in Montana and preventing the need for Federal relisting, while minimizing conflicts between wolves and humans and adverse impacts to big game (CSKT 2015, p. 8).

The objectives of the plan are: (1) Include cultural beliefs of Tribes into wolf management; (2) develop management prescriptions with wolf ecology and behavior in mind; (3) educate residents of the reservation on wolf ecology and management; (4) work cooperatively with State and Federal agencies to monitor and manage wolf conflicts regionally; (5) monitor and manage wolf impacts on ungulates; (6) monitor, manage, and minimize wolf-livestock conflicts; and (7) include human safety as a potential management concern (CSKT 2015, p. 8)

Similar to management on the Blackfeet Indian Reservation, the Flathead Indian Reservation wolf plan does not specify maximum or minimum population sizes. Rather it is driven by wolf behavior and the level of conflict. For example, low levels of conflict with a high wolf population will be tolerated without efforts to reduce the wolf population (CSKT 2015, p. 9). Lethal control may be used for wolves that threaten human safety or kill livestock or domestic animals (CSKT 2015, p. 9). However, trapping and hunting of wolves is not part of the management plan, but it may be considered by the Tribal Council in the future (CSKT 2015, p. 9).

The Flathead Indian Reservation wolf management plan will be reviewed at the end of 5 years of implementation (CSKT 2015, p. 15). We are not aware of any updates or revisions to the plan at this time. Management of wolves on the Flathead Indian Reservation, in coordination with State and Federal agencies, is expected to continue to contribute to the long-term persistence of wolves in Montana.

Confederated Tribes of the Colville Reservation—The Confederated Tribes of the Colville Reservation is located in north-central Washington. At the end of 2019, the minimum wolf count was 37 wolves in five packs on the Colville Reservation (WDFW et al. 2020, p. 3). The CCTFWD Gray Wolf Management Plan was finalized in 2017 and guides management and conservation of gray wolf populations and their prey on the Colville Reservation (CCTFWD 2017, p. 5). The goals of the plan include developing a strategy for maintaining viable wolf populations while also maintaining healthy ungulate populations to support the cultural and subsistence needs of Tribal members and their families (CCTFWD 2017, p. 20). The plan also seeks to resolve wolf-livestock conflicts early to avoid escalation (CCTFWD 2017, p. 24).

Under the CCTFWD wolf plan, management actions include: (1) Monitor gray wolf populations; (2) monitor ungulate response to gray wolf recolonization; (3) educate Tribal members and general public about wolves; (4) use population goals to develop an annual harvest allocation; (5) investigate, document, provide support to reduce resource or property damage; (6) report annual wolf management; (7) establish a wildlife parts distribution protocol; (8) coordinate on regional wolf management concerns; and (9) review and/or modify Tribal Codes to actively manage gray wolves (CCTFWD 2017, pp. 30–32).

With the subsistence culture of the Colville Tribal members, the impacts of

wolves on ungulate populations are an important aspect of the plan (CCTFWD 2017, p. 20). As such, if wolves are determined to be a significant source of reduced ungulate population growth, measures will be considered to preserve the subsistence culture of Colville Tribal Members (CCTFWD 2017, p. 22). Implementation of the CCTFWD gray wolf management plan promotes informed decision making to balance the benefits wolf recovery and maintenance of existing ungulate populations that are important to Colville Tribal members.

Management on Federal Lands

Federal lands in the NRM States of Idaho, Montana, and Wyoming are primarily lands managed by National Park Service, National Wildlife Refuge System, U.S. Forest Service, and Bureau of Land Management. Wolf management on these lands is similar to that described previously in our 2009 and 2012 delisting rules (74 FR 15123, April 2, 2009; 77 FR 55530, September 10, 2012) and elsewhere in this final rule.

The National Park Service Organic Act and National Park Service policies provide protection following Federal delisting for wolves located within park boundaries. Within National Park System units, hunting is not allowed unless the authorizing legislation specifically provides for hunting. National Wildlife Refuges operate under individual Comprehensive Conservation Plans, which guide their management. Hunting wolves is not allowed on National Wildlife Refuge lands (*https://www.fws.gov/refuges/hunting/map/*). Wolves occurring in National Parks and on National Wildlife Refuges in the NRM States are monitored in coordination with the wildlife agencies in those States. Some wolves in protected areas, such as National Park Service land or the National Wildlife Refuge System, may be vulnerable to hunting and other forms of human-caused mortality when they leave these Federal land management units. Overall, National Park Service and National Refuge Lands manage their lands in such a way to provide sufficient habitat for wildlife, including wolves and their prey, and these lands will continue to be adequately managed for multiple uses including for the benefit of wildlife.

Federal law indicates land managed by the Forest Service and the Bureau of Land management shall be managed to provide habitat for fish and wildlife. Wilderness areas are afforded the highest protections of all Forest Service lands. Within Forest Service lands, including Wilderness Areas and Wilderness Study Areas (which are generally Forest Service lands), the Forest Service typically defers to States on hunting decisions (16 U.S.C. 480, 528, 551, 1133; 43 U.S.C. 1732(b)). The primary exception to this deference is the Forest Service's authority to identify areas and periods when hunting is not permitted (43 U.S.C. 1732(b)). However, even these decisions must be developed in consultation with the States. Thus, most State-authorized hunting occurs on State and Federal public lands like National Forests, Wilderness Areas, and Wilderness Study Areas. Bureau of Land Management lands are managed similarly to Forest Service lands. This final rule does not alter the current management on lands under the jurisdiction of the Forest Service or Bureau of Land Management. The Forest Service and Bureau of Land Management have a demonstrated capacity and a proven history of providing sufficient habitat for wildlife, including wolves and their prey, and these lands will continue to be adequately managed for multiple uses including for the benefit of wildlife.

Summary of Management in the NRM DPS

Past and ongoing State, Tribal, and Federal management has provided, and continues to provide, long-term maintenance of the recovered NRM wolf population. Montana, Idaho, and Wyoming implement wolf management in a manner that also encourages connectivity among wolf populations (Groen et al. 2008, entire; WGFC 2011, pp. 26–29, 52, 54; Talbott and Guertin 2012, entire). The coordination and management of wolves above population targets by State, Tribal, and Federal agencies provides protections against potential unforeseen or uncontrollable sources of mortality such that they do not compromise the gray wolf's recovered status in the NRM.

Post-Delisting Management

State Management in Minnesota, Wisconsin, and Michigan

During the 2000 legislative session, the Minnesota Legislature passed wolf-management provisions addressing wolf protection, taking of wolves, and directing the Minnesota Department of Natural Resources (MN DNR) to prepare a wolf-management plan. The MN DNR revised a 1999 draft wolf-management plan to reflect the legislative action of 2000, and completed the Minnesota Wolf Management Plan in early 2001 (MN DNR 2001, entire). The MN DNR plans to update the Wolf Management Plan in the near future, and will create a new advisory committee and use a public process to help inform the update.

The Wisconsin Natural Resources Board approved the Wisconsin Wolf Management Plan in October 1999. In 2004 and 2005 the Wisconsin Wolf Science Advisory Committee and the Wisconsin Wolf Stakeholders group reviewed the 1999 Plan, and the Science Advisory Committee subsequently developed updates and recommended modifications to the 1999 Plan. The updates were completed and received final Natural Resources Board approval on November 28, 2006 (WI DNR 2006a, entire).

In late 1997, the Michigan Wolf Recovery and Management Plan was completed and received the necessary State approvals. That plan focused on recovery of a small wolf population, rather than long-term management of a large wolf population, and addressing the conflicts expected to result as a consequence of successful wolf restoration. The Michigan Department of Natural Resources (MI DNR) revised its original wolf plan and created the 2008 Michigan Wolf Management Plan in recognition of a shift in its focus from the recovery of an endangered species to the management of wolf–human conflicts. The 2008 plan addressed the biological and social issues associated with wolf management in Michigan at that time. Since then, wolf management in Michigan has continued to evolve, and the MI DNR again updated its wolf-management plan in 2015 (MI DNR 2015, entire). The 2015 updates reflect the biological and social issues associated with the increased population size and distribution of wolves in the State, although the four principal goals of the 2008 plan remain the same. The complete text of the Wisconsin, Michigan, and Minnesota wolf-management plans can be found on our website (see **FOR FURTHER INFORMATION CONTACT**).

The following sections discuss the individual state management plans and depredation control that took place while gray wolves were listed in the State, as well as expected post-delisting depredation control and potential public harvest. Wolves have also been removed for health and human safety concerns while they were listed. The number of wolves taken for this purpose is few in any given year, however, thus it will not be discussed for individual state summaries.

The Minnesota Wolf Management Plan—The Minnesota Plan is based, in part, on the recommendations of a State wolf-management roundtable (MN DNR 2001, Appendix V) and on a State wolf-

management law enacted in 2000 (MN DNR 2001, Appendix I). In 2000, the Minnesota legislature passed the Wolf Management Act (Minn. Stat. sections 97B.645–48). That statute specifically requires the MN DNR to adopt a wolf management plan that includes, among other factors, the goal of ensuring the ''long-term survival of wolves in Minnesota.'' It requires preparation of a wolf management plan, establishes gray wolf zones, prohibits the taking of wolves in violation of Federal law, prohibits the harassment of gray wolves, and authorizes the destruction of individual wolves threatening human life and posing imminent threats to cattle or domestic pets. Finally, the Act establishes a civil penalty for the unlawful take, transport, or possession of a wolf in violation of Minnesota's game and fish laws. The Wolf Management Act and the Minnesota Game and Fish Laws constitute the basis of the State's authority to manage wolves. The Plan's stated goal is ''to ensure the long-term survival of wolves in Minnesota while addressing wolf–human conflicts that inevitably result when wolves and people live in the same vicinity'' (MN DNR 2001, p. 2). It establishes a minimum goal of 1,600 wolves in the State. Key components of the plan are population monitoring and management, management of wolf depredation of domestic animals, management of wolf prey, enforcement of laws regulating take of wolves, public education, and increased staffing to accomplish these actions. Following Federal delisting, MN DNR's management of wolves would differ from that which occurred while wolves were listed as threatened under the Act. Most of these differences relate to two aspects of wolf management: The control of wolves that attack or threaten domestic animals and the implementation of a regulated wolf harvest season.

The Minnesota Plan divides the State into two wolf-management zones—Zones A and B (see map in MN DNR 2001, Appendix 3). Zone A corresponds to Federal Wolf Management Zones 1 through 4 (approximately 30,000 mi^2 (77,700 km^2) in northeastern Minnesota) in the Service's Revised Recovery Plan for the Eastern Timber Wolf, whereas Zone B constitutes Zone 5 in that recovery plan (the rest of the State (approximately 57,000 mi^2 (147,600 km^2)) (MN DNR 2001, pp. 19–20 and appendix III; USFWS 1992, p. 72). Within Zone A, wolves would receive strong protection by the State, unless they were involved in attacks on domestic animals. The rules governing the take of wolves to protect domestic animals in Zone B would be less protective of wolves than in Zone A (see *Post-delisting Depredation Control in Minnesota,* below).

The Minnesota Department of Natural Resources plans to allow wolf numbers and distribution to naturally expand, with no maximum population goal. If any winter population estimate is below 1,600 wolves, MN DNR would take actions to ''assure recovery'' to 1,600 wolves (MN DNR 2001 p. 19). The MN DNR plans to continue to monitor wolves in Minnesota to determine whether such intervention is necessary. In response to the 2011 delisting of the WGL DPS, in 2013 the MN DNR increased the frequency of population surveys from every 5 years to every year. Although the agency is evaluating wolf-monitoring methods and optimal frequencies, in the short term it plans to continue annual population-size estimates. In addition to these statewide population surveys, MN DNR annually reviews data on depredation-incident frequency and locations provided by Wildlife Services and winter track-survey indices (see Erb 2008, entire) to help ascertain annual trends in wolf population or range (MN DNR 2001, pp. 18–19).

Minnesota (MN DNR 2001, pp. 21–24, 27–28) plans to reduce or control illegal mortality of wolves through education, increased enforcement of the State's wolf laws and regulations, discouraging new road access in some areas, and maintaining a depredation-control program that includes compensation for livestock losses. The MN DNR plans to use a variety of methods to encourage and support education of the public about the effects of wolves on livestock, wild ungulate populations, and human activities and the history and ecology of wolves in the State (MN DNR 2001, pp. 29–30). These are all measures that have been in effect for years in Minnesota, although increased enforcement of State laws against take of wolves would replace enforcement of the Act's take prohibitions. Financial compensation for livestock losses has increased to the full market value of the animal, replacing previous caps of $400 and $750 per animal (MN DNR 2001, p. 24). We do not expect the State's efforts to result in the reduction of illegal take of wolves from existing levels, but we anticipate that these measures will help prevent a significant increase in illegal mortality after Federal delisting.

Under Minnesota law, the illegal killing of a wolf is a gross misdemeanor and is punishable by a maximum fine of $3,000 and imprisonment for up to 1 year. The restitution value of an illegally killed wolf is $2,000 (MN DNR 2001, p. 29). The MN DNR has designated three conservation officers who are stationed in the State's wolf range as the lead officers for implementing the wolf-management plan (MN DNR 2001, pp. 29, 32; Stark in litt. 2018).

Depredation Control in Minnesota—Although federally protected as a threatened species in Minnesota, wolves that attacked domestic animals have been killed by designated government employees under the authority of a regulation (50 CFR 17.40(d)) under section 4(d) of the Act. However, no control of depredating wolves was allowed in Federal Wolf Management Zone 1, comprising about 4,500 mi^2 (7,200 km^2) in extreme northeastern Minnesota (USFWS 1992, p. 72). In Federal Wolf Management Zones 2 through 5, employees or agents of the Service (including USDA–APHIS–Wildlife Services) have taken wolves in response to depredations of domestic animals within one-half mile (0.8 km) of the depredation site. Young-of-the-year (young produced in one reproductive year) captured on or before August 1 must be released. The regulations that allow for this take (50 CFR 17.40(d)(2)(i)(C)) do not specify a maximum duration for depredation control, but, per State rules, a site may be worked for no more than 60 days after a verified depredation event.

During the period from 1980–2018, the Federal Minnesota wolf-depredation-control program euthanized between 20 (in 1982) and 215 (in 2012) wolves annually. The annual averages and the percentage of the statewide wolf population for 5-year periods are presented in table 4.

TABLE 4—AVERAGE ANNUAL NUMBER OF WOLVES EUTHANIZED UNDER MINNESOTA WOLF DEPREDATION CONTROL AND THE PERCENTAGE OF THE STATEWIDE WOLF POPULATION FOR 5 YEAR PERIODS DURING 1980–2017

[Final time period represents 4, rather than 5 years]

	1980–1984	1985–1989	1990–1994	1995–1999	2000–2004	2005–2009	2010–2014	2015–2018
Average annual # wolves euthanized	30	49	115	152	128	157	194	194
Average annual % of wolf population	2.2	3.0	6.0	6.7	4.2	5.4	7.6	7.5

(Erb 2008, p. 4; USDA–Wildlife Services 2010, p. 3; USDA–Wildlife Services 2011, p. 3; USDA–Wildlife Services 2017, p. 3; USDA–Wildlife Services 2018, p. 2).

Since 1980, the lowest annual percentage of Minnesota wolves killed under this program was 1.5 percent in 1982; the highest percentage was 9.4 in both 1997 and 2015 (Paul 2004, pp. 2–7; Paul 2006, p. 1; USDA–Wildlife Services 2017, p. 3; USDA–Wildlife Services 2018, p. 2). The periods during which the depredation-control program was taking its highest percentages of wolves was during the 1990s and the 2010s. During the 1990s, when wolves euthanized for depredation control averaged around 6 percent of the wolf population, Minnesota wolf numbers continued to grow at an average annual rate of nearly 4 percent (Paul 2004, pp. 2–7). Wolf populations in the State fluctuated during the 2010s, when wolves euthanized for depredation control averaged around 7 percent of the wolf population. Although wolf populations in the State did decline while wolves were delisted from 2011–2014, other management techniques in addition to depredation control were also implemented during that time (*e.g.,* regulated harvest), aimed at reducing wolf numbers while maintaining a minimum population level. The past level of wolf removal for depredation control has not interfered with wolf recovery in Minnesota.

Under a Minnesota statute, the Minnesota Department of Agriculture (MDA) compensates livestock owners for full market value of livestock that wolves have killed or severely injured. An authorized investigator must confirm that wolves were responsible for the depredation. The Minnesota statute also requires MDA to periodically update its Best Management Practices to incorporate new practices that it finds would reduce wolf depredation (Minnesota Statutes 2018, Section 3.737, subdivision 5).

Post-delisting Depredation Control in Minnesota—When wolves in Minnesota are delisted, depredation control will be authorized under Minnesota State law and conducted in conformance with the Minnesota Wolf Management Plan (MN DNR 2001). The Minnesota Plan divides the State into Wolf Management Zones A and B, as discussed above. The statewide survey conducted during the winter of 2003–2004 estimated that there were approximately 2,570 wolves in Zone A and 450 in Zone B (Erb in litt. 2005). As discussed in Recovery Criteria for the Eastern United States above, the Federal planning goal is 1,251–1,400 wolves for Zones 1–4 and there is no minimum population goal for Zone 5 (USFWS 1992, p. 28).

In Zone A, wolf depredation control will be limited to situations of (1) immediate threat and (2) following verified loss of domestic animals. In this zone, if a state-authorized entity verifies that a wolf destroyed any livestock, domestic animal, or pet, and if the owner requests wolf control be implemented, trained and certified predator controllers or Wildlife Services may take wolves (specific number to be determined on a case-by-case basis) within a 1-mile (1.6-km) radius of the depredation site (depredation-control area) for up to 60 days. In contrast, in Zone B, predator controllers or Wildlife Services may take wolves (specific number to be determined on a case-by-case basis) for up to 214 days after MN DNR opens a depredation-control area, depending on the time of year. Under State law, the MN DNR may open a control area in Zone B anytime within 5 years of a verified depredation loss upon request of the landowner, thereby providing more of a preventative approach than is allowed in Zone A, in order to avoid repeat depredation incidents (MN DNR 2001, p. 22).

Depredation control will be allowed throughout Zone A, which includes an area (Federal Wolf Management Zone 1) where such control has not been permitted under the Act's protection. Depredation by wolves in Zone 1, however, has been limited to two to four reported incidents per year, mostly of wolves killing dogs. In 2009, there was one probable and one verified depredation of a dog near Ely, Minnesota, and in 2010, Wildlife Services confirmed three dogs killed by wolves in Zone 1 (USDA–Wildlife Services 2009, p. 3; USDA–Wildlife Services 2010, p. 3). There are few livestock in Zone 1; therefore, the number of verified future depredation incidents in that Zone is expected to be low, resulting in a correspondingly low number of depredating wolves being killed there after delisting.

State law and the Minnesota Plan will also allow for private wolf depredation control throughout the State. Any person can shoot or destroy a wolf that poses ''an immediate threat'' to livestock, guard animals, or domestic animals on lands that he or she owns, leases, or occupies. Immediate threat is defined as ''in the act of stalking, attacking, or killing.'' This does not include trapping because traps cannot be placed in a manner such that they trap only wolves in the act of stalking, attacking, or killing. Owners of domestic pets can also kill wolves posing an immediate threat to pets under their supervision on lands that they do not own or lease, although such actions are subject to local ordinances, trespass law, and other applicable restrictions. To protect their domestic animals in Zone B, individuals do not have to wait for an immediate threat or a depredation incident in order to take wolves. At any time in Zone B, persons who own, lease, or manage lands may shoot wolves on those lands to protect livestock, domestic animals, or pets. They may also employ a predator controller or request assistance from Wildlife Services to trap a wolf on their land or within 1 mile (1.6 km) of their land (with permission of the landowner) to protect their livestock, domestic animals, or pets (MN DNR 2001, pp. 23–24). The MN DNR will investigate any private taking of wolves in Zone A (MN DNR 2001, p. 23). The Minnesota Plan will also allow persons to harass wolves anywhere in the State within 500 yards of ''people, buildings, dogs, livestock, or other domestic pets or animals.'' Harassment may not include physical injury to a wolf.

As discussed above, landowners or lessees will be allowed to respond to situations of immediate threat by shooting wolves in the act of stalking,

attacking, or killing livestock or other domestic animals in Zone A. We conclude that this action is not likely to result in the killing of many additional wolves, as opportunities to shoot wolves ''in the act'' will likely be few and difficult to successfully accomplish, a conclusion shared by a highly experienced wolf-depredation agent (Paul in litt. 2006, p. 5).

State law and the Minnesota Plan will provide broad authority to landowners and land managers to shoot wolves at any time to protect their livestock, pets, or other domestic animals on land owned, leased, or managed by the individual in Zone B (as described above). Such takings can occur in the absence of wolf attacks on the domestic animals. Thus, the estimated 450 wolves in Zone B could be subject to substantial reduction in numbers. At the extreme, wolves could be eliminated from Zone B, but this is highly unlikely—the Minnesota Plan states that ''Although depredation procedures will likely result in a larger number of wolves killed, as compared to previous ESA management, they will not result in the elimination of wolves from Zone B.'' (MN DNR 2001, pp. 22–23). While wolves were under State management in 2007–2008 and in 2011–2014, landowners in Zone B shot six and eight wolves under this authority, respectively. Fourteen additional wolves were trapped and euthanized in Zone B by State-certified predator controllers and Wildlife Services, 1 in 2009, and 13 in 2013 (Stark in litt. 2009; Stark in litt. 2018).

The limitation of this broad take authority to Zone B is fully consistent with the advice in the Revised Recovery Plan that wolves should be restored to the rest of Minnesota but not to Zone B (Federal Zone 5) (USFWS 1992, p. 20). The Revised Recovery Plan for the Eastern Timber Wolf envisioned that the Minnesota numerical planning goal would be achieved solely in Zone A (Federal Zones 1–4) (USFWS 1992, p. 28), and that has occurred. Wolves outside of Zone A are not necessary to the establishment and long-term viability of a self-sustaining wolf population in the State, and, therefore, there is no need to establish or maintain a wolf population in Zone B. Accordingly, there is no need to maintain significant protection for wolves in Zone B in order to maintain a Minnesota wolf population that continues to satisfy the Federal recovery criteria after Federal delisting.

This expansion of depredation-control activities would not threaten the continued survival of wolves in the State or the long-term viability of the wolf population in Zone A, the majority of wolf range in Minnesota. Significant changes in wolf depredation control under State management will primarily be restricted to Zone B, which is outside of the area necessary for wolf recovery (USFWS 1992, pp. 20, 28). Furthermore, wolves are highly likely to persist in Zone B despite the likely increased take there. With respect to Zone A, the Eastern Timber Wolf Recovery Team concluded that the changes in wolf management would be ''minor'' and would not likely result in ''significant change in overall wolf numbers.'' They found that, despite an expansion of the individual depredation-control areas, depredation control would remain ''very localized'' in Zone A. The requirement that such depredation-control activities be conducted only in response to verified wolf depredation in Zone A played a key role in the team's evaluation (Peterson in litt. 2001). While wolves were under State management in 2007 and 2008, the number of wolves killed for depredation control (133 wolves in 2007 and 143 wolves in 2008) remained consistent with those killed under the special regulation under section 4(d) of the Act while wolves were federally listed (105 in 2004; 134 in 2005; and 122 in 2006). The number of wolves killed for depredation control while wolves were under State management for the second time (2011–2014) was slightly higher (203 wolves in 2011; 262 in 2012; 114 in 2013; and 197 in 2014) than during 2007 and 2008, but was still consistent with those killed under section 4(d) in the surrounding years (192 wolves in 2010 and 213 in 2015).

Minnesota will continue to monitor wolf populations throughout the State and will also monitor all depredation-control activities in Zone A (MN DNR 2001, p. 18). We expect that these and other activities contained in their plan will be effective in meeting their population goal of a minimum statewide winter population of 1,600 wolves, well above the planning goal of 1,251 to 1,400 wolves that the Revised Recovery Plan identifies as sufficient to ensure the wolf's continued survival in Minnesota (USFWS 1992, p. 28).

Post-delisting Regulated Harvest in Minnesota—The Minnesota Department of Natural Resources will consider wolf population-management measures, including public hunting and trapping seasons and other methods, when wolves are federally delisted. In 2011, the Minnesota Legislature authorized the MN DNR to implement a wolf season following the Federal delisting and classified wolves as small game in State statute (Minnesota Statutes 2018 97B.645 Subd. 9). Following Federal delisting, the 2012 Legislature established wolf hunting and trapping licenses, clarified the authority for the MN DNR to implement a wolf season, and required the start of the season to be no later than the start of firearms deer season each year. Three regulated harvest seasons (in 2012, 2013, and 2014) were subsequently implemented in the State while wolves were federally delisted. The harvest was divided into three segments: An early hunting season that coincided with the firearms deer season, a late hunting season, and a concurrent late trapping season. In 2012, the MN DNR established a total target harvest of 400 wolves (the close of the harvest season is to be initiated when that target is met) (Stark and Erb 2013, pp. 1–2). During that first regulated season, 413 wolves were harvested. Based on the results of the 2012 harvest season, the MN DNR adjusted the target to 220 wolves for 2013; that year 238 wolves were harvested. The 2014 target harvest was 250 wolves and 272 were harvested.

The Minnesota management plan requires that population-management measures be implemented in such a way to maintain a statewide late-winter wolf population of at least 1,600 animals (MN DNR 2001, pp. 19–20), well above the planning goal of 1,251 to 1,400 wolves for the State in the Revised Recovery Plan (USFWS 1992, p. 28). Therefore, we expect the management measures implemented under that requirement will ensure the wolf's continued survival in Minnesota.

The Wisconsin Wolf Management Plan—The Wisconsin Plan allows for differing levels of protection and management within four separate management zones (see WI DNR 2006a, figure 8). The Northern Forest Zone (Zone 1) and the Central Forest Zone (Zone 2) contain most of the State's wolf population, with approximately 6 percent of the Wisconsin wolves in Zones 3 and 4 (Wydeven and Wiedenhoeft 2009, table 1). Zones 1 and 2 contain all the larger unfragmented areas of suitable habitat, so we anticipate that most of the State's wolf packs will continue to inhabit those parts of Wisconsin. At the time the 1999 Wisconsin Plan was completed, it recommended immediate reclassification from State-endangered to State-threatened status, because Wisconsin's wolf population had already exceeded its reclassification criterion of 80 wolves for 3 years; thus, State reclassification occurred that same year.

The Wisconsin Plan contains a management goal of 350 wolves outside

of Native American reservations, and specifies that the species should be delisted by the State once the population reaches 250 animals outside of reservations. The species was proposed for State delisting in late 2003, and the State delisting process was completed in 2004. Upon State delisting, the species was classified as a ''protected nongame species,'' a designation that continues State prohibitions on sport hunting and trapping of the species (Wydeven and Jurewicz 2005, p. 1; WI DNR 2006b, p. 71). The Wisconsin Plan includes criteria for when State relisting to threatened (a decline to fewer than 250 wolves for 3 years) or endangered status (a decline to fewer than 80 wolves for 1 year) should be considered. The Wisconsin Plan will be reviewed annually by the Wisconsin Wolf Advisory Committee and will be reviewed by the public every 5 years.

The Wisconsin Plan was updated between 2004 and 2006 to reflect current wolf numbers, additional knowledge, and issues that have arisen since its 1999 completion. This update was not a major revision; rather, it included text changes, revisions to two appendices, and the addition of a new appendix to the 1999 plan. Several components of the plan that are key to our delisting evaluation were not changed. The State wolf-management goal of 350 animals and the boundaries of the four wolf-management zones remain the same as in the 1999 Plan. The updated 2006 Plan continues to recommend access management on public lands and the protection of active den sites. Protection of pack-rendezvous sites, however, is no longer considered necessary in areas where wolves have become well established, due to the transient nature of these sites and the larger wolf population. The updated Plan states that rendezvous sites may need protection in areas where wolf colonization is still under way or where pup survival is extremely poor, such as in northeastern Wisconsin (WI DNR 2006a, p. 17). The guidelines for the wolf depredation-control program (see *Post-delisting Depredation Control in Wisconsin*) did not undergo significant alteration during the update process. The only substantive change to depredation-control practices is to expand the area of depredation-control trapping in Zones 1 and 2 to 1 mi (1.6 km) outward from the depredation site, replacing the previous 0.5-mi (0.8-km) radius trapping zone (WI DNR 2006a, pp. 3–4).

An important component of the Wisconsin Plan is the annual monitoring of wolf populations by radio collars and winter track surveys in order to provide comparable annual data to assess population size and growth for at least 5 years after Federal delisting. The Wisconsin Plan also includes a hierarchical approach to wolf health monitoring that is predicated on the species' conservation status. Following Federal delisting, the Wisconsin DNR will assume responsibility for all health monitoring, which will include examination of all dead wolves found, necropsy of suspicious deaths to identify the mortality agent responsible, and health monitoring of wild wolves captured for research purposes in coordination with the Wisconsin DNR Wildlife Health Team (WI DNR 2006a, p. 13). The 2006 update to the Wisconsin Wolf Management Plan did not change the WI DNR's commitment to annual wolf population monitoring, and ensures accurate and comparable data (WI DNR 1999, pp. 19–20).

Cooperative habitat management will be promoted with public and private landowners to maintain existing road densities in Zones 1 and 2, protect wolf dispersal corridors, and manage forests for deer and beaver (WI DNR 1999, pp. 4, 22–23; 2006a, pp. 15–17). Furthermore, in Zone 1, a year-round prohibition on tree harvest within 330 feet (100 m) of active den sites and seasonal restrictions to reduce disturbance within one-half mile (0.8 km) of dens will be WI DNR policy on public lands and will be encouraged on private lands (WI DNR 1999, p. 23; 2006a, p. 17).

The 1999 Wisconsin Plan contains, and the 2006 update retains, other components that will protect wolves and help maintain a viable wolf population in the State following delisting. Namely, the plan: (1) Continues the protection of the species as a ''protected wild animal'' with penalties similar to those for unlawfully killing large game species (fines of up to $1,000–$2,000 and possible loss of hunting privileges for 3 years); (2) requires State permits to possess a wolf or wolf–dog hybrid; and (3) establishes a restitution value to be levied in addition to fines and other penalties for wolves that are illegally killed (WI DNR 1999, pp. 21, 27, 30–31; 2006a, pp. 3–4).

The 2006 update of the Wisconsin Plan continues to emphasize the need for public education efforts that focus on living with a recovered wolf population, ways to manage wolves and wolf–human conflicts, and the ecosystem role of wolves. The Plan implements the State law requiring reimbursement for depredation losses (including dogs and missing calves), citizen stakeholder involvement in the wolf-management program, and coordination with the Tribes in wolf management and investigation of illegal killings (WI DNR 1999, pp. 24, 28–29; 2006a, pp. 22–23).

Depredation Control in Wisconsin—Lethal depredation control has not been authorized in Wisconsin (due to the listed status of wolves there as endangered) except for several years when such control was authorized under a permit from the Service or while wolves were delisted under previous actions. The rapidly expanding Wisconsin wolf population has resulted in an increased need for depredation control, however. From 1979 through 1989, there were only five cases (an average of 0.4 per year) of verified wolf depredations in Wisconsin, but the number of incidents has steadily increased over the subsequent decades. During the 1990s there were an average of approximately 4 incidents per year, increasing to an average of approximately 38 per year during the 2000s and to an average of approximately 69 per year since 2010 (WI DNR data files and summary of wolf survey and depredation reports).

A significant portion of depredation incidents in Wisconsin involve attacks on dogs. In most cases, these have been hunting dogs that were being used for, or being trained for, hunting bears, bobcats, coyotes, and snowshoe hare (Ruid et al. 2009, pp. 285–286). It is believed that the dogs entered the territory of a wolf pack and may have been close to a den, rendezvous site, or feeding location, thus triggering an attack by wolves defending their territory or pups. The frequency of attacks on hunting dogs has increased as the State's wolf population has grown. Of the 206 dogs killed by wolves during the 25 years from 1986–2010, more than 80 percent occurred during the period from 2001–2010, with an average of 17 dogs killed annually during that 10-year period (WI DNR files). Data on depredations from 2013 to 2017 show a continued increase in wolf attacks on dogs, with an average of 23 dogs killed annually (with a high of 41 dogs in 2016). While the WI DNR compensates dog owners for mortalities and injuries to their dogs, the DNR takes no action against the depredating pack unless the attack was on a dog that was leashed, confined, or under the owner's control on the owner's land. Instead, the WI DNR issues press releases to warn bear hunters and bear-dog trainers of the areas where wolf packs have been attacking bear dogs (WI DNR 2008, p. 5) and provides maps and advice to hunters on the WI DNR website (see

https://dnr.wi.gov/topic/Wildlife Habitat/wolf/dogdeps.html).

During the first periods that wolves were federally delisted in Wisconsin (from March 2007 through September 2008 and from April through early July 2009), 92 wolves were killed for depredation control in the State, including 8 legally shot by private landowners (Wydeven and Wiedenhoeft 2008, p. 8; Wydeven et al. 2009b, p. 6; Wydeven et al. 2010, p. 13). When wolves were again delisted from January 2012 through December 2014, depredation control resulted in 164 wolves being killed, including 38 legally shot by private landowners (McFarland and Wiedenhoeft 2013, p. 9; Wiedenhoeft et al, 2014, p. 10; Wiedenhoeft et al. 2015, p. 10).

Post-delisting Depredation Control in Wisconsin—Following Federal delisting, wolf depredation control in Wisconsin will be carried out according to the 2006 Updated Wisconsin Wolf Management Plan (WI DNR 2006a, pp. 19–23), Guidelines for Conducting Depredation Control on Wolves in Wisconsin Following Federal Delisting (WI DNR 2014c). The 2006 updates did not significantly change the 1999 State Plan, and the State wolf management goal of 350 wolves outside of Indian reservations (WI DNR 2006a, p. 3) is unchanged. Verification of wolf depredation incidents will continue to be conducted by U.S. Department of Agriculture–Animal and Plant Health Inspection Service–Wildlife Services (hereafter Wildlife Services), working under a Cooperative Service Agreement with WI DNR, or at the request of a Tribe, depending on the location of the suspected depredation incident. If determined to be a confirmed or probable depredation by a wolf or wolves, one or more of several options will be implemented to address the depredation problem. These options include technical assistance, loss compensation to landowners, translocating or euthanizing problem wolves, implementation of nonlethal management methods, and private landowner or agency control of problem wolves in some circumstances (WI DNR 2006a, pp. 3–4, 20–22).

Technical assistance, consisting of advice or recommendations to prevent or reduce further wolf conflicts, will be provided. This may also include providing the landowner with various forms of noninjurious behavior-modification materials, such as flashing lights, noise makers, temporary fencing, and fladry (a string of flags used to contain or exclude wild animals). Monetary compensation is also provided for all verified and probable losses of domestic animals and for a portion of documented missing calves (WI DNR 2006a, pp. 22–23). The compensation is made at full market value of the animal (up to a limit of $2,500 for dogs) and can include veterinarian fees for the treatment of injured animals (WI DNR 2006c 12.54). Current Wisconsin law requires the continuation of the compensation payment for wolf depredation regardless of Federal listing or delisting of the species (WI DNR 2006c 12.50). In recent years, annual depredation compensation payments have ranged from $91,000 (2009) to $256,000 (2017). From 1985 through April 2018, the WI DNR had spent over $2,378,000 on reimbursement for damage caused by wolves in the State, with 60 percent of that total spent over the last 10 years (since 2009) (*https://dnr.wi.gov/topic/wildlifehabitat/wolf/documents/WolfDamagePayments.pdf*).

For depredation incidents in Wisconsin Zones 1 through 3, where all wolf packs currently reside, wolves may be trapped by Wildlife Services or WI DNR personnel and, if feasible, translocated and released at a point distant from the depredation site. If wolves are captured adjacent to an Indian reservation or a large block of public land, the animals may be translocated locally to that area. Long-distance translocating of depredating wolves has become increasingly difficult in Wisconsin and is likely to be used infrequently in the future as long as the off-reservation wolf population is above 350 animals. In most wolf-depredation cases where technical assistance and nonlethal methods of behavior modification are judged to be ineffective, wolves will be shot or trapped and euthanized by Wildlife Services or WI DNR personnel. Trapping and euthanizing will be conducted within a 1-mi (1.6-km) radius of the depredation in Zones 1 and 2, and within a 5-mi (8-km) radius in Zone 3. There is no distance limitation for depredation-control trapping in Zone 4, and all wolves trapped in Zone 4 will be euthanized, rather than translocated (WI DNR 2006a, pp. 22–23).

Full authority to conduct lethal depredation control has not been allowed in Wisconsin (due to the listed status of the wolf as an endangered species) except for short periods of time. So we have evaluated post-delisting lethal depredation control based upon verified depredation incidents over the last decade and the impacts of the implementation of similar lethal control of depredating wolves under 50 CFR 17.40(d) for Minnesota, § 17.40(o) for Wisconsin and Michigan, and section 10(a)(1)(A) of the Act for Wisconsin and Michigan. Under those authorities, WI DNR and Wildlife Services trapped and euthanized 17 wolves in 2003; 24 in 2004; 29 in 2005; 18 in 2006; 37 in 2007; 39 in 2008; 9 in 2009; and 16 in 2010 (WI DNR 2006a, p. 32; Wydeven et al. 2009a, pp. 6–7; Wydeven et al. 2010, p. 15; Wydeven et al. 2011, p. 3).

Although these lethal control authorities applied to WI DNR for only a portion of 2003 (April through December) and 2005 (all of January for both States; April 1 and April 19, for Wisconsin and Michigan respectively, through September 13), they covered nearly all of the verified wolf depredations during 2003–2005, and thus provide a reasonable measure of annual lethal depredation control. For 2003, 2004, and 2005, this represents 5.1 percent, 6.4 percent, 7.4 percent (including the several possible wolf–dog hybrids), respectively, of the late-winter population of Wisconsin wolves during the previous winter. This level of lethal depredation control was followed by a wolf population increase of 11 percent from 2003 to 2004, 17 percent from 2004 to 2005, and 7 percent from 2005 to 2006 (Wydeven and Jurewicz 2005, p. 5; Wydeven et al. 2006, p. 10). Limited lethal-control authority was granted to WI DNR for 3.5 months in 2006 by a section 10 permit, resulting in removal of 18 wolves (3.9 percent of the winter wolf population) (Wydeven et al. 2007, p. 7).

Lethal depredation control was again authorized in the State while wolves were delisted in 2007 (9.5 months) and 2008 (9 months). During those times, 40 and 43 wolves, respectively, were killed for depredation control (by Wildlife Services or by legal landowner action), representing 7 and 8 percent of the late-winter population of Wisconsin wolves during the previous year. This level of lethal depredation control was followed by a wolf population increase of 0.5 percent from 2007 to 2008, and 12 percent from 2008 to 2009 (Wydeven and Wiedenhoeft 2008, pp. 19–22; Wydeven et al. 2009a, p. 6). Authority for lethal control on depredating wolves occurred for only 2 months in 2009. During that time, eight wolves were euthanized for depredation control by Wildlife Services, and one wolf was shot by a landowner; additionally, later in 2009 after relisting, a wolf was captured and euthanized by Wildlife Services for human safety concerns (Wydeven et al. 2010, p. 15). Thus in 2009, 10 wolves, or 2 percent of the winter wolf population, were removed in control activities.

In 2010, authority for lethal control of wolves depredating livestock was not

available in Wisconsin, but 16 wolves or 2 percent of the winter population were removed for human-safety concerns (Wydeven et al. 2011, p. 3). The Wisconsin wolf population in winter 2010–2011 grew to 687 wolves, an increase of 8 percent from the wolf population in winter 2009–2010 (Wydeven et al. 2010, pp. 12–13). When wolves were again delisted from January 2012 through December 2014, a total of 164 wolves were killed under authorized lethal depredation control (McFarland and Wiedenhoeft 2013, p. 9; Wiedenhoeft et al. 2014, p. 10; Wiedenhoeft et al. 2015, p. 10). It is more difficult to evaluate the effects attributed specifically to depredation control over that time, as the State also implemented a regulated public harvest those years. However, information from previous years where depredation control was the primary change in management provides strong evidence that this form and magnitude of depredation control would not adversely affect the viability of the Wisconsin wolf population. Furthermore, Stenglein et al. (2015a, pp. 17–21) demonstrates that regular removal of 10 percent of the wolf population for depredation controls has little impact on growth of the wolf population. The locations of depredation incidents provide additional evidence that lethal control will not have an adverse impact on the State's wolf population. Most livestock depredations are caused by packs near the northern forest-farm-land interface. Few depredations occur in core wolf range and in large blocks of public land. Thus, lethal depredation-control actions would not affect most of the Wisconsin wolf population (WI DNR 2006a, p. 30). Additionally, Olson et al. (2015, pp. 680–681) showed that only a small percentage of packs cause depredation on livestock, and several risk maps show that the potential locations with high risk of wolf depredations on livestock represent a small portion of wolf range in Wisconsin (Treves et al. 2011, entire; Treves and Rabenhorst 2017, entire).

One substantive change to lethal control that will result from Federal delisting is the ability of a small number of private landowners, whose farms have a history of recurring wolf depredation, to obtain limited-duration permits from WI DNR to kill a limited number of depredating wolves on land they own or lease, based on the size of the pack causing the local depredations (WI DNR 2008, p. 8). Such permits can be issued to: (1) Landowners with verified wolf depredations on their property within the last 2 years; (2) landowners within 1 mile (1.6 km) of properties with verified wolf depredations during the calendar year; (3) landowners with vulnerable livestock within WI DNR-designated proactive control areas; (4) landowners with human safety concerns on their property; and (5) landowners with verified harassment of livestock on their property (WI DNR 2008, p. 8). Limits on the number of wolves that could be killed will be based on the estimated number of wolves in the pack causing depredation problems.

During the 19 months in 2007 and 2008 when wolves were federally delisted, the WI DNR issued 67 such permits, resulting in 2 wolves being killed. Some landowners received permits more than once, and permits were issued for up to 90 days at a time and restricted to specific calendar years. In addition, landowners and lessees of land statewide will be allowed to kill a wolf ''in the act of killing, wounding, or biting a domestic animal'' without obtaining a permit. The incident must be reported to a conservation warden within 24 hours, and the landowners are required to turn any dead wolves over to the WI DNR (WI DNR 2006a, pp. 22–23; WI DNR 2008, p. 6). During that same 19-month time period, landowners killed a total of five wolves under that authority. One wolf was shot in the act of attacking domestic animals during the 2 months when wolves were delisted in 2009. Another 38 wolves were legally shot by landowners during the 35 months that wolves were delisted from 2012 to 2014. The death of these 46 additional wolves—which accounted for less than 3 percent of the State's wolves in any year—did not affect the viability of the population.

Another potential substantive change after delisting will be proactive trapping or ''intensive control'' of wolves in sub-zones of the larger wolf-management zones (WI DNR 2006a, pp. 22–23). Triggering actions and types of controls planned for these ''proactive control areas'' are listed in the WI DNR depredation-control guidelines (WI DNR 2008, pp. 7–9). Controls on these actions would be considered on a case-by-case basis to address specific problems, and will be carried out only in areas that lack suitable habitat, have extensive agricultural lands with little forest interspersion, in urban or suburban settings, and only when the State wolf population is well above the management goal of 350 wolves outside Indian reservations in late-winter surveys. The use of intensive population management in small areas would be adapted as experience is gained with implementing and evaluating localized control actions (Wydeven 2006, pers. comm.). We are confident that the number of wolves killed by these actions will not affect the long-term viability of the Wisconsin wolf population, because generally less than 15 percent of packs cause depredations that will initiate such controls, and ''proactive'' controls will be carried out only if the State's late-winter wolf population exceeds 350 animals outside Indian reservations.

The State's current guidelines for conducting depredation-control actions say that no control trapping would be conducted on wolves that kill ''dogs that are free roaming, roaming at large, hunting, or training on public lands, and all other lands except land owned or leased by the dog owner'' (WI DNR 2008, p. 5). Controls will be applied on wolves depredating pet dogs attacked near homes and wolves attacking livestock. Because of these State-imposed limitations, we conclude that lethal control of wolves depredating on hunting dogs will be rare and, therefore, will not be a significant additional source of mortality in Wisconsin. Lethal control of wolves that attack captive deer is included in the WI DNR depredation-control program, because farm-raised deer are considered to be livestock under Wisconsin law (WI DNR 2008, pp. 5–6; 2006c, 12.52). However, we expect that changes to Wisconsin regulations for deer farm fencing will result in reduced wolf depredations inside deer farms, thus decreasing the need for lethal control. Claims for wolf depredation compensation are rejected if the claimant is not in compliance with regulations regarding farm-raised-deer fencing or livestock-carcass disposal (Wisconsin Statutes 90.20 & 90.21, WI DNR 2006c 12.54).

Data from verified wolf depredations in recent years indicate that depredation on livestock is likely to increase as long as the Wisconsin wolf population increases in numbers and range. Wolf packs in more marginal habitat with high acreage of pasture land are more likely to become depredators (Treves et al. 2004, pp. 121–122). Most large areas of forest land and public lands are included in Wisconsin Wolf Management Zones 1 and 2, and they have already been colonized by wolves. Therefore, new areas likely to be colonized by wolves in the future will be in Zones 3 and 4, where they will be exposed to much higher densities of farms, livestock, and residences. During 2008, of farms experiencing wolf depredation, 25 percent (8 of 32) were in Zone 3, yet only 4 percent of the State wolf population occurs in this zone

(Wydeven et al. 2009a, p. 23). Further expansion of wolves into Zone 3 will likely lead to an increase in depredation incidents and an increase in lethal control actions against Zone 3 wolves. However, these Zone 3 mortalities will have a negligible impact on wolf population viability in Wisconsin because of the much larger wolf populations in Zones 1 and 2.

We anticipate that under the management laid out in the Wisconsin Wolf Management Plan the wolf population in Zones 1 and 2 will continue to greatly exceed the recovery goal in the Revised Recovery Plan of 200 late-winter wolves for an isolated population and 100 wolves for a subpopulation [5] connected to the larger Minnesota population, regardless of the extent of wolf mortality from all causes in Zones 3 and 4. Ongoing annual wolf population monitoring by WI DNR will provide timely and accurate data to evaluate the effects of wolf management under the Wisconsin Plan.

Post-delisting Regulated Harvest in Wisconsin—A regulated public harvest of wolves is acknowledged in the Wisconsin Wolf Management Plan and its updates as a potential management technique (WI DNR 1999, Appendix D; 2006c, p. 23). Wisconsin Act 169 was enacted in April 2012, following Federal delisting of wolves earlier that year. The law reclassified wolves in Wisconsin as a game species and directed the WI DNR to establish a harvest season in 2012. The harvest season was set from October 15 through February 28 with zones closing as individual quotas are met. The WI DNR holds the authority to determine harvest zones and set harvest quotas.

With the establishment of the first wolf hunting season in 2012, the WI DNR modified the four zones from the 1999 wolf plan into six harvest zones (WI DNR 2014a, p. 8). Much of the original Zone 1 (northern forest wolf range) from the 1999 plan was modified into four harvest zones, with harvest Zones 1 and 2 representing core wolf areas and Zone 3 and 4 representing transitional wolf habitat. Most of Zone 2 from the 1999 plan (central forest core wolf range) became harvest Zone 5. The remainder of the State is marginal or unsuitable wolf habitat and became wolf harvest Zone 6.

Harvest quotas for the 2012–2013 season were designed to begin reducing the population toward the established objective, and the harvest zones were designed to focus harvest in areas of highest human conflict with lower harvest rates in areas of primary wolf habitat. State-licensed hunters and trappers were not allowed permits within the reservation boundaries of the Bad River, Red Cliff, Lac Courte Oreilles, Lac Du Flambeau, and Menominee reservations or within the Stockbridge-Munsee wolf zone. A large portion of the zones open to wolf hunting in the State included ceded territories (lands outside reservations where Tribes continue to hold fishing, hunting, and gathering rights). Within ceded territories, the Tribes can request up to half of any allowable harvest of wildlife for their members. The ceded territories portions of wolf harvest zones included an allowable harvest of 170 wolves, and one half (or 85 wolves) was offered to the Tribes for harvest in 2012. The Tribes chose not to take part in the wolf harvest, and all Tribes in the State closed tribal lands to wolf hunting. Because the Tribes chose not to exercise their wolf hunting authority, the portions of the allowable harvest offered to Tribes declined in subsequent years to 24 in 2013, and 6 in 2014 (WI DNR 2013 pp. 1, 2; WI DNR 2014b, p. 4; McFarland and Wiedenhoeft 2015, pp. 2, 4).

The Wisconsin Natural Resources Board established a total quota of 201 wolves (comprising a State-licensed quota of 116 wolves and a Tribal offer of 85 wolves). A total of 117 wolves were harvested during that first season, all under the State licenses (Tribes did not authorize Tribal members to harvest wolves within reservation boundaries). In 2013–2014, the total quota was 275 wolves: A State-licensed quota of 251, and a Tribal offer of 24. That year, 257 wolves were harvested. The 2014–2015 wolf quota was reduced to 156 (a 57-percent reduction from the 2013–2014 wolf quota), and 154 wolves were harvested that season (a 60-percent decrease from the 2013–2014 harvest.

Evidence from Wisconsin indicates that active management with public harvests and targeted lethal depredation controls could reduce wolf–human conflicts without causing major declines in wolf numbers in the State. The minimum count of wolves in Wisconsin when they were delisted in 2012 was 815 wolves. After 3 years of public hunting and trapping seasons, they had been reduced to a minimum count of 746 in 2015, or a reduction of only 8.5 percent. During that same time period, verified wolf kills on cattle and the number of farms with verified depredations declined significantly (Wiedenhoeft et al. 2015, pp. 4–5, 12), indicating that active management with public harvests and targeted lethal depredation controls could reduce conflicts without causing significant declines in wolf numbers (Wydeven 2019a, in litt.).

Regardless of the methods used to manage wolves in the State, WI DNR is committed to maintaining a wolf population of 350 wolves outside of Indian reservations, which translates to a statewide population of 361 to 385 wolves in late winter. No harvest will be allowed if the wolf population falls below this goal (WI DNR 1999, pp. 15, 16). Also, the fact that the Wisconsin Plan calls for State relisting of the wolf as a threatened species if the population falls to fewer than 250 for 3 years provides a strong assurance that any public harvest is not likely to threaten the persistence of the population (WI DNR 1999, pp. 15–17). Based on wolf population data, the current Wisconsin Plan and the 2006 updates, we conclude that any public harvest plan will continue to maintain the State wolf population well above the Federal recovery goal of 100 wolves.

The Michigan Wolf Management Plan—The 2015 updated Michigan Plan describes the wolf recovery goals and management actions needed to maintain a viable wolf population in the Upper Peninsula of Michigan, while facilitating wolf-related benefits and minimizing conflicts. The updated Michigan Plan contains new scientific information related to wolf management, updated information on the legal status of wolves, clarifications related to management authorities and decisionmaking, and updated strategic goals, objectives, and management actions informed by internal evaluation and responses and comments received from stakeholders. The updated plan retains the four principal goals of the 2008 plan, which are to ''(1) maintain a viable Michigan wolf population above a level that would warrant its classification as threatened or endangered (more than 200 wolves); (2) facilitate wolf-related benefits; (3) minimize wolf-related conflicts; and (4) conduct science-based wolf management with socially acceptable methods'' (MI DNR 2015, p. 16). The Michigan Plan details wolf-management actions, including public education and outreach activities, biennial wolf population and health monitoring, research, depredation control, ensuring adequate legal protection for wolves, and prey and habitat management. The Michigan Plan does not address wolf management within Isle Royale National Park, where the wolf population is fully protected by the National Park Service.

As with the Wisconsin Plan, the MI DNR has chosen to manage the State's wolves as though they are an isolated

[5] A population that is part of a larger population or metapopulation.

population that receives no genetic or demographic benefits from immigrating wolves, even though their population will continue to be connected with populations in Minnesota, Wisconsin, and Canada. The Michigan wolf population must exceed 200 wolves in order to achieve the Plan's first goal of maintaining a viable wolf population in the Upper Peninsula. This number is consistent with the Federal Revised Recovery Plan's definition of a viable, isolated wolf population (USFWS 1992, p. 25). The Michigan Plan, however, clearly states that 200 wolves is not the target population size, and that a larger population may be necessary to meet the other goals of the Plan. Therefore, the State will maintain a wolf population that will ''provide all of the ecological and social benefits valued by the public'' while ''minimizing and resolving conflicts where they occur'' (MI DNR 2015, p. 17). We strongly support this approach, as it provides assurance that a viable wolf population will remain in the Upper Peninsula regardless of the future fate of wolves in Wisconsin or Ontario.

The Michigan plan also addresses the need for wolf recovery and the strategic management direction in the Lower Peninsula. The plan states wolves will not be prevented from colonizing the Lower Peninsula, but their presence is not necessary to maintain a viable population in the State (Ml DNR 2015, p. 39). Additionally, if wolves occupy the Lower Peninsula, the higher density of human residences and livestock operations in that area relative to the Upper Peninsula would create a greater potential for wolf-related conflicts. The severity, immediacy, and frequency of conflicts would guide management responses in the Lower Peninsula (Ml DNR 2015, p. 39).

The Michigan Plan identifies wolf population monitoring as a priority activity, and specifically states that the MI DNR will monitor wolf abundance every other year for at least 5 years post-delisting (MI DNR 2015, p. 26). This includes monitoring to assess wolf presence in the northern Lower Peninsula. From 1989 through 2006, the MI DNR attempted to count wolves throughout the entire Upper Peninsula. As the wolf population increased, this method became more difficult. In the winter of 2006–2007, the MI DNR implemented a new sampling approach based on an analysis by Potvin et al. (2005, p. 1668) to increase the efficiency of the State survey. The new approach is based on a geographically based stratified random sample and produces an unbiased, regional estimate of wolf abundance. The Upper Peninsula was stratified into 21 sampling units; each sampling unit was assigned to one of three strata based on geographic location and relative wolf density. The MI DNR intensively surveys roughly 60 percent of the Upper Peninsula every other year. Computer simulations have shown that such a geographically stratified monitoring program would produce unbiased and precise estimates of the total wolf population (Beyer in litt. 2006, see attachment by Drummer; Lederle in litt. 2006; Roell et al. 2009, p. 3).

Another component of wolf population monitoring is monitoring wolf health. The MI DNR will continue to monitor the impact of parasites and disease on the viability of wolf populations in the State through necropsies of dead wolves and analyzing biological samples from captured live wolves. Prior to 2004, MI DNR vaccinated all captured wolves for canine distemper and parvovirus and treated them for mange. These inoculations were discontinued to provide more natural biotic conditions and to provide biologists with an unbiased estimate of disease-caused mortality rates in the population (Roell in litt. 2005). Since diseases and parasites are not currently a significant threat to the Michigan wolf population, the MI DNR is continuing the practice of not actively managing disease. If monitoring indicates that diseases or parasites may pose a threat to the wolf population, the MI DNR would again consider more active management similar to that conducted prior to 2004 (MI DNR 2015, p. 35).

The Michigan Plan includes maintaining habitat and prey necessary to sustain a viable wolf population in the State as a management component. This includes maintaining prey populations required for a viable wolf population while providing for sustainable human uses, maintaining habitat linkages to allow for wolf dispersal, and minimizing disturbance at known, active wolf dens (MI DNR 2015, pp. 32–34).

To minimize illegal take, the Michigan Plan calls for enacting and enforcing regulations to ensure adequate legal protection for wolves in the State. Under State regulations, wolves could be classified as a threatened, endangered, game, or protected animal, all of which prohibit killing (or harming) the species except under a permit, license, or specific conditions. Michigan removed gray wolves from the State's threatened and endangered species list in 2009 and classified the species as a game animal in 2016. Game-animal status allows but does not require the establishment of a regulated harvest season. The Michigan Plan states that regulations would be reviewed, modified, or enacted as necessary to provide the wolf population with appropriate levels of protection with the following possible actions: (1) Reclassify wolves as endangered or threatened under State regulations if population size declines to 200 or fewer wolves; (2) review, modify, recommend, and/or enact regulations, as necessary, to ensure appropriate levels of protection for the wolf population; and (3) if necessary to avoid a lapse in legal protection, amend the Wildlife Conservation Order to designate wolves as a protected animal (MI DNR 2015, p. 28).

The Michigan Plan emphasizes the need for public information and education efforts that focus on living with a recovered wolf population and ways to manage wolves and wolf-human interaction (both positive and negative) (MI DNR 2015, pp. 22–25). The Plan also recommends continuing important research efforts, continuing reimbursement for depredation losses, minimizing the impacts of captive wolves and wolf-dog hybrids on the wild wolf population, and citizen stakeholder involvement in the wolf-management program (MI DNR 2015, pp. 27, 52–53, 55–56, 60).

The Michigan Plan calls for establishing a wolf-management stakeholder group that will meet annually to monitor the progress made toward implementing the Plan. Furthermore, the Plan will be reviewed and updated at 5-year intervals to address ''ecological, social, and regulatory'' changes (MI DNR 2015, pp. 60–61). The plan also addresses currently available and potential new sources of funding to offset costs associated with wolf management (MI DNR 2015, pp. 61–62). The MI DNR has long been an innovative leader in wolf-recovery efforts, exemplified by its initiation of the nation's first attempt to reintroduce wild wolves to vacant historical wolf habitat in 1974 (Weise et al. 1975). The MI DNR's history of leadership in wolf recovery and its repeated written commitments to ensure the continued viability of a Michigan wolf population above a level that would trigger State or Federal listing as threatened or endangered further reinforces that the 2015 Michigan Wolf Management Plan will provide adequate regulatory mechanisms for Michigan wolves. The DNR's primary goal remains to conduct management to maintain the wolf population in Michigan above the minimum size that is biologically required for a viable,

isolated population and to provide for ecological and social benefits valued by the public while resolving conflicts where they occur (MI DNR 2015, p. 16).

Depredation Control in Michigan—Data from Michigan show a general increase in confirmed events of wolf depredations on livestock over the past two decades, with an average of 2.5 events annually from 1998 through 2002, an average of 8 annually in 2003–2007; an average of 25 annually in 2008–2012; and an average of 14 annually in 2013–2017. Eighty-six percent of the depredation events were on cattle, with the rest on sheep, poultry, rabbits, goats, horses, swine, and captive deer (Roell et al. 2009, pp. 9, 11; Beyer in litt. 2018).

Michigan has not experienced as high a level of attacks on dogs by wolves as Wisconsin, although a slight increase in such attacks has occurred over the last decade (Ruid et al. 2009, pp. 284–285; Bump et al. 2013, pp. 1–2). Yearly losses vary, and actions of a single pack of wolves can be an important influence. In Michigan, there is not a strong relationship between wolf depredation on dogs and wolf abundance (Roell et al. 2010, p. 7). The number of dogs killed in the State during the 15 years from 1996 to 2010 totaled 34; that number increased to 55 during the 7-year period from 2011 through 2017 (Beyer in litt. 2018). The majority of the wolf-related dog deaths involved hounds used to hunt bears. The MI DNR guidelines for its depredation control program allow for lethal control as a management option on free-ranging hunting dogs when nonlethal methods are determined to be ineffective in specific areas where a wolf attack has been verified (MI DNR 2017, pp. 9–10). Lethal control of wolves will also be considered if wolves have killed confined pets and remain in the area where more pets are being held (MI DNR 2017, p. 10). In 2008, the Michigan Legislature passed a law that will allow dog owners or their designated agents to remove, capture, or, if deemed necessary, use lethal means to destroy a gray wolf that is in the act of preying upon the owner's dog, which includes dogs free roaming or hunting on public lands.

During the several years that lethal control of depredating wolves had been conducted in Michigan, there was no evidence of resulting adverse impacts to the maintenance of a viable wolf population in the Upper Peninsula. MI DNR and Wildlife Services killed 50 wolves in response to depredation events during the time period when permits or special rules were in effect or while wolves were not on the Federal List of Endangered and Threatened Wildlife (Roell et al. 2010, p. 8). In 2008, Michigan passed two House bills that will become effective after Federal delisting. These bills authorize a livestock or dog owner (or a designated agent) to ''remove, capture, or use lethal means to destroy a wolf that is in the act of preying upon'' the owner's livestock or dog. During the 2 months that wolves were federally and State delisted in 2009, no wolves were killed under these authorizations; 15 wolves were killed under these authorities from 2012 through 2014 (Beyer in litt. 2018). The numbers of wolves killed each year for depredation control (livestock and dogs) are as follows: 4 (2003), 5 (2004), 2 (2005), 7 (2006), 14 (2007), 8 (2008), 1 (during 2 months in 2009), 18 (2012), 10 (2013), and 13 (2014) (Beyer et al. 2006, p. 88; Roell in litt. 2006, p. 1; Roell et al. 2010, p. 19; Beyer in litt. 2018). This represents 0.2 percent (2009) to 2.8 percent (2007) of the Upper Peninsula's late-winter population of wolves during the previous winter. During the years where depredation control took place absent a regulated public harvest, the wolf population increased from 2 percent (2007–2008) to 17 percent (2006–2007) despite the level of depredation control, demonstrating that the wolf population continues to increase at a healthy rate (Huntzinger et al. 2005, p. 6; MI DNR 2006, Roell et al. 2009, p. 4).

Post-delisting Depredation Control in Michigan—Following Federal delisting, wolf depredation control in Michigan will be carried out according to the 2015 Michigan Wolf Recovery and Management Plan (MI DNR 2015) and any Tribal wolf-management plans that may be developed in the future for reservations in occupied wolf range.

To provide depredation-control guidance when lethal control is an option, MI DNR has developed detailed instructions for incident investigation and response (MI DNR 2017). Verification of wolf depredation incidents will be conducted by MI DNR or Wildlife Services personnel (working under a Cooperative Service Agreement or at the request of a Tribe, depending on the location) who have been trained in depredation investigation techniques. The MI DNR specifies that the verification process will use the investigative techniques that have been developed and successfully used in Minnesota by Wildlife Services (MI DNR 2017, Append. B, pp. 13–14). Following verification, one or more of several options will be implemented to address the depredation problem. Technical assistance, consisting of advice or recommendations to reduce wolf conflicts, will be provided. Technical assistance may also include providing to the landowner various forms of noninjurious behavior modification materials, such as flashing lights, noise makers, temporary fencing, and fladry.

Trapping and translocating depredating wolves has been used in the past, resulting in the translocation of 23 Upper Peninsula wolves during 1998–2003 (Beyer et al. 2006, p. 88), but as with Wisconsin, suitable relocation sites are becoming rarer, and there is local opposition to the release of translocated depredators. Furthermore, none of the past translocated depredators have remained near their release sites, making this a questionable method to end the depredation behaviors of these wolves (MI DNR 2005a, pp. 3–4). Therefore, reducing depredation problems by relocation is no longer recommended as a management tool in Michigan (MI DNR 2008, p. 57).

Lethal control of depredating wolves is likely to be the most common future response in situations when improved livestock husbandry and wolf-behavior-modification techniques (for example, flashing lights, noisemaking devices) are judged to be inadequate. In a previous application for a lethal take permit under section 10(a)(1)(A) of the Act, MI DNR received authority to euthanize up to 10 percent of the late-winter wolf population annually (MI DNR 2005b, p. 1). However, when Michigan had the authority to use lethal means to manage depredations, not more than 3 percent of the population was removed in any year, indicating that it is likely that significantly less than 10 percent of the population will be removed annually over the next several years.

The Michigan Plan provides recommendations to guide management of various conflicts caused by wolf recovery, including depredation on livestock and pets, human safety, and public concerns regarding wolf impacts on other wildlife. We view the Michigan Plan's depredation and conflict control strategies to be conservative, in that they commit to nonlethal depredation management whenever possible, oppose preventative wolf removal where problems have not yet occurred, encourage incentives for best management practices that decrease wolf-livestock conflicts without affecting wolves, and support closely monitored and enforced take by landowners of wolves ''in the act of livestock depredation'' or under limited permits if depredation is confirmed and nonlethal methods are determined to be ineffective. Based on these components of the revised Michigan Plan and the stated goal for maintaining wolf

populations at or above recovery goals, the Service concludes that any wolf-management changes implemented following delisting will not be implemented in a manner that results in significant reductions in Michigan wolf populations. The MI DNR remains committed to ensuring a viable wolf population above a level that would trigger relisting as either threatened or endangered in the future (MI DNR 2015, p. 8).

Michigan livestock owners are compensated when they lose livestock as a result of a confirmed wolf depredation. The Michigan Wildlife Depredations Indemnification Act (Public Act 487 of 2012) provides payment to livestock owners, but it may do so only if the MI DNR or its designated agent (Wildlife Services) verifies the depredation was caused by wolves, coyotes, or cougars. If the investigator cannot rule out wolves as the cause for the missing animals and the farm has had ''verified'' wolf depredation in the past, the owner is eligible to receive indemnification payment from the Michigan Department of Agriculture and Rural Development (MI DNR 2017, p. 2). Compensation payments are made for livestock included in the claim at 100 percent of the fair market value not to exceed $4,000 for each animal. Livestock includes, but is not limited to, cattle, sheep, new world camelids, goats, bison, privately owned cervids, ratites, swine, equine, poultry, aquaculture, and rabbits. Livestock does not include dogs and cats (MI DNR 2017, pp. 2, 8).

Funding for depredation payments and, more recently, missing animal claims has changed over time. From 2001 through 2010 a supplemental fund provided by Defenders of Wildlife was used to make up the difference between State compensation and fair market value. This fund paid $10,053 to Michigan farmers. Currently, the State uses a general fund appropriate to pay depredation and missing animal claims. From 1998 through 2018, the State has paid $179,486 to Michigan farmers for losses due to wolves.

Post-delisting Regulated Harvest in Michigan—Although the Michigan Plan itself does not determine whether a public harvest will be used as a management strategy, it does discuss developing ''socially and biologically responsible management recommendations regarding public harvest of wolves'' (MI DNR 2015, p. 56). The Michigan Plan discusses developing recommendations regarding public harvest for two separate purposes: To reduce wolf-related conflicts and for reasons other than managing wolf-related conflicts (*e.g.,* recreational and utilitarian purposes). With regard to implementing a public harvest for recreational or utilitarian purposes, the Michigan Plan identifies the need to gather and evaluate biological and social information, including the biological effects and the public acceptability of a general wolf harvest (MI DNR 2015, p. 60). A public harvest during a regulated season requires that wolves be classified as game animals in Michigan (they were classified as such in 2016). With wolves classified as game animals, the Michigan Natural Resources Commission (NRC) has the exclusive authority to enact regulations pertaining to the methods and manner of public harvest. Although any decisions regarding establishment of a harvest season will be made by the NRC, the MI DNR would be called upon to make recommendations regarding socially and biologically responsible public harvest of wolves. Michigan held a regulated public hunting season in 2013 that took into consideration the recommendations of the MI DNR, which were based on the State management plan. From those recommendations, the Michigan NRC established quotas for that season based on zones in the Upper Peninsula, with a quota of 16 wolves in the far western part of the peninsula, 19 in 4 central counties, and 8 in the eastern part of the peninsula. Twenty-two wolves were taken during that 2013 season.

State Management in the West Coast States

Wolves are classified as endangered under the Washington State Endangered Species Act (WAC 220–610–010). Unlawful taking (when a person hunts, fishes, possesses, maliciously harasses, or kills endangered fish or wildlife, and the taking has not been authorized by rule of the commission) of endangered fish or wildlife is prohibited in Washington (RCW 77.15.120). Wolves in California are similarly classified as endangered under the California Endangered Species Act (CESA; California Fish and Game Commission 2014, entire). Under CESA, take (defined as hunt, pursue, catch, capture, kill, or attempts to hunt, pursue, catch, capture, or kill) of listed wildlife species is prohibited (California Fish and Game Codes section 86 and section 2080). Wolves in Oregon have achieved recovery objectives and were delisted from the State Endangered Species Act in 2015. Wolves in Oregon remain protected by the State Plan and its associated regulation (Oregon Administrative Rule 665–110), and Oregon's wildlife policy. The wildlife policy guides long-term management and states ''that wildlife shall be managed to prevent the serious depletion of any indigenous species'' and includes seven management goals (ODFW 2019, p. 6, referencing ORS 496.012). There are no current plans to initiate a hunting season, and regulatory mechanisms remain in place through the State Plan and Oregon statute to ensure a sustainable wolf population. Controlled take of wolves, including a future hunting season, by the State of Oregon would require Oregon Fish and Wildlife Commission approval through a public rulemaking process (ODFW 2019, p. 31).

Oregon, Washington, and California also have adopted wolf-management plans intended to provide for the conservation and reestablishment of wolves in these States (ODFW 2019, entire; Wiles et al. 2011, entire; CDFW 2016a, entire; 2016b, entire). These plans include population objectives, education and public outreach goals, damage-management strategies, and monitoring and research plans. Wolves will remain on State endangered species lists in Washington and California until recovery objectives have been reached. Once recovery objectives have been achieved, we anticipate that the States will initiate processes for delisting wolves. Once the species is removed from State endangered species lists, the States will have the authority to consider the use of regulated harvest to manage wolf populations. All three State plans recognize that management of livestock conflicts is a necessary component of wolf management (ODFW 2019, pp. 33–55; Wiles et al. 2011, p. 72; CDFW 2016a, p. 4). Control options are currently limited to preventative and nonlethal methods within the federally listed portions of Oregon, Washington, and California. Following Federal delisting, guidelines outlined in each State's plan, or developed through a collaborative stakeholder process, will define the conditions under which depredating wolves can be lethally removed by agency officials (CDFW 2016b, pp. 278–285; ODFW 2019, pp. 41–54; Wiles et al. 2011, pp. 72–94).

The Oregon Wolf Management Plan—The Oregon Wolf Conservation and Management Plan was developed prior to wolves becoming established in Oregon. The plan, first finalized in 2005, contains provisions that require it to be updated every 5 years. The first revision occurred in 2010, and a second revision was recently completed in June of 2019. The ODFW is required by State regulations to follow the Oregon Wolf Conservation and Management Plan. The Plan includes program direction,

objectives, and strategies to manage gray wolves in Oregon and defines the gray wolf's special status game mammal designation (Oregon Administrative Rule 635–110). The Plan defines the following objectives for continued conservation of the gray wolf in Oregon:

- Continue to promote a naturally reproducing wolf population in suitable habitat within Oregon, which is connected to a larger source population of wolves, allowing for continued expansion into other areas of the State.
- Maintain a conservation population objective for both East and West Wolf Management Zones (WMZs) of four breeding pairs of wolves present for 3 consecutive years.
- Maintain a management population objective for each zone of a minimum of seven breeding pairs of wolves present for 3 consecutive years.
- Maintain a management regime in the West WMZ that simulates Oregon Endangered Species Act protections until the conservation population objective is met.
- Identify and monitor potential conservation threats to Oregon wolves and, if feasible, implement measures to reduce threats that can negatively affect Oregon's wolf population.
- Effectively and responsibly address conflict with competing human values while using management measures that are consistent with long-term wolf conservation in all phases of wolf management status under the Plan.
- Maintain accurate information on the population status and distribution of wolves in Oregon through a comprehensive monitoring program.
- Continue to coordinate with other agencies and organizations to achieve wolf conservation and management objectives.

The Oregon plan includes two management zones that roughly divide the State into western and eastern halves. This division line is further to the west of the line that delineates the listed and non-listed portions of Oregon. Each zone has a separate ''management population objective'' of seven breeding pairs (ODFW 2019, p. 8). Within each zone, management phases (Phase I, Phase II, and Phase III) are used to assess population objectives, which in turn influence conservation and management objectives.

Phase I includes a conservation population objective of obtaining four breeding pairs for 3 consecutive years; upon reaching this objective, delisting of wolves statewide may be initiated. The ODFW defines a breeding pair as a pack of wolves with an adult male, an adult female, and at least two pups surviving to the end of December (ODFW 2019, p. 1). This population objective was met in 2014 in the eastern WMZ, and wolves were State delisted in Oregon in 2015. Wolves in the eastern WMZ were then managed under Phase II (ODFW 2019, p. 6). Wolves in the western WMZ have yet to reach this conservation objective. Despite State delisting, wolves in the western WMZ (currently in Phase I) are still managed with a level of protection comparable to that of Oregon Endangered Species Act protections for wolves.

Phase II management actions work towards a management population objective of seven breeding pairs in the eastern management zone for 3 consecutive years. During this phase, populations are managed to prevent declines that could result in relisting under the Oregon ESA. This Phase II management population objective was met in 2016, which resulted in the transition of management to Phase III for the eastern WMZ in 2018 (ODFW 2019, p. 11).

Phase III acts to set a balance such that populations do not decline below Phase II objectives, but also do not reach unmanageable levels resulting in conflicts with other land uses. Phase III is a maintenance phase. While the 2019 plan does not include a minimum or maximum population level for wolves in Oregon, the plan leaves room for development of population thresholds in future planning efforts (ODFW 2019, pp. 10, 15–17). Phase III of the 2019 plan provides management flexibility in the case of depredating wolves (ODFW 2019, pp. 31–32). Currently, hunting of wolves is not permitted in Oregon and, as noted above, would require a public rulemaking process conducted by the Oregon Fish and Game Commission.

The Washington Wolf Management Plan—The 2011 Wolf Conservation and Management Plan for Washington was developed in response to the State endangered status for the species, and the expectations that the wolf population in Washington would continue to increase through natural dispersal of wolves from adjacent populations, and anticipation of the return of wolf management to the State after Federal delisting. The purpose of the plan is to facilitate reestablishment of a self-sustaining population of gray wolves in Washington and to encourage social tolerance for the species by addressing and reducing conflicts. An advisory Wolf Working Group was appointed at the outset to give recommendations on the plan. In addition, the plan underwent extensive peer and public review prior to finalization.

The Washington Plan provides recovery goals for downlisting and delisting the species under Washington State law, and identifies strategies to achieve recovery and manage conflicts with livestock and ungulates. Recovery objectives are defined as numbers of successful breeding pairs that are maintained on the landscape for 3 consecutive years, with a set geographic distribution within three specified recovery regions: (1) Eastern Washington; (2) Northern Cascades; and (3) Southern Cascades and Northwest Coast (Wiles et al. 2011, p. 60 figure 9). A successful breeding pair of wolves is defined in the Washington Plan as an adult male and an adult female with at least two pups surviving to December 31 in a given year (Wiles et al. 2011, p. 58). Specific target numbers and distribution for downlisting and delisting within the three recovery regions identified in the Washington Plan are as follows:

- To reclassify from State endangered to State threatened status: A minimum of six successful breeding pairs with a minimum of two successful breeding pairs in each of the three recovery regions documented for 3 consecutive years.
- To reclassify from State threatened to State sensitive status: A minimum of 12 successful breeding pairs with a minimum of 4 successful breeding pairs in each of the 3 recovery regions documented for 3 consecutive years.
- To delist from State sensitive status: Four successful breeding pairs documented for 3 consecutive years in each of the three recovery regions plus an additional three successful breeding pairs anywhere in the State.

In addition to the delisting objective of 15 successful breeding pairs distributed in the 3 geographic regions for 3 consecutive years, an alternative delisting objective was also established whereby the gray wolf will be considered for delisting when 18 successful breeding pairs are present, with 4 successful breeding pairs in the Eastern Washington region, 4 successful breeding pairs in the Northern Cascades region, 4 successful breeding pairs distributed in the Southern Cascades and Northwest Coast region, plus an additional 6 successful breeding pairs anywhere in the State in a single year.

The WDFW recently initiated work to develop a post-recovery wolf management plan that would guide the long-term conservation and management of the species in the State. After wolves have reached recovery levels and are delisted at the State level, wolves could be reclassified as a game animal through the Washington Fish and Wildlife Commission's public

process (Wiles et al. 2011, pp. 70–71). Any proposals to initiate a hunting season for wolves in Washington after State delisting would be consistent with maintaining a recovered wolf population in the State and would go through a public process with the Fish and Wildlife Commission (Wiles et al. 2011, pp. 70–71).

The California Wolf Management Plan—The 2016 *Conservation Plan for Gray Wolves in California* was developed in anticipation of the return of wolves to California (CDFW 2016a, p. 2). The CDFW worked with stakeholder groups in 2014 and 2015 during plan development (CDFW 2016a, pp. 2–3). Stakeholders included local government, nongovernmental organizations, State agencies and organizations, and Federal agencies. During the planning process, CDFW and the stakeholders identified sideboards (*e.g.,* guidelines) and plan goals to direct development of the State plan (CDFW 2016a, p. 3). The sideboards included direction to develop alternatives for wolf management, specified that CDFW would not reintroduce wolves to California, and acknowledged that historical distribution and abundance are not achievable (CDFW 2016a, pp. 3–4). The goals include the conservation of biologically sustainable populations, management of wolf distribution, management of native ungulates for wolf and human uses, management of wolves to minimize livestock depredations, and public outreach (CDFW 2016a, p. 4).

The California Plan recognizes that wolf numbers in the State will increase with time, and that the plan needs to be flexible to account for information that is gained during the expansion of wolves into the State (CDFW 2016a, pp. 19–24). Similar to plans for other States, the California Plan uses a three-phase strategy for wolf conservation and management.

Phase I is a conservation-based strategy to account for the reestablishment of wolves under both State and Federal Endangered Species Acts (CDFW 2016a, pp. 21–22). Phase I will end when there are four breeding pairs for 2 consecutive years in California. The CDFW defines a breeding pair as at least one adult male, one adult female, and at least two pups that survive to the end of December (CDFW 2016a, p. 21). California is currently in Phase I of the plan, with the Lassen Pack as the only breeding pair present for 2 consecutive years.

Phase II is expected to represent a point at which California's wolf population is growing more through reproduction of resident wolves than by dispersal of wolves from other States (CDFW 2016a, p. 22). This phase will conclude when there are eight breeding pairs for 2 consecutive years. During Phase II, CDFW anticipates gaining additional information and experience with wolf management, which will help inform future revisions to the State plan. During Phase II, managing wolves for depredation response or predation on wild ungulates may be initiated.

Phase III is less specific due to the limited information available to CDFW at the time of plan development (CDFW 2016a, p. 22). This phase moves toward longer term management of wolves in California. Specific aspects of Phase III are more likely to be developed during Phase II when more information on wolf distribution and abundance in the State are available. Towards the end of Phase II and the beginning of Phase III, information should be available to inform a status review of wolves in California to determine if continued State listing as endangered is warranted (CDFW 2016a, p. 22). Currently, hunting of wolves is not permitted in California.

State Management in the Central Rocky Mountains

Post-Delisting Management in Colorado—Gray wolves are listed as an endangered species by the State of Colorado and receive protection under Colorado Revised Statutes (CRS) 33–6–109), thereby making it illegal for any person to hunt, take, or possess a gray wolf in the State. Wolves in Colorado will remain listed at the State level after they are federally delisted.

Recognizing the potential for increasing numbers of wolves to enter Colorado from growing populations in neighboring States, Colorado Parks and Wildlife convened a multidisciplinary Wolf Management Working Group in 2004 to formulate management recommendations for wolves that naturally enter and possibly begin to recolonize the State. The working group did not evaluate what would constitute wolf recovery in Colorado; thus, no recovery objectives or thresholds were defined. The working group recommended that wolves that enter or begin to recolonize the State should be free to occupy available suitable habitat, but that wolf distribution should ultimately be defined by balancing the ecological needs of the wolf with the social aspects of wolf management (Colorado Wolf Management Working Group 2004, pp. 1, 3–5). The working group's recommendations provided information on all aspects of wolf management including monitoring, enforcement, research, information and education, the conservation and management of prey populations, and funding. Although the working group's recommendations are not a formal management plan, in 2005 they were adopted by the Colorado Parks and Wildlife Commission, a citizen board appointed by the Governor which develops regulations and policies for State parks and wildlife programs. The working group's recommendations were reaffirmed in 2016 (CPWC, PWCR 16–01–2016) and will be used to guide management of wolves that occur in or naturally enter Colorado post-delisting until a wolf conservation and management plan is developed.

In 2019, wolf proponents collected signatures in the hopes of getting an initiative on the 2020 ballot to reintroduce wolves into Colorado. Over 210,000 signatures were submitted to the Secretary of State in December 2019, and in January 2020, the Secretary of State determined that enough valid signatures were collected to place initiative 107 on the 2020 ballot. If passed, the Colorado Gray Wolf Reintroduction Initiative would require the Colorado Parks and Wildlife Commission to create and implement a plan to reintroduce gray wolves into Colorado west of the Continental Divide by December 2023. As a result of the pending ballot initiative and the fact that, until recently, no groups of wolves had been confirmed in Colorado, the Colorado Parks and Wildlife Commission chose not to initiate development of a wolf management plan until after the 2020 election, when it expects to have clearer management direction.

Under Title 35 of the Colorado Revised Statutes, the Colorado Department of Agriculture is responsible for the control of depredating animals in the State, with the exception of at-risk species such as gray wolves. Before the Colorado Department of Agriculture adopts any rules concerning the take of depredating, at-risk species, the rules must be approved by the Colorado Parks and Wildlife Commission.

There are currently no plans to initiate a wolf hunting season in Colorado after wolves are federally delisted. Regulated harvest may be considered during the future development of a wolf conservation and management plan. However, prior to implementing any hunting seasons, the State of Colorado would require Colorado Parks and Wildlife Commission approval through a public rulemaking process.

Post-Delisting Management in Utah—Gray wolves are considered a Tier 1 sensitive species under Utah

Administrative Rule (Rule R657–48) and receive protections under Utah Code (Section 23–20–3) that prohibits the taking of protected wildlife, except as authorized by the Wildlife Board. Wolves are also classified as furbearers and Utah Code (Section 23–18–2) prohibits furbearer take without a license or otherwise in violation of rules promulgated by the Wildlife Board. At present, there is no season or take authorized for wolves in the federally listed portion of Utah. However, authorized personnel may lethally control wolves to mitigate wolf conflicts with livestock in the federally delisted portion of the State.

In 2003, the Utah Legislature passed House Joint Resolution 12, which directed UDWR to draft a wolf management plan for review, modification, and adoption by the Utah Wildlife Board, through the Regional Advisory Council process. In April 2003, the Utah Wildlife Board directed UDWR to develop a proposal for a wolf working group to assist the agency in this endeavor. The UDWR created the Wolf Working Group in the summer of 2003. The Wolf Working Group was composed of 13 members that represented diverse public interests regarding wolves in Utah.

On June 9, 2005, the Utah Wildlife Board formally approved the Utah Wolf Management Plan (UDWR and Utah Wolf Working Group 2005). The goal of the Plan is to manage, study, and conserve wolves moving into Utah while avoiding conflicts with the elk and deer management objectives of the Ute Indian Tribe; minimizing livestock depredation; and protecting wild ungulate populations in Utah from excessive wolf predation. In 2010, to prevent the establishment of wolves in the federally listed portion of Utah, the Utah Legislature directed the UDWR to prevent the establishment of any packs of wolves in the delisted portion of Utah until wolves are federally delisted in the entirety of the State (S.B. 36, Wolf Management Act). This law supersedes Utah's Wolf Management Plan. To comply with S.B. 36, the UDWR is tasked with preventing wolves from becoming established in the delisted portion of the State. The State of Utah intends to fully implement the Utah Wolf Management Plan when wolves are delisted across all of Utah (S.B. 36; UDWR and Utah Wolf Working Group 2005, p. 28).

Wolves were federally delisted in a small portion of north-central Utah, along with the remainder of the northern Rocky Mountain wolf population (with the exception of Wyoming), in 2011 (76 FR 25590, May 5, 2011). In 2015, the Utah Wildlife Board extended the Plan through 2020 and it recently reapproved the Plan through 2030. However, the Plan will not be implemented until wolves are federally delisted statewide, at which time the Plan will guide management of wolves until 2030; until wolves become established (defined as at least two breeding pairs for two consecutive years) in Utah; or until the political, social, biological, or legal assumptions of the plan change, whichever occurs first.

The Utah Plan recognizes that concerns about livestock depredation by wolves can effectively be addressed using both nonlethal and lethal management tools (UDWR and Utah Wolf Working Group 2005, pp. 35–39). The Plan recommends a compensation program for livestock owners who experience loss due to wolves (UDWR and Utah Wolf Working Group 2005, pp. 35–39). At present, the UDWR may consider lethal control to mitigate wolf conflicts with livestock only in the federally delisted portion of the State. Under Utah Administrative Code (Rule R657–24), the State may compensate livestock producers for confirmed losses caused by wolves in those areas of the State where wolves are federally delisted.

Post-delisting, the provisions of Utah's Wolf Management Plan will be fully implemented. Gray wolves will be removed from the sensitive species list, but will remain classified as a furbearer species with a closed season. Regulated take of gray wolves may be considered when wolves have established themselves in the State (*i.e.,* when there are at least two breeding pairs for two consecutive years). Any harvest recommendations will be vetted through the public process via the Regional Advisory Councils and must be approved by the Wildlife Board. Lethal control may be considered statewide to mitigate wolf conflicts with livestock and all livestock producers in the State that experience confirmed wolf-caused livestock losses would be eligible for compensation.

Tribal Management and Conservation of Wolves

In the western Great Lakes area, Native American Tribes and inter-Tribal resource-management organizations have indicated to the Service that they will continue to conserve wolves on most, and probably all, Native American reservations in the primary wolf areas. The wolf retains great cultural significance and traditional value to many Tribes and their members, and to retain and strengthen cultural connections, many Tribes oppose unnecessary killing of wolves on reservations and on ceded lands, even following any Federal delisting (Hunt in litt. 1998; Schrage in litt. 1998a; Schlender in litt. 1998). Some Native Americans view wolves as competitors for deer and moose, whereas others are interested in harvesting wolves as furbearers (Schrage in litt. 1998a). Many Tribes intend to sustainably manage their natural resources, wolves among them, to ensure that they are available to their descendants. The Red Lake Band of Chippewa (Minnesota), the Red Cliff Band of Lake Superior Chippewa (Wisconsin), the Bad River Band of Lake Superior Chippewa (Wisconsin), the Little Traverse Bay Band of Odawa Indians (Michigan), the Fond du Lac Band of Lake Superior Chippewa (Minnesota), and the Keweenaw Bay Indian Community (Michigan) have developed wolf monitoring and/or management plans. The Service has also awarded a grant to the Ho-Chunk Nation to identify wolf habitat on Tribal lands. Although not all Tribes with wolves that visit or reside on their reservations have completed management plans specific to the wolf, several Tribes have passed resolutions or otherwise informed us that they have no plans or intentions to allow commercial or recreational hunting or trapping of the species on their lands after Federal delisting.

As a result of many contacts with, and recent and previous written comments from, the Midwestern Tribes and their inter-Tribal natural-resource-management agencies—the Great Lakes Indian Fish and Wildlife Commission, the 1854 Authority, and the Chippewa Ottawa Treaty Authority—it is clear that their predominant sentiment is strong support for the continued protection of wolves at a level that ensures occupancy of wolves on reservations and throughout the treaty-ceded lands surrounding the reservations. While several Tribes stated that their members may be interested in killing small numbers of wolves for spiritual or other purposes, we expect that these activities would have a negligible effect on reservation or ceded-territory wolf populations.

The Red Lake Band of Chippewa Indians (Minnesota) completed a wolf-management plan in 2010 (Red Lake Band of Chippewa Indians 2010). A primary goal of the management plan is to maintain wolf numbers at a level that will ensure the long-term survival of wolves on Red Lake lands. Key components of the plan are habitat management, public education, and law enforcement. To address human-wolf interactions, the plan outlines how

wolves may be taken on Red Lake lands. Wolves thought to be a threat to public safety may be harassed at any time, and if they must be killed, the incident must be reported to Tribal law enforcement. Livestock are not common on Red Lake lands, and wolf-related depredation on livestock or pets is unlikely to be a significant management issue. If such events do occur, Tribal members may protect their livestock or pets by lethal means, but ''all reasonable efforts should be made to deter wolves using non-lethal means'' (Red Lake Band of Chippewa Indians 2010, p. 15). Hunting or trapping of wolves on Tribal lands will be prohibited.

The Red Cliff Band (Wisconsin) has strongly opposed State and Federal delisting of the gray wolf. Red Cliff implemented a Wolf Protection Plan in 2015 (Red Cliff Band of Lake Superior Chippewa 2015, entire). The plan guides management of wolves on the Reservation and prohibits any hunting of wolves during any future harvests. The plan calls for increased research and monitoring of wolves on the Bayfield Peninsula, which may help guide the management and protection of gray wolves when delisted. The plan includes a 6-mile (9.7-km) buffer outside of Reservation boundaries, in which Red Cliff will work cooperatively to mitigate human-wolf conflicts. Implementation of the plan includes: Collaring and monitoring local packs, seeking Federal grants for prevention and compensation for wolf depredation events on the Bayfield Peninsula, education, and outreach.

The Bad River Band of Lake Superior Chippewa established a Ma'iingan (Wolf) Management Plan for the Reservation in 2013 (Bad River Band of Chippewa Indians Natural Resource Department 2013, entire). The Bad River Band has been involved in wolf monitoring on the Reservation since 1997. During the period of 2010–2018, from 5 to 17 wolves were counted on the reservation in 2 or 3 packs (Bad River Band Natural Resource Department). The Tribe acknowledges the cultural significance of the Ma'iingan to the Anishinabe in all wolf management activities, and wolves (Ma'iingan) will be listed as a ''Tribally Protected Species'' on the Bad River Reservation after Federal delisting. The Tribe set a minimum wolf population goal of two packs of at least three wolves on the Reservation and will manage wolves in a way that minimizes human-wildlife conflicts on and around the Reservation.

In 2009, the Little Traverse Bay Bands of Odawa Indians (LTBB) finalized a management plan for the 1855 Reservation and portions of the 1836 ceded territory in the northern Lower Peninsula of Michigan (Little Traverse Bay Bands of Odawa Indians Natural Resource Department 2009). The plan provides the framework for managing wolves on the LTBB Reservation with the goal of maintaining a viable wolf presence on the LTBB Reservation or within the northern Lower Peninsula should a population become established by (1) prescribing scientifically sound biological strategies for wolf management, research, and monitoring; (2) addressing wolf-related conflicts; (3) facilitating wolf-related benefits; and (4) developing and implementing wolf-related education and public information.

The Fond du Lac Band (Minnesota) of Lake Superior Chippewa believes that the ''well-being of the wolf is intimately connected to the well-being of the Chippewa People'' (Schrage in litt. 2003). In 1998, the Band passed a resolution opposing Federal delisting and any other measure that would permit trapping, hunting, or poisoning of the wolf (Schrage in litt. 1998b; in litt. 2003; 2009, pers. comm.). If the prohibition of trapping, hunting, or poisoning is rescinded, the Band's Resource Management Division would coordinate with State and Federal agencies to ensure that any wolf hunting or trapping would be ''conducted in a biologically sustainable manner'' (Schrage in litt. 2003). The band finalized a wolf management plan for the Fond du Lac Reservation in 2012. A primary goal of the management plan is to maintain gray wolf numbers at levels that will contribute to the long-term survival of the species. The plan expresses the Tribe's belief that humans and wolves need to coexist, in accordance with the Band's traditions and customs and, thus, also recognizes that a system must be developed to deal with concerns for human safety and instances of depredation by wolves on livestock and pets.

The Tribal Council of the Leech Lake Band of Minnesota Ojibwe (Council) approved a resolution that describes the sport and recreational harvest of wolves as an inappropriate use of the animal. That resolution supports limited harvest of wolves to be used for traditional or spiritual uses by enrolled tribal members if the harvest is done in a respectful manner and would not negatively affect the wolf population. The Leech Lake Reservation was home to an estimated 60 wolves (*http://www.llojibwe.org/drm/fpw/wolf.html,* accessed 12/17/2019), although more recent survey data are not available.

The Menominee Indian Tribe of Wisconsin is committed to establishing a self-sustaining wolf population, continuing restoration efforts, ensuring the long-term survival of the wolf in Menominee, placing emphasis on the cultural significance of the wolf as a clan member, and resolving conflicts between wolves and humans. The Tribe has shown a great deal of interest in wolf recovery and protection. In 2002, the Tribe offered their Reservation lands as a site for translocating seven depredating wolves that had been trapped by WI DNR and Wildlife Services. Tribal natural resources staff participated in the soft release of the wolves on the Reservation and helped with the subsequent radio-tracking of the wolves. Although by early 2005 the last of these wolves died on the reservation, the tribal conservation department continued to monitor another pair that had moved onto the Reservation, as well as other wolves near the reservation (Wydeven in litt. 2006). When the female of that pair was killed in 2006, Reservation biologists and staff worked diligently to raise the orphaned pups in captivity with the WI DNR and the Wildlife Science Center (Forest Lake, Minnesota) in the hope that they could later be released to the care of the adult male. However, the adult male died prior to pup release, and they were moved back to the Wildlife Science Center (Pioneer Press 2006). In 2010–2018 the reservation generally supported 7 to 16 wolves in 3 or 4 packs (Menominee Tribal Conservation Department). The Menominee Tribe continues to support wolf conservation and monitoring activities in Wisconsin.

The Keweenaw Bay Indian Community (Michigan) will continue to list the wolf as a protected animal under the Tribal Code following any Federal delisting, with hunting and trapping prohibited (Keweenaw Bay Indian Community 2019, in litt.). Furthermore, the Keweenaw Bay Community developed a management plan in 2013 that ''provides a course of action that will ensure the long-term survival of a self-sustaining, wild gray wolf (*Canis lupus*) population in the 1842 ceded territory in the western Upper Peninsula of Michigan'' (Keweenaw Bay Indian Community Tribal Council 2013, p. 1). The plan is written to encourage cooperation among agencies, communities, private and corporate landowners, special interest groups, and Michigan residents (Keweenaw Bay Indian Community 2019, in litt.). Several Midwestern Tribes have expressed concern that Federal delisting

would result in increased mortality of wolves on reservation lands, in the areas immediately surrounding the reservations, and in lands ceded by treaty to the Federal Government by the Tribes. In 2006, a cooperative effort among Tribal natural resource departments of several Tribes in Wisconsin, WI DNR, the Service, and Wildlife Services led to a wolf-management agreement for lands adjacent to several reservations in Wisconsin. The goal is to reduce the threats to reservation wolf packs when they are temporarily off the reservation. Other Tribes have expressed interest in such an agreement. This agreement, and additional agreements if they are implemented, provides supplementary protection to certain wolf packs in the Great Lakes area.

The Great Lakes Indian Fish and Wildlife Commission has stated its intent to work closely with the States to cooperatively manage wolves in the ceded territories in the core areas, and will not develop a separate wolf-management plan (Schlender in litt. 1998). Furthermore, the Voigt Intertribal Task Force of the Great Lakes Indian Fish and Wildlife Commission has expressed its support for strong protections for the wolf, stating ''[delisting] hinges on whether wolves are sufficiently restored and will be sufficiently protected to ensure a healthy and abundant future for our brother and ourselves'' (Schlender in litt. 2004).

According to the 1854 Authority, ''attitudes toward wolf management in the 1854 Ceded Territory run the gamut from a desire to see total protection to unlimited harvest opportunity.'' However, the 1854 Authority would not ''implement a harvest system that would have any long-term negative impacts to wolf populations'' (Edwards in litt. 2003). In comments submitted for our 2004 delisting proposal for a larger Eastern DPS of the gray wolf, the 1854 Authority stated that the Authority is ''confident that under the control of state and tribal management, wolves will continue to exist at a self-sustaining level in the 1854 Ceded Territory. Sustainable populations of wolves, their prey and other resources within the 1854 Ceded Territory are goals to which the 1854 Authority remains committed. As such, we intend to work with the state of Minnesota and other tribes to ensure successful state and tribal management of healthy wolf populations in the 1854 Ceded Territory'' (Myers in litt. 2004).

While there are few written tribal protections currently in place for wolves in the Great Lakes area, the highly protective and reverential attitudes held by tribal authorities and members have assured us that any post-delisting harvest of reservation wolves will be very limited and will not adversely affect the delisted wolf populations. Furthermore, any off-reservation harvest of wolves by Tribal members in the ceded territories will be limited to a portion of the harvestable surplus at some future time. Such a harvestable surplus will be determined and monitored jointly by State and Tribal biologists, and will be conducted in coordination with the Service and the Bureau of Indian Affairs, as is being successfully done for the ceded territory harvest of inland and Great Lakes fish, deer, bear, moose, and furbearers in Minnesota, Wisconsin, and Michigan. Therefore, we conclude that any future Native American take of delisted wolves will not significantly affect the viability of the wolf population, either locally or across the Great Lakes area.

In the Western United States, Native American Tribes have played a key role in the recovery of gray wolves. We specifically acknowledge the profound contributions of the Nez Perce Tribe in the recovery of the gray wolf in the northern Rocky Mountains. The Nez Perce Tribe devoted substantial biological expertise and resources to support gray wolf reintroduction and monitoring that assisted in the recovery of this species. We also acknowledge other Tribes in the Western United States that have developed, and are implementing, wolf management plans, including the Eastern Shoshone and Northern Arapaho Tribes in Wyoming, the Blackfeet Tribe and the Confederated Salish and Kootenai Tribes in Montana, the Confederated Tribes of the Colville Reservation and the Spokane Tribe in Washington, and the Confederated Tribes of the Umatilla Indian Reservation in Oregon. We are not aware of any Tribal wolf management plans, beyond those already being implemented in the Western United States (see Management in the NRM section). However, Tribal biologists from the Confederated Tribes of Warm Springs are actively participating in radio-collaring and monitoring wolves on the Warm Springs Reservation in western Oregon.

The Service and the Department of the Interior recognize the unique status of the federally recognized Tribes, their right to self-governance, and their inherent sovereign powers over their members and territory. Therefore, the Department of the Interior, the Service, the Bureau of Indian Affairs, and other Federal agencies, as appropriate, will take the needed steps to ensure that Tribal authority and sovereignty within reservation boundaries are respected as the States implement their wolf-management plans and revise those plans in the future. Furthermore, there may be Tribal activities or interests associated with wolves encompassed within the Tribes' retained rights to hunt, fish, and gather in treaty-ceded territories. The Department of the Interior is available to assist in the exercise of any such rights. If biological assistance is needed, the Service will provide it via our field offices. Upon delisting, the Service will remain involved in the post-delisting monitoring of wolves in the Great Lakes area, but all Service management and protection authority under the Act will end.

Consistent with our responsibilities to Tribes and our goal to have the most comprehensive data available for our post-delisting monitoring, we will annually contact Tribes and their designated intertribal natural resource agencies during the 5-year post-delisting monitoring period to obtain any information they wish to share regarding wolf populations, the health of those populations, or changes in their management and protection. Reservations that may have significant wolf data to provide during the post-delisting period include Bois Forte, Bad River, Fond du Lac, Grand Portage, Keweenaw Bay Indian Community, Lac Courte Oreilles, Lac du Flambeau, Leech Lake, Menominee, Oneida, Red Lake, Stockbridge-Munsee Community, and White Earth. Throughout the 5-year post-delisting monitoring period, the Service will annually contact the natural resource agencies of each of these reservations and that of the 1854 Treaty Authority and Great Lakes Indian Fish and Wildlife Commission.

Management on Federal Lands

Great Lakes Area—The five national forests with resident wolves in Minnesota, Wisconsin, and Michigan (Superior, Chippewa, Chequamegon-Nicolet, Hiawatha, and Ottawa National Forests) have operated in conformance with standards and guidelines in their management plans that follow the Revised Recovery Plan's recommendations for the eastern timber wolf (USDA Forest Service (FS) 2004a, chapter 2, p. 31; USDA FS 2004b, chapter 2, p. 28; USDA FS 2004c, chapter 2, p. 19; USDA FS 2006a, chapter 2, p. 17; USDA FS 2006b, chapter 2, pp. 28–29). The Regional Forester for U.S. Forest Service Region 9 may maintain the classification of the wolf as a Sensitive Species, however, the Regional Foresters have the

authority to recommend classification or declassification of species as Sensitive Species. Under these standards and guidelines, a relatively high prey base would be maintained, and road densities would either be limited to current levels or decreased. For example, on the Chequamegon-Nicolet National Forest in Wisconsin, the standards and guidelines specifically include the protection of den sites and key rendezvous sites, and management of road densities in existing and potential wolf habitat (USDA 2004c, chap. 2, p. 19).

The trapping of depredating wolves may be allowed on national forest lands under the guidelines and conditions specified in the respective State wolf-management plans. However, there are relatively few livestock raised within the boundaries of national forests in the upper Midwest, so wolf depredation and lethal control of wolves is not likely to be a frequent occurrence, or to constitute a significant mortality factor, for the wolves in the Great Lakes area. Similarly, in keeping with the practice for other State-managed game species, any public hunting or trapping season for wolves that might be opened in the future by the States may include hunting and trapping within the national forests.

Wolves regularly use four units of the National Park System in the Great Lakes area and may occasionally use an additional three or four units. Although the National Park Service (NPS) has participated in the development of some of the State wolf-management plans in this area, NPS is not bound by States' plans. Instead, the NPS Organic Act and the NPS Management Policy on Wildlife generally require the agency to conserve natural and cultural resources and the wildlife present within the parks. NPS management policies require that native species be protected against harvest, removal, destruction, harassment, or harm through human action, although certain parks may allow some harvest in accordance with State management plans. Management emphasis in National Parks after delisting will continue to minimize the human impacts on wolf populations. Thus, because of their responsibility to preserve all native wildlife, units of the National Park System are often the most protective of wildlife. In the case of the wolf, the NPS Organic Act and NPS policies will continue to provide protection following Federal delisting.

Management and protection of wolves in Voyageurs National Park, along Minnesota's northern border, is not likely to change after delisting. The park's management policies require that ''native animals will be protected against harvest, removal, destruction, harassment, or harm through human action.'' No population targets for wolves will be established for the National Park (Holbeck in litt. 2005). To reduce human disturbance, temporary closures around wolf denning and rendezvous sites will be enacted whenever they are discovered in the park. Hunting is already prohibited on park lands, regardless of what may be allowed beyond park boundaries (West in litt. 2004). A radio-telemetry study conducted between 1987 and 1991 of wolves living in and adjacent to the park found that all mortality inside the park was due to natural causes (for example, killing by other wolves or starvation), whereas the majority (60–80 percent) of mortality outside the park was human-induced (for example, shooting and trapping) (Gogan et al. 2004, p. 22). If there is a need to control depredating wolves outside the park, staff will work with the State to conduct control activities where necessary (West in litt. 2004). However, such control is unlikely to be needed because presently there are no agricultural activities occurring adjacent to the park.

The wolf population of Isle Royale National Park, Michigan, is small, isolated, and lacks unique genetic diversity (Wayne et al. 1991). For these reasons, and due to constraints on expansion because of the island's small size, this wolf population does not contribute significantly towards meeting numerical recovery criteria. However, long-term research on this wolf population has added a great deal to our knowledge of the species. The wolf population on Isle Royale has typically varied from 18 to 27 wolves in 3 packs, but was down to just 2 wolves (a father-daughter pair) from the winter of 2015–2016 until 2018 (Peterson et al. 2018). In 2018, the NPS announced plans to move additional wolves to Isle Royale in an effort to restore a viable wolf population (83 FR 11787, March 16, 2018). Four wolves from Minnesota were released on the island in the fall of 2018, and 11 were relocated from Ontario in March 2019. One of the Minnesota wolves died later that fall; one of the Ontario wolves died in the winter; and one returned to the mainland during the winter. As of late May 2019, 14 wolves occurred on Isle Royale National Park: 12 successfully translocated from Minnesota and Canada plus the 2 wolves that remained on Isle Royale before the initiation of wolf reintroduction efforts (*https://https://www.nps.gov/isro/learn/news/presskit.htm*).

Two other units of the National Park System, Pictured Rocks National Lakeshore and St. Croix National Scenic Riverway, are regularly used by wolves. Pictured Rocks National Lakeshore is a narrow strip of land along Michigan's Lake Superior shoreline. Lone wolves periodically use, but do not appear to be year-round residents of, the Lakeshore. If denning occurs after delisting, the Lakeshore will protect denning and rendezvous sites at least as strictly as the Michigan Plan recommends (Gustin in litt. 2003). Harvesting wolves on the Lakeshore may be allowed (if the Michigan DNR allows for harvest in the State), but trapping is not allowed. The St. Croix National Scenic Riverway, in Wisconsin and Minnesota, is also a mostly linear ownership. The Riverway is likely to limit public access to denning and rendezvous sites and to follow other management and protective practices outlined in the respective State wolf-management plans, although trapping is not allowed on NPS lands except possibly by Native Americans (Maercklein in litt. 2003).

At least one pack of 4–5 wolves used the shoreline areas of the Apostle Islands National Lakeshore, with a major deer yard area (a place where deer congregate in the winter) occurring on portions of the Park Service land. Wolf tracks have been detected on Sand Island, and a wolf was photographed by a trail camera on the island in September 2009. A gray wolf was also detected on Stockton Island (Allen et al. 2018, p. 277). It is not known if wolves periodically swim to these and other islands, or if they travel to islands only on ice in winter.

Wolves occurring on National Wildlife Refuges in the Great Lakes area will be monitored for a minimum of 5 years after delisting (USFWS 2008, p. 9). Trapping or hunting by government trappers for depredation control will not be authorized on National Wildlife Refuges. Because of the relatively small size of these Refuges, however, most or all wolf packs or individual wolves in these Refuges also spend significant amounts of time off these Refuges.

Wolves also occupy the Fort McCoy military installation in Wisconsin. Management and protection of wolves on the installation will not change significantly after Federal or State delisting. Den and rendezvous sites will continue to be protected, hunting seasons for other species (coyote) will be closed during the gun deer season, and current surveys will continue, if resources are available. Fort McCoy has no plans to allow a public harvest of wolves on the installation (Nobles in

litt. 2004; Wydeven et al. 2005, p. 25; 2006a, p. 25).

Minnesota National Guard's Camp Ripley contains parts of 2 pack territories, which typically include 10 to 20 wolves. Minnesota National Guard wildlife managers try to have at least one wolf in each pack radio-collared and to fit an additional one or two wolves in each pack with satellite transmitters that record long-distance movements. There have been no significant conflicts with military training or with the permit-only public deer-hunting program at the camp, and no new conflicts are expected following delisting. Long-term and intensive monitoring has detected only two wolf mortalities within the camp boundaries—both were of natural causes (Dirks 2009, pers. comm.).

The protection afforded to resident and transient wolves, their den and rendezvous sites, and their prey by five national forests, four National Parks, two military facilities, and numerous National Wildlife Refuges in Minnesota, Wisconsin, and Michigan will further ensure the conservation of wolves in the three States after delisting. In addition, wolves that disperse to other units of the National Wildlife Refuge System or the National Park System within the Great Lakes area will also receive the protection afforded by these Federal agencies.

West Coast States—The West Coast States generally contain a greater proportion of public land than the Great Lakes area. Public lands here include many National Parks, National Forests, National Monuments, National Wildlife Refuges, and lands managed by the Bureau of Land Management. These areas are largely unavailable and/or unsuitable for intensive development and contain abundant ungulate populations. Public lands in the West contain relatively expansive blocks of potentially suitable habitat for wolves. On some of these public lands the presence of livestock grazing allotments increases the likelihood of wolf-livestock conflict, which increases the chances of wolf mortality from lethal removal of chronically depredating wolf packs. In areas occupied by wolves in the northern Rocky Mountains, the overall wolf population has been remarkably resilient—in terms of population numbers and distribution—despite lethal control of depredating wolves.

In the listed portions of California, Oregon, and Washington, wolves are resident on portions of the Lassen, Plumas, Fremont-Winema, Rogue-Siskiyou, Mount Hood, Okanogan-Wenatchee, and Mt. Baker-Snoqualmie National Forests (Forests) and portions of Bureau of Land Management Districts in those States. Forest Service Land and Resource Management Plans (LRMPs) and Bureau of Land Management Resource Management Plans (RMPs) for these areas pre-date the reestablishment of wolf packs and, therefore, do not contain standards and guidelines specific to wolf management. The LRMPs and RMPs do, however, recognize that these agencies have obligations under sections 7(a)(1) and 7(a)(2) of the Act to proactively conserve and avoid adverse effects to federally listed species. When federally delisted, the Regional Foresters for U.S. Forest Service Region 6 will include the gray wolf as a Sensitive Species in their region (BLM 2019, p. 4). U.S. Forest Service Region 5 may do the same. As a Sensitive Species, conservation objectives for the gray wolf and its habitat would continue to be addressed during planning and implementation of projects. BLM requires the designation of federally delisted species as sensitive species for 5 years following delisting (BLM 2008, p. 36). BLM sensitive species are managed consistent with species and habitat management objectives in land use and implementation plans to promote their conservation and minimize the likelihood and need for listing under the Act (BLM 2008, p. 8).

Gray wolves disperse through, but are not necessarily residents of, National Monuments, and National Wildlife Refuges in the listed portions of all three West Coast States. Wolves are also known to disperse through National Parks, and one territory in Washington overlaps a small portion of the North Cascades National Park. Similar to these types of lands in the Great Lakes areas, management plans provide for the conservation of natural and cultural resources and wildlife. The gray wolf and its habitat are expected to persist on these lands once federally delisted.

Central Rocky Mountains—Similar to other western States, a large proportion of Colorado and Utah is composed of publicly owned Federal lands (approximately 36 percent in Colorado and approximately 63 percent in Utah) (Congressional Research Service 2020). Public lands include National Forests, National Parks, National Monuments, and National Wildlife Refuges, which comprise approximately 63 percent of the public lands in Colorado and 30 percent in Utah. In addition, the Bureau of Land Management manages approximately 35 percent of public land in Colorado, much of which is located in the western portion of the State, and approximately 67 percent of Utah public lands. Although much of this public land is largely unavailable and/or unsuitable for intensive development and contains an abundance of ungulates, livestock grazing does occur on some public lands in both Colorado and Utah, which may increase the potential for wolf mortality from lethal control of chronically depredating packs. However, in both Minnesota and the northern Rocky Mountains, lethal control of depredating wolves has had little effect on wolf distribution and abundance (see Human-Caused Mortality section above).

At present, the group of at least six wolves that were confirmed in January 2020 in northwest Colorado have been documented primarily on lands owned by the Bureau of Land Management and the U.S. Fish and Wildlife Service, but likely use some State and private land in the area as well. Although very close to the Utah border, this group of wolves has not been confirmed in Utah. The lone disperser that continues to reside in the North Park area of north-central Colorado has been documented on the Medicine-Bow/Routt National Forest and likely uses adjacent State and private lands.

Summary of Post-Delisting Management

In summary, upon delisting, there will be varying State and Tribal classifications and protections provided to wolves. The State wolf-management plans currently in place for Minnesota, Wisconsin, and Michigan will maintain viable wolf populations in each State. Each of those plans contains management goals that will maintain healthy populations of wolves in the State by establishing a minimum population threshold of 1,600 in Minnesota, 250 in Wisconsin, and 200 in Michigan, and each State intends to manage for numbers above these levels. Furthermore, both the Wisconsin and Michigan Wolf Management Plans are designed to manage and ensure the existence of wolf populations in the States as if they are isolated populations and are not dependent upon immigration of wolves from an adjacent State or Canada, while still maintaining connections to those other populations. This approach provides strong assurances that wolves in Wisconsin and Michigan will remain a viable component of the wolf population in the Great Lakes area and the lower 48 United States. Each of the three Great Lakes States has a longstanding history of leadership in wolf conservation. All of the State management plans provide a high level of assurance of the persistence of healthy wolf populations

and demonstrate the States' commitment to wolf conservation.

Furthermore, when federally delisted, wolves in Minnesota, Wisconsin, and Michigan will continue to receive protection from human-caused mortality by State laws and regulations. Wolves are protected as game species in each of those States, and lethal take is prohibited without a permit, license, or authorization, except under a few limited situations (as described under the management plans above). Each of the three States will consider population-management measures, including public hunting and trapping, after Federal delisting. However, regardless of the methods used to manage wolves, each State has committed to maintaining wolf populations at levels that ensure healthy wolf populations will remain.

Similarly, State management plans developed for Washington, Oregon, and California contain objectives to conserve and recover gray wolves. To maintain healthy populations, each State will monitor population abundance and trends, habitat and prey availability, and impacts of disease and take actions as needed to maintain populations. They are also committed to continuing necessary biological and social research, as well as outreach and education, to maintain healthy wolf populations. Wolves in Washington, Oregon, and California will also be protected by State laws and regulations when federally delisted. Currently, wolves in Washington and California are protected under State statutes as endangered species, and under their respective State management plans. Wolves in Oregon are State-delisted but still receive protection under its State management plan. Each plan contains various phases outlining objectives for conservation and recovery. As recolonization of the West Coast States continues, different phases of management will be enacted. All phases within the various State management plans are designed to achieve and maintain healthy wolf populations.

In the central Rocky Mountains, wolves will remain listed as an endangered species at the State level in Colorado and will continue to receive protection under the Colorado Revised Statutes. In Utah, the State management plan will guide management of wolves until 2030; until at least two breeding pairs are documented in the State for two consecutive years; or until the political, social, biological, or legal assumptions of the plan change, whichever occurs first.

Finally, based on our review of the completed Tribal management plans and communications with Tribes and Tribal organizations, we anticipate that federally delisted wolves will be adequately protected on Tribal lands. Furthermore, the minimum population levels defined in the Minnesota, Wisconsin, and Michigan State management plans can be maintained (based on the population and range of off-reservation wolves) even without Tribal protection of wolves on reservation lands. In addition, on the basis of information received from other Federal land-management agencies, we expect that National Forests, National Parks, military bases, and National Wildlife Refuges will provide protections to wolves in the areas they manage that will match, and in some cases exceed, the protections provided by State wolf-management plans and State regulations.

Summary of Changes From the Proposed Rule

Based on our review of all public and peer reviewer comments we received on our March 15, 2019, proposed rule (84 FR 9648, March 15, 2019), and new information they provided or that otherwise became available since the publication of the proposed rule, we reevaluated the information in the proposed rule and made changes as appropriate. As indicated in this rule (see Determination of Species Status), our analyses are based on the best scientific and commercial data available. Thus, we include in this final rule new information received in response to the March 19, 2019, proposed rule that meets this standard.

We received many comments related to our approach to the proposed rule. While commenters presented a broad range of positions regarding our approach, many of them focused on several common issues. Some commenters questioned our decision to combine the two listed gray wolf entities for analysis rather than analyze each of the listed entities separately. Others pointed out that we did not include the analyses to support our conclusion that, even if we had analyzed the listed entities separately, neither would meet the Act's definitions of a threatened species or an endangered species (84 FR 9686, March 15, 2019). Still others expressed disagreement with our treatment of gray wolves in the West Coast States, opining that we could not adequately consider the status of gray wolves in the West Coast States without also assessing threats to the recovered and delisted gray wolf population in the NRM DPS. Finally, a few commenters reasoned that the Act allows us to analyze the status of only valid listable entities, and, because we acknowledge the two gray wolf listed entities do not qualify as valid species, subspecies, or DPSs under the Act, the entities should be delisted on that basis alone.

In light of the peer review and numerous comments received during the public comment period, we have reexamined the approach we took in the proposed rule. Our proposal clearly articulated the reasoning behind combining the listed entities for analysis and, as this final rule illustrates, we continue to find it a reasonable approach. However, we agree with commenters who suggested that we should include a separate determination for each of the currently listed gray wolf entities. Thus, we added the analysis to this final rule to support our statement in the proposed rule that, when analyzed separately, the entities do not meet the definition of a threatened or an endangered species.

We have also reconsidered our approach to the NRM wolves in light of public comments. The biological report we prepared to support our proposal included detailed information related to gray wolf abundance and distribution throughout the lower 48 United States, including the NRM DPS. However, we did not include the delisted NRM DPS in the threats analysis of our proposed rule because wolves in that DPS are not currently listed under the Act. Nonetheless, because we considered wolves in the West Coast States to be an extension of the population of wolves in the delisted NRM DPS, we included information about the NRM DPS in our proposal to provide context for our discussion of wolves comprising the combined listed entity.

Commenters remarked that this approach was inconsistent, and one commenter opined that we could not delist wolves in the West Coast States without also including the NRM DPS in our analysis. In this final rule, we include NRM wolves in the analysis because we conclude that it makes sense, biologically, to consider those wolves because of their connection to the west coast wolves that are part of the listed 44-State entity. As we concluded in our proposed rule, west coast wolves are not discrete from the NRM DPS (84 FR 9654, March 15, 2019; see also The Currently Listed *C. lupus* Entities Do Not Meet the Statutory Definition of a ''Species''). Because most west coast wolves are dispersers from the NRM, or are descended from dispersers, wolves in the NRM are relevant to our analysis of whether the west coast wolves are ''significant'' to the entities that we evaluate in this rule. Thus, in this final rule we include an evaluation of the

status of the two currently listed gray wolf entities combined with the recovered NRM DPS. However, although we consider the NRM wolves due to their connection to currently listed wolves, we reiterate that wolves in the NRM DPS are recovered, and we are not reconsidering or reexamining our 2009 and 2012 delisting rules (74 FR 15123, April 2, 2009; 77 FR 55530, September 10, 2012).

Finally, while our proposed rule already articulated that neither of the two gray wolf listed entities constitute valid listable entities under the Act and should, therefore, be removed from the List (84 FR 9686, March 15, 2019), we added a more complete discussion in this final rule to support our conclusion (see The Currently Listed *C. lupus* Entities Do Not Meet the Statutory Definition of a ''Species''). We also clarify that, while the currently listed entities could be removed from the List on that basis, we elected not to act solely on that basis in this final rule. Instead, we elected to consider whether the gray wolves within the currently listed entities meet the definition of a threatened or an endangered species, in this case whether they are recovered.

In addition to the items discussed above, we made the following changes in this final rule:

(1) We updated distribution information for the gray wolf;

(2) we added a *Definition and Treatment of Range* section to Approach for this Rule (see Our Response to Comments 5, 7, 8, 10, 63);

(3) we added a *Genetic Diversity and Inbreeding* section to Summary of Factors Affecting the Species (see Our Response to Comments 2, 41, 57, 116, 117);

(4) we incorporated information regarding gray wolves in the central Rocky Mountains into the Summary of Factors Affecting the Species section as well as incorporated a consideration of these wolves into our Determination of Species Status section;

(5) we incorporated new information as appropriate; and

(6) we made efforts to improve clarity and correct typographical or other minor errors.

Summary of Comments and Recommendations

In the proposed rule published on March 15, 2019 (84 FR 9648), we requested that all interested parties submit written comments on the proposal by May 14, 2019. We also contacted appropriate Federal and State agencies, Tribes, scientific experts and organizations, and other interested parties and invited them to comment on the proposal. A newspaper notice inviting general public comment was published in *USA TODAY* on March 22, 2019. Subsequently, on May 14, 2019, we extended the public comment period until July 15, 2019 (84 FR 21312). We received several requests for public hearings. A public information open house and public hearing was held in Brainerd, Minnesota, on June 25, 2019 (84 FR 26393).

In addition, in accordance with our joint policy on peer review published in the **Federal Register** on July 1, 1994 (59 FR 34270), and updated guidance issued on August 22, 2016 (USFWS 2016, entire), we solicited expert opinion from five knowledgeable individuals with scientific expertise that included experience with large carnivore management, especially wolves, expert knowledge of conservation biology, wildlife management, demographic management of mammals, genetics, population modeling, mammalian taxonomy, or systematics. We received responses from all five peer reviewers. The peer review process, including the selection of peer reviewers, was conducted and managed by an independent third party (USFWS 2018, entire; Atkins 2019, pp. 1–6).

We reviewed all comments received from the peer reviewers and the public for substantive issues and new information regarding the delisting of the gray wolf, inclusive of comments on the proposed rule and the supporting biological report. Multiple respondents provided technical edits and editorial comments and corrections on the proposed rule and biological report, or recommended additional citations to consider. We made recommended edits and corrections to the rule and biological report, where appropriate. We also reviewed and considered all additional citations provided by peer reviewers and others, and incorporated information from them, as appropriate, into this final rule and the biological report.

Peer Reviewer Comments

Overall, three of the reviewers found the biological report represented an accurate overview of the changes in the biological status (range, distribution, abundance) of the gray wolf in the lower 48 United States over the last several decades, and provided recommended revisions and updates. Although one of those reviewers found our taxonomic treatment of wolves to be somewhat arbitrary, a fourth reviewer found the taxonomy section adequate and recommended additional information on biology, ecology, and biological status of the gray wolf for inclusion in the report. A fifth reviewer found the biological report inadequate because the reviewer believed that there were other sources of information that should be included, which the reviewer provided and we considered.

With respect to our proposed rule, 2 peer reviewers found our analysis of the factors relating to the persistence of gray wolves in the lower 48 United States to be adequate; 1 peer review provided corrections and updates. Three reviewers found our analysis of these factors inadequate, mainly because they found our treatment of genetic threats, human-caused mortality, or habitat suitability insufficient, or because they disagreed with Service policy.

Three reviewers found it reasonable to conclude that the approach of Michigan, Wisconsin, and Minnesota to wolf management is likely to maintain a viable wolf population in the Great Lakes area into the future, while two did not. One of these two found that the proposed rule did not provide adequate support for either the conclusion that the metapopulation in the Great Lakes area contained sufficient resiliency, redundancy, and representation to sustain populations within the combined listed entity into the future or that wolves outside this metapopulation are not necessary to maintain its recovered status. All provided additional information and literature for inclusion in the rule, which we reviewed. Comments received are addressed in the following summary, and our responses are incorporated into this final rule as appropriate.

Finally, although we did not request peer review on matters related to policy application, we received a number of policy-related comments from four of the five reviewers. Issues raised included: How we applied certain terms defined in Service policies (*e.g.,* species ''range''); our application of the SPR policy; and our approach to the rule. Although these comments are outside of the scope of the requested scientific peer review (USFWS 2018, entire; Atkins 2019, pp. 1–6), we address them in the summary below.

Biology, Ecology, Range, Distribution, or Population Trends

Comment 1: Several reviewers stated that the biological report and proposed rule oversimplified the genetic structure of gray wolves and requested additional information about population or metapopulation structure in wolves.

Our Response: We modified both the biological report and the rule to better reflect the various factors that have been shown to impact the population genetic structure of wolves in North America,

including consideration and addition of citations recommended by the reviewer.

Comment 2: Several reviewers noted that there should be a more detailed discussion of potential genetic impacts of delisting and provided additional citations for our consideration. These comments included requests for further consideration of the impacts of delisting on connectivity between populations, particularly in western States.

Our Response: We revised the biological report to provide greater detail on existing genetic structure in wolves as a background for potential genetic issues that may result from the rule. In addition, we added a section to this rule (*Genetic Diversity and Inbreeding*) that provides a more in-depth analysis of the potential genetic impacts of delisting, including consideration of inbreeding and effects to metapopulation structure and connectivity.

Comment 3: Peer reviewers raised concerns about our description of the historical range of gray wolves, pointing out that the scientific evidence indicates that either eastern or red wolves were present in the Northeastern United States historically, not the gray wolf.

Our Response: As we discuss in the rule and the biological report, the taxonomy of wolves, particularly in the Eastern United States, is not settled. Along with the morphological data presented by authors such as Nowak (1995, entire; 2002, entire; 2003, entire; 2009, entire), there is now significant genetic and genomic research that has contributed to the ongoing debate over the correct taxonomic relationship between eastern wolves, red wolves, and western gray wolves. This debate includes considerable uncertainty about the potential historical ranges of those groups, including questions about the degree to which they did or did not overlap, which can be difficult to ascertain based on limited available samples. In presenting information on historical range, we sought to acknowledge this uncertainty while considering the taxa that were covered by the original listing rule we are addressing. As a result, we explicitly include eastern wolves, but not red wolves, in the gray wolf entities evaluated for this rule, meaning that the historical range of the gray wolf in the lower 48 United States does not attempt to distinguish between the ranges of western gray wolf and eastern wolf and instead considers them as a single range. The area of ''uncertainty'' in our map of the historical range in the biological report, therefore, reflects the fact that there is evidence that the Northeastern United States may have been inhabited by wolves included in our analysis. We revised the text of the biological report to clarify the information pertaining to historical range and to address the reviewers' concerns.

Comment 4: One peer reviewer sought clarification of information presented in the figures depicting historical range and current distribution of the gray wolf (*Canis lupus*) in the lower 48 United States (figure 2 of the proposed rule and figure 1 of the biological report). Specifically, the reviewer asked us to explain the basis for the current distribution and provide citations for data used to develop the current distribution so that he could determine whether we included data for all wolves or some subset of wolves, how the polygons were delineated, and if there is a time period associated with the data used.

Our Response: The current distribution (*i.e.,* range) shown in figure 2 of the proposed rule and figure 1 of the biological report includes State data for packs and groups of wolves. The distribution is current as of winter 2019–2020. We revised these figures and associated text to address the concerns raised by the peer reviewer. Also see Our Response to Comment 6.

Comment 5: One peer reviewer requested additional detail regarding figure 1 in the biological report (same as figure 2 in proposed rule). Specifically, the reviewer questioned whether current distribution is also current range and noted that the figure does not provide a spatial reference describing the area included in the threats analysis, nor is it described in associated paragraphs.

Our Response: The figure depicts the current distribution of known wolves in the lower 48 United States. The figure was not meant to indicate a specific spatial extent for our threats analysis, rather it was to provide a representation of the approximate locations of wolves within the listed wolf entities relative to wolves in the remainder of the lower 48 United States. The threats analyses have been completed for the two listed entities assessed separately, in combination (combined listed entity), and in combination with the NRM DPS (lower 48 United States entity), all of which are encompassed by the current distribution indicated in figure 1 of the biological report. We endeavored to match our threats analysis to the spatial scale of the gray wolf's distribution. However, some data on threats and conservation measures and management of wolves were provided at regional or State-wide scales, and we did not want to constrain our analysis to the dynamic smaller polygons in the West Coast States and Central Rockies where wolves continue to recolonize. Therefore, our threats analysis encompasses relevant threats to wolves, as well as conservation and management, in the following geographic areas: West Coast States (western Washington, western Oregon, and California), Northern Rocky Mountains (represented in the figure), Central Rocky Mountains (Colorado and Utah [outside of the NRM DPS]), and the Great Lakes Area (Minnesota, Wisconsin, and Michigan). See Our Response to Comment 37 and *Definition and Treatment of Range* in this final rule.

Comment 6: One peer reviewer recommended that including marks on States in which dispersing gray wolves have appeared in figure 1 in the biological report (figure 2 in the proposed rule) may further demonstrate the level of recovery gray wolves have attained.

Our Response: As indicated in our response to Comment 5, the purpose of this figure is to show the current distribution of gray wolves to provide information about where wolves are currently known to occur (see *Definition and Treatment of Range*). We acknowledge that dispersing wolves have been documented outside of the known, current distribution and present this information in the text of this final rule and the biological report.

Comment 7: One peer reviewer assumed our analysis of threats for wolves in the Great Lakes area was in the area of current distribution and indicated that this made sense, as it is a single large area supporting thousands of wolves. Similarly, the peer reviewer questioned whether our threats analysis for wolves in Washington, Oregon, and California included only the small, isolated patches of occupied wolf habitat or also included the intervening areas.

Our Response: The peer reviewer is correct regarding the scope of the threats analysis for the Great Lakes area wolves. In areas where the saturation of wolves is denser, polygons delineated around occupied habitats are larger and also incorporate corridors connecting occupied habitats to one another. The opposite is true in the West, where wolves are less saturated due to more recent recolonization from resident packs, the NRM, and Canada. Connecting these smaller occupied patches to the larger metapopulation would be speculative at best given the level of information currently available about corridors that may connect occupied habitats. We describe the current condition of wolves in

Washington, Oregon, California, and Colorado (not limited to small polygons) and how these wolves would be managed post-delisting (also see Our Responses to Comments 8 and 37 and *Definition and Treatment of Range* in this final rule).

Comment 8: One peer reviewer noted that the apparent current range of the gray wolf in the lower 48 United States, under a metapopulation structure, should include portions of the historical range because the historical range provides connectivity between known occurrences. Additionally, the peer reviewer advised that sink areas of metapopulations (*e.g.,* dispersal end points in various western and midwestern States) should be considered current range as they provide viability and connectivity to metapopulations (citing Howe et al. 1991 and Heinrichs et al. 2015).

Our Response: As described in the *Definition and Treatment of Range* section of this final rule, we define current range to be the area occupied by the species at the time we make a status determination. The current range of the gray wolf in the lower 48 United States is based on data provided by the States on the locations of groups or packs of wolves. Individual dispersing wolves do not have a defined territory or consistently use any one area and, therefore, are not included in the current range of the gray wolf. Also see Our Response to Comment 37 and *Definition and Treatment of Range* in this final rule.

Comment 9: One peer reviewer questioned why we include listed and delisted wolves in figure 2 of the biological report, when we state that we are not including the delisted NRM DPS wolves as part of the listed entity under analysis.

Our Response: As explained above, we are including wolves in the delisted NRM DPS in our analysis of the status of the lower 48 United States entity for this final rule. We provided information from the NRM DPS in our biological report and the proposed rule because the NRM wolves are biologically connected to wolves in the West Coast States, and to illustrate how wolf populations have responded post-delisting when they are managed under State authority. We also included NRM wolves in figure 2 of the biological report, which provides information on changes in distribution and abundance since the original listing in 1978 (see USFWS 2020, p. 14).

Comment 10: One peer reviewer sought clarification on whether our description of the public lands available for expansion of west coast wolves includes areas outside of the current range or current distribution.

Our Response: We have clarified, in this final rule, that our findings are based on the current range of the gray wolf and do not rely on further range expansion of west coast wolves. Also see *Definition and Treatment of Range* in this final rule.

Comment 11: One peer reviewer requested inclusion of 2018 minimum wolf counts for Washington, Oregon, and California, as well as for the Mexican gray wolf. Similarly, another peer reviewer noted an inconsistency in our discussion of whether the Mexican gray wolf population was growing or stable.

Our Response: The requested data were not available at the time the biological report and proposed rule were completed. The 2018 data, as well as data from winter 2019–2020, are now included in this final rule and revised biological report. We also clarified that the Mexican gray wolf population continues to grow.

Comment 12: One peer reviewer noted that Appendix 1 of the biological report contained minimum annual counts of wolves only for Michigan, Minnesota, and Wisconsin. Similar information was requested for Washington, Oregon, and California.

Our Response: We have added another table, Appendix 2, to the biological report that provides minimum end of year counts for wolves in Idaho, Montana, Wyoming, Washington, Oregon, and California.

Comment 13: One reviewer recommended that we clarify in the biological report differences between minimum wolf counts versus patch occupancy modeling when discussing wolf population estimates in Montana and proposed specific language.

Our Response: The paragraph in question has been revised and updated using similar concepts, rather than the exact terminology provided by the reviewer. Updated information is also included in the *Human-caused Mortality* section of this final rule.

Human-Caused Mortality

Comment 14: One peer reviewer expressed their view that illegal take is underestimated by State monitoring programs and would be much higher than it is today if wolves were to be delisted. This reviewer expressed concerns about a ''catastrophic decline'' in the Minnesota wolf population post-delisting as well as ''unwarranted assurances about the safety of wolves in the Western Great Lakes'' post-delisting in both the proposed rule and biological report. One peer reviewer recommended that we add State-by-State estimates of mortality rates and include additional mortality factors to table 4 in the rule (to include all forms of mortality aside from lethal control and legal public harvest). The reviewer created a new table and provided new information about the percent of the population removed annually through agency control efforts. Other commenters also expressed concern that State monitoring programs underestimate mortality rates, including the effects of legal depredation control and other sources of mortality.

Our Response: In most instances, State and Tribal wildlife agencies have been the primary agencies responsible for monitoring wolf populations while they were federally listed. As a result, the Service has relied upon data provided by partner wildlife agencies to evaluate population metrics related to recovery. We do not expect that wolf monitoring will significantly change or become less precise post-delisting. To evaluate the population status of wolves, biologists used a variety of monitoring techniques to evaluate pack size and reproductive success, identify pack territories, monitor movements and dispersal events, and identify new areas of possible wolf activity. In addition to direct counts that provide a minimum known number each year, managers attempt to use similar survey techniques annually so that accurate assessments of historical trends may be used to further evaluate wolf population status and changes over time. However, traditional techniques used to monitor wolves (*e.g.,* capture and radio-collar animals, monitor from the ground or air) can be dangerous to the animal and wildlife personnel, are costly and time-consuming, and become less precise as wolf abundance and distribution increase; thus, these techniques underestimate the true population size (Gude *et al.* 2012, p. 116).

As a result, State management agencies have been at the forefront in developing more accurate, cost-efficient monitoring techniques to assess wolf population status in their respective States. For example, Montana incorporates hunter surveys, along with other variables, into a patch occupancy modeling framework to estimate wolf abundance and distribution across the State. Idaho experimented with multiple noninvasive monitoring techniques to assess reproductive success and the number of packs in the State and most recently used camera surveys and a modeling framework to provide a population estimate for 2019. Michigan inventories wolves using a geographically based, stratified, random sample that produces an unbiased,

regional estimate of wolf abundance. Minnesota radio-collars a relative few individuals in a number of packs Statewide and uses metrics obtained from those packs to evaluate occupied range and abundance. In addition to using similar techniques as Minnesota, Wisconsin also uses citizen science volunteers who are trained and qualified through a tracking program to assist agency personnel in documenting wolf presence and number across survey blocks in winter. California, Oregon, Washington, and Wyoming continue to use traditional monitoring approaches that provide minimum counts.

Most State management agencies within occupied wolf range in the lower 48 United States publish a report that summarizes the results of wolf monitoring and management activities each year they are conducted. The Service reviewed these reports to complete the biological report and the proposed and final rules. These reports also provide information about the number and type of known causes of mortality that occurred in each State. Wolves may go missing for a variety of reasons, and removing these animals from survival analyses has the potential to bias survival estimates high (Liberg *et al.* 2012, p. 914; Stenglein *et al.* 2015c, p. 374; O'Neil 2017, p. 202; Treves *et al.* 2017b, pp. 7–8). However, it is not reasonable to assume that all, or even most, wolves with unknown fates have died, particularly through illegal means. For example, a wolf captured in northeast Oregon in 2011 went missing later that same year until it was rediscovered again in 2015 in southwestern Oregon (ODFW 2016, p. 8), where it became the breeder in a newly formed pack (ODFW 2017, p. 5). An integrated population model for Wisconsin's wolf population indicated that up to an additional 4 percent of missing wolves may have actually died between 2003 and 2011 (Stenglein *et al.* 2015c, pp. 372–374).

Managers use empirical data from monitoring efforts and reports from the public to provide accurate information about the number and causes of known wolf mortalities, but are cautious about drawing conclusions from those data regarding the fates of missing animals. Most managers acknowledge that information related to the number and cause of wolf mortalities are likely biased because not every wolf is fitted with a radio collar and not every wolf that dies is recovered so their fates are unknown. In the NRM, it was estimated that 10 percent of the population was illegally killed annually. Although some research has indicated that rates of illegal take may be biased low (Liberg et al. 2012, p. 914; Treves et al. 2017b, pp. 7–8), other studies have supported the estimate that between 6 and 10 percent of the known population may be illegally killed each year in both the NRM and the Great Lakes area wolf populations (Smith *et al.* 2010, p. 625; Ausband *et al.* 2017a, p. 7; O'Neil 2017, p. 214, Stenglein *et al.* 2018, p. 104). Wolves die for a variety of reasons and the mechanisms they have to compensate for these mortalities have made wolf populations very adaptable and resilient to perturbations. Table 4 in the rule provides information about the average annual number and percent of the total estimated population removed in 5-year increments (with the exception of the period between 2015 and 2017) via agency-directed lethal control of depredating wolves in Minnesota. This table relates only to depredation control in Minnesota; other forms of mortality are addressed elsewhere in the rule. While the Service appreciates the reviewer's efforts to create a new table, we find the table that was originally published in the proposed rule is an appropriate way to provide information about the average number and percentage of the population removed through lethal control actions in Minnesota.

Refer to the *Human-caused Mortality* section of the rule and Our Response to Comment 16 for further information related to discussions about illegal take.

Comment 15: One reviewer noted that we did not analyze human-caused mortality for western wolves—specifically, how human-caused mortality in the core of the western United States metapopulation could affect the viability of outlying western listed wolves. The same reviewer also noted a lack of discussion regarding the potential for high levels of human-caused mortality in one western listed area to affect the viability of other western listed areas.

Our Response: Aside from large protected areas such as Yellowstone and Isle Royale National Parks, human-caused mortality has been, and continues to be, the primary source of known wolf mortality in the lower 48 United States, including wolves in the West Coast States. Wolves in the core of the western United States metapopulation (*e.g.,* NRM DPS) are managed under State authority and following an initial population decline post-delisting, wolf populations appear to have stabilized in Idaho and Montana, whereas they continue to increase in Oregon and Washington (see table 3). Wolf populations in Wyoming were delisted in 2017 and may be following a similar pattern to that observed in Idaho and Montana (see table 3).

While it is possible that increased levels of human-caused mortality due to public harvest could affect peripheral populations of wolves by creating isolated pockets that may result in reduced genetic diversity and increased potential for inbreeding in outlying areas, there is no empirical evidence to indicate that this has occurred or is likely to occur in the future. Genetic diversity was limited for wolves on Isle Royale National Park, but the cause was their location on an isolated island rather than the effects of human-caused mortality. Dispersal is innate to the biology of the wolf and moderate increases in human-caused mortality in core areas may reduce the overall number of dispersers due to slight reductions in the total number of wolves on the landscape. Increased human-caused mortality also has the potential to create additional vacant habitats and social openings within packs, which may result in an overall reduction in dispersal distance for wolves in the core of the western United States metapopulation. Nonetheless, short- and long-distance dispersal events, as well as effective dispersal in which the disperser became a breeder, continue to be documented in hunted populations, as well as high- and low-density wolf populations, which contributes to the maintenance of high levels of genetic diversity. Furthermore, resident packs in California, Oregon, and Washington contribute annually to the number of dispersing wolves that are available to fill social openings or to recolonize vacant suitable habitat both within and outside of each State. This supports the continued viability of wolves and enhances the resiliency, redundancy, and representation of wolves in the gray wolf entities evaluated in this rule. For further information, refer to the *Human-caused Mortality* and *Genetic Diversity and Inbreeding* sections of this final rule.

Comment 16: One reviewer and one commenter stated that the biological report and the proposed rule did not review the scientific debate concerning the effects of current levels of illegal take and the potential increase in legal take (*i.e.,* ''tolerance hunting'') on wolf populations.

Our Response: We reviewed the citations provided by the reviewer and have updated the rule accordingly. We acknowledge in the *Human-caused Mortality* section of the rule that human-caused mortality is likely to increase post-delisting as some States (primarily the Great Lakes States) begin to manage wolves under the guidance of their

respective State management plans. This may include increased use of lethal control to mitigate depredations on livestock and the implementation of public harvest to stabilize or reduce wolf population growth rates. Post-delisting, gray wolves in Washington and California will continue to be classified as endangered at the State level until they are State-downlisted or State-delisted based on population performance and recovery metrics specific to each State. Wolves in Oregon were State-delisted in 2016; however, they continue to receive protection under a State statute and the Oregon Wolf Conservation and Management Plan, which mandates a public rulemaking process prior to authorizing legal hunting of wolves. In Colorado, wolves will continue to be classified as endangered at the State level after delisting, and management will be guided by the wolf management recommendations developed by the Colorado Wolf Management Working Group. Based on past delisting efforts in the Great Lakes area, and as demonstrated by current State management of wolves in Idaho, Montana, and Wyoming, we conclude it is unlikely that moderate increases in human-caused mortality will cause dramatic declines in wolf populations across the lower 48 United States.

We do not agree that increased take through lethal depredation control and legal harvest will cause a corresponding increase in illegal take. Although some have indicated that estimates of illegal take are underestimated (Liberg et al. 2012, p. 914; Treves et al. 2017b, pp. 7–8), multiple, independent studies from different areas of the lower 48 United States indicate that illegal take removes approximately 10 percent of populations annually (Smith et al. 2010, p. 625; Ausband et al. 2017a, p. 7; O'Neil 2017, p. 214, Stenglein et al. 2018, p. 104). There are also indications that documented illegal take of wolves was higher during periods of Federal management compared to State management (Olson et al. 2014, entire). Based on empirical information compiled by wildlife management agencies, illegal mortality did not increase following previous delisting efforts in the Great Lakes area or the NRM States. See the *Human-caused Mortality* section of the rule for further information related to illegal take and wolf survival as well as the Post-delisting Management section of the rule for information related to how States intend to adaptively manage wolf populations to ensure the continued existence of a recovered, viable population.

Comment 17: One peer reviewer objected to the use of lethal control by States to mitigate wolf conflicts with livestock and humans post-delisting. The peer reviewer also asserted that the proposed rule made assumptions that lethal control was self-limiting and inferred that agency control only leads to more wolf killing.

Our Response: We recognize and respect that some people may find some or all forms of human-caused wolf mortality morally or ethically objectionable, particularly the use of lethal removal of wolves to mitigate conflicts with livestock. However, the Act requires that we make our determination based on whether the entity under analysis meets the Act's definition of a threatened species or an endangered species (in this case, is it recovered and will State management retain that recovered status if the Act's protections are removed). We may not consider the reasons why individual wolves may be killed after the species is delisted unless it would affect our analysis of the statutory threat factors.

Conflicts occur wherever wolves and livestock coexist, often regardless of what methods are used to prevent or mitigate those conflicts. Both nonlethal and lethal methods are often temporary solutions to resolve conflicts and seldom provide long-term effectiveness. Under certain circumstances, preventative and nonlethal techniques have been shown to be effective. These include the effectiveness of proactive methods to curb learned behaviors associated with food rewards in wolves (Much et al. 2018, p. 76), the inferred effectiveness of human presence at reducing recurrent depredations in Minnesota (Harper et al. 2008, pp. 782–783), and the adaptive use of multiple preventative and nonlethal methods to minimize sheep depredations in Idaho (Stone et al. 2017, entire). Conversely, lethal control has been demonstrated to be effective at minimizing recurrent depredations through an overall reduction in pack size if conducted shortly after a depredation occurred; however, complete pack removal was most effective (Bradley et al. 2015, pp. 6–9). In addition to the targeted removal of wolves to minimize the potential of recurrent depredations on sheep (Harper et al. 2008, p. 783), the targeted removal of a relatively high number of individuals relative to pack size significantly reduced the probability of recurrent cattle depredations the following year (DeCesare et al. 2018, pp. 8, 10–11). In a review of both nonlethal and lethal methods to mitigate carnivore conflicts, the effectiveness of nonlethal methods to reduce livestock losses ranged between 0 and 100 percent, whereas the effectiveness of targeted, lethal control ranged between 67 and 83 percent (Miller et al. 2016, pp. 3–8). In contrast, another review indicated that lethal control was just as, if not more, effective than most nonlethal methods at mitigating conflict, but that success was more variable when compared to nonlethal methods (van Eeden et al. 2017, p. 29). This indicates that no single method or technique is consistently effective under all conditions to minimize conflict risk. Although continued research is needed (Treves et al. 2016, entire; Eklund et al. 2017, entire; van Eeden et al. 2018, entire), we acknowledge that a depredation management plan that is adaptive and includes a combination of multiple nonlethal and lethal methods may improve its overall effectiveness at minimizing depredation risk (Bangs et al. 2006, entire; Treves and Naughton-Treves 2005, p. 106; Wielgus and Peebles 2014, pp. 1, 14; Miller et al. 2016, p. 7; Stone et al. 2017, entire; DeCesare et al. 2018, p. 11).

Lethal control of depredating wolves is used reactively rather than proactively, often after other techniques to prevent depredations were unsuccessful, to stop current depredations and minimize the potential for recurrence at the local scale while continuing to promote wolf population growth, recovery, sustainability, and/or viability at the landscape scale. As wolf populations have continued to increase in number and expand their range into more agriculturally oriented and human-dominated landscapes, more wolf territories overlap with livestock and humans. This outcome increases both interaction rates and the potential for conflict, which in turn reduces the probability that wolves will persist in these areas long term (Mech et al. 2019, entire). Even so, overall, few wolf packs are implicated in livestock or pet depredations on an annual basis (for example, approximately 20 percent of known packs in the NRM; also see Olson et al. 2015, entire). Thus, how depredating wolves are managed will influence where non-depredating wolves may persist because the removal of the small number that cause conflict may increase tolerance for the remaining wolves that do not (Musiani et al. 2005, p. 884).

The use of lethal control to mitigate wolf conflicts with livestock has been criticized for lacking long-term effectiveness and being too costly (Wielgus and Peebles 2014, entire;

McManus et al. 2015, entire; Lennox et al. 2018, entire; Santiago-Avila et al. 2018, entire). However, lethal control of depredating wolves is not intended to resolve long-term depredation management issues across a large spatial scale (Musiani et al. 2005, p. 885). Rather, it has consistently been used by managers as a short-term response to mitigate recurrent depredations of livestock on a relatively small scale that could not be resolved using other methods. Wielgus and Peebles (2014, pp. 7–14) argued that lethal removal of wolves in one year exacerbated the conflict cycle, which resulted in an increased number of livestock killed by wolves the following year. Subsequent studies have refuted this assertion and found that, when the same data were reanalyzed, the use of lethal control was effective at reducing livestock depredations the following year (Poudyal et al. 2016, entire), and an increasing wolf population was the primary cause of the observed increases in the number of livestock depredations (Kompaniyets and Evans 2017, entire). Others have documented the effectiveness, or lack thereof, of certain lethal control prescriptions used to minimize depredation risk within the same year the control actions were conducted or the year following the control actions (Bradley et al. 2015, entire; DeCesare et al. 2018, pp. 8, 10). As long as wolves and domestic livestock share the landscape, conflict will occur, and depredation management programs that use a combination of proactive and reactive tools are often most effective at minimizing depredation risk.

Although DeCesare et al. (2018, pp. 9–11) concluded that public harvest alone had little effect on the annual recurrence of livestock depredations in Montana, there is some evidence to indicate that the combination of lethal control and public harvest has the potential to reduce the number of confirmed livestock depredations caused by wolves without having a significant impact on wolf populations. For example, the Wisconsin wolf population declined slightly from 815 to 746 animals (an 8 percent decrease) between 2012 and 2015 (wolves were federally delisted between 2012 and 2014). However, during that same time period, verified wolf kills on cattle and the number of farms with verified depredations declined significantly (Wiedenhoeft et al. 2015, pp. 4–5, 12). A similar trend was observed in the NRM when it was delisted in 2011, with the exception of Wyoming. Between 2006 and 2011, an average of approximately 190 cattle depredations was confirmed per year, while between the years of 2012 to 2015, the number of confirmed cattle depredations decreased to an average of about 151 per year (see USFWS et al. 2016, table 7b). Although the number of confirmed cattle depredations in Montana trended slightly upward in 2017 and 2018, the number of reported depredations declined significantly in Montana from a high of 233 in 2009, to approximately 100 or fewer between 2014 and 2018 (Inman et al. 2019, p. 11). Similarly, the number of livestock killed by wolves in Wyoming has declined since wolves were federally delisted in 2017 (WGFD et al. 2020, p. 19).

As a result of the overall reduction in livestock depredations, the number of wolves lethally removed to mitigate conflicts has also generally declined in the NRM States. The Service does not expect confirmed livestock depredations to cease altogether post-delisting, even though States will have the ability to use targeted lethal control and public harvest to manage wolf conflicts and populations, respectively. Rather, we expect there may be a slight decrease in the number of livestock depredations post-delisting, followed by fluctuations around a lower long-term average in subsequent years as managers learn how best to manage wolf populations and conflicts to ensure the long-term survival of the species. Furthermore, if wolves are causing less conflict, it could lead to improved tolerance for wolves and, although annual fluctuations are likely, an overall reduction in the number of wolves lethally removed annually as a result.

For information on the percent of the wolf population removed through agency-directed lethal control as well as wolves taken in defense of property by private individuals and its effect on wolf populations in the Great Lakes area, refer to the Post-delisting Management section of this rule. Also refer to the *Human-caused Mortality* section of this rule for information related to the effects of human-caused mortality, including lethal control, on wolf populations in the NRM post delisting.

Comment 18: One peer reviewer asserted the biological report lacked information on human-caused mortality, human attitudes, and behavior as they relate to human-caused mortality, as well as cumulative effects of mortality and reproductive failure in wolves. As a result, the reviewer believed the threats assessment in the proposal was uninformed by a scientific analysis of the peer-reviewed literature on human-caused mortality. The reviewer recommended the biological report be revised to include scientific information on the patterns and processes of human-caused mortality in wolves.

Our Response: The purpose of the biological report is to provide a concise overview of the changes in the biological status (range, distribution, abundance) of the gray wolf (*Canis lupus*) in the lower 48 United States over the last several decades. A full discussion of human-caused wolf mortality (including human attitudes and behaviors and the effects of take on wolf social structure) and a complete analysis of potential threats facing wolves was included in the proposed rule and has been updated and revised as appropriate in this final rule. Refer to Comments 36 and 19 and revisions made in response to those comments for additional information.

Comment 19: Two reviewers critiqued the discussion related to human behaviors and the inclination to poach wolves post-delisting. Both reviewers provided references for an updated discussion regarding this topic in the proposed rule. One reviewer stated the rule misinterpreted the review by Treves and Bruskotter (2014) regarding tolerance for predators.

Our Response: The Role of Public Attitudes section of this final rule has been updated and revised to include references recommended by both peer reviewers as well as other references that inform the discussion of human behaviors related to wolves and wolf management. As the reviewers recommended, we expanded the discussion in the rule related to human behaviors, how those behaviors are correlated with management, and the inclination to illegally take a wolf based on the listing status of wolves. We also added a section related to overall tolerance for wolves and, we conclude, appropriately reinterpreted the review by Treves and Bruskotter (2014).

We conclude that public tolerance of wolves is likely to improve as wolves are delisted and local residents feel they have input in management of wolf populations. This process has already begun in the NRM States; however, it will likely take time for this increased control over wolf management, and the related sense of ownership, to translate into tangible benefits in improved public opinion. Public acceptance is highest where wolves were not extirpated and where residents have had longer periods of exposure to wolves (Houston et al. 2010, pp. 399–401). However, it is unclear whether this is due to increased knowledge and experience dealing with wolves or to less stringent local management policies

(including public harvest and defense of property regulations).

Comment 20: One peer reviewer and several other commenters recommended that we conduct a population viability analysis (PVA) or other additional modeling exercises or analysis before delisting. The peer reviewer and some of the other commenters further stated that we should provide more support, via a PVA, that a population of 1,251 to 1,440 wolves in Minnesota would be viable.

Our Response: The Act requires that we use the best scientific data available when we make decisions to list, reclassify, or delist a species. However, it does not require that we produce new science to fill knowledge gaps. PVAs can be a valuable tool to help us understand the population dynamics of rare species (White 2000, entire). They can also be useful in identifying gaps in our knowledge of the demographic parameters that are most important to a species' survival. However, the difficulty of applying PVA techniques to wolves has been discussed by Fritts and Carbyn (1995, pp. 28–29) and Boitani (2003, pp. 332–333). Problems include our inability to: (1) Provide accurate input information for the probability of occurrence of, and impact from, catastrophic events (such as a major disease outbreak or prey base collapse); (2) incorporate all the complexities and feedback loops inherent in wild systems and agency adaptive management strategies; (3) provide realistic inputs for the influences of environmental variation (such as annual fluctuations in winter severity and the resulting impacts on prey abundance and vulnerability); (4) account for temporal variation, selective outbreeding, and individual heterogeneity; and (5) address the spatial aspects of extreme territoriality and the long-distance dispersals shown by wolves. Relatively minor changes in any of these input values into a theoretical model can result in vastly different outcomes.

The revised recovery plan for the Eastern Timber Wolf indicated recovery would be achieved when: (1) The survival of the wolf in Minnesota is assured, and (2) at least one viable population (as defined below) of eastern timber wolves outside Minnesota and Isle Royale in the lower 48 United States is reestablished. The recovery plan did not establish a specific numerical criterion for the Minnesota wolf population. While the plan did identify a goal ''for planning purposes only'' of 1,251 to 1,400 wolves for the Minnesota population (USFWS 1992, p. 28), the plan explicitly states that the region's total goals, ''exceed what is required for recovery and delisting of the eastern timber wolf'' (USFWS 1992, p. 27). This planning goal was driven not by minimum estimates of viability, but instead by: Existing populations of 1,550 to 1,750 wolves in Minnesota (USFWS 1992, p. 4), the plan's objective to maintain existing populations (USFWS 1992, p. 24), and existing planning goals by other land managers within Minnesota (USFWS 1992, p. 27). Population viability and sustainability are explicitly discussed in the plan. The plan states a ''viable population'' includes either: (1) An isolated, self-sustaining population of 200 wolves for 5 successive years; or (2) a self-sustaining population of 100 wolves within 100 miles of the Minnesota population (USFWS 1992, pp. 4, 25–26). Furthermore, the plan stated that ''a healthy, self-sustaining wolf population should include at least 100 interbreeding wolves [that would] maintain an acceptable level of genetic diversity'' (USFWS 1992, p. 26). After evaluating all available information, we determine that the best scientific and commercial information available continues to support our conclusion that these recovery goals will ensure that the population does not again become in danger of extinction.

Habitat and Prey Availability

Comment 21: One peer reviewer provided information from Smith et al. (2016) regarding habitat suitability for the gray wolf in the central United States. In particular, the peer reviewer pointed out that while there appears to be suitable habitat in South Dakota and wolves dispersing to that area, breeding has not been documented. They also pointed out that the model used in Smith et al. (2016) did not account for forest cover as an attribute of wolf habitat, which was an important attribute in the Great Lakes area (Mladenoff et al. 2009) and the Rocky Mountains (Oakleaf et al. 2006).

Our Response: We acknowledge that not all wolf habitat models incorporate the same predictor variables. We have updated this final rule to explain that, despite model results of Smith et al. (2016), relatively high densities of livestock and limited hiding cover for wolves (forests) in large portions of the Midwest are likely reasons that wolves have failed to recolonize this area (Smith et al. 2016, pp. 560–561). As indicated in the *Habitat and Prey Availability* section, predictions of suitable habitat generally depict areas with sufficient prey where human-caused mortality is likely to be relatively low due to limited human access, high amounts of escape cover, or relatively low numbers of wolf-livestock conflicts. Models that fail to account for the potential for wolf-livestock conflicts or other conflicts with humans are likely to overestimate the availability of suitable habitat.

Comment 22: One peer reviewer asserted that defining a human behavior (wolf-killing) as a habitat feature is contrary to longstanding ecological practice and not all humans kill gray wolves or even want to kill gray wolves (*e.g.,* Treves et al. 2013). The reviewer stated that human density is a weak correlate of threat to wolves and that the proposed rule should not define a habitat as unsuitable because people live there; rather, an area should be classified as unsuitable only when mortality or failed reproduction are recurrent phenomena.

Our Response: We have clarified that our definition of suitable habitat generally refers to areas with sufficient prey where human-caused mortality is likely to be relatively low due to limited human access, high amounts of escape-cover, or a low probability of conflict with humans and livestock. The standard practice in the development of wolf habitat models is to include the potential for wolf-human conflict (*e.g.,* areas with high human and livestock densities) and areas of higher human-caused wolf mortality (*e.g.,* areas closer to roads and areas without forest cover). Because wolves can occur nearly anywhere with high enough prey densities (including semideveloped landscapes) and low enough human-caused mortality, the inclusion of information on wolf-human conflict is essential to identifying where wolves are likely to persist over time (see Mech 2017).

Comment 23: One reviewer commented that habitat suitability should be measured only at the individual level rather than the population level and further commented that habitat suitability should be defined by observing where reproduction and survival occur. The reviewer pointed to language in the proposed rule that indicated an area of Minnesota was not suitable habitat even though 450 wolves live there, and the reviewer questioned how this area could be unsuitable given the presence of such a large number of wolves.

Our Response: We have clarified our definition of suitable habitat in this final rule. We define suitability to include areas where wolf-human conflict is low enough to allow wolf populations to persist. Wolves are habitat generalists and can reproduce and survive nearly anywhere given sufficient food resources and low enough human-

caused mortality. Therefore, we find that development of a definition that factors in wolf-human conflict is necessary to identify areas where wolf persistence is likely. The reference in our proposed rule to an area in Minnesota containing 450 wolves as being ''not suitable for wolves'' originated from our Revised Recovery Plan. The statement, as written, was not intended to convey that wolves were not capable of surviving there but instead that it was not desirable for wolves to occur there due to greater human density, including a high proportion of intensively farmed areas (USFWS 1992, p. 15). We have edited this final rule for clarity.

Disease and Parasites

Comment 24: One peer reviewer recommended we consider the impacts of chronic wasting disease (CWD) in deer and elk, as they are primary prey species for wolves. They noted that CWD is not currently found in areas with wolf packs, and included a reference to evaluate.

Our Response: We added a discussion of CWD and what we know about its impacts to wolf prey (see the *Habitat and Prey Availability* section).

Post-Delisting Management

Comment 25: One peer reviewer stated that the Service should openly discuss the changes in wolf monitoring methods used by the State of Wisconsin over time (*e.g.,* use of volunteer trackers) and how those changing methods may affect the State's population and growth rate estimates (including differences in standard deviation).

Our Response: Survey methods in Wisconsin have not changed significantly since the Wisconsin Department of Natural Resources began producing annual counts of the State's gray wolf population in winter 1979–1980 (Wydeven 2019b, in litt.).

Comment 26: One peer reviewer proposed changes to the Wisconsin Wolf Management Plan, such as alternative hypotheses about population growth and further analysis and rationale for the population goal.

Our Response: Wisconsin's plan provides for maintaining a population of wolves, which in combination with wolves in Michigan, will comprise a viable population that is not in danger of extinction in the foreseeable future. We conclude that Wisconsin's management plan, as currently written, will accomplish that goal. We recommend that recommendations for ways to improve the States' management following delisting should be discussed with the State management agency.

General

Comment 27: One peer reviewer stated that we did not consider many relevant published articles and did not adequately assess the quality of the evidence we used in reaching our conclusions. The reviewer maintained that we did not adequately consider disagreements within the scientific literature, and that some of the evidence does not meet long-established standards of evidence.

Our Response: In accordance with section 4 of the Act, we are required to make our determinations on a species' status based on the best scientific and commercial data available at the time of the determination. We prepare status assessments and associated reports summarizing the best available information that is relevant to our consideration of whether a species meets the Act's definition of a threatened species or an endangered species. The evidentiary standards we apply are found in our Policy on Information Standards under the Act (published in the **Federal Register** on July 1, 1994 (59 FR 34271)), the Information Quality Act (section 515 of the Treasury and General Government Appropriations Act for Fiscal Year 2001 (Pub. L. 106–554; H.R. 5658)), and our associated Information Quality Guidelines (*http://www.fws.gov/informationquality/*). These provide criteria and guidance and establish procedures to ensure that our decisions are based on the best scientific and commercial data available. They require us, to the extent consistent with the Act and with the use of the best scientific and commercial data available, to use primary and original sources of information as the basis for our status determinations. Primary or original information sources are those that are closest to the subject being studied, as opposed to those that cite, comment on, or build upon primary sources.

The Act and our regulations do not require us to use only peer-reviewed literature. Rather, we may exercise our expert judgment in determining what information constitutes the ''best scientific and commercial data available.'' We use information from many sources, including but not limited to: Articles in peer-reviewed journals, scientific status surveys and studies completed by qualified individuals, Master's thesis research that has been reviewed but not published in a journal, other unpublished governmental and nongovernmental reports, reports prepared by industry, personal communication about management or other relevant topics, conservation plans developed by States and counties, and biological assessments.

Our proposed rule and draft biological report were based on sources that we concluded are: (1) The best scientific and commercial data available at the time of the determination and (2) relevant to a determination of the status of the gray wolf entity under analysis. We evaluated all additional information provided during the public comment period by peer reviewers, governmental agencies, Native American Tribes, the scientific community, industry, and any other interested parties, and we considered the information in developing this final rule and the final biological report, as appropriate.

Biological Report

Comment 28: One peer reviewer recommended the biological report include data on wolf immigration from Canada to support the claim that wolves from Canada will repopulate the Great Lakes area or West Coast States.

Our Response: The biological report references wolves from Canada recolonizing portions of northern Montana beginning in the early 1980s. Long-distance dispersal has also been critical to wolf recolonization in the Great Lakes area (Treves et al. 2009, entire). Furthermore, wolves from British Columbia, along with wolves from the Northern Rocky Mountains are in the process of recolonizing suitable habitats in the West Coast States (Hendricks et al. 2019, entire). We have updated the biological report to cite multiple studies showing that, if human-caused mortality is regulated, wolves have a remarkable ability to recolonize areas with a sufficient prey-base (*e.g.,* Mech 1995, Boyd and Pletcher 1999, Treves et al. 2009, Mech 2017, Hendricks et al. 2019). The discussion of connectivity and immigration from Canada in the biological report is provided to illustrate that wolves in the Great Lakes area and the West Coast States do not function as isolated populations, and that their connectivity with even larger populations in Canada increases their resiliency. We do not anticipate that wolves in the Great Lakes area or West Coast States will be eliminated or reduced such that repopulation will be necessary.

Comment 29: One peer reviewer provided additional information on pack territory sizes, recommending we include more detailed information on territories in the Great Lakes region.

Our Response: In the biological report, we provided the known range of

pack territory sizes (12.7 to 1,003.9 mi^2 (33 to 2,600 km^2)) to show their variability. We do not view the detailed information on pack sizes from individual studies cited by the reviewer to be necessary to our analysis, which relies only on the proposition that territory sizes are variable.

Comment 30: One peer reviewer stated that our biological report misreported human-caused wolf mortality rates from Fuller et al. (2003). The reviewer also recommended citing Stenglein et al. (2015b), stating that their model of the Wisconsin wolf population demonstrates that a 30 percent annual harvest would, on average, reduce the wolf population by 65 percent over 20 years.

Our Response: The percentages provided in the biological report refer to the data analyzed by Fuller et al. (2003). While Fuller et al. (2003) also provides a review of other studies that have investigated sustainable human-caused wolf mortality rates, these rates are within the overall range of sustainable mortality rates provided in the biological report (17 to 48 percent). We added the information from Stenglein et al. (2015b) regarding harvest rates and wolf population reduction.

Comment 31: One peer reviewer advised that we include additional information on source-sink dynamics and provided citations to consider. The reviewer noted that source-sink dynamics have been notable in the Northern Rocky Mountains, especially in northwest Montana and the Greater Yellowstone region, where much ungulate winter range lies outside of protected areas (Fritts and Carbyn 1995). The reviewer also provided several citations on source-sink dynamics in mountain lion populations that they indicated were relevant to wolves. The reviewer also recommended indicating that broad-scale source-sink dynamics over areas larger than many demographic study areas can cause high local mortality rates to appear sustainable because the population is being sustained by immigration from source habitat.

Our Response: We reviewed the citations provided by the reviewer and updated the biological report to include a brief discussion of the role of dispersal and source-sink dynamics in wolf population regulation. Regarding broad-scale source-sink dynamics, we have updated the biological report accordingly.

Comment 32: One peer reviewer stated that the biological report omitted a thorough discussion of suitable habitat in some unoccupied but suitable habitats in parts of the lower 48 United States (*e.g.,* parts of the Pacific Northwest, Colorado, Utah, and the Northeast). They found this omission to be at odds with previous iterations of listing and delisting rules for the gray wolf. The reviewer recommended a more complete analysis of potentially suitable habitat in the lower 48 United States, including a map compiling existing information regarding potentially suitable habitat.

Our Response: We updated the biological report to reflect that suitable, but unoccupied, habitat occurs in parts of the West Coast States, the central Rocky Mountains (inclusive of Colorado and Utah), and the Northeast. However, unoccupied areas were not a focus for our analysis, and this final rule does not rely on recolonization of these areas to support the determination that gray wolves are recovered. Because we are not relying on suitable habitat that is unoccupied for our delisting determination, we find it unnecessary to compile a map of suitable habitat outside the current range. The publications cited in the biological report provide additional information regarding habitat models in specific areas.

Comment 33: One peer reviewer indicated that notable dispersal events should be mentioned in the biological report, as they are relevant to a discussion on metapopulation structure and the recolonization of potential wolf habitat (*e.g.,* northern Rockies to Arizona, dispersal of wolves from Quebec to the Northeastern United States).

Our Response: The biological report references dispersal events of several hundred kilometers. We have added language to the Biology and Ecology section of the report to describe how long-distance dispersal distances relate to recolonization of suitable habitat. We also clarified our discussion of dispersal of wolves from Quebec to the Northeastern United States. While dispersal plays an important role in recolonization of suitable habitat, individual dispersers that do not settle in an area, survive, and reproduce do not substantively contribute to the wolf's metapopulation structure or dynamics.

Comment 34: One peer reviewer sought clarification on the *Washington and Oregon* section of the biological report. The reviewer asked us to more clearly distinguish population information on listed and delisted wolves and how population management in delisted areas affects population growth rates in listed areas.

Our Response: We updated the biological report with additional information on the distribution of wolves with respect to the listed/delisted boundary in Washington and Oregon. We are not aware of any specific studies that have looked at the effect of wolf management in delisted areas on the population growth rates of federally listed wolves adjacent to those delisted areas. However, we have updated the biological report to acknowledge the role source-sink dynamics can play in peripheral, recolonizing wolf populations. We also address potential impacts to dispersal rates in harvested populations. Finally, we cite the latest annual reports from each State as the authority on population growth and distribution of wolves in those States.

Comment 35: One peer reviewer objected to our characterization, in the biological report, of wolf colonization of nearby areas as happening ''quickly.'' They found the term to be ambiguous and recommended replacing it with something more quantitative (*e.g.,* within decades). They also recommended the report acknowledge that the rapidity of population establishment in new areas varies with the extent of intervening unsuitable habitat between the source population and newly colonized area, as evidenced by the delay between initial dispersals and pack establishment in the Cascade Range of the West Coast States.

Our Response: While some recolonization happens within decades, other recolonization events happen even more rapidly depending on the specific circumstances. Therefore, we conclude that it is not appropriate to add a more specific time period. We have added a sentence to the Biology and Ecology section of the biological report to address the comment regarding the rate of recolonization being affected by the extent of intervening unsuitable habitat.

Comment 36: One peer reviewer commented that, in order to allow for a scientific evaluation of the likelihood of a decline in gray wolf populations after delisting, the biological report should include: (1) A comprehensive analysis of all mortality causes within each subpopulation deemed essential to the combined listed entity and (2) a ''thorough examination of cumulative effects across all subpopulations.'' The reviewer further contended that those assessments should be based on peer-reviewed evidence about current and anticipated future (following delisting) causes of mortality.

Our Response: We conducted a thorough analysis, based on the best available scientific data, of the threat factors currently facing the gray wolf in the lower 48 United States and those

that are reasonably likely to have a negative effect on the viability of wolf populations without the protections of the Act. See Summary of Factors Affecting the Species, above. We considered the effects of these factors individually and cumulatively. For clarification purposes, we have added a reference to the discussion in the rule to the biological report.

Policy

Comment 37: Three peer reviewers questioned our definition or use of the term ''range,'' either on its own or in the context of the SPR phrase (or both). One considered our description of the gray wolf's range in the lower 48 United States to be illogical and unclear with respect to distinguishing current range from unoccupied historical range. This reviewer argued that the distinction is necessary to understand what areas are included in the threats analysis and why. Another argued that our definition of ''range'' is problematic because it does not account for the temporal dynamics (changes over time) of a species' range or the difficulties of scale inherent to the ecological concept of ''range.'' In addition, one peer reviewer stated that a ''significant portion'' of range must mean more than half and that, therefore, the gray wolf has not recolonized enough of its range in the lower 48 United States to meet that standard. Another, citing *Desert Survivors* v. *Dep't of the Interior,* F. Supp. 3d 1131 (N.D. Cal. 2018), stated that the central Rocky Mountains (*i.e.,* Colorado and Utah) and the Northeastern United States merit evaluation as significant portions of the range.

Our Response: The ecological concept of ''range'' is complex. Because of these complexities, the Service and the National Marine Fisheries Service (NMFS) published a legally binding interpretation of the term ''range,'' as used in the Act's definitions of ''threatened species'' and ''endangered species,'' in our SPR policy (79 FR 37578, July 1, 2014). Several courts have upheld this interpretation (*Humane Society* v. *Zinke,* 865 F.3d 585 (DC Cir. 2017); *Ctr. for Biological Diversity* v. *Zinke,* 900 F.3d 1053, 1066–67 (9th Cir. 2018); *Desert Survivors* F. Supp. 3d 1131). The Services interpret the term ''range'' in these statutory definitions as the general geographical area occupied by the species at the time USFWS or NMFS makes a status determination under section 4 of the Act (79 FR 37583, July 1, 2014). In other words, we interpret ''range'' in these definitions to be current range, *i.e.,* range at the time of our analysis (see *Definition and Treatment of Range*). We have revised this final rule to clarify how we interpret range and what we consider to be the current range of the gray wolf in the lower 48 United States.

The opinion that the gray wolf has not recolonized enough of its range in the lower 48 United States to reach the standard of a significant portion is inconsistent with Service policy because it equates the term ''range'' in the Act's definitions of ''threatened species'' and ''endangered species'' with historical range. In our status assessments, we assess threats to the species where the species exists. In other words, we assess threats to the species in its current range, including the effects of lost historical range on the species (see Historical Context of Our Analysis and Summary of Factors Affecting the Species). We also consider whether the threats that caused the loss of historical range are still affecting the species within its current range.

Under our SPR policy, the Northeastern United States does not merit evaluation as a significant portion of the species' range because the best available science indicates that this area is unoccupied. However, given the recent report of a group of six wolves in the central Rocky Mountains, we agree with the reviewer that this area merits consideration as a significant portion of the range of the entities evaluated in this rule. We have revised this rule accordingly.

Comment 38: One reviewer considered our treatment of ''range'' and ''significance'' to be inconsistent with *Desert Survivors* v. *Dep't of the Interior* and our treatment of recovery in other species, such as bald eagle and grizzly bear, where we considered geographic distribution in multiple regions. The reviewer indicated that we should present information evaluating the significance of historical range loss on the genetic and demographic structure of the wolf metapopulation as a whole and within specific ecotypes and subspecies. The reviewer also indicated that we should assess the significance of range loss to the broader suite of values (''esthetic, educational, historical, recreational, and scientific'') discussed in the Act's preamble.

Our Response: Our approach in this rule is consistent with *Desert Survivors* and our approach to recovery for other species. The Act requires that we recover listed species such that they no longer meet the definitions of ''endangered species'' or ''threatened species,'' *i.e.,* are no longer in danger of extinction or likely to become so in the foreseeable future throughout all or a significant portion of their range. As explained in our proposed rule and this final rule, there is no uniform definition for recovery or standard methodology regarding how recovery must be achieved (see Gray Wolf Recovery Plans and Recovery Implementation). Gray wolves are a prolific, highly adaptable species capable of dispersing long distances and recolonizing most habitat types, provided those habitats contain sufficient prey and human-caused mortality is managed. Consequently, our recovery strategy for gray wolves in the lower 48 United States consists of recovery of the species in three broad regions (NRM, Southwestern United States, and Eastern United States) that capture different subspecies and habitats. For decades, we have demonstrated a consistent commitment to this strategy.

Additionally, when we evaluate the status of a species, we evaluate the impacts of any loss of historical range on the viability of the species in its current range (see Historical Context of Our Analysis and Determination of Species Status). In other words, we thoroughly assessed the effects of historical range loss on the current and, to the extent it is foreseeable, future viability of the gray wolf entities addressed in this rule based on the best available scientific and commercial data available, consistent with both the Act and case law.

Finally, the Act instructs us to determine whether any species is an endangered species or a threatened species because of any of the five factors identified in the Act. Thus, we may not determine the status of a species based on an assessment of the esthetic, educational, historical, recreational, and scientific value of that particular species to society. Also, lost historical range cannot be a significant portion of the range of any of the gray wolf entities addressed in this rule because, under our SPR policy, ''range'' is interpreted as current range (for additional information, see 79 FR 37578, July 1, 2014).

Comment 39: One reviewer claimed that our consideration of ''significance'' as used in the phrase ''significant portion of its range'' is duplicative of our assessment of whether the combined listed entity is at risk throughout its range, contrary to recent court opinions. The reviewer recommended a definition for ''significance'' that is based on the criteria used to determine significance under the DPS policy. They stated that such a definition would meet the requirements of *Desert Survivors* v. *Dep't of the Interior* and provided an

example of a DPS analysis done for the red wolf (Waples et al. 2018).

Our Response: Our approach to analyzing significance in this rule is consistent with the Act and case law. For the gray wolf entities addressed in this rule, we assessed ''significance'' based on whether portions of the range contribute meaningfully to the resiliency, redundancy, or representation of the gray wolf entity being evaluated without prescribing a specific ''threshold.'' This approach is substantively different from the way we defined ''significance'' in our SPR policy and, therefore, different from the approach evaluated and overturned by the courts.

Further, in developing that SPR policy, we considered using the definition of significance in the DPS policy as a threshold for significant in the SPR phrase. However, we rejected this option because ''it would result in all DPSs being SPRs, rendering the DPS language in the Act meaningless'' (79 FR 37581, July 1, 2014). Thus, we concluded that the threshold for significance must be higher for evaluating SPR than for purposes of the DPS policy (for more information on this topic, see 79 FR 76997–76998, July 1, 2014).

There are several important differences between DPSs and SPRs. First, Congress intended for the DPS authority to be used sparingly (Senate Report 151, 96th Congress, 1st Session). If we find that a species is endangered or threatened in a DPS, we list only the DPS. By contrast, if we find that the species is endangered or threatened in an SPR, we list the entire species (79 FR 37609, July 1, 2014). Second, the significance of a DPS is assessed relative to the taxon to which it belongs (*i.e.,* the DPS must be significant to the taxon as a whole) (61 FR 4725, February 7, 1996), whereas, under our SPR policy, the significance of a portion is assessed in relation to the ''species'' (species, subspecies, or DPS) under analysis. Third, SPRs need not discrete. In other words, SPRs can be biologically connected to and influenced by other populations that, collectively with the portion being evaluated, are not endangered species or threatened species. Consequently, we do not consider the DPS criteria for significance to be a reasonable definition of ''significant'' in the SPR analysis.

Comment 40: One reviewer maintained that we misinterpreted Shaffer and Stein (2000). The reviewer argued that representation applies to a population itself rather than to a population's contribution to the entire species. In other words, that the appropriate question to ask in our SPR analysis is whether a population's absence in a portion of its range would have significant ecological consequences or whether a portion of the species' range includes ecosystems not found elsewhere in the species' range.

Our Response: We view representation as the ability of a species to adapt to changing environmental conditions over time (*i.e.,* the species' adaptive capacity) (Smith et al. 2018, p. 304). While Shaffer and Stein (2000) introduced the concept of representation in the broad context of conserving biodiversity across ecosystems, we apply their concept at the species level, consistent with Smith et al. (2018). We use Smith et al.'s (2018) definition of representation in relation to the Act's definitions of endangered species and threatened species by asking whether the species has sufficient adaptive diversity such that it is not in danger of extinction or likely to become so in the foreseeable future. Adequate representation does not require preservation of all adaptive diversity to meet this standard under the Act. As indicated in Our Response to Comment 39, we assessed the significance of portions of the gray wolf entities addressed in this rule based on whether the portions contribute meaningfully to the resiliency, redundancy, or representation of the gray wolf entity being evaluated, and we consider this approach to be consistent with the Act and case law. We revised this final rule to clarify that we use the concepts introduced by Shaffer and Stein (2000), as refined by Smith et al. (2018) and considered in the context of the Act.

Comment 41: One reviewer questioned our conclusions that the Great Lakes metapopulation contains sufficient resiliency, redundancy, and representation to sustain populations within the combined listed entity over time, and that the relatively few wolves that occur outside the Great Lakes area are not necessary for the recovered status of the combined listed entity. The reviewer argued that these conclusions are contingent on factual omissions and misinterpretations of wolf ecology and genetics. While the reviewer refers to the combined listed entity, their comment could apply to the analysis of other entities now included in this final rule.

Our Response: Our conclusions are based on the best available scientific and commercial data, including information and interpretations provided by this and other peer reviewers. We have revised the discussions in the final biological report and this final rule regarding gray wolf ecology and genetics in order to clarify the basis for our conclusions. Specifically, we have added additional information on these topics, and added a section to the rule (*Genetic Diversity and Inbreeding*) that provides a more in-depth analysis of the potential impacts of delisting on gray wolf genetic diversity. Based on this information, we conclude that the gray wolf entities evaluated in this rule do not meet the definition of an endangered species or threatened species, nor are they likely to meet either definition absent the protections of the Act.

Comment 42: Most peer reviewers questioned the entity we evaluated. One asserted that we could add or remove only species, subspecies, or DPSs from the List and noted that we did not include a DPS analysis of the combined listed entity to determine whether it was a valid entity. Some argued that our treatment of DPSs or ''discreteness'' (or both) was inconsistent, illogical, or unclear, or recommended we conduct DPS analyses on specific populations or areas within the listed entities. One maintained that our DPS analysis of Pacific Northwest wolves was flawed. This same reviewer argued that our approach is inconsistent with previous wolf rulemakings and recovery planning with respect to treatment of the central Rocky Mountains and the Northeastern United States because we did not consider or treat these areas as DPSs or include a substantive discussion of either area as potential habitat. Another peer reviewer stated that regions considered in-depth in previous rulemakings and other documents (*e.g.,* the central Rocky Mountains and Northeast) were only mentioned in passing in the proposed rule.

Our Response: In our March 15, 2019, proposed rule, we explained that neither of the currently listed entities qualifies as a DPS. In this final rule we expand on that discussion and also explain why we are considering the status of gray wolves in several different configurations. (see The Currently Listed *C. lupus Entities* Do Not Meet the Statutory Definition of a ''Species'' and *Why and How We Address Each Configuration of Gray Wolf Entities*). We did not conduct a DPS analysis of Pacific Northwest wolves (or wolves in any other subset of the entities we assessed) in our proposed rule or this final rule. Rather, we discuss the Pacific Northwest DPS analysis we conducted in 2013, in the context of summarizing background information about actions we have undertaken relevant to our

national wolf strategy (see *National Wolf Strategy*). We also reference this 2013 DPS analysis when we discuss the lack of discreteness of these wolves and NRM wolves (see The Currently Listed *C. lupus* Entities Do Not Meet the Statutory Definition of a ''Species'').

Our approach is consistent with previous wolf recovery planning efforts, which have consistently focused on three areas—the NRM, Eastern United States, and Southwestern United States—as reflected in our past actions. As shown in table 1, since 1978 our wolf recovery plans, reintroduction efforts, and reclassification or delisting rules have focused on these three areas. We have revised the language in this final rule and, where appropriate, provided more detailed information in our biological report to help clarify our approach in this rule. With respect to potential habitat in the Northeastern United States, we also clarify that our approach is to focus our assessment of suitable habitat and prey availability on areas currently occupied by wolves. New information on wolves in the central Rocky Mountains since publication of our proposed rule indicates the presence of a group of six or more wolves and the long-term presence of an individual radio-collared wolf. Thus, new information indicates that gray wolves currently occupy Colorado. Therefore, we have added an analysis of habitat in the central Rocky Mountains to this final rule. We acknowledge the existence of suitable habitat in areas outside of gray wolf current range, but we do not consider them in-depth because we are not relying on those areas for our status determinations.

Comment 43: One peer reviewer contended that, in not evaluating the status of subspecies, we are sidestepping the commitment made in our 1978 reclassification rule to ''continue to recognize valid biological subspecies for purposes of . . . research and conservation programs,'' and that we are delisting the gray wolf in the lower 48 United States based on the recovery of one subspecies, *C. l. nubilis.* Citing Hendricks et al. 2018, they argued that, for example, our approach does not consider threats to the coastal rainforest ecotype that has colonized the U.S. Pacific Northwest and overlaps with the distribution of *C. l. fuscus.*

Our Response: Delisting the currently listed gray wolf entities based on the status of gray wolves in any of the three configurations we analyzed is consistent with our 1978 commitment to conserve subspecies. The 1978 reclassification was undertaken because of uncertainty about the taxonomic validity of some of the previously listed subspecies, and because we recognized that wolf populations were historically connected and that subspecies boundaries were thus malleable and populations admixed. The rule predated the November 1978 amendments to the Act (which replaced the ability to list ''populations'' with the ability to list ''distinct population segments'') and, therefore, at the time of the 1978 rule, listable entities included ''populations.'' The 1978 rule stated that ''biological subspecies would continue to be maintained and dealt with as separate entities'' (43 FR 9609, March 9, 1978), *i.e.,* subspecies or populations. Subsequent recovery plans and all gray wolf rulemakings since then have focused on units that are consistent with the stated intent of the 1978 rule to manage and recover the different gray wolf groups covered by the 1978 listings as ''separate entities'' (43 FR 9609, March 9, 1978). Within 4 years of the 1978 rule, we developed recovery plans for wolf populations in the following regions of the United States: The northern Rocky Mountains, the East, and the Southwest (table 1). Since then, the NRM wolf population (now metapopulation) has recovered (74 FR 15123, April 2, 2009, entire; 77 FR 55530, September 10, 2012, entire), the southwest wolf population is protected under a separate subspecies listing as endangered (80 FR 2488, January 16, 2015, entire), and the Great Lakes wolf population (now metapopulation) is recovered. It was never our intent to recover wolves throughout the entire geographic area encompassed by the 1978 listings. Instead, we have focused on recovering the different gray wolf groups covered by the 1978 listings as ''separate entities.''

With respect to Pacific coastal rainforest wolves, wolves that recolonized Washington and Oregon originate primarily from the interior forest ecotype, which is more indicative of wolves from southeastern British Columbia, southwestern Alberta, or the NRM (Hendricks et al. 2019, p. 138, Supplemental table S2). Of the 54 wolves from Washington and Oregon that Hendricks et al. (2018) sampled, 2 possessed mitochondrial DNA haplotypes only known from wolf populations in coastal British Columbia. Only one of the two wolves with the coastal haplotype resided in the west coast portion of the entity currently listed as endangered (44-State entity) and, consequently, the combined listed entity, in an area considered highly suitable for coastal wolves. The other resided within the boundary of the NRM DPS in the interior of northeast Washington. Furthermore, based on an assessment of single nucleotide polymorphisms (SNPs), three of the five wolves from Washington were intermediate between NRM wolves and coastal wolves, indicating that Washington was an admixture zone for coastal and inland wolf ecotypes (Hendricks et al. 2018, p. 8). Thus, rather than dispersal and recolonization of wolves from a specific ecotype to that same ecotype, these results demonstrate the ability of wolves to disperse to, inhabit, and survive in a variety of habitats that may be very different from where they or their parents originated. It also indicates that wolves from coastal and inland ecotypes interbreed in admixture zones (Hendricks et al. 2018, entire). We analyzed threats to the gray wolves inhabiting Pacific coastal rainforest ecosystems in our 2016 assessment of the status of the Alexander Archipelago wolf and found that these wolves are not in danger of extinction or likely to become so in the foreseeable future (81 FR 435, January 6, 2016, entire).

Comment 44: Referring to the combined listed entity, one reviewer stated that, while the Act does not require species to be restored everywhere, recovery in one region (the Great Lakes area) is not sufficient to delist a species formerly distributed across the continent. The reviewer asserted the rule is an effort to advance broader shifts in interpretation of the Act for widely distributed species.

Our Response: As discussed in this final rule and the final biological report, gray wolves are recovered in each of the two currently listed entities, in the two currently listed entities combined into a single entity, and in the lower 48 United States entity. They currently exist in two large, growing or stable metapopulations—one in the Great Lakes area and one in the Western United States—that are interconnected with even larger populations of wolves in Canada. The core of the former occurs in the Great Lakes States of Minnesota, Wisconsin, and Michigan, and the core of the latter occurs in the western States of Idaho, Montana, and Wyoming. The western United States metapopulation is currently recolonizing western Washington and western Oregon, has begun to recolonize California, and is in the early stages of recolonizing Colorado. Moreover, dispersing wolves have been detected in all the States in historical gray wolf range west of the Mississippi River except Oklahoma and Texas. Continued wolf dispersal across western States demonstrates that gray wolves could eventually find most large

patches of suitable habitat in the west as long as healthy core wolf populations are maintained on the landscape.

In addition to the metapopulations of gray wolves in the Great Lakes area and the Western United States, the Mexican wolf (*C. lupus baileyi*) inhabits the Southwestern United States (Arizona and New Mexico) and Mexico. The population in Arizona and New Mexico is small but growing, and there is an establishing population in Mexico. These wolves are listed separately as an endangered species and are unaffected by this rule; they will remain on the List until the subspecies has recovered.

The standard for listing or delisting a species under the Act is whether it meets the Act's definition of an endangered species or a threatened species. The Act defines an endangered species as ''any species which is in danger of extinction throughout all or a significant portion of its range'' and a threatened species as ''any species which is likely to become an endangered species within the foreseeable future throughout all or a significant portion of its range.'' Neither the Act nor our regulations require that a listed species be restored to any threshold amount of its historic range before it may be delisted. Based on our analysis of the best available scientific and commercial data, we have determined that each of the gray wolf entities evaluated in this rule is not in danger of extinction, or likely to become so in the foreseeable future, throughout all or a significant portion of its range (see Determination of Species Status).

Comment 45: One peer reviewer considered our treatment of connectivity between wolves in the West Coast States portion of the combined listed entity (referred to by the reviewer as the Pacific Northwest) and the NRM to be inconsistent and problematic. According to the reviewer, we state in our proposed rule that we do not discuss management in the NRM because the NRM is legally a distinct entity but also find that West Coast States wolves are superfluous to the gray wolf entity because the NRM population provides demographic support to them.

Our Response: We considered the comments of this peer reviewer, and other commenters, and we have modified our approach in this final rule (see Summary of Changes from the Proposed Rule). We evaluate the status of gray wolves in three different configurations, including a lower 48 United States entity (see *Why and How We Address Each Configuration of Gray Wolf Entities*).

Comment 46: One peer reviewer considered our use of the term ''eastern wolf''—to denote wolves in the Great Lakes area or the Northeast—to be inappropriate. According to the reviewer, the term ''eastern wolf'' should refer only to the genetically distinct wolves living in and around Algonquin Provincial Park in Canada. The same reviewer also indicated that our decision to consider eastern wolves to be members of the species *C. lupus* was arbitrary and disregards the precautionary principle. They stated that there is considerable evidence that a distinct eastern wolf originally existed in the Eastern United States and no solid evidence that gray wolves historically lived in the Eastern United States outside the Great Lakes region, though they noted that the historical occurrence of gray wolves in the eastern States is uncertain. The reviewer further stated that there is general scientific agreement that eastern wolves and red wolves deserve separate conservation consideration as unique ecotypes, ecological surrogates, DPSs, or species, and that Federal protection may be needed in the Eastern United States to protect and recover the endangered red wolf and the eastern wolves found in and around Algonquin National Park that are listed in Canada as threatened.

Our Response: Many scientists have long considered eastern wolves to be distinct from coyotes and gray wolves in the Western United States. However, the correct taxonomic assignment and evolutionary origin of the eastern wolf is uncertain. Scientists have variously described the eastern wolf as a species, a subspecies of gray wolf, an ecotype of gray wolf, the product of hybridization between gray wolves and coyotes, the same species as the red wolf, or a hybrid between red wolves and gray wolves (see *Taxonomy of Gray Wolves in North America*). We originally listed the gray wolf subspecies *C. l. lycaon,* the eastern timber wolf, in 1967. We continued to recognize this subspecies—and the Northeastern United States as part of its historical range—for years, as evidenced by both our original (1978) and revised (1992) Recovery Plan for the Eastern Timber Wolf. In 2013, we proposed recognizing the species *C. lycaon,* occurring in southeastern Canada and, historically, the Northeastern United States, in our proposed rule to delist *C. lupus* and list *C. l. baileyi* as endangered (table 1). However, peer reviewers of that proposed rule considered the scientific basis for recognizing *C. lycaon* as a species to be insufficient. They noted that this is an area of active scientific research with frequent studies published yearly, and stated that the proposed recognition of these wolves as a species was premature (National Center for Ecological Analysis and Synthesis 2014, unpaginated). Debate on the subject in the scientific community and, consequently, the taxonomy and evolutionary history of eastern wolves remains unresolved (USFWS 2020, pp. 1 2012;3). Therefore, in this rule we continue to recognize wolves in the Northeastern United States as members of the species *C. lupus.* We conclude that this is appropriate based on our review of the best available scientific and commercial information. Our decision results in a much larger historical range to the gray wolf entities evaluated than if we considered eastern wolves to be a distinct entity or members of the red wolf species.

The reviewer also argues that Federal protection may be needed for wolves in the Eastern United States, to protect dispersers or allow for reintroductions of the endangered red wolf and the eastern wolves found in and around Algonquin National Park that are listed in Canada as threatened. In 1967, we listed the red wolf as endangered wherever found, except where listed as an experimental population (32 FR 4001, March 11, 1967). The species remains on the List and, consequently, already receives the protections of the Act. The rest of the combined listed entity (and 44-State entity and lower 48 United States entity), which includes the Northeastern United States, does not warrant the protections of the Act because, as indicated in this rule, we have determined that it does not meet the Act's definition of a threatened species or endangered species (see Determination of Species Status).

State and Federal Agency Comments

Recovery and Delisting

Comment 47: The Governor of Oregon indicated her belief that wolf recovery in Oregon is a success and that wolves are on the path to recovery. She also noted that the State of Oregon and other States can help lead to recovery of the species across a significant portion of its historical range. She expressed that wolves are wide-ranging, and as Oregon's wolves venture into California and return, they warrant the protection of the Federal Endangered Species Act during their travels.

Our Response: Gray wolves (excluding Mexican wolves) are currently distributed in two large and expanding metapopulations in the lower 48 United States. Based on our thorough review of the species' status, threats, and existing regulatory mechanisms, we

have determined that none of the gray wolf entities we evaluate in this rule (including either of the currently listed gray wolf entities) meet the definition of a threatened species or endangered species under the Act (see Determination of Species Status). Regarding wolves that move between California and Oregon after delisting, these individuals will still be afforded protections under the California Endangered Species Act and the Oregon Wolf Conservation and Management Plan.

Comment 48: The California Department of Fish and Wildlife indicated that wolves in California are in the initial stages of reestablishment and that recovery in the State relies on conservation and management measures provided by Federal listing.

Our Response: Consistent with the Act, we are removing the currently listed gray wolf entities from the List because we have determined that gray wolves in these entities do not meet the definition of threatened or endangered (see Determination of Species Status). However, we expect wolves will continue to recolonize suitable habitat in California under State management. See the Post-delisting Management section of this rule for additional information.

Biology, Ecology, Range, Distribution, or Population Trends

Comment 49: The Arizona Game and Fish Department recommended that we add Arizona and New Mexico to the list of States with confirmed records of dispersing gray wolves, referencing information provided in Odell et al. 2018.

Our Response: We did not recognize Arizona as a State having a confirmed record of a dispersing gray wolf because the wolf documented in Arizona subsequently died in Utah and was included in Utah's totals. We have updated our final rule and biological report to include Arizona as an additional State with a confirmed record of a dispersing gray wolf, noting that the wolf later died in Utah and was also included in their total. With respect to the report relating to New Mexico (Odell et al. 2018, p. 294), we agree it seems plausible that the animal observed was not a Mexican wolf based on its black pelage, which has not been reported in Mexican wolves. However, because this has not been confirmed as a gray wolf, we decline to add New Mexico to the list of States with ''confirmed'' gray wolf dispersal.

Taxonomy

Comment 50: The Michigan Department of Natural Resources stated that we put too much emphasis on Mech and Paul (2008) in our discussion of taxonomy, and should instead rely on Heppenheimer et al. (2018).

Our Response: As noted in the rule, canid taxonomy remains unsettled, despite being relatively well-studied, even using advanced molecular techniques. We reviewed and cited Heppenheimer et al. (2018), along with a number of other genetic studies, in conducting our assessment of wolf taxonomy.

Human-Caused Mortality

Comment 51: The Arizona Game and Fish Department, the Michigan Department of Natural Resources, and one public commenter indicated that the discussion about additive and compensatory mortality relied too much on information provided by Creel and Rotella (2010) and failed to discuss a rebuttal by Gude et al. (2012) or use the best available information when discussing the effects of mortality on wolf populations. Additional references were provided for the discussion. Another public commenter supported the notion that human-caused mortality was super-additive and noted its effects on wolf population dynamics.

Our Response: Based on the comments and information we received, we revised and updated the *Human-caused Mortality* section. In short, Creel and Rotella (2010) indicated that wolf populations can be harvested within limits, but that human-caused mortality was strongly additive to total mortality, and, based on their model predictions, population growth would decline as human-caused mortality increased. In contrast, using the same dataset, Gude et al. (2012) demonstrated that wolf population growth remained positive in Montana, which was also supported by field observations, and that variations in growth were strongly influenced by annual recruitment. Gude et al. (2012) also discussed the limitations of traditional monitoring techniques in addition to the need to create more efficient and accurate monitoring methods to improve population estimation techniques as wolf populations continue to increase and expand. For further information, see the *Human-caused Mortality* section of the rule.

Comment 52: The California Department of Fish and Wildlife expressed views concerning the added value of the Act's protections in deterring illegal take of wolves under California law. In addition, the California Fish and Game Commission questioned the completeness of our discussion of the role of public attitudes as it relates to human-caused mortality and recommended additional information for consideration.

Our Response: While the Service respects the belief that continued Federal protections would provide an additional deterrence to illegal take under existing California law, the Act requires the Service to make status determinations based on whether the species meets the definition of an endangered species or a threatened species because of the five statutory factors. Gray wolves have been illegally killed both with and without the protection of the Act (*i.e.,* illegal under other State or Federal rules or regulations), and, although some researchers (Treves et al. 2017b) and most wildlife managers would agree that known illegal take is likely biased low, several studies have estimated that around 10 percent of the known population is illegally taken annually in the NRM (Smith et al. 2010, p. 625; Ausband et al. 2017a, p. 7), Michigan (O'Neil 2017, p. 214), and Wisconsin (Stenglein et al. 2018, p. 104). However, wolf populations remain robust and recovered in these locations, and wolves continue to recolonize new areas of suitable habitat in the West Coast States and have begun to recolonize the central Rockies. Furthermore, it has been demonstrated that illegal take was greater during periods of Federal protections in Wisconsin compared to periods when the wolf was delisted (see Olson et al. 2014). Surveys also indicate that members of the public are more trusting of their State fish and wildlife agencies than their State or Federal Government (Manfredo et al. 2018, pp. 8, 58–68). Thus, they may be less inclined to illegally take a wolf, and be more accepting of wolves on the landscape, if they perceive that State management provides more options to mitigate conflicts. For further information, see Our Responses to Comment 14, as well as Comment 19. Also see ''The Role of Public Attitudes'' in the *Human-caused Mortality* section of this final rule.

Comment 53: The U.S. Department of Agriculture, Animal and Plant Health Inspection Service, Wildlife Services (Wildlife Services) commented that the ability to mitigate losses associated with wolves has contributed to wolf recovery in both the northern Rocky Mountains recovery area and Great Lakes region. Wildlife Services stated that in the Northern Rocky Mountains recovery area (Wyoming, Idaho, Montana), where

wolves have been delisted and State wildlife agencies have assumed management authority, populations continue to exceed recovery goals and wolf-livestock conflicts and associated management costs have declined in those States. They contended that these trends provide strong evidence that wolves and related conflicts can be managed under State authority without the Act's protections. They further stated that effective response to wolf conflicts is a key component to building and maintaining public value of wolves and that the Act's restrictions on methods for conflict management have led to frustration in communities where conflicts occur, especially in Michigan and Wisconsin, where limits on methods are most restrictive. They concluded that the increased management options associated with delisting will facilitate prompt, effective response to conflicts and enhance public acceptance of wolf populations.

Our Response: The Service agrees that State wildlife agencies are fully capable of managing for sustainable wolf populations while concurrently working with Wildlife Services to minimize conflicts caused by wolves using the full suite of mitigation response techniques available post-delisting. For further information, see Our Responses to Comment 17 and Comment 52.

Comment 54: Wildlife Services noted that the Great Lakes population of gray wolves in Minnesota, Wisconsin, and Michigan is nearly four times that of the Northern Rockies population, and conflicts can be more effectively managed without the restrictions imposed by protection under the Act. Great Lakes wolf populations have exceeded recovery goals and continue to thrive. However, the region has also experienced an increase in the number, diversity, and distribution of wolf conflicts. Minnesota wolf populations have exceeded 2,600, nearly double Federal recovery goals and 1,000 more than State management goals. Wolf conflicts in Minnesota have increased 42 percent since wolves in Minnesota were returned to threatened status following a 2-year period of State management from 2012 to 2014. In Michigan, wolf population growth has slowed and stabilized around 650 for the past few years following several hard winters that have depressed deer herds. However, the Michigan wolf population exceeds recovery goals by 343 percent, and suitable habitat is saturated. Wolf populations also continue to grow in Wisconsin where the 2018–2019 overwinter minimum wolf count was 914 to 978 wolves in 243 packs, a 1 percent increase over the 2017–2018 winter count. In Wisconsin, issues associated with wolves have continued to increase since 2014, including: 12 percent increase in total verified wolf complaints, over 36 percent increase in attacks on domestic dogs, and a 24 percent increase in farms with verified livestock losses. Wisconsin noted more than a 24 percent increase in depredation payments from 2017 to 2018 that totaled over $134,000 in compensation. Suitable habitat in Wisconsin is occupied by wolves, and continued population growth will likely occur in areas where human-livestock-wolf conflicts will increase. Continued Federal listing of Great Lakes wolves will hamper effective management of wolf conflicts in that region.

Our Response: The Service appreciates the role that Wildlife Services has played in the recovery of gray wolves in the Great Lakes area and elsewhere, as well as the expertise and assistance personnel from the agency provide to mitigate wolf-related conflicts using both nonlethal and lethal means. We concur with the points raised related to wolf populations and wolf-related conflicts in the Great Lakes area. For further information, see Our Responses to Comment 17 and Comment 52.

Comment 55: The Wisconsin Department of Natural Resources pointed out that they have committed significant resources to ensure that decisions are based on sound science across the spectrum of ecological and social issues involved. The Wisconsin Department of Natural Resources contended that Holsman (2014) clearly summarized public attitudes regarding wolves in Wisconsin and importantly noted that, while the majority of residents have positive attitudes toward wolves, there is reduced tolerance for wolves living outside of heavily forested areas of the State and wide support for lethal wolf control as a response to livestock depredations and human safety concerns.

Our Response: We greatly appreciate the commitment and longstanding contributions by Wisconsin to wolf conservation, recovery, and management in the State. We also understand the diversity of opinions that surround wolves and wolf management (also see Our Response to Comment 19 and the section titled ''The Role of Public Attitudes'' in the *Human-caused Mortality* section of this final rule) and conclude that Wisconsin is well-equipped to manage a recovered wolf population with a full understanding of these diverse opinions.

Effects of Climate Change

Comment 56: The Arizona Game and Fish Department noted that while Hendricks et al. (2018) reports potential effects on wolf prey from increased risk of fire arising from climate change, fire can actually improve conditions such that areas are able to support higher densities of ungulate prey after fire. Additionally, the Arizona Game and Fish Department indicated that milder winter conditions in northern latitudes under climate change scenarios (citing Rivrud et al. 2019) will increase ungulate ranges and biomass available for wolves.

Our Response: The referenced paper (Rivrud et al. 2019, entire) is based on a study of red deer (*Cervus elaphus*) use of winter and summer habitats in Norway. The authors found that reduced snow cover as a result of global warming would increase habitat suitability and ranges of ungulate prey at their northern distribution limits (Rivrud et al. 2019, p. 1). While this study may not be directly applicable to the gray wolf entities addressed in this rule based on geographic locale, we understand the Arizona Game and Fish Department's view to be that there may be beneficial effects from fire on wolves due to changes in habitat suitability and localized expansion for ungulate prey and that there is potential for new areas to become accessible to ungulate prey via reduced snow cover. The degree and the future timeframe in which such effects might take place, however, are unknown. In addition, regulation of population dynamics in ungulates is complex and unlikely to be driven by climate factors alone. See Our Response to Comment 102 for more discussion of ungulate populations. Moreover, wolves are highly adaptable and are expected to readily respond to climate-related changes in prey populations or other factors.

Genetics

Comment 57: The California Department of Fish and Wildlife expressed concern about the potential risks inherent in small wolf populations within the State, including the risk of low or decreasing genetic diversity.

Our Response: Expanding populations, including the wolves in California, may be exposed to different pressures than core populations, including the potential for reduced genetic diversity, Allee effects, or founder effects. To more thoroughly examine issues of genetic diversity and how they may impact wolf viability across the range, we added the section *Genetic Diversity and Inbreeding* to this

rule. As we note in that section, despite the potential for such genetic effects in California, the overall viability of the gray wolf entities addressed in this rule are unlikely to be significantly impacted. Also see the final biological report (USFWS 2020, pp. 18–19) for a discussion of the various locations from which California's wolves have descended.

Post-Delisting Management

Comment 58: The California Department of Fish and Wildlife expressed concern that hunting seasons would be initiated by a number of States if the proposed rule is finalized. They stated that lethal management has been used in response to suspected depredations in other States and that the ability of gray wolves to occupy their full historical range will be hindered by hunting and lethal management. They further stated that Federal protection of wolves from source populations outside of California is important for wolf recovery in the State. They stated they would like to see continued Federal protection of gray wolves to allow for continued expansion into California and other States.

Our Response: As demonstrated by current State management of wolves in Idaho, Montana, and Wyoming, it is unlikely that moderate increases in human-caused mortality will cause dramatic declines in wolf populations across the ranges of the gray wolf entities addressed in this rule. Even if human-caused mortality increases after delisting, we expect dispersing wolves to continue to move into and out of the West Coast States and recolonize vacant suitable habitat. The effects of increased human-caused mortality on wolf dispersal is discussed in the *Human-caused Mortality* section of the rule. Also, see Our Responses to Comments 45, 16, and 15.

Comment 59: The Minnesota Department of Natural Resources commented that, since the 1980s, their agency has employed specific staff dedicated to wolf research and management, including implementation of the State's wolf management plan. Staff continues to contribute to the conservation of wolves in Minnesota through coordinating management, enforcing the prohibition against illegal take, investigating livestock depredation claims, and conducting population monitoring and research. The Minnesota Department of Natural Resources' conservation officers continue to enforce the requirements of the Wolf Management Act. Additionally, the Minnesota Department of Agriculture administers a compensation fund that provides payments in instances where wolves cause confirmed damage to livestock. Currently Minnesota spends approximately $250,000 per year on wolf depredation management, excluding staff time.

Our Response: We thank the Minnesota Department of Natural Resources for this information supporting the fact that they have invested a significant amount of time and resources into managing the State's wolf population while wolves were federally listed and we fully support the State's ability and commitment to sustainable wolf management following delisting.

Comment 60: The Minnesota Department of Natural Resources reconfirmed their commitment to the long-term conservation of wolves and affirmed that, should the gray wolf be delisted in Minnesota, they will manage the species for its long-term sustainability and for the benefit of both present and future generations of Minnesotans. Moreover, the Minnesota Department of Natural Resources indicated they are further committed to managing gray wolves in Minnesota to contribute to the success of wolf recovery beyond the State.

Our Response: We greatly appreciate the longstanding contributions of the State of Minnesota in wolf conservation and its commitment to continued sustainable wolf management following delisting.

Comment 61: The North Dakota Game and Fish Department commented that wolves are listed as a ''fur-bearer'' with a closed season per State regulations. The status of wolves in North Dakota will remain such even after they are delisted, unless a significant change in the species distribution or population status is documented in the future. However, the removal of Federal protections for gray wolves would allow the North Dakota Game and Fish Department the ability to timely and responsibly manage transient wolves should they depredate livestock in the future. Additionally, it would alleviate public interpretation difficulties associated with having wolves federally protected in North Dakota even though their jurisdiction is not part of one of the recognized populations, nor is it a target for future recovery actions.

Our Response: We appreciate the North Dakota Game and Fish Department's ability and commitment to manage wolves that enter the State via dispersal as a fur-bearer with a closed season and support their decisionmaking and ability to manage conflicts with wolves should they occur post-delisting.

Comment 62: The Utah Division of Wildlife Resources and one commenter indicated that the proposed rule failed to acknowledge or analyze wolf management plans for those States outside of the currently occupied range. They believed this analysis should be included to address concerns that States will not manage for wolves, once delisted. The Utah Division of Wildlife Resources also described Utah's wolf management plan goals and objectives, and when certain phases of the plan will be implemented to manage wolves that naturally recolonize the State. They also described staff preparedness and monitoring efforts that would occur if wolves were to recolonize the State. Furthermore, the Utah Division of Wildlife Resources stated that they have baseline information on big game populations that could be used to understand wolf-prey relationships in Utah, as well as programs to provide assistance to livestock producers.

Our Response: The Service recognizes the preparation and willingness of the Utah Division of Wildlife Resources to responsibly manage and monitor wolves that naturally recolonize the State post-delisting. We also appreciate their commitment to provide assistance to livestock producers to minimize conflict risk and to provide compensation for wolf-caused livestock losses, as well as their ability to evaluate the impact wolves may have on ungulate populations while continuing to adaptively manage for sustainable big game populations. An analysis of wolf management plans was conducted for States within the current range of the gray wolf and can be found in the Post-delisting Management section of this rule. Due to recent information confirming the presence of a group of six wolves in extreme northwest Colorado, and their proximity to and potential use of habitats within Utah, we conducted an analysis of the Colorado Wolf Management Recommendations and the Utah Wolf Management Plan (see Post-delisting Management). We did not consider management in States outside of the current range, other than Utah, because wolves are not expected to persist long term in most of those States.

Policy

Comment 63: The California Fish and Game Commission asserted that the proposed rule does not address the absence of gray wolf populations in most of the species' historical range. They expressed concern that we interpret ''range,'' within the Act's definitions of ''endangered species'' and ''threatened species,'' as current range.

They stated that this creates a shifting baseline, discounts historical habitats in California and elsewhere, and ignores science and the law. Also, the Michigan Attorney General indicated that, as a result of the court opinion issued in *Desert Survivors* v. *U.S. Dep't of the Interior,* 336 F. Supp. 3d 1131, 1137 (N.D. Cal. 2018), the SPR phrase in the Act's definition of ''endangered species'' carries its ordinary meaning. Citing *Defenders of Wildlife* v. *Norton,* 239 F. Supp. 2d 9, 21 (D.D.C. 2002), the Michigan Attorney General asserted that the Service must explain its conclusion that an area in which a species can no longer live is not a significant portion of its range.

Our Response: We describe our interpretation of range and our rationale for this interpretation in detail in our SPR policy, which is legally binding (79 FR 37578; July 1, 2014). Per that policy, we interpret the term ''range'' in the Act's definitions of ''endangered species'' and ''threatened species'' to be the general geographical area occupied by the species at the time the U.S. Fish and Wildlife Service or National Marine Fisheries Service makes a status determination under section 4 of the Act (79 FR 37583, July 1, 2014). In other words, we interpret ''range'' in these definitions to be the current range. Three recent court rulings have upheld our interpretation (see Our Response to Comment 37).

We assume the Michigan Attorney General's statement that ''the Service must explain its conclusion that an area in which a species can no longer live is not a significant portion of its range'' refers to our conclusion that a species' unoccupied historical range cannot be a significant portion of its range. The cited case, *Defenders of Wildlife* v. *Norton,* pre-dates our SPR policy, which interprets the term ''range'' in the Act's definitions of ''endangered species'' and ''threatened species'' as current range. Based on that interpretation, if a portion of historical range is not occupied, then it is not part of the species ''range'' (*i.e.,* current range) and thus cannot be a portion (significant or not) of that range. In response to several comments related to our interpretation of ''range,'' we have clarified our definition and treatment of range in this final rule (see *Definition and Treatment of Range*).

Comment 64: The California Fish and Game Commission indicated that establishing and maintaining robust gray wolf populations in suitable habitat across the species' historical range can help ensure long-term survival of the species and recovery success. They expressed concern that, if the species is delisted, populations could potentially stop growing or even decline due to hunting and lethal management.

Our Response: We agree that broadly distributed, robust populations help ensure the long-term survival of a species. Gray wolves have recovered in two broad regions of their historical range in the lower 48 United States (the Great Lakes States and the NRM region), and the Mexican wolf will remain listed in a third broad region. In the Great Lakes and the NRM, wolves occur as large metapopulations distributed in suitable habitat across several States. Based on an analysis of the best available data, we have determined that none of the gray wolf entities evaluated in this rule are in danger of extinction, or likely to become so in the foreseeable future, throughout all or a significant portion of its range (see Determination of Species Status). Although we acknowledge that human-caused mortality is likely to increase post-delisting as some States with viable gray wolf populations begin to manage wolves under the guidance of their State management plans, it is unlikely that moderate increases in human-caused mortality will cause dramatic declines in wolf populations across the gray wolf entities evaluated in this rule (see Our Response to Comment 16).

Comment 65: The California Fish and Game Commission asserted that Federal policy should reflect a greater commitment to active gray wolf recovery efforts, identifying and protecting critical habitat and movement corridors, maintaining a population level consistent with ecosystem functionality, and implementing innovative policy and guidance to reduce lethal control as a management strategy.

Our Response: We have been strongly committed to gray wolf recovery since the 1970s. As a result of our commitment and the commitment and recovery efforts of our State, Federal, and Tribal partners, the gray wolf entities evaluated in this rule do not meet the Act's definition of an endangered species or of a threatened species. Therefore, we are removing the currently listed *C. lupus* entities from the List. (See Our Responses to Comments 44 and 42).

Comment 66: Referring only to the gray wolf entity currently on the List as endangered (the 44-State entity), the Michigan Attorney General contended that the proposed delisting rule does not meet the Act's requirements because it does not include a complete five-factor analysis for the current range of the gray wolf in that entity. The Michigan Attorney General noted that we explain why gray wolves are no longer in danger of extinction in portions of Michigan and Wisconsin, but fail to analyze whether gray wolves currently living in other States are in danger of extinction throughout all or a significant portion of the entity's range. For example, the Michigan Attorney General stated that we did not investigate the effects of human-caused mortality on gray wolves in North Dakota, South Dakota, Utah, Colorado, Nevada, Missouri, Indiana, Illinois, Nebraska, or Kansas, and asserted that we withdraw the proposed rule and allow the Michigan Department of Natural Resources to lead other States, by example, in managing the gray wolves within their borders into recovery, instead of into extinction.

Our Response: We appreciate the State of Michigan's significant contribution to gray wolf recovery. However, we do not make status determinations on a State-by-State basis. Rather, we determine whether a species (in this case, each of the gray wolf entities evaluated in this rule) meets the Act's definition of an endangered species or of a threatened species because of the five factors throughout all or a significant portion of its range. We interpret the term ''range'' as used in the Act's definitions of ''threatened species'' and ''endangered species'' to refer to the area occupied by the species at the time we make a status determination (79 FR 37583, July 1, 2014). As a result, our analysis of the effects of threats under the five factors to the viability of each of the gray wolf entities evaluated in this rule focuses on its occupied range. Thus, we did not assess the effects of threats to gray wolves in States that are not currently occupied by gray wolves (see Our Response to Comment 37). However, we considered impacts arising from loss of each gray wolf entity's historical range on that entity's viability (see Historical Context of Our Analysis and Determination of Species Status). In other words, we thoroughly assessed the effects of threats and historical range loss on the viability of the gray wolf entities evaluated in this rule based on the best available scientific and commercial data available. In so doing, we have determined that each of the gray wolf entities evaluated is not in danger of extinction, or likely to become so in the foreseeable future, throughout all or a significant portion of its range (see Determination of Species Status). Consequently, we are removing the currently listed *C. lupus* entities from the List. (See Our Response to Comment 42).

Comment 67: Referring only to the gray wolf entity currently on the List as endangered (the 44-State entity), the Michigan Attorney General indicated

that the approach taken in our proposed rule is not in accordance with the Act because it is the same approach taken in our December 28, 2011, rule designating and delisting the western Great Lakes DPS (76 FR 81666), which was vacated by the U.S. Court of Appeals for the D.C. Circuit (*Humane Society,* 865 F.3d at 603). The Michigan Attorney General stated that the approach in the proposed rule splits the 44-State entity into a recovered subgroup (wolves in Wisconsin and Michigan) and an unrecovered subgroup (wolves in several other States in that listed entity) that will become extinct. Quoting the D.C. Circuit opinion, they indicate that the unrecovered subgroup is an ''orphan to the law'' and that our ''failure to address the status of the remnant is fatal.''

Our Response: In this rule, we evaluate the status of the entire 44-State entity (as well as two larger entities that include the entire 44-State entity). The western Great Lakes DPS that was designated and delisted in 2011 (see 76 FR 81666, December 28, 2011) constitutes only a subset of the 44-State entity. Further, our approach in this rule is consistent with the *Humane Society* opinion because we assess the status of the entire 44-State entity, thus there are no subgroups of wolves that could be considered ''orphans to the law.''

Comment 68: The Minnesota Department of Natural Resources stated that a blanket delisting of gray wolves across the United States may not be warranted. They also expressed concern that we may not be identifying and applying delisting criteria appropriately.

Our Response: We appreciate the Department's perspective and the State of Minnesota's significant contribution to gray wolf recovery. While our past status reviews focused on DPSs and taxonomic units that align with our national wolf strategy, we have revised our approach in this rule in recognition of the unique listing history of the gray wolf and court opinions addressing rules in which we designated gray wolf DPSs (see table 1). Therefore, in this rule we do not designate and assess gray wolf DPSs. Rather, we assess the status of the two currently listed gray wolf entities themselves (separately, and combined into a single entity) and the lower 48 United States entity. Further, by ''delisting criteria'' we assume the Department is referring to recovery criteria. We do not base our status determinations on recovery criteria alone (see Our Response to Comment 69). We make our determinations based on a species' (in this case, each of the gray wolf entities assessed in this rule) status throughout all or a significant portion of its range. (See Our Response to Comment 66). Because we have determined that each of the gray wolf entities assessed in this rule is not in danger of extinction, or likely to become so in the foreseeable future, throughout all or a significant portion of its range (see Determination of Species Status), we are removing the currently listed gray wolf entities from the List (see Our Response to Comment 42).

Comment 69: The California Fish and Game Commission and several other commenters opined that much of the recovery analysis in the proposed rule is based on an outdated recovery plan using outdated science. They stated that the recovery criteria on which the rule is based do not factor in the best available science and, therefore, neither does any analysis in the rule that is based on the recovery criteria.

Our Response: Our determination is based on analysis of the best available information regarding the threats to, and viability of, the gray wolf entities evaluated in this rule. Recovery plans and recovery criteria are intended to provide guidance to the Service, States, and other partners on methods of minimizing threats to listed species and on criteria that may be used to determine when recovery is achieved. They are not regulatory documents and cannot substitute for the determinations and promulgation of regulations required under section 4(a)(1) of the Act. We use recovery criteria in concert with the best scientific and commercial data available at the time of the delisting determination, to determine whether threats have been minimized sufficiently and populations have achieved long-term viability to determine whether a species meets the Act's definition of an endangered species or of a threatened species and, therefore, can be reclassified from endangered to threatened or delisted.

Tribal and Tribal Organization Comments

Comment 70: The Nez Perce Tribe expressed their interest in sustainable wolf populations outside of the NRM. Specifically, they commented that the expansion of wolves into areas of former occupation in the Pacific Northwest outside of the NRM would contribute to the persistence of wolves in their homeland as part of a broader metapopulation. The Tribe encouraged us to take no action that threatens, reduces, or hinders the reestablishment and persistence of wolves in all suitable habitat outside the NRM DPS. The Tribe further recommended that the Service support active, precise, and accurate monitoring of wolf pack locations, movements, and demographics to validate that goal.

Our Response: We share the Tribe's interest in sustainable wolf populations, and we expect the wolf metapopulation in the Western United States to continue to expand into unoccupied suitable habitats in the West Coast States and central Rocky Mountains, as envisioned in State wolf conservation and management plans. We support State and Tribal-led efforts to use the best available scientific methods for tracking population trends and distribution, recognizing that in some cases tracking every wolf pack will not be feasible or necessary.

Comment 71: The Makah Tribal Council indicated that the current legal framework in Washington, with Federal protection of wolves in the western two-thirds of Washington State and Tribal/State management responsibility in the eastern one-third of the State, makes overall management of wolves within the State extremely challenging.

Our Response: We thank the Tribal Council for their comment and understand the challenges that have arisen from delimiting the NRM population, which has continued to expand beyond its legally designated boundaries. Although our final rule is based solely on the best available scientific and commercial information with respect to the status of each of the gray wolf entities we evaluated, one consequence of the delisting is that it will resolve the challenge raised by the Tribe.

Comment 72: The Nez Perce Tribe expressed that the sustainability of habitat conditions for wolves, including their prey base, should be of high priority to the Service as it considers delisting. To avoid conflict, the Tribe recommends that the Service work closely with Tribes and States to monitor wild ungulate populations and adjust population objectives for those species as necessary to ensure the robust availability of prey for both wolves and humans.

Our Response: Wolves can exist in nearly any habitat with sufficient food resources and limited human-caused mortality. We agree that a sustainable prey base is necessary for maintaining robust and resilient wolf populations, and we assessed the adequacy of the prey base following delisting in making our delisting determination (see *Habitat and Prey Availability*). We will work closely with the States and Tribes throughout the post-delisting monitoring period to gather and assess data on wolf status, including information on changes to protections for wolves, wolf prey, or wolf habitat.

Comment 73: Several Tribes and multi-Tribal organizations commented that providing Tribes with an opportunity to participate in regular and meaningful consultation is an essential component of a productive Federal-Tribal relationship.

Our Response: In accordance with the President's memorandum of April 29, 1994, Government-to-Government Relations with Native American Tribal Governments (59 FR 22951), E.O. 13175, and the Department of the Interior's manual at 512 DM 2, we readily acknowledge our responsibility to communicate meaningfully with recognized Federal Tribes on a government-to-government basis. In accordance with Secretarial Order 3206 of June 5, 1997 (American Indian Tribal Rights, Federal-Tribal Trust Responsibilities, and the Endangered Species Act), we recognize our responsibilities to work directly with Tribes in developing programs for healthy ecosystems, to acknowledge that tribal lands are not subject to the same controls as Federal public lands, to remain sensitive to Indian culture, and to make information available to Tribes.

We take seriously our government-to-government relationship with Tribes and respect Tribal sovereignty, and we coordinated with the affected Tribes when preparing the March 15, 2019, proposed rule (84 FR 9648). Furthermore, throughout several years of development of earlier related rules and the March 15, 2019, proposed rule, we have endeavored to consult with Native American Tribes and Native American organizations in order to both (1) provide them with a complete understanding of the changes, and (2) understand their concerns with those changes. As we were preparing this rule, we met with the Chippewa Ottawa Resources Authority Board and the Great Lakes Indian Fish and Wildlife Commission's Voigt Inter-Tribal Task Force to discuss the proposal. We also offered to meet individually and discuss the proposal with any Tribe that wanted to do so, and we met with the Fond du Lac Band of Chippewa Indians and the Nez Perce. Additionally, we have fully considered all of the comments on the proposed rule submitted by Tribes and Tribal organizations, and we have attempted to address their concerns and considered any information they provided, incorporating it into the rule where appropriate. We invite Native American Tribes and multi-Tribal organizations to reach out to us after publication of this final rule so that we may engage in discussions aimed at facilitating the transition to State and Tribal management of wolves.

Comment 74: Several commenters stated that the Service must ensure that State wolf management strategies accommodate Tribal interests within reservation boundaries as well as honor the Tribal role and authority in wolf management in the ceded territories. Furthermore, they also indicate that the Federal trust responsibility, as it pertains to wolf management, must be continued after delisting.

Our Response: The Service and the Department of the Interior recognize the unique status of the federally recognized Tribes, their right to self-governance, and their inherent sovereign powers over their members and territory. Therefore, the Department, including the Service and the Bureau of Indian Affairs, will take all appropriate steps to ensure that Tribal authority and sovereignty within reservation boundaries are respected as the States implement their wolf management plans and revise those plans in the future. Furthermore, there may be Tribal activities or interests associated with wolves encompassed within the Tribes' retained rights to hunt, fish, and gather in treaty-ceded territories. The Department of the Interior is available to assist in the exercise of any such rights. If biological assistance is needed, the Service will provide it via our field offices. Upon delisting, all Service management, and protection authority under the Act, of the gray wolf entities will end, although the Service will remain involved in the post-delisting monitoring of gray wolves. Legal assistance will be provided to the Tribes by the Department of the Interior, with the involvement of the Bureau of Indian Affairs as needed. We strongly encourage the States and Tribes to work cooperatively toward post-delisting wolf management.

Comment 75: Two Tribal organizations and several commenters indicated that we did not adequately analyze the effects of increased human-caused mortality on wolf pack social structure, pack dynamics, and livestock depredations. Two commenters noted that wolf populations are self-regulating and are limited by prey availability. Some commenters felt that we needed to reassess regulatory mechanisms in State management plans that allow for ''substantial sport-hunting,'' which could affect wolf persistence and ecosystem health.

Our Response: We acknowledge the importance group living has for a social animal such as the wolf. We are also aware that wolf populations may, under certain conditions, be regulated by density-dependent, intrinsic mechanisms. However, most wolves in the lower 48 United States live in human-dominated landscapes that are not free of human influences. As such, wolf populations are subject to varied levels of anthropogenic influences that can affect certain life-history characteristics.

In general, the loss of a wolf or wolves from a pack, regardless of the cause, alters the social dynamics of the pack. This may, in turn, affect pack cohesion and persistence. However, the effects will vary depending upon the circumstances, including: The individual wolf that was lost, the time of year the loss occurred, the size of the pack, and the size of the wolf population in which the loss occurred. Wolves are resilient and adaptable and have evolved mechanisms to compensate for human-caused, or any other form of, mortality.

The social structure of some packs are affected by increased human-caused mortality, especially on the peripheries of occupied ranges where wolf survival is generally lower than in core areas. However, we conclude that regulatory mechanisms within occupied wolf range are adequate to maintain sufficient wolf population sizes after delisting such that increases in human-caused mortality will have a minimal effect on wolf populations. Refer to the *Human-caused Mortality*—Effects on Wolf Social Structure and Pack Dynamics section of this rule for further information regarding the effects of increased human-caused mortality on pack dynamics. Also, refer to the *Human-caused Mortality* and Post-delisting Monitoring sections of the rule and Our Response to Comment 120 for information related to regulatory mechanisms that will be in place post-delisting and the effects of harvest on wolf populations. See Our Response to Comment 17 for further information about lethal control.

Comment 76: A few commenters stated that Tribal plans that address the management, protection, and/or stewardship of gray wolves should be considered to the same degree as State management plans.

Our Response: We recognize the measures by Tribes to conserve wolves on their lands. We included additional available information on Tribal management in the delisted NRM (Management in the NRM DPS) and on Tribal management post-delisting for other areas (*Tribal Management and Conservation of Wolves*) in this final rule. However, because State wildlife management agencies will assume most management responsibilities when wolves are delisted, we assessed the State management plans in greater

detail. We recognize that the conservation of wolves by Tribes on Tribal lands after delisting may provide additional benefits to the species.

Comment 77: Many Tribes, multi-Tribal organizations, and Tribal members expressed the significant cultural and spiritual relationship between Native Americans and the gray wolf.

Our Response: We appreciate the cultural and spiritual significance of the wolf to many Native Americans. Although we acknowledge the importance of the cultural and spiritual significance of wolves to native people, we cannot consider it as a factor in our determination. Rather, we must evaluate the five statutory factors, consistent with the purpose of the Act to provide for the conservation of endangered species and threatened species, and the ecosystems upon which they depend. The Act defines conservation as the use of all methods and procedures which are necessary to bring any endangered or threatened species to the point at which the measures provided pursuant to the Act are no longer necessary. Under our implementing regulations (50 CFR 424.11), a species should be delisted when the best scientific and commercial data available indicate that it no longer meets the definition of an endangered species or a threatened species under the Act. None of the gray wolf entities we evaluated meets the definition of an endangered species or a threatened species; therefore, we are removing the currently listed entities from the List.

Comment 78: Two commenters stated that the Service should use Tribes' traditional ecological knowledge (TEK) in the delisting decision and future gray wolf management plans. One commenter noted that Service publications describe TEK as ''Native Science'' gained ''over hundreds or thousands of years through direct contact with the environment.'' The commenter also stated that Service publications acknowledge how TEK ''encompasses the world view of indigenous people which includes ecology, spirituality, human and animal relationships, and more.'' The commenter asserts that TEK is the very definition of the best available science.

Our Response: We agree that TEK may constitute the best available science, and it should be used in our decisions as appropriate, which is determined on a case-by-case basis. We sought information from Tribes in preparation of the proposed rule and incorporated any scientific information we received from them.

Public Comments

In this section we do not repeat issues that we've already addressed above. We only address new issues raised that were not raised by peer reviewers, State or Federal agencies, or Tribes.

Recovery and Delisting

Comment 79: Multiple commenters and two Tribal organizations expressed concern that while wolves have rebounded from near-extinction in parts of the northern Rocky Mountains region and Great Lakes area, most of the suitable habitat remains unoccupied and current population levels are lower than historical population levels. They asserted that recovery of wolves where they currently exist is due to Federal protections; thus, it is premature to remove Federal protections because wolves occupy only a small portion of their historical suitable habitat and/or range in the lower 48 United States. Some of these commenters stated that the Act provides for restoration throughout the historical range of wolves, and without protection by the Act, dispersing wolves could be shot or trapped before they are able to establish viable populations in unoccupied habitat. Commenters were also concerned that there is a lack of protection for wolves and promotion for wolf recovery in States not currently occupied by wolves. Similarly, some argued that the Act goes beyond just protecting the minimum number of individuals to prevent extinction.

In contrast, some commenters noted that occupancy of wolves across the entire historical range is not possible, practical, or necessary to support viable wolf populations, and that wolves will return to unoccupied areas if suitable habitat exists.

Our Response: We acknowledge that wolves do not occupy all of the potentially suitable habitat in the lower 48 United States. However, the Act does not describe recovery in terms of the proportion of historical range or potential habitat that must be occupied by a species, nor does it include restoration throughout the entire historical range as a conservation purpose. Thus, the Act does not require us to restore the gray wolf (or any other species) to all of its historical range or any specific percentage of currently suitable habitat. We find that the current level of occupied habitat is sufficient because it has supported recovery of the species. We also expect that wolf populations will continue to grow and expand post-delisting in the West Coast States and central Rocky Mountains under State management (see Post-delisting Management section of this rule and Our Response to Comment 58. We are not, however, relying on such expansion for our determination that wolves in each of the gray wolf entities evaluated in this rule do not meet the definition of a threatened species or an endangered species under the Act.

Comment 80: One commenter indicated that the Service has abandoned its responsibility to recover wolves in the lower 48 United States, which the commenter believed is contrary to its duty to conserve species under section 7(a)(1) of the Act.

Our Response: In this final rule we analyze gray wolves in the lower 48 United States entity, and we conclude that they do not meet the definition of an endangered species or threatened species. The commenter's reliance on section 7(a)(1) of the Act is misplaced. Section 7(a)(1) directs Federal agencies to use their authorities in furtherance of the purpose of the Act by carrying out programs for the conservation of species that are currently listed under the Act. Section 7(a)(1) does not impose a separate requirement to conserve species that no longer warrant listing due to recovery. When a species no longer meets the definition of a threatened species or an endangered species under the Act and is delisted, section 7(a)(1) does not apply to that species. As described in Our Response to Comment 79, the Act does not require us to restore the gray wolf (or any other species) to all of its historical range or any specific percentage of currently suitable habitat before we may conclude that the species is recovered. Rather, that analysis is based on the five statutory factors. Based on the analyses in this final rule, we have concluded that the gray wolf entities currently listed are recovered—that is, they no longer meet the statutory definition of a threatened species or an endangered species. Thus, upon the effective date of this final rule (see **DATES**, above), section 7(a)(1) of the Act will not apply because the two currently listed gray wolf entities will no longer be listed.

Comment 81: One commenter was concerned that shifting management of wolves to States post-delisting is not an adequate policy alternative to the Service's mandate to develop a substantive plan for gray wolf recovery per its responsibility under the Act. The commenter further stated that rather than focusing on the active recovery of the wolf, the Service issued multiple rulemakings to delist wolves.

Our Response: There is no uniform definition for what constitutes recovery and how recovery must be achieved (see Gray Wolf Recovery Plans and Recovery

Implementation). Our recovery strategy for gray wolves in the lower 48 United States consists of recovery of the species in three broad regions (NRM, Southwestern United States, and the East) that capture different subspecies and habitats, and we have, for decades, demonstrated a consistent commitment to this strategy. Recovery plans and recovery criteria are intended to provide guidance to the Service, States, and other partners on methods for eliminating, ameliorating, and minimizing threats to listed species and on criteria that may be used to determine when recovery is achieved. We use recovery criteria, along with an analysis of the five factors to determine whether threats have been abated sufficiently and populations have achieved long-term viability, such that a species no longer meets the definition of endangered or threatened. The multiple rulemakings to delist wolves are a result of the Service's commitment to this recovery strategy. Returning management of gray wolves to the States is appropriate because each of the currently listed gray wolf entities has recovered and does not warrant Federal protections. We have explained elsewhere in this rule why State management is sufficient to ensure the conservation of the gray wolf after delisting. Also see Our Response to Comment 84.

Comment 82: Several commenters stated that we inappropriately relied on wolf populations in Canada to determine that the combined listed entity is not in danger of extinction or likely to become so in the foreseeable future. While the reviewer refers to the combined listed entity, their comment could apply to the analysis of other entities now included in this final rule.

Our Response: We have concluded that each of the entities assessed in this rule—Minnesota, 44-State entity, combined listed entity, and lower 48 United States entity—contains sufficient resiliency, redundancy, and representation to sustain gray wolf populations over time. We provided general information on populations in Canada to acknowledge that they provide additional resiliency, redundancy, and representation to these entities beyond that necessary to sustain populations within the gray wolf entities we evaluated. We have clarified this point in this final rule.

Comment 83: One commenter expressed concern that we were relying too heavily on genetic rescue from Canada to ensure wolf recovery in the United States. The commenter was also concerned that State management might result in significant genetic bottleneck with implications for disease resistance and reproductive output. The commenter noted that disease outbreaks have caused ''sudden and severe'' mortality in Yellowstone wolves three times in the past decade.

Our Response: There is no evidence that gray wolves in the lower 48 United States suffer from low genetic diversity, except where they occur in isolated areas at extremely low population numbers (*e.g.,* Isle Royale). High dispersal rates and long dispersal distances facilitate population connectivity between wolves in the United States and Canada (Fain et al. 2010, p. 1758; Forbes and Boyd 1996, pp. 1088–1089; Treves et al. 2009, p. 200; Jimenez et al. 2017, pp. 7 2012;10), which is not expected to change following delisting. While human-caused mortality is likely to increase in some States following delisting, we have determined that post-delisting management is sufficient to maintain viable metapopulations of the gray wolf (see Determination of Species Status section). The viability of these metapopulations is enhanced, but not dependent upon, their connectivity with Canada, since we expect population numbers to be sufficiently high to maintain genetic diversity without the need for genetic rescue. The fact that wolves have sustained bouts of heightened mortality due to disease in some years is not evidence of a genetic deficiency. While infectious disease is one of the key factors, along with prey abundance and social competition, affecting wolf population dynamics, the ability of wolves in the Greater Yellowstone Ecosystem to rebound from disease outbreaks, in most instances the following year, demonstrates the resilience of individual wolves and packs as well as the limited effects disease has on the dynamics of wolf populations.

Comment 84: Several commenters stated that we should have modified our recovery planning and implementation efforts after revising the listing to a single lower 48 United States listing in 1978. Some expressed that delisting is premature or in violation of the Act because recovery goals have not been identified or met for some or all unoccupied areas of the lower 48 United States, or because the 1992 Eastern Timber Wolf Recovery Plan is inadequate for guiding recovery in the combined listed entity because it is outdated and not the best available science and/or is geographically restricted. Commenters requested we develop, or believe the Act and/or our implementing regulations require us to develop, a single recovery plan for the lower 48 United States, or nationwide, before proceeding with any delisting action. Some commenters provided suggestions regarding the development of such a plan, including specific areas in which wolves could be recovered. Other commenters stated that the Service should base recovery on subspecies or identify distinct population segments across the gray wolf's historical range, and that these should replace or supplement the current recovery zones. The Pacific Northwest, California, central Rockies, and Northeastern United States were mentioned most frequently for additional recovery programs. Still other commenters expressed their opinion that additional recovery efforts across the entire lower 48 United States were unwise and unnecessary.

Our Response: Recovery plans are non-binding documents that are intended to provide guidance to the Service, States, and other partners on methods of minimizing threats to listed species and criteria that may be used to determine when recovery is achieved. However, our determination of the status of each of the gray wolf entities assessed in this rule is based on the status of each entity relative to the Act's definition of an ''endangered species'' or ''threatened species,'' not based on the achievement of specific recovery criteria. Possible future wolf recovery efforts are beyond the scope of this rulemaking because such actions are not necessary as a result of our determination that the gray wolf entities assessed in this rule do not meet the Act's definition of an endangered species or threatened species.

As noted in the March 9, 1978, reclassification rule (43 FR 9607), we replaced the previous subspecies listings with a listing for gray wolves in Minnesota as threatened and gray wolves elsewhere in the lower 48 United States and Mexico as endangered in order to most conveniently handle the gray wolf listing. Our 1978 reclassification rule provided assurances that we would continue to recognize valid biological subspecies for purposes of our research and conservation programs (see 39 FR 1171, January 4, 1974), and we developed gray wolf recovery plans accordingly.

We have satisfied our statutory responsibilities for recovery planning. Section 4(f)(1) of the Act instructs us to develop plans for the conservation and survival of endangered and threatened species. The Act further states that priority should be given to species that are most likely to benefit from such plans. To this end, we prioritized gray wolf recovery planning efforts to focus

on the NRM, the Eastern United States, and the Southwestern United States. We completed a recovery plan for the NRM in 1980, and revised it in 1987. In the East, we completed a recovery plan in 1978, and revised it in 1992. In the Southwest, a recovery plan was completed in 1982, and revised in 2017. We disagree with commenters who suggested that we should have developed a single recovery plan for the lower 48 United States. We are not required to revise our recovery plans and, even if we were, we continue to believe that it is appropriate to focus recovery efforts on these three regions. With the delisting of the currently listed gray wolf entities, we will focus our wolf recovery efforts on recovering gray wolves in the Southwest (the subspecies *C. l. baileyi*) and red wolves (*Canis rufus*) in the Southeast. Also see Our Response to Comment 69.

Comment 85: Commenters offered many reasons why they thought delisting was premature or not warranted. Some commenters indicated that wolf recovery requires, should require, or could be improved by: (1) Establishment of large populations in more, or all, suitable or potentially suitable habitat within the species' historical range; (2) natural connectivity or linkage between populations; (3) protective regulatory mechanisms throughout the species' historical range, or in all or portions of its unoccupied historical range; and/or (4) protection and enhancement of existing population levels. Some claimed that we ignored historical range or historical population numbers when assessing recovery, while others expressed concern about impacts to other species, ecosystems, or the economy if wolves are delisted. Other commenters provided additional reasons why delisting now is appropriate, citing damages from wolves in the form of livestock and dog injuries and fatalities and other indirect damages in reduced farm productivity after interactions with wolves.

Our Response: Under our implementing regulations (50 CFR 424.11), a species should be delisted when the best scientific and commercial data available indicate that it no longer meets the definition of an endangered species or a threatened species under the Act. This final delisting determination is based upon our evaluation of the status of each of the gray wolf entities assessed in this rule in light of the Act's definition of an ''endangered species'' or ''threatened species.'' Thus, we consider potential threats to the species (in this case, the entities assessed in this rule) as outlined in section 4(a)(1) of the Act. When we evaluate the status of a species, we evaluate the impacts of the species' historical range loss on the viability of the species in its current range (see Historical Context of Our Analysis and Determination of Species Status). As described in detail in this rule, each of the gray wolf entities we assessed does not meet the Act's definition of ''endangered species'' or ''threatened species.'' Therefore, delisting the currently listed gray wolf entities is warranted.

Some of the commenters' suggestions are inconsistent with the purposes of the Act. The purpose of the Act is to prevent extinctions and provide for the conservation of endangered and threatened species. The Act defines conservation as the use of all methods and procedures which are necessary to bring any endangered or threatened species to the point at which the measures provided pursuant to the Act are no longer necessary (*i.e.,* recovery). Our conservation efforts have been successful for the gray wolf, and the Act's protections are no longer required for the currently listed gray wolf entities.

Comment 86: One commenter opined that the absence of wolves in areas of high human densities and areas where prey populations are not adequate to maintain viable wolf populations is a positive aspect of historical range loss that is missing from our analysis of the status of the combined listed entity. The commenter claimed that historical range reduction has provided support to the recovery of the combined listed entity by reducing the levels of human-wolf conflict and by concentrating wolf populations in areas where there is an adequate prey base, and that the final rule should recognize this positive factor.

Our Response: We are not aware of any information indicating a positive causal relationship between gray wolf historical range loss (extirpation from most of the species' historical range) and gray wolf recovery. An active eradication program is the sole reason that wolves were extirpated from their historical range in the United States, and the regulation of human-caused wolf mortality is the primary reason wolf numbers have significantly increased and their range has expanded since the 1970s (see *Human-caused Mortality*). The commenter may be referring to factors that potentially influence human attitudes and tolerance of wolves, and the effects of attitudes and tolerance on the illegal killing and overall mortality of wolves. We have revised this final rule to provide additional information and clarity on this topic (see *Human-caused Mortality,* ''The Role of Public Attitudes'').

Comment 87: Some commenters were concerned that human-caused mortality after delisting may halt or reverse gray wolf ''restoration.''

Our Response: As we stated in the *Human-caused Mortality* section of the proposed rule, and this final rule, human-caused mortality is likely to increase post-delisting. This may include increased use of lethal control to mitigate depredations on livestock and the implementation of public harvest to stabilize or reduce wolf population growth rates. Nonetheless, based on past delisting efforts in the Great Lakes area, and as demonstrated by current State management of wolves in the northern Rocky Mountains, we conclude that moderate increases in human-caused mortality after delisting are unlikely to cause dramatic declines in wolf populations across any of the gray wolf entities evaluated. Wolves in California, Colorado, and Washington will continue to remain State-listed and receive protections through State laws and regulations. Although wolves are delisted at the State level in Oregon, they continue to receive protections through the State Plan, its associated regulation, and Oregon's wildlife policy.

Comment 88: A few commenters were concerned that with gray wolf delisting, a lack of Federal protection and funding will mean wolves will not be able to reestablish in Colorado or contribute to ecosystem benefits in Colorado. In addition, they were concerned that post-delisting, human-caused mortality of gray wolves in Wyoming will preclude wolf movements from Wyoming to Colorado, in turn failing to reestablish populations in Colorado. The commenters indicated that there are currently no wolf packs in Colorado, and that dispersal of wolves from Canada to the northern Rocky Mountains region was not quick even following the end of ''routine shooting of wolves.'' They indicated that the presence of wolf populations in Colorado would provide resiliency and redundancy if wolf populations collapse in other States due to habitat loss from human development, disease, prey population declines, or human-caused mortality.

Our Response: In January 2020, a group of six gray wolves was observed traveling together in the northwestern part of Colorado, indicating that gray wolves are in the beginning stages of recolonizing the State. In addition, since publication of the proposed rule, a dispersing individual from northwestern Wyoming was documented in Colorado in July 2019

and has remained in the State using a defined territory since that time. Additional populations of wolves in Colorado would add to the resiliency and redundancy of gray wolves in the lower 48 United States. However, as explained in this final rule, it is not necessary for wolves to occupy all, or most, of their historical range for us to conclude that delisting is appropriate.

Our delisting of the gray wolf does not preclude the continued recolonization in Colorado or the future reestablishment of wolves in any other State. We appreciate the concern that wolf dispersal may be affected by increases in human-caused mortality, which may delay recolonization of vacant, suitable habitats in Colorado. Although recolonization of vacant, suitable habitats can occur relatively quickly, it does still take time, whether or not human-caused mortality is highly regulated. However, the innate behavior of wolves to disperse and locate other dispersing individuals across vast landscapes to, in some cases, fill social openings in existing packs or form new packs in part explains why wolf populations are resilient to moderate increases in human-caused mortality and are highly capable of continuing to recolonize vacant suitable habitats where they exist.

Comment 89: Two commenters opined that wolf recovery cannot be achieved, and delisting is not appropriate, until wolves have returned to Utah. They indicated that much of Utah is historical and current gray wolf habitat, and pointed out that the exclusion of Utah from the recovery area for gray wolves is not explained. One commenter claimed that northern Utah was included in the NRM DPS as an intended ''migratory corridor,'' and asked why it was included as a migratory corridor if it will never function as one.

Our Response: As is stated in this final rule, gray wolves need not occupy all, or most, of their historical range in order for us to conclude that delisting is appropriate. See Our Response to Comment 79 for additional information. The NRM DPS boundary was delineated to encompass an area sufficient for recovery of gray wolves in the northern Rocky Mountains. The northeast portion of Utah was most recently delisted as part of the NRM DPS in 2011. Similar to many other areas in the NRM DPS, that area will continue to provide connectivity to areas outside the NRM DPS, and this rule will not affect the ability of wolves to use both suitable and unsuitable habitats as dispersal routes to recolonize new areas outside the NRM DPS. See 72 FR 6112–6113, for additional information.

Comment 90: One commenter believed that delisting wolves at this time is not appropriate because there are large areas of unoccupied habitat, which, if occupied, could help maintain genetic diversity and resilience, especially as climate change alters habitats and prey availability. The commenter cited Hendricks et al. (2019) as using newer genetic techniques to explain how wolves adapt to different environments. In light of this research, the commenter believed it was premature to declare that self-sustaining populations in the Great Lakes or Northern Rocky Mountains are adequate for long-term survival of the species.

Our Response: As is described in the March 15, 2019, proposed rule and this final rule, we evaluated the resiliency (in addition to other factors) of the Minnesota entity, 44-State entity, combined listed entity, and lower 48 United States entity, and determined that none of these entities meet the Act's definition of an endangered species or threatened species. As part of this evaluation, we assessed climate change, prey availability, and the Hendricks et al. (2019, entire) study. The northern Rocky Mountains wolves remain delisted and continue to expand beyond the NRM DPS boundary. We expect that wolves in the Great Lakes area will remain recovered post-delisting. Also see Our Response to Comment 113, which addresses concerns related to climate change effects on habitat and prey. Our Response to Comment 79 is also relevant to concerns raised by this commenter.

Comment 91: Several commenters asked specifically for the inclusion of more details regarding suitable habitat in unoccupied Rocky Mountain States in our biological report and final rule. They cited Carroll et al. (2006) and other studies that found that Colorado and Utah could support a population of over 1,000 wolves.

Our Response: Due to recent information confirming the presence of a group of six wolves in extreme northwestern Colorado, and their proximity to and potential use of habitats within Utah, we conducted an evaluation of suitable habitat in Colorado and Utah in this rule (see *Habitat and Prey Availability*).

Comment 92: One commenter asked about the basis for our conclusions regarding continued wolf viability in the western Great Lakes and whether we had conducted population viability analyses. They requested that we state our assumptions and clarify definitions of terms. They also asked whether we considered, in our assessment of wolf viability, the likelihood of habitat changes in a significant portion of the range of the combined listed entity. While the reviewer refers to the combined listed entity, their comment could apply to the analysis of other entities now included in this final rule.

Our Response: We did not develop a quantitative model of wolf population dynamics for wolves in the Great Lakes area. Once established, wolf populations are known to be remarkably resilient to human-caused mortality and are not particularly sensitive to changes in habitat as long as sufficient prey populations are maintained (see *Habitat and Prey Availability* section). The basis for our conclusions that wolves are no longer threatened or endangered in the entities evaluated in this rule are summarized in the *Determination of Status Throughout All of Its Range* and *Determination of Status Throughout a Significant Portion of Its Range* sections for each of the entities. In short, wolf populations have remained above recovery targets in the Great Lakes region for almost two decades, and the States have committed to maintaining wolf populations well above these targets for the foreseeable future. (See also Our Response to Comment 20.)

Comment 93: Several commenters were concerned that the removal of Federal protections would inhibit the recovery progress of gray wolves, setting populations on a path toward extinction that would upset ecological systems kept in balance by wolves. Several commented that loss of apex predators substantially diminishes the functions and resiliency of ecosystems. The commenters claimed that ignoring the gray wolf's role in ecosystem function similarly ignores the best available science on this matter. Similarly, they contended that the understanding of wolf ecology and recovery has changed since recovery plans were developed.

Additional commenters asserted that the Act protects ecosystems needed by endangered species and goes beyond just protecting the minimum number of individuals to prevent extinction. Commenters also indicated that the Service should consider ecosystem value when evaluating a significant portion of the range and the indirect effects of wolf population decline post-delisting on ecosystem health and function. Along these lines, commenters stated that wolves ''need to be restored to ecologically functional population sizes sufficient to influence ecosystems'' (citing Belant and Adams 2010, entire). Commenters pointed to numerous studies in the northern Rocky Mountains region and the Great Lakes

area, where wolf populations were determined to influence ungulate and other predator populations in such a way that the dynamics of biological diversity and ecosystem functions produced trophic cascades. Finally, another commenter stated that sufficient research is not available on wolf-ecosystem effects, and that such research needs to be conducted while wolves are still federally protected so the information can be used to inform delisting decisions; when wolves are delisted it would be difficult to obtain funding to support this research.

Our Response: Wolves play a key role in ecosystems, including their potential to contribute to trophic cascades. While some believe wolves should remain listed until these cascading ecological effects are restored throughout ecosystems, this approach is not required by the Act and is not necessary for a determination that a species has recovered (no longer meets the Act's definition of an endangered species or threatened species). The Service is not required to achieve or maintain ''ecological effectiveness'' (*i.e.,* occupancy with densities that maintain critical ecosystem interactions and help ensure against ecosystem degradation) (Soule et al. 2003, p. 1239). That said, the concern that delisting would result in declines or extinction is unfounded.

Service policy calls for an ecosystem approach to carrying out programs for fish and wildlife conservation (National Policy Issuances 95–03 and 96–10; 59 FR 34274, July 1, 1994). The goal of this approach is to contribute to the effective conservation of natural biological diversity through perpetuation of dynamic, healthy ecosystems when carrying out our various mandates and functions. Preserving and recovering endangered and threatened species is one of the more basic aspects of an ecosystem approach to conservation. Successful recovery of an endangered species or threatened species requires that the necessary components of its habitat and ecosystem be conserved, and that diverse partnerships be developed to ensure the long-term protection of those components. Thus the recovery success demonstrated for gray wolves, a keystone or ''highly interactive species'' (as defined by Soule et al. 2003, p. 1239), also is an example of the success of the ecosystem approach.

Many new studies of wolf ecology and its implications for recovery have been published since the species was originally listed. We incorporated the best available scientific and commercial data into the proposed rule and this final rule (see Our Response to Comment 27). We used this information to reach our determination that gray wolves do not meet the Act's definition of an endangered species or threatened species and no longer require Federal protections. Any influence this final rule may have on funding additional research is beyond the scope of this rulemaking process.

Comment 94: Multiple commenters favored the reintroduction of wolves to suitable historical ranges ''for the sake of wolves'' and to repair damages in ecosystems due to a lack of large predators.

Our Response: As discussed in this final rule, we have determined that each of the gray wolf entities evaluated does not meet the Act's definition of an endangered species or threatened species and does not warrant protection under the Act (see Determination of Species Status). Therefore, additional reintroduction efforts by the Service are not planned, as the currently listed gray wolf entities have recovered. Because we have determined that gray wolves should not be federally listed, any future wolf reintroduction into additional areas would be at the discretion of State and Tribal agencies. The interaction of wolves and ecosystems is addressed in Our Response to Comment 93.

Comment 95: One commenter asked that, rather than delist the gray wolf, we reclassify *C. lupus* to accurately reflect the species' historical range and the scope of the Service's obligations under the Act.

Our Response: We interpret this comment as a recommendation to revise the boundaries of the currently listed gray wolf entities. For reasons explained in this rule (see Approach for this Rule), we evaluated the status of each of the currently listed entities separately, combined into a single entity, and the two currently listed entities combined with the NRM DPS (lower 48 United States entity). Because we determined that none of the gray wolf entities evaluated meets the Act's definition of an endangered species or a threatened species, we are removing the currently listed gray wolf entities from the List.

Comment 96: A few commenters expressed concern that delisting gray wolves could harm Mexican wolves, either by increasing human-caused mortality of Mexican wolves dispersing outside the Mexican Wolf Experimental Population Area, or by potentially reducing the likelihood of ''genetic rescue'' via interbreeding with dispersing gray wolves.

Our Response: This final rule has no effect on the separate listing for the Mexican wolf. The Mexican wolf will remain listed as an endangered species and continue to receive the protections of the Act. The Act prohibits activities that ''take'' endangered and threatened species unless a Federal permit allows such ''take'' (16 U.S.C. 1538). Therefore, it will remain illegal under the Act for members of the public to shoot a Mexican wolf, regardless of State laws pertaining to gray wolves or the potential for mistaking a Mexican wolf for a gray wolf or coyote, and members of the public are obligated to ensure that their activities are lawful. We will continue to assess significant causes of mortality as the experimental population expands numerically and geographically within the Mexican Wolf Experimental Population Area. Furthermore, although no information exists that indicates Mexican wolves are currently dispersing into neighboring States, our 10(j) rule specifies that such dispersers will be captured and returned to the Mexican Wolf Experimental Population Area south of I–40 in Arizona and New Mexico, maintained in captivity, or transferred to Mexico (see 50 CFR 17.84(k)). Finally, if genetic rescue is determined to be a necessary tool for the Mexican wolf at some time in the future, appropriate techniques will be used at that time.

Biology, Ecology, Range, Distribution, or Population Trends

Comment 97: One commenter stated that we misrepresented the best available science pertaining to the population and metapopulation structure of wolves. They noted sections of the proposed rule in which we stated that wolves in the West Coast States and the Great Lakes are both part of larger metapopulations of wolves. They noted that dispersal between those two areas has not been documented and dispute their connectivity. Further, they stated that there is no evidence that wolves in the Great Lakes comprise western gray wolves and eastern wolves, due to the aforementioned lack of connectivity between wolves in the northern Rocky Mountains and the Pacific Coast and the Great Lakes.

Our Response: In this final rule we clarify our statements about metapopulations. Our intention in the proposed rule was to convey that wolves in the northern Rocky Mountains and West Coast States were part of a metapopulation that included wolves in western Canada, and that wolves in the Great Lakes area were part of another metapopulation that included wolves in those States as well as in Ontario and Manitoba, Canada. The intent was not to imply that all of those wolves were meaningfully connected as

part of a single metapopulation; we agree that there are no data to show effective dispersal between those two larger areas. We have reviewed and clarified the text where necessary to help ensure the correct interpretation. As for the commenter's statement about western wolves in the Great Lakes area, it is important to note that the term ''western gray wolves'' is used in the taxonomy section to distinguish between western and eastern wolves. There is general agreement that western wolves are *Canis lupus,* unlike the eastern wolves, about which there is significant debate, as explained in the rule. These ''western gray wolves,'' therefore, are widely agreed to be the same taxonomic species as the wolves in the northern Rocky Mountains, but that does not imply, nor do we indicate in the rule, that there is current dispersal or connectivity between the ''western gray wolves'' in the Great Lakes area and wolves in the northern Rocky Mountains or other parts of the Western United States. We acknowledge that the terminology surrounding population structure and taxonomy can be confusing and have tried to clarify where possible.

Taxonomy

Comment 98: Some commenters indicated that the eastern wolf is a species (*C. lycaon*) recognized as threatened in Canada, and that dispersers into the Northeastern United States should be protected.

Our Response: We consider these wolves to be part of the gray wolf entities we assess. As explained in this rule, we have determined that none of the entities we assess meet the Act's definition of a threatened species or an endangered species (see Determination of Species Status) and, therefore, none warrant the protections of the Act. See Our Response to Comment 46 and *How We Address Taxonomic Uncertainties in this Rule.*

Comment 99: We received several comments that questioned how we handled the uncertainty surrounding the taxonomy of the gray wolf and the distribution of subspecies.

Our Response: We have clarified our view of the taxonomy and distribution of wolves to the extent possible given ongoing scientific uncertainty. The Act requires us to conduct our analysis based on the best available science. In the case of canid taxonomy, that science remains unresolved. In light of that uncertainty, we made certain assumptions and provided justification as appropriate. We understand that, absent complete scientific agreement on the subject, there will be disagreement about the correct interpretation of the conflicting data. However, we conclude that our approach satisfies the requirement to use the best available scientific data.

Human-Caused Mortality

Comment 100: One commenter opined that there is a need for greater public involvement in wildlife conservation and management issues, particularly related to predator control.

Our Response: While we appreciate the commenter's perspective, the level of public involvement in wildlife conservation is not a relevant factor in our analysis for this final rule. However, we note that at least three State agencies (Washington Department of Fish and Wildlife, Minnesota Department of Natural Resources, and Wisconsin Department of Natural Resources) have convened citizen advisory groups to engage multiple stakeholders in discussing present and future wolf management in their respective States. Furthermore, State wildlife agencies generally have a citizen commission that sets policy and regulation for the agency through a public process that allows for input from all members of the public interested in a particular topic prior to the commission voting on policy decisions.

Comment 101: Two commenters noted that USDA 2015 found that wolves have minimal impact on the livestock industry compared to other causes. One commenter stated that lethal control is not effective.

Our Response: The report cited by the commenters surveys a random sample of producers nationwide then extrapolates information for each State based on survey results. Although this report demonstrates the minimal effect wolves have on the entire livestock industry at the national level, we conclude that it does not adequately address the local, and sometimes significant, effects that repeated depredations caused by wolves may have on individual livestock producers in occupied wolf range. Because the report lacks actual numbers based on confirmed and probable depredations, the information presented is best used to identify general cattle and calf death loss trends over time at a very large spatial scale. We rely more heavily on the empirical information compiled by State, Federal, and Tribal wildlife management agencies that investigate and classify depredations caused by wolves. Much of this information is provided in annual reports that are available for public dissemination. See Our Response to Comment 17 for information about lethal control.

Comment 102: Several commenters addressed the influence a delisted wolf population might have on acceptance and tolerance of wolves by sportsmen and -women. Most of these commenters indicated that hunters and State wildlife agencies share the burden of a recovered wolf population due to reduced game populations resulting in a reduction of tags allocated for the hunt and reduced revenue. One commenter indicated wolves have had little impact on big game populations. Commenters cited a reference highlighting the need for support from local communities to recover Mexican wolf populations and a reference noting that hunter and trapper tolerance would decline if wolves were to be relisted in Montana.

Our Response: We believe that local support was critical to, and continues to be critical to, the recovery and successful management of the gray wolf. Delisting may slowly improve tolerance for the species among certain stakeholders. However, we acknowledge that other stakeholder groups may experience frustration and reduced tolerance for wolf management as it changes from Federal to State authority. Accordingly, we have updated and revised the section *Human-Caused Mortality*—''The Role of Public Attitudes'' in this rule. Specifically, we addressed the tolerance of wolves by hunters/trappers and overall acceptance of hunting and trapping as a tool used to manage wolf populations. The references provided by the commenters have been incorporated into the discussion as appropriate. Although the commenter referenced a survey that noted tolerance of respondents for wolves would decrease if wolves were relisted in Montana, neither our proposed rule or this final rule considered relisting wolves in Montana.

We conclude that big game populations remain of sufficient size to support both a viable wolf population and recreational opportunities for both consumptive and nonconsumptive users of wildlife. However, we acknowledge that, in some localized areas, wolves may be a significant factor in observed big game population declines, which could result in reduced allocation of hunting licenses and reduced revenue for both local communities and State wildlife agencies. While models indicate that predators can limit prey populations (Eberhardt 1997, entire), the root cause of observed ungulate declines or lack of population growth is often more complex, and involves many more factors, than simply the presence of wolves. For example, habitat conditions on summer ranges and environmental factors (*i.e.,* winter severity) across the

Western United States can have a significant influence on the nutritional condition of adult female elk. This, in turn, affects pregnancy rates, the nutritional condition of calves, and ultimately calf survival and recruitment into the population (Cook et al. 2013, entire; Middleton et al. 2013, entire; Proffitt et al. 2016, entire; Horne et al. 2019b, entire). As a result, the effects of predation on elk may be more pronounced in populations suffering from poor nutrition (Proffitt et al. 2016, pp. 2167–2168).

Even if it is determined that predators have a significant role in the dynamics of ungulate populations, in many cases further research would be necessary to determine which predator is having the most significant effect. Although some studies have documented the ability of wolves to limit the abundance of ungulates (Boertje et al. 1996, entire; Hebblewhite et al. 2002, entire; Hayes et al. 2003, entire), recent studies of elk population dynamics across Idaho (Horne et al. 2019b, p. 1114) and in the Bitterroot Valley of Montana (Eacker et al. 2016, pp. 1354–1357) indicate that, aside from the nutritional condition of adult female elk, mountain lions play a larger role in the dynamics of elk populations than either black bears or wolves. In the Great Lakes area, environmental conditions have a greater influence than predation on white-tailed deer populations, the wolf's primary prey in much of this region. The effects of environmental conditions on white-tailed deer populations in turn play a large role in the dynamics of wolf populations in the region, particularly in regards to wolf abundance and population growth rates (see the ''Great Lakes Area: Prey Availability'' section of this rule). For further information about big game populations in the gray wolf entities evaluated in this rule, refer to the *Habitat and Prey Availability* section of the rule.

Comment 103: One commenter claimed that the livelihoods of people who live in rural areas with wolves are at stake; that wolves are killing their livestock, pets, and working animals; and that, if not provided relief, these residents will fight back against wolves and wolves will die. The commenter believed implementing the proposed rule was best for wolves and people because it returns control to the States.

Our Response: As noted in the *Human-Caused Mortality*—''The Role of Public Attitudes'' section of the rule, research and empirical data indicate that illegal take occurs at a higher rate when gray wolves are federally protected by the Act as compared to periods when wolves are managed under State authority. Surveys also indicate that members of the public are more trusting of their State fish and wildlife agencies than their State or Federal Government (Manfredo et al. 2018, pp. 8, 58–68).

Comment 104: One commenter noted that attitudes towards wolves are largely positive. They stated that wildlife should not be managed based on the public's attitude regarding a species; rather, it should be based on sound science. The commenter also indicated that agencies should work to dispel misperceptions about wolves. Several commenters stated that humans continue to pose a major threat to wolf populations.

Our Response: Regardless of the current level of public tolerance for wolves, we conclude that public support may decrease if the species has recovered, yet remains on the List. The goal of the Act is to recover listed species and then delist them when they no longer require the Act's protections because they do not meet the definition of a threatened species or endangered species. After careful consideration of the best commercial and scientific information, the Service has determined that the gray wolf listed entities are no longer in need of the Act's protections and warrant removal from the List. See the *Human-Caused Mortality*—''The Role of Public Attitudes'' section of the rule for more information about human dimensions and wolves.

The Service agrees that humans continue to pose the most significant threat to wolf populations in the lower 48 United States. We also conclude that adequate regulatory mechanisms that will be, or currently are, implemented by State, Federal, and Tribal wildlife management agencies provide sufficient protections to allow for the continued natural recolonization of wolves where vacant suitable habitat exists and will ensure wolf populations remain viable into the foreseeable future. For further information, see the *Human-caused Mortality* and Post-delisting Management sections of the rule. Also see Our Response to Comment 120.

Comment 105: One commenter was concerned with our analysis of human-caused mortality in the West Coast States. The commenter stated that the proposed rule did not discuss: (a) Lethal management by State and Federal land and wildlife managers; (b) the impact of recreational hunting in the NRM and its effects on wolf dispersal and recolonization of West Coast States; (c) recreational hunting seasons on Tribal lands, such as the unlimited, year-round wolf hunting season on Confederated Tribes of the Colville Reservation lands, which also allow certain hunting and trapping activities outside of Tribal lands; and (d) the loss of wolves at the behest of livestock producers. The commenter asserted that the threat to wolves from human-caused mortality is exacerbated by the lack of nonlethal coexistence practices in key wolf habitats in the West Coast States.

Our Response: With regards to lethal management (including hunting) in the NRM DPS and how that might impact West Coast States wolves, see Our Response to Comment 15. We address the impacts of lethal management of West Coast States, NRM DPS, and Great Lake States wolves in our *Human-caused Mortality* and Post-delisting Management sections. While nonlethal coexistence practices are not in place everywhere, State and Federal agencies and Tribal governments have made significant progress in deploying nonlethal deterrents to address wolf-livestock interactions in the West Coast States. We have contributed approximately $400,000 per year toward a national wolf-livestock grant program (inclusive of Mexican wolf) to incentivize livestock producers to implement nonlethal deterrents. Oregon and Washington have received a portion of these funds for the past several years, while livestock producers or the State have contributed an equal amount of their own funding or in-kind services toward nonlethal coexistence practices.

The commenter is correct that some Tribes immediately outside of the 44-State entity (and, consequently, the combined listed entity) allow wolf harvest. We have updated this final rule to include this information (see *Human-caused Mortality* and Management in the NRM DPS sections); although, we note that the area affected by these regulations is entirely within the NRM DPS, where wolves are already federally delisted.

Habitat and Prey Availability

Comment 106: We received multiple comments related to habitat in the West Coast States and the potential for continued occupancy and expansion of wolves into these States. Specifically, commenters noted that wolves are highly mobile and adaptable and are likely to find suitable habitats amongst the large blocks of State and Federal land in those States. Similarly, commenters noted that land use planning in some States ensures that private lands providing habitat will not be significantly altered. In addition, commenters noted that under State management, wolves are likely to continue to recolonize the West Coast

States, at least partially via dispersal from the northern Rocky Mountains.

Our Response: We recognize the contributions of suitable wolf habitats in the areas described by the commenters. Wolves dispersing from the northern Rocky Mountains are important to the continued expansion of wolf populations in the West Coast States. While continued wolf dispersal from the northern Rocky Mountains into the West Coast States is not required for our findings in this final rule, we affirm that post-delisting management by States will continue to allow wolves to disperse and occupy West Coast States (see Post-delisting Management and Post-delisting Monitoring).

Comment 107: One commenter stated that the Pacific Northwest section 4 analysis in the proposed rule is flawed for the following reasons: (a) The rule's analysis of suitable habitat was based primarily on road density and human population density, and does not properly consider many other vital habitat components (such as forest cover and the availability of federally protected or State-protected lands) and fails to properly assess the threats facing wolf habitat on a broader scale; (b) the rule's failure to consider important connectivity corridors and habitats necessary to foster movement into and allow the recolonization of habitats across the West Coast States by dispersing wolves from the NRM DPS; (c) the rule's failure to consider the vast areas of suitable habitat currently unoccupied by wolves in the West Coast States; and (d) the rule's failure to consider the adequacy or certainty of State regulations and wolf management plans (the commenter specifically notes the lack of State-level listing protections in Oregon).

Our Response: Our biological report, as well as our proposed and final rules, considered vital habitat components, habitat corridors, and threats to habitat. As noted in our final biological report (see *Suitable Habitat* section) and this final rule (see *Habitat and Prey Availability* section), wolves are not habitat specialists and can persist, and travel through, nearly any habitat with sufficient prey, provided that sources of human-caused mortality are regulated. While road density and human population density are considered in some of the wolf habitat models we cite, other covariates include forest cover, livestock density or stocking rates, and land ownership (see *Suitable Habitat* section of the biological report). While there are large areas of unoccupied suitable gray wolf habitat in the lower 48 United States, we focused our analysis of habitat and prey availability on areas currently occupied by wolves. Because new information has emerged since publication of our proposed rule indicating that wolves now occupy a portion of northwest Colorado, we have included an analysis of wolf habitat and prey availability in the central Rocky Mountains in this final rule (see *Habitat and Prey Availability* section).

We also fully considered the adequacy and certainty of State regulations and wolf management plans. Our analysis of post-delisting management considers the likelihood that wolves will persist in the Pacific Northwest following Federal delisting (see ''State Management in the West Coast States''). After delisting, wolves will continue to be State-listed in Washington and California until those States determine that wolves are recovered. Although wolves will not be State-listed in Oregon following Federal delisting, the Oregon Department of Fish and Wildlife is required by State regulations to follow the Oregon Wolf Conservation and Management Plan. That plan includes program direction, objectives, and strategies to manage gray wolves in Oregon and defines the gray wolf's special status game mammal designation (Oregon Administrative Rule 635–110). Thus, there will continue to be substantial regulatory protections for gray wolves in the Pacific Northwest following Federal delisting.

Comment 108: One commenter asked that we provide the basis for several statements regarding changes to prey availability or habitat in the western Great Lakes. Specifically, they asked for the basis of our conclusions regarding the effects of ungulate harvest, management of ungulate habitat, or ungulate diseases on wolf prey availability.

On the topic of ungulate diseases, several commenters proposed that the spread of chronic wasting disease (CWD) can be controlled or otherwise inhibited by wolves. They indicated that the lack of large predators, including wolves, played a role in the current unnatural distribution and prevalence of CWD, and that wolves prey upon vulnerable animals, such as the weak, sick, young, or old; killing sick animals reduces the transmission of diseases, including CWD. Commenters further opined that CWD may never have become established if wolves were present to reduce or eliminate its spread via selective predation on sick animals.

Our Response: We have updated our analysis in the *Habitat and Prey Availability* section of this rule to clarify the basis for our conclusions regarding the effects of ungulate harvest, management of ungulate habitat, and ungulate diseases on the viability of wolves. While predation can reduce the prevalence of infection in prey in some circumstances (see Hobbs 2006, p. 8; Wild et al. 2011, pp. 82–88; Tanner et al. 2019, pp. 5–7), in areas of high CWD disease prevalence this may not always be true (see Miller et al. 2008, entire). We decline to speculate whether or not CWD would have become established if wolves were present to reduce or eliminate its spread, as such speculation is immaterial to our decision.

Comment 109: One commenter stated that the U.S. Forest Service could help the gray wolf by fully implementing the forest management goals in existing National Forest Management Plans. They stated that creation of early seral habitats, which are generally favored by large ungulate species, would benefit wolves. They requested that we recognize that not only do the National Forests provide large blocks of contiguous habitat that are unlikely to be converted to other uses, but that they also provide management opportunities to increase prey availability through forest management.

Our Response: Some National Forests provide large blocks of contiguous habitat for the gray wolf (see *Management on Federal Lands* sections), although wolves are not limited to these areas. While it is true that some forest management practices can increase prey availability, wolves can also persist in areas without significant active forest management. Finally, we did not find habitat or prey availability to be a limiting factor in our analysis of threat factors in this rule (see *Habitat and Prey Availability* section).

Comment 110: One commenter asked that we not specify road densities in delisting decisions, as they may limit management flexibility on National Forests. They pointed to research (*e.g.,* Wydeven et al. 2001) that appears to indicate wolves can persist in some areas with relatively high road densities. The commenter is concerned that lower road densities will limit access for forest management and the creation of early seral habitats for ungulates.

Our Response: In this final rule, we refer to road densities reported in the scientific literature because they have been found to be correlated with wolf mortality in some areas. We are not aware of any scientific basis for the concern that lower road densities would substantially reduce prey availability for wolves to the extent that it would impact population viability.

Comment 111: One commenter questioned why we believed wolves would continue to expand in California

with the removal of Federal protections under the Act.

Our Response: Wolves in California are classified as endangered under the California Endangered Species Act, which prohibits take (defined as hunt, pursue, catch, capture, kill, or attempts to hunt, pursue, catch, capture, or kill) of listed wildlife species (California Fish and Game Codes sections 86 and 2080). This will not change with Federal delisting. As we discuss in the *Habitat and Prey Availability* section, the available scientific literature shows significant amounts of suitable unoccupied wolf habitat in California. Given their dispersal abilities (Jimenez et al. 2017, entire), and continued State regulatory protections in Oregon and California (see Our Response to Comment 16), we expect wolves to continue to disperse into California from Oregon and to spread outward from the wolf pack currently located in California. Additionally, as the number of wolves and wolf packs increase in western Oregon, this increase will provide an additional supply of dispersers to recolonize California.

Disease and Parasites

Comment 112: One commenter stated that the Service addressed disease only as a threat to wolves in the Great Lakes area and did not address this issue for west coast wolves. The commenter also indicated that diseases are known factors for wolf population crashes in small and isolated populations, similar to those in the West Coast States. Another commenter sought clarification as to which States collect biological samples for disease monitoring, how disease monitoring will occur in the future, and if States are able to sufficiently monitor disease as wolf expansion continues.

Our Response: The analysis in the *Disease and Parasites* section of this final rule applies to the gray wolf throughout its range in the lower 48 United States and is not limited to wolves in the Great Lakes area. Further, wolves in the West Coast States are an extension of wolves from the NRM and western Canada and are actively recolonizing Washington, Oregon, California, and Colorado. Thus, they are not considered ''small and isolated'' as indicated by the first commenter. Similarly, our discussion of disease and parasite monitoring clearly indicates that all States that currently have wolves monitor for disease. Through the various State wolf management plans that are in place, and will be in place post-delisting, we conclude that States are capable of adequately monitoring disease and parasites into the future.

Effects of Climate Change

Comment 113: Three commenters disagreed with our assessment of climate change effects to wolves and wolf prey. One commenter was concerned about climate change-related declines in moose populations (citing Mech et al. 2018 and Nadeau et al. 2017), changes to ungulate susceptibility to chronic wasting disease (CWD), and loss of ungulate habitat to uncharacteristic fire in the West, which raised a question about the resilience of wolves in the future. The commenter felt a broader distribution of wolves is needed to address the potential for local population decreases or extirpations as a result of these concerns. Another commenter noted that, without snowpack, large hoofed animals will be able to out-run wolves and implied that ungulate prey may become less accessible to wolves. Similarly, this commenter was concerned about the loss of ice bridges in Isle Royale National Park, leading to isolation and population declines of wolves on the island. A third commenter stated that the role of climate change on wolf recovery is unknown and recommended that the impacts of climate change should be researched before delisting occurs.

Our Response: In this final rule, we find that each of the gray wolf listed entities evaluated is recovered and warrants delisting. Through this process, we evaluated factors potentially threatening the gray wolf in the lower 48 United States, including climate change (see *Effects of Climate Change*). We determined that climate change is not causing negative effects to the viability of the gray wolf populations in each of the entities evaluated and that it is not likely to do so in the foreseeable future. These comments do not alter the substance of our analysis, for the reasons explained below.

As discussed under *Effects of Climate Change,* wolves are highly adaptable, habitat and prey generalists. Similarly, prey species including ungulates also have reasonable adaptive capacity to shift habitats in response to changing conditions or potentially persist in place. Mech et al. (2018, pp. 45–46) and Nadeau et al. (2017, pp. 107–109) speculate that climate change and its combined potential habitat-related conditions, including potential for heat stress and rates of spread of disease and parasites, may be limiting factors for moose populations at the southern extents of their range in Minnesota and the Western United States. While climate change may be detrimental to moose populations in the Midwest, it may benefit white-tailed deer populations (Weiskopf et al. 2019, pp. 775–776), the wolf's primary prey in the region. Because historical evidence indicates gray wolves and their prey survived in hotter, drier environments, we expect wolves could easily adapt to the warmer and drier conditions that are predicted with climate change, including any northward expansion of diseases, parasites, or reduction in species currently at or near the southern extent of their range.

With regard to decreased snow cover in winter and the concern that prey would have an advantage, we note that such changes in snow cover could also improve over-winter survival of prey. Increases in overall ungulate populations would thereby provide more prey for wolves. Although climate change may negatively affect moose in parts of its range, in many areas, moose are secondary or tertiary prey items for wolves behind elk and deer in the West and white-tailed deer in much of the Great Lakes area. Therefore, the effects of declining moose populations on overall prey availability within the entities evaluated is expected to be minimal.

Because the wolves on Isle Royale do not meaningfully contribute to the viability of the gray wolf entities evaluated in this rule, the continued occurrence or loss of ice bridges does not warrant further analysis.

Comment 114: We received a number of comments that stated climate change and its effects should be analyzed more thoroughly as a threat to wolves, and that climate change poses serious challenges for many ecosystems and species. These commenters provided citations that document the current global extinction crisis, relate that crisis to climate change, report on the ecosystem effects of losing top predators or other megafauna, and discuss how wolves may help to buffer climate impacts.

Our Response: While we do not dispute the findings in the sources cited by the commenter, they are outside the scope of our analysis in this rule. Our analysis is limited to the specific threats affecting the gray wolf in the lower 48 United States. Literature addressing global conservation challenges can provide important context, but are not relevant to our analysis unless they relate to threats faced by the gray wolf in the lower 48 United States. Additionally, in assessing the impacts of climate change and other factors on wolves, we are not required to evaluate any effects the loss of wolves may have on other species, because those effects, even if significant, do not affect the

status of the gray wolf entities addressed in this rule.

Comment 115: Several commenters requested a more thorough analysis of climate change effects on wolf habitat. They noted that patterns of drought and wildfire, changes in snowpack, and suitability for different vegetation types, including certain forest types, are likely to change. One commenter cited Gonzalez et al. (2018), which indicates climate change effects may be more pronounced in national parks, while another cited the U.S. Global Climate Change Research Program's Fourth National Assessment (2018), which includes projections of habitat effects in regions across the country.

Our Response: The cited papers and other research indicate there are likely to be habitat-level effects within the range of the gray wolf in the lower 48 United States due to climate change, including changes in precipitation, forest composition, and other factors. Depending on the region, there are also likely to be shifts in the specific composition, but not availability of, the ungulate prey base as climate change effects may be beneficial for some ungulate species and detrimental for others (Weiskopf et al. 2019). Wolves, however, are highly adaptable and able to exploit available resources, making it unlikely that such shifts will become limiting. As stated in our discussion of life history and biology, wolf population dynamics are strongly driven by the availability of prey and protection from persecution, not by specific habitat or vegetation types. While there are many habitat changes that may have local or short-term effects, including wildfires, or forest tree composition, the best available information about wolf biology indicates that these changes are not likely to significantly impact wolf population dynamics.

Genetics

Comment 116: Several commenters recommended we address effective population size, citing Frankham et al. (2014) and the ''50/500'' or ''100/1000'' rules as targets for minimum effective population sizes to ensure viability in both the short term and in perpetuity. They noted that effective population size has not been measured for the entire combined listed entity and that we provided no calculated ratio of census size to effective population size, and stated that management in Michigan and other States may allow effective population sizes to drop below sustainable levels.

Our Response: In response to these comments, we added a section to evaluate more thoroughly the available data addressing wolf population genetics (*Genetic Diversity and Inbreeding*). This section includes relevant literature on available estimates of effective population size and why or how it relates to other genetic issues for wolves. Effective population size, as it relates to viability, is generally described as being important in the short term to avoid the effects of inbreeding, and in the long term to allow for evolutionary processes and adaptive capacity. As discussed in the *Genetic Diversity and Inbreeding* section, the available data do not indicate that inbreeding or associated effects are likely to pose a significant threat to the gray wolf in the lower 48 United States. In the long term, we expect that connectivity among States in the Great Lakes area and between those States and Canada will continue to support a large and genetically diverse population, as will connectivity among the NRM States and West Coast States and between those States and Canada. Moreover, we also recognize that a species' adaptive capacity is derived not only from genetic diversity, but also from phenotypic plasticity and dispersal ability (Nicotra et al. 2015, entire; Beever et al. 2016, entire). These factors are not included in general thresholds such as that provided by Frankham et al. (2014). Considering the life-history characteristics of the wolf, including high dispersal capability and adaptability, along with the factors discussed in the *Genetic Diversity and Inbreeding* section, it is unlikely that the wolf will be limited by adaptive capacity in the foreseeable future.

Comment 117: Several commenters recommended that we provide a more explicit assessment of wolf population genetics and a discussion of potential issues or concerns related to genetic diversity, including inbreeding or reductions in genetic diversity.

Our Response: In response to these comments, we added the section *Genetic Diversity and Inbreeding,* which evaluates potential genetic issues in wolves, both generally and within the gray wolf in the lower 48 United States specifically. We acknowledge the importance of considering genetic issues more explicitly as they relate to the current status of wolves and to potential changes upon delisting. As stated in that section, studies of genetic diversity have generally found it to be relatively high within the lower 48 United States (with the exception of the wolves on Isle Royale). Given our understanding of population dynamics, dispersal, and connectivity within and outside of the gray wolf entities analyzed, we do not expect genetic issues to significantly impact the viability of those entities.

Additional Threats

Comment 118: One commenter recommended that we consider domestic and international trade as a potential threat, including, for example, export of wolf skins.

Our Response: Regardless of demand for wolf skins, specimens collected for domestic or international trade likely occur through intentional means such as trapping or hunting. Because we already addressed intentional means of mortality in our analysis of human-caused mortality, we find that this is not a separate or different threat that requires additional analysis.

Comment 119: One commenter stated that agricultural development is a source of historical ''near extirpation'' of wolves. The commenter indicated that this threat still exists today, as there is more agricultural land present than historically.

Our Response: In our March 15, 2019, proposed rule and this final rule, we acknowledge that large portions of the gray wolf's historical range are no longer suitable habitat to support wolves. However, we determined that sufficient suitable habitat exists to continue to support wolves into the future (see ''Habitat and Prey Availability Summary'' in this final rule).

Post-Delisting Management

Comment 120: Several commenters stated that there is a mentality among some segments of the public to kill every wolf on the landscape, and without the protections of the Act, this mentality could result in the increased intentional killing of wolves (either through legal or illegal actions) that could once again threaten the continued existence of wolves. One commenter believed wildlife agencies were complicit in this mentality and assist the public by providing information to further reduce wolf populations. Many commenters were critical of the adequacy of regulatory mechanisms at the State level to maintain a recovered wolf population. One commenter indicated that management plans are not legally binding documents so there is no guarantee States will manage wolves above recovery levels, and others questioned the State management agencies' commitment or ability to do so. Several commenters took issue with the adequacy of State monitoring programs to accurately document wolf populations post-delisting. Five Tribal organizations and numerous commenters noted the declining trend in wolf numbers and the total number

of wolves harvested post-delisting in the NRM DPS. These commenters argue that the same will occur elsewhere if wolves are delisted. One commenter was concerned about State funding for wolf programs and its effect on State monitoring programs to ensure a viable wolf population is maintained. Numerous commenters were concerned about the potential for increased mortality under State management and the effect it may have on recolonization of unoccupied, suitable habitat.

Several other commenters stated that wolves will continue to disperse after the protections of the Act have been removed, as has been observed in the NRM wolf population after delisting. Commenters noted that hunting has had little impact on wolf populations and that wolf populations continue to grow in number and expand geographically. Commenters stated that State management plans and regulatory mechanisms have been more than adequate to maintain wolf populations well above recovery criteria and that the public should be commended for the work they have done to complete and implement management plans.

Our Response: While we acknowledge that some people have negative attitudes towards wolves and may illegally kill wolves as a result, we disagree with the assertion that State wildlife agencies assist members of the public in any way to carry out these actions. States and Tribes have rules and regulations governing the take of wolves and all wildlife, with professional staff available to monitor wildlife populations and enforce wildlife laws under their jurisdiction. We acknowledge that human-caused mortality will likely increase post-delisting. Based on knowledge and experience in areas that are already delisted, we expect wolf numbers to initially decline, followed by a period of stabilization with slight fluctuations around an equilibrium in subsequent years as State and Tribal managers begin to adaptively manage for sustainable wolf populations. We conclude that regulatory mechanisms that will guide wolf management post-delisting are adequate to ensure the long-term, recovered status of wolves into the foreseeable future and will provide opportunities for the continued recolonization of vacant suitable habitats in the West Coast States and the central Rocky Mountains (refer to the Post-delisting Management section of this rule for detailed information about State plans). For further information, see Our Response to Comments 14, 16, 19, and 52 and the *Human-caused Mortality* section of the rule.

Human-caused mortality is the primary mortality factor for wolves outside of large, protected areas and, if left unregulated, can be a significant threat to wolf populations. However, we determined that regulatory mechanisms currently in place provide sufficient protections to ensure sustainable and recovered wolf populations will persist into the foreseeable future. We conclude that it is reasonable to rely on State statutes, regulations, and wolf management plans to understand how wolves will be managed after delisting. Wolf management plans from the Great Lakes States of Michigan, Minnesota, and Wisconsin indicate that their primary goal is to ensure the long-term survival of wolves while concurrently minimizing wolf-related conflicts. State statutes and regulations are developed and adopted to assist each individual State in achieving this goal. Based on our review of available information, we expect that States will adaptively manage wolves to ensure the continued viability and recovered status of the species, which has already been demonstrated by wildlife managers in the Great Lake States during past delisting efforts (see Our Response to Comment 130 and Post-delisting Management). In addition, we may use the Act's listing provisions, including emergency listing under sections 4(b)(7) and 4(g)(2) of the Act, if appropriate, to address any future threats to the viability and sustainability of the wolf population.

The West Coast States of Oregon, Washington, and California have adopted wolf-management plans intended to provide for the continued recolonization and conservation of wolves while also working to minimize wolf-related conflicts. Wolves inhabiting the eastern one-third of both Oregon and Washington were federally delisted in 2011 (see 76 FR 25590; May 5, 2011) and have been managed under State authority since that time. As a result, lethal control has been used on occasion to resolve repeated conflicts with livestock in the delisted portions of each State. Despite the delisting and subsequent use of lethal control, wolves have continued to increase in number and recolonize vacant, suitable habitats within each State. Wolves in California and Washington are classified as endangered at the State level and, regardless of Federal status, are likely to remain so until recovery objectives outlined in their respective management plans are achieved and statutory and regulatory changes are made to reclassify wolves in each State. Washington recently initiated work to develop a post-recovery wolf management plan that would guide the long-term conservation and management of the species in the State. Wolves in Oregon are classified as a ''special status game mammal'' under Oregon Revised Statutes 496.004(9); however, regulated take is not anticipated to be a management option for some years (see Our Response to Comment 107 for further information about Oregon). It is expected that wolf populations in these States will continue to increase as they recolonize vacant, suitable habitat within the region.

As stated previously in this rule, we fully expect human-caused mortality to increase post-delisting in Michigan, Minnesota, and Wisconsin, as these States attempt to stabilize or reduce wolf population growth, but we do not anticipate those declines will be significant enough to threaten the recovered status of wolves. The NRM States of Idaho and Montana provide an example of how wolf populations might respond to increased human-caused mortality post-delisting. In Idaho, the wolf population peaked in 2009 at 870 animals and under State management, including public harvest in all but one year since 2009, the population declined slightly and stabilized between 659 and 786 wolves during 2010–2015 (see table 3). Likewise, Montana wolves have been managed under State authority in all but one year since 2009. Population estimates acquired by patch occupancy modeling (Rich et al. 2013, entire) indicate wolf numbers reached a high of 1,088 wolves in 2013, but have since (from 2016–2018) stabilized between 800 and 850 animals (Inman et al. 2019, p. 7). Wolf populations in the Great Lakes States will likely follow a similar trend of an initial decline followed by long-term stabilization that will fluctuate slightly around an equilibrium as managers gain more experience in adaptively managing wolves. This equilibrium is expected to be well above minimum recovery criteria. The Service will evaluate potential threats and wolf population responses to delisting and subsequent increases in human-caused mortality for 5 years post-delisting. It would not be in the best interest of the Great Lake States to severely reduce wolf populations or manage wolves down to minimum management levels, because doing so would severely limit State flexibility to address wolf conflict issues, limit wolf harvest opportunities, and increase the risk of relisting.

Another factor we considered regarding likely long-term wolf population levels is the practical

challenge of reducing wolf populations down to levels that may threaten their viability and maintaining such reductions long term through legal, public harvest alone (*e.g.,* hunting and trapping). These challenges include: Wolves' reproductive capacity, which will require increased levels of mortality to maintain populations well below carrying capacity; wolf dispersal capability, which allows for rapid recolonization of vacant, suitable habitats and the ability to locate social openings in existing packs; the likelihood that wolves will become more challenging to harvest as their numbers are reduced and as they become more wary of humans; and the likelihood that hunter and trapper interest and dedication will diminish as the wolf population is reduced, impacts are less pronounced, and success rates decline. It was primarily due to the unregulated use of poisons that wolf populations were extirpated in the lower 48 United States outside of Minnesota. At present, poisons are either not used at all, or their use is highly regulated and has not posed a significant threat to wolf populations in the United States in recent decades.

For information related to State monitoring programs and the methodology used to accurately document wolf populations post-delisting see Our Response to Comment 14.

Wolf conservation and management programs can be costly, which, as discussed earlier, is a primary reason many States are at the forefront in developing alternative wolf monitoring methods and continue to gather information and explore techniques to minimize risk associated with wolf conflicts. Because cost effective wolf monitoring and management requires adequate funding, each State wolf management plan discusses current and future funding sources and needs. At present, States within occupied wolf range generally use a combination of State and Federal funds and/or grants to support wolf programs.

Although increased human-caused mortality may result in an overall decrease in the number of dispersers on an annual basis, as well as a reduction in dispersal distance as dispersers locate vacant territories or fill social openings nearer to their natal pack, dispersal is innate to the biology of the wolf and both short- and long-distance dispersal events will continue to occur. These movements will make it possible for wolves to recolonize areas of vacant, suitable habitat outside of currently occupied range, especially in the central Rocky Mountains and the West Coast States where resident packs in California, Oregon, and Washington contribute annually to the number of dispersing wolves on the landscape available to fill social openings in existing packs or to recolonize suitable habitat both within and outside of each State. By contrast, wolves have already recolonized most of the available suitable habitat in the Great Lake States, and any wolves that attempt to recolonize areas outside of the currently occupied range are not likely to persist long term due to the increased probability of conflict in more agriculturally oriented and human-dominated landscapes (see Mech et al. 2019, entire). For further information on this topic, see the *Human-caused Mortality* section of the rule and Our Response to Comment 15.

Comment 121: Two commenters expressed concerns about Federal compensation programs and the Federal Government's role in compensation programs post-delisting. One spoke specifically about the Livestock Indemnity Program and how funds from this program may be unavailable to livestock producers who experience losses to wolves in States that do not currently have compensation programs already in place. This commenter believes that, without compensation programs, social tolerance for wolves will decrease, and wolves will be at greater risk of increased human-caused mortality. The other commenter stated that the Federal Government did not fulfill its responsibility to provide compensation for wolf-caused livestock losses and instead relied on States to develop compensation programs and distribute compensation funds. This commenter would like to see a Federal program that provides funds to States to assist with compensation to livestock producers who experience losses to wolves.

Our Response: We agree that compensation programs alleviate some of the financial burdens experienced by livestock producers resulting from wolf depredations on livestock or pets and may indirectly increase tolerance among members of this stakeholder group for having wolves on the landscape. However, the Act does not allow us to make listing determinations based on whether State, Federal, or private compensation programs are adequate or will continue to be available to producers post-delisting. At present, all States within occupied wolf range, except California and Colorado, currently have some form of State compensation to reimburse producers for livestock lost to wolves. Although the usefulness of the Livestock Indemnity Program may decline post-delisting, States and Tribes will continue to have the opportunity to apply for Federal grants (Wolf-Livestock Demonstration Funds) that can be used to help offset some of the costs associated with the implementation of nonlethal mitigation techniques and State compensation programs.

Comment 122: Several commenters expressed concern that State management would not be adequate to recover and maintain viability of wolves post delisting. Specifically, they contend that:

- California's plan is relatively new;
- Oregon's plan has become less protective;
- wolves are not State-listed in Oregon;
- Washington's plan is under legislative pressure and the State has allowed lethal control;
- the Great Lakes States previously allowed and will again allow recreational hunting and trapping;
- penalties for illegally killing wolves are inadequate;
- some States will manage wolves only to the point that they would not again require Federal listing;
- many States lack wolf management plans or protections or will manage to prevent establishment of wolves; and
- dispersal would be limited by hunting.

Our Response: We conclude otherwise, as reflected in the Post-delisting Management and Management in the NRM DPS sections of this rule. These State management plans contain objectives to conserve and/or recover gray wolves. To ensure healthy populations are maintained, States will monitor population abundance and trends, habitat and prey availability, and impacts of disease, and they will take actions as needed to maintain populations. Overall, State management plans demonstrate State commitment to wolf conservation, thus providing a high level of assurance that healthy wolf populations will persist. We do not have authority to require specific State management measures. Rather, our role is to ensure that States implement management and protective measures that effectively conserve the wolves in their States, such that the species will not require Federal relisting.

Comment 123: One commenter questioned the basis and rationale for the conclusion in the proposed rule that wolf populations in Wisconsin and Michigan have exceeded 200 animals for about 20 years.

Our Response: The statement the commenter references is included in our discussion of *Recovery Progress* toward

meeting the recovery criteria from the revised recovery plan (USFWS 1992, pp. 24–26). The second recovery criterion in the recovery plan states that at least one viable wolf population should be reestablished within the historical range of the eastern timber wolf outside of Minnesota and Isle Royale, Michigan (USFWS 1992, pp. 24–26). Per the recovery plan, if that population is isolated, it should consist of at least 200 wolves for at least 5 years to be considered viable. The populations in Wisconsin and Michigan (although not isolated) have been above 200 for about 20 years (since 1998–1999 in Wisconsin, and since 1999–2000 in Michigan); therefore, they have met the recovery criteria for an isolated population.

Comment 124: One commenter felt that wolves should remain federally protected on all Federal lands in the western Great Lakes. Other commenters indicated we failed to analyze forest management plans in Michigan, Minnesota, and Wisconsin and how those plans affect wolves through livestock grazing, maintenance of prey populations, and regulation of hunting and trapping activities. One of these commenters further opined that we should have analyzed plans of every other Federal agency in the Midwest, and must evaluate every rule and regulation that may affect wolves and their habitat.

Our Response: Different Federal land management agencies have varied missions that guide the use of their lands, and some Federal lands play an essential role in wolf recovery. However, maintaining Federal protections for wolves on Federal lands is not necessary for the continued viability of wolves in the Great Lakes region. Unregulated take, inclusive of targeted poisoning across all land ownerships, was the primary factor leading to the near extirpation of wolves across the lower 48 United States. In addition to protections afforded by the Act, changes in State and Federal rules and regulations that provided regulatory mechanisms that prevented or limited take and prosecuted illegal take of wolves have allowed for the conservation and recovery of the gray wolf in the lower 48 United States to a level that warrants removal of both gray wolf listed entities from the Federal List of Endangered and Threatened Wildlife. For further information, see *Management on Federal Lands* section of this rule.

Comment 125: Several commenters noted that killing predators for sport or trophy hunts is morally and ethically wrong, and will threaten the viability of wolf populations post-delisting. One commenter objected to the use of hounds to legally harvest a wolf in Wisconsin when wolves were delisted.

Our Response: We recognize that many find some or all forms of human-caused wolf mortality ethically and morally objectionable. We have encouraged hunting as a long-term strategy to conserve wolf populations because it is a valuable, efficient, and cost-effective tool to help manage many wildlife populations (Bangs et al. 2009, p. 113). However, the methods that may be used to legally harvest wolves after delisting are not relevant to our analysis. The Act requires that we make listing determinations based on whether the species meets the definition of a threatened species or an endangered species because of the five statutory factors. The manner in which individuals may be harvested post-delisting is not a factor we consider, unless it would affect the viability of the species. How wolves may be legally harvested post-delisting will be subject to State authority and regulation. Based on the available information, we do not find any persuasive information to indicate that the manner in which wolves may be harvested will affect their viability in the lower 48 United States.

Comment 126: One commenter indicated that, without protection provided by the Act, wolves will have a more difficult time establishing a population in California. The commenter stated that the Service failed to consider threats to gray wolves from ''other manmade factors,'' specifically illegal killing and poaching.

Our Response: Our March 15, 2019, proposed rule and this final rule address human-caused mortality, as do multiple responses to comments from peer reviewers and State agencies (see *Human-Caused Mortality* section of this final rule and Our Responses to Comments 15, 18, and 52. Our analysis of threats sufficiently considers ''other manmade factors,'' including illegal killing and poaching.

Comment 127: One commenter stated that, while the Wisconsin population management goal of 350 wolves is above the goal required for Federal delisting, that goal was generally considered ''unscientific and outdated'' by Wisconsin wildlife professionals. The commenter stated that a goal of 650 was considered ''more reasonable'' and ''realistic,'' and relatively ''better'' than the alternatives presented. The commenter further opined that the previous wolf management goal of 350 should be reevaluated, as it is no longer compatible with the scientific understanding of wolf biological carrying capacity or human attitudes and tolerance of wolves in the State.

Our Response: After delisting, the States will be responsible for setting specific wolf management goals. Thus, Wisconsin may decide to manage for a higher number of wolves following delisting. For the purposes of this delisting determination, we evaluate whether wolves are endangered or likely to become endangered in the foreseeable future throughout all or a significant portion of their range. In that context, we considered all aspects of the Wisconsin Wolf Management Plan, including that they would manage for a minimum of 350 wolves in the State, and whether that, in combination with management in the rest of the entity evaluated, would maintain wolves such that they are not endangered or likely to become endangered in the foreseeable future throughout all or a significant portion of their range.

Comment 128: Several commenters expressed concern that the States would implement a public harvest or recreational hunting after wolves are federally delisted. Others commented that they support a public harvest or recreational hunting.

Our Response: Unregulated killing (specifically, killing through the use of poisons and government bounties) was the primary threat to the gray wolf in the lower 48 United States historically. Current rules and regulations as well as State management plans that will be implemented after delisting provide protection from unregulated killing. For the purposes of this rule, we are not required to decide whether a regulated harvest is an appropriate management tool. Instead, we evaluate whether the use of that management tool may reduce the number of wolves in the gray wolf entities to the extent that they would meet the definition of a threatened species or an endangered species under the Act. As has been observed in the NRM States of Idaho, Montana, and Wyoming, we conclude that regulated wolf harvest can be carried out in a manner that would not threaten their recovered status.

Comment 129: Several commenters expressed distrust for State wolf protection, based on past State programs aimed at wolf eradication. Another commenter noted that delisting is based in part on the adequacy of State management plans, without taking into consideration the fact that aspects of these plans have been and will continue to be altered by State legislation. The commenter expressed concern that politically based management is a serious threat to wolves and cannot be underestimated.

Our Response: We acknowledge the past involvement of State and Federal Government agencies in intensive, and largely successful, programs to eradicate wolves. Based on existing State laws and State management plans, as well as the track record of States where wolves have been federally delisted, we conclude that it is appropriate to rely on the States to provide sufficient protection to wolves. We will monitor any changes in regulatory mechanisms affecting the protection or management of wolves, their prey, and their habitat for at least 5 years following delisting and evaluate whether, as a result of those changes, the delisted gray wolf entities meet the definition of a threatened species or an endangered species.

Comment 130: One commenter questioned whether Minnesota, Wisconsin, and Michigan adaptively managed wolves in the past to maintain wolf populations at or above minimum management levels or if it was just written into each State's management plans, and asked whether we analyzed this information.

Our Response: In responding to the comment, we assume that the commenter refers to the period between 2012 and 2014 when wolves were federally delisted in the western Great Lakes and States implemented regulated public harvests. During that time, the States of Minnesota, Wisconsin, and Michigan adaptively managed their respective wolf populations and maintained wolf populations well above minimum management levels defined in their respective management plans. This information is discussed in the Post-delisting Management section of the rule for each State. Nonetheless, we further clarify below how the western Great Lake States used an adaptive approach to manage wolf harvest between 2012 and 2014.

Adaptive management may be used to evaluate the effects of a management action to determine if it is being implemented effectively to achieve a desired outcome. In wildlife science, it is an effective method to manage populations when the effect of the management action is unknown or is not well understood, or if managers simply want to take a cautious approach. This allows managers to evaluate population responses over a set time period and then make minor adjustments, if necessary, prior to implementing the management action over another set time period in order to continue working toward the desired management outcome. In the case of wolf harvest in the western Great Lakes, States developed harvest quotas to achieve a management outcome using the best information possible. Managers then evaluated the results of harvest in conjunction with other population metrics obtained through population monitoring efforts, as well as other factors, and made minor adjustments to the following season's harvest regulation. These adjustments were evaluated and made on an annual basis and are likely to be evaluated annually post-delisting.

For example, Minnesota's wolf population objective is to maintain a late-winter wolf population of at least 1,600 wolves. Using the best information available, Minnesota Department of Natural Resources set a quota of 400 wolves for the first season in 2012, and a total of 413 wolves were harvested. After evaluating the harvest and other factors, the Minnesota Department of Natural Resources decreased the quota to 220 wolves in 2013, and a total of 238 wolves were harvested. Once again, after evaluation, the 2014 quota was raised slightly to 250 wolves, and a total of 272 wolves were harvested. Population estimates indicated wolf numbers fluctuated between 2,200 and 2,400 animals during this time. Thus, harvest had minimal impact on the population, and it remained well above Minnesota's management objective.

Similarly, the Wisconsin Department of Natural Resources designed harvest zones and quotas for the first season in 2012, to begin reducing the population toward the management goal of 350 wolves off reservation lands, while concurrently directing harvest to areas with the greatest number of wolf-related conflicts. Although seasons were designed using a total quota system, separate quotas were developed for lands on and off reservations in the State. In 2012, a quota of 201 wolves (116 off reservation; 85 on reservation) was set, and a total of 117 wolves were harvested, all of which were taken off reservation lands. Harvest quotas were adjusted for the start of the 2013 season with a quota of 275 wolves (251 off reservation; 24 on reservation), and a total of 257 wolves were harvested, all of which were taken, again, off reservation lands. After evaluating harvest and population metrics, the 2014 quota was reduced to 156 wolves (150 off reservation; 6 on reservation), and 154 wolves were harvested (all off reservation lands). Meanwhile, between 2012 and 2015, Wisconsin's wolf population was estimated to be 815 and 746, respectively. Although this represented an 8 percent decline, the Wisconsin Department of Natural Resources partially achieved their objective of reducing wolf abundance while maintaining wolf populations well above State management goals.

The Michigan Department of Natural Resources implemented public harvest of wolves during the 2013 season only, and a total of 22 wolves were harvested during the season. Although the effect of harvest may have been evaluated by Michigan Department of Natural Resources biologists, no changes were implemented since no seasons occurred in subsequent years.

Post-Delisting Monitoring

Comment 131: A few commenters urged the Service to update the 2008 post-delisting monitoring plan.

Our Response: The post-delisting monitoring plan that was developed in 2008 for wolves in the Great Lakes area is adequate under section 4(g)(1) of the Act and remains applicable today (for more information, see Post-delisting Monitoring). The post-delisting monitoring plan for wolves in the Great Lakes area relies on a continuation of State monitoring activities, similar to those that have been conducted by Minnesota, Wisconsin, and Michigan Departments of Natural Resources in recent years, and Tribal monitoring. Minnesota, Wisconsin, and Michigan Departments of Natural Resources have monitored wolves for several decades with significant assistance from numerous partners, including the U.S. Forest Service, National Park Service, Wildlife Services, Tribal natural resource agencies, and the Service. To maximize comparability of future post-delisting monitoring data with data obtained before delisting, all three State Departments of Natural Resources have committed to continue their previous wolf-population-monitoring methodology, or to make changes only if they will not reduce the comparability of pre- and post-delisting data.

General

Comment 132: A few commenters noted that the Federal Government has a public trust responsibility to maintain wolves for future generations and the ecosystem functions they support, and, generally, to preserve our Nation's heritage.

Our Response: Our responsibilities with respect to wolves and other listed species are not defined by general principles of public trust, but by the requirements of the Act. As a result of the efforts of many partners in the private and public sector to conserve, protect, and enhance gray wolf populations, the gray wolf entities evaluated in this rule do not qualify for protection under the Act.

Comment 133: One commenter submitted a petition for reclassification of gray wolves in the lower 48 United States. In this petition, they request that we determine the listing status of gray wolves (1) in the lower 48 United States, or (2) in two entities: the Eastern United States and the Western United States, or (3) in four entities: the U.S. West Coast region, the southern Rocky Mountains, the Northeastern United States, and the Midwestern United States. It is the same petition the commenter submitted directly to us on December 17, 2018, and supplemented on February 26, 2019, prior to the publication of our proposal (84 FR 9648, March 15, 2019) for this final rule.

Our Response: We have addressed the petition, as a separate action, elsewhere in this document (see Evaluation of a Petition to Revise the Listings for the Gray Wolf Under the Act). We reviewed all information submitted with the petition and incorporated information, as appropriate, into this final rule.

Policy

Comment 134: One commenter asserted that wolves are an ''endangered species'' or ''threatened species'' because they inhabit only about 15 percent of their historical range, which is not a significant portion of their historical range.

Our Response: The assertion that the gray wolf has not recolonized enough of its range in the lower 48 United States to reach the standard of a significant portion is inconsistent with Service policy because it equates the term ''range'' in the Act's definitions of ''threatened species'' and ''endangered species'' with historical range. (See Our Response to Comment 37).

Comment 135: One commenter suggested that data collected by the States may be biased against wolves and should therefore be excluded from our analysis. They also stated that our status assessment process for gray wolves is biased in favor of agencies, organizations, and individuals that support the killing of wolves and requested clarification on how agencies, organizations, and individuals are chosen to participate in the process.

Our Response: We are required by the Act to make our determinations based solely on the best scientific and commercial data available. Therefore, we include in our analysis any relevant data collected by the States, Tribes, or members of the public that falls into this category.

To assist us in gathering all available information, we ask all members of the public, including States, Tribes, organizations, and individuals, to submit relevant information to us for our consideration. The Act requires us to cooperate with the States to ''the maximum extent practicable'' (16 U.S.C. 1535(a)). However, although we acknowledge the unique positions of States and our obligation to consult with them, we do not assign different weight to the scientific information that they provide. Rather, we evaluate all information we receive, from all sources, to determine whether it is relevant to our assessment and constitutes the best available scientific and commercial data. For additional information on data collected by States, see Our Response to Comment 120.

Comment 136: A few commenters stated that combining the two currently listed gray wolf entities, *i.e.,* (1) Minnesota and (2) the lower 48 United States and Mexico outside of Minnesota, excluding the NRM DPS, for evaluation was inappropriate. They argued that combining the entities is arbitrary and not based on science. Some also maintained that we are obligated, through regulations, to assess each of the two entities separately.

Our Response: We clarify in this final rule our reasons for combining the two currently listed *C. lupus* entities for analysis, and our regulations regarding listed entities that are not ''species'' as defined by the Act (see The Currently Listed *C. lupus* Entities Do Not Meet the Statutory Definition of a ''Species'' and *Why and How We Address Each Configuration of Gray Wolf Entities*). Further, while not required by our regulations, in response to these and other comments we have added separate analyses of the status of each of the two currently listed entities to this rule (See Approach for this Rule).

Comment 137: Some commenters questioned our conclusion that West Coast States wolves are not discrete from NRM wolves. They felt that our application of ''discreteness'' is not consistent with our DPS policy (61 FR 4722, 4725, February 7, 1996), historical information on wolves in the Pacific Northwest, or wolf biology.

Our Response: Our DPS policy states that a population segment of a vertebrate species may be considered discrete if it ''is markedly separated from other populations of the same taxon as a consequence of physical, physiological, ecological, or behavioral factors. Quantitative measures of genetic or morphological discontinuity may provide evidence of this separation.'' We conducted a detailed analysis of the discreteness of ''Pacific Northwest'' wolves (wolves in the West Coast States portion of the combined listed entity and 44-State entity) in our 2013 status review for gray wolves in the Pacific Northwest (78 FR 35709–35713, June 13, 2013). This included analysis of discreteness based on physical, physiological, ecological, and behavioral factors and included analysis of historical information on wolves in the region. We concluded that wolves in the West Coast States are not discrete from wolves in the NRM DPS. Recent scientific information only confirms our 2013 conclusion. Wolf numbers on both sides of the NRM DPS boundary in Washington, Oregon, and California continue to increase, and wolf range in the West Coast States continues to expand (USFWS 2020, p. 28, Appendix 2). Also, data from collared wolves, as well as genetic analyses, show wolves are dispersing between West Coast States where gray wolves are federally protected (California, western Oregon, and western Washington) and the NRM where wolves are delisted (Idaho, Montana, Wyoming, eastern Oregon, eastern Washington, and north-central Utah) (USFWS 2020, pp. 5, 17–18, 28). Moreover, recent genetic research shows that most wolves in Washington and Oregon are dispersers from the NRM or descendants of those dispersers (Hendricks *et al.* 2018, entire). Thus, the best available information indicates that wolves in the West Coast States portion of the combined listed entity (and 44-State entity) are not discrete from NRM wolves.

Comment 138: Referring to statements in the Approach for This Proposed Rule section of our March 15, 2019, proposed rule, one commenter stated that ''Pacific Northwest'' wolves (wolves in western Washington, western Oregon, and northern California) harbor genetic ancestry from Pacific coastal rainforest wolves not present in the northern Rocky Mountains and are not, therefore, simply an extension of the NRM population.

Our Response: Wolves with Pacific coastal wolf genetic ancestry have been reported from both the NRM DPS and the West Coast States. See Our Response to Comment 43.

Comment 139: One commenter indicated that the proposed rule requires further environmental assessment under the National Environmental Policy Act of 1969 (NEPA; 42 U.S.C. 4321 *et seq.*).

Our Response: As noted in the March 15, 2019, proposed rule, NEPA does not apply to our actions taken pursuant to section 4(a) of the Act (*i.e.,* listings, delistings, and reclassifications). Thus, we are not required to prepare an environmental assessment or environmental impact statement, or otherwise meet the requirements of

NEPA, before issuing this final rule. A notice outlining the Service's reasons for this determination was published in the **Federal Register** on October 25, 1983 (48 FR 49244).

Comment 140: One commenter indicated that a lack of reliable data precludes us from making a finding on the status of the gray wolves.

Our Response: The Act instructs us to make our determinations based on the best scientific and commercial data available. We cannot await the development of additional scientific information; rather, we must act on the basis of the data currently available to us. Moreover, we disagree with the commenter that we lack sufficient reliable data to support our determination. Wolves are among the most studied mammals in the world. A great deal of reliable information exists on their ecology and population dynamics.

Comment 141: Several commenters questioned our SPR analysis. Some thought our SPR analysis was inadequate or inconsistent with case law because they believed we relied on the viability of the Great Lakes metapopulation to render all other portions insignificant, or because we did not assess areas of unoccupied historical range to determine if they are significant portions of the range of the combined listed entity. Some disagreed with our conclusions, providing arguments for why they believed specific portions were significant and in danger of extinction. Commenters focused mainly on the West Coast States portion and specific areas of unoccupied historical range.

Our Response: To determine whether any portions of the entity's range may be significant, and thus warrant further consideration in our SPR analysis, we evaluated whether any portions could be considered significant under any reasonable definition of ''significant.'' We asked whether any portions of the range may be biologically meaningful in terms of the resiliency, redundancy, or representation of the entity being evaluated. This approach is consistent with the Act, our implementing regulations, our policies, and case law.

As explained in this rule, we consider the term ''range'' in the SPR phrase to be the area occupied by the species at the time we make our determination (see Our Response to Comment 37). Thus, we did not evaluate portions of unoccupied historical range in our SPR analysis. We also did not rely on the viability of the Great Lakes portion to determine whether portions might be significant. Rather, we determined whether any portions may be significant by looking at whether they may be biologically meaningful in terms of the resiliency, redundancy, or representation of the entity being evaluated (see *Determination of Species Status*).

Comment 142: One commenter stated that the Washington Wolf Plan lacks regulatory assurances or binding commitments that we could reasonably rely upon to know how the Washington Department of Fish and Wildlife intends to manage wolves into the future. They also noted that the Washington Department of Fish and Wildlife is embarking on a State-level Environmental Policy Act process to consider potential changes to the Washington Wolf Plan and its guidance for wolf management in Washington. The commenter contended that this process could lead to fundamental changes to how Washington manages wolves, especially in a post-Federal listing environment, giving the Service no regulatory assurances as to whether gray wolves will be responsibly managed in Washington after a Federal delisting decision. The commenter believed this to be a clear violation of the Act.

Our Response: The commenter presents no information that would indicate that Washington is likely to abandon wolf recovery. To the contrary, Washington has been proactive in managing the recolonization of wolves. The State developed a science-based conservation and management plan that has been implemented since 2011. The plan was developed with the assistance of a 17-member citizen advisory wolf working group over nearly 5 years (2007–2011). The process included extensive public review (23 public meetings and nearly 65,000 comments submitted) and a blind scientific peer review. The Washington Fish and Wildlife Commission unanimously adopted the plan in December 2011. The purpose of the more recent planning effort, referenced by the commenter, is to proactively identify how Washington Department of Fish and Wildlife will manage wolves to ensure their continued conservation once they are removed from the State's endangered species list. The Department is being proactive in seeking public input in designing their post-delisting management strategy. Following Federal delisting, wolves will retain regulatory protections under Washington State law (Revised Code of Washington 77.15.120; Washington Administrative Code 220–610–010) until they meet their State recovery criteria and are delisted by the Washington Department of Fish and Wildlife. As explained elsewhere in this rule, we find those regulatory protections to be sufficient to conserve wolves after delisting.

Evaluation of a Petition To Revise the Listings for the Gray Wolf Under the Act

Background

Section 4 of the Act (16 U.S.C. 1533) and its implementing regulations in title 50 of the Code of Federal Regulations (50 CFR part 424) set forth the procedures for adding species to, removing species from, or reclassifying species on the Federal Lists of Endangered and Threatened Wildlife and Plants (Lists or List) in 50 CFR part 17. Section 4(b)(3)(A) of the Act requires that we make a finding on whether a petition to add a species to the List (*i.e.,* ''list'' a species), remove a species from the List (*i.e.,* ''delist'' a species), or change a listed species' status from endangered to threatened or from threatened to endangered (*i.e.,* ''reclassify'' a species) presents substantial scientific or commercial information indicating that the petitioned action may be warranted. To the maximum extent practicable, we are to make this finding within 90 days of our receipt of the petition and publish the finding promptly in the **Federal Register**.

Our regulations establish that substantial scientific or commercial information with regard to a 90-day petition finding refers to ''credible scientific or commercial information in support of the petition's claims such that a reasonable person conducting an impartial scientific review would conclude that the action proposed in the petition may be warranted'' (50 CFR 424.14(h)(1)(i)).

A species may be determined to be an endangered species or a threatened species because of one or more of the five factors described in section 4(a)(1) of the Act (16 U.S.C. 1533(a)(1)). The five factors are:

(a) The present or threatened destruction, modification, or curtailment of its habitat or range (Factor A);

(b) Overutilization for commercial, recreational, scientific, or educational purposes (Factor B);

(c) Disease or predation (Factor C);

(d) The inadequacy of existing regulatory mechanisms (Factor D); and

(e) Other natural or manmade factors affecting its continued existence (Factor E).

These factors represent broad categories of natural or human-caused actions or conditions that could have an effect on a species' continued existence.

In evaluating these actions and conditions, we look for those that may have a negative effect on individuals of the species, as well as other actions or conditions that may ameliorate any negative effects or may have positive effects.

We use the term ''threat'' to refer in general to actions or conditions that are known to, or are reasonably likely to, affect individuals of a species negatively. The term ''threat'' includes actions or conditions that have a direct impact on individuals (direct impacts), as well as those that affect individuals through alteration of their habitat or required resources (stressors). The term ''threat'' may encompass—either together or separately—the source of the action or condition, or the action or condition itself. However, the mere identification of any threat(s) may not be sufficient to compel a finding that the information in the petition is substantial information indicating that the petitioned action may be warranted. The information presented in the petition must include evidence sufficient to suggest that these threats may be affecting the species to the point that the species may meet the definition of an endangered species or threatened species under the Act.

If we find that a petition presents such information, our subsequent status review will evaluate all identified threats by considering the individual-, population-, and species-level effects and the expected response by the species. We will evaluate individual threats and their expected effects on the species, then analyze the cumulative effect of the threats on the species as a whole. We also consider the cumulative effect of the threats in light of those actions and conditions that are expected to have positive effects on the species—such as any existing regulatory mechanisms or conservation efforts that may ameliorate threats. It is only after conducting this cumulative analysis of threats and the actions that may ameliorate them, and the expected effect on the species now and in the foreseeable future, that we can determine whether the species meets the definition of an endangered species or threatened species under the Act. If we find that a petition presents substantial scientific or commercial information indicating that the petitioned action may be warranted, the Act requires that we promptly commence a review of the status of the species, and we will subsequently complete a status review in accordance with our prioritization methodology for 12-month findings (81 FR 49248, July 27, 2016).

Species and Range

The gray wolf (*Canis lupus*) is currently listed as: (1) Threatened in Minnesota; and (2) endangered in all or portions of 44 of the contiguous United States. The petition includes three alternatives, each representing a separate petitioned action, for revising the currently listed gray wolf entities. Each of the alternatives involve splitting and/or combining the gray wolf in the lower 48 United States into DPSs, and all exclude the Mexican wolf subspecies. Two of the alternatives involve relisting gray wolves in the Northern Rocky Mountains. Because each alternative represents a separate petitioned action, we evaluated them separately.

1. lower-48 DPS—list as threatened; or

2. Western and Eastern DPSs—both list both as threatened; or

3. Northern Rocky Mountains (NRM) DPS—remain delisted,

Midwest DPS—list as threatened,

West Coast DPS—list as endangered,

Southern Rockies DPS—list as endangered, and

Northeast DPSs—list as endangered.

Petition History

On December 17, 2018, we received a petition from the Center for Biological Diversity and the Humane Society of the United States, requesting that the existing listing for gray wolf be revised. The petition clearly identified itself as such and included the requisite identification information for the petitioners, required at 50 CFR 424.14(c). Additional supporting materials required under 50 CFR 424.14(b) were received on February 26, 2019. This finding addresses the petition.

Findings

Alternatives 1 and 2

We reviewed the petition, sources cited in the petition, and other readily available information. We considered the factors under section 4(a)(1) and assessed the cumulative effect that the threats identified within the factors may have on the species now and in the foreseeable future. We considered a ''threat'' as any action or condition that may be known to, or is reasonably likely to, negatively affect individuals of a species. This includes those actions or conditions that may have a direct impact on individuals, as well as those that may affect individuals through alteration of their habitat or required resources. The mere identification of threats is not sufficient to constitute substantial information indicating that revising the current gray wolf listed entities may be warranted. Based on our review of the petition, sources cited in the petition, and other readily available information, regarding development and unoccupied suitable habitat (Factor A), human-caused mortality and mortality rates (Factor B), disease (Factor C), and reduced genetic diversity (Factor E), we find that the petition does not provide substantial scientific or commercial information indicating that revising the listings for the gray wolf (*Canis lupus*) to: (1) A threatened lower-48 DPS; or (2) threatened Western and Eastern DPSs may be warranted.

Alternative 3

Based on our review of the petition, sources cited in the petition, and other readily available information, we find that the petition does not provide substantial scientific or commercial information indicating that the West Coast, Southern Rockies, or Northeast gray wolf petitioned entities may qualify as DPSs and, therefore, that they may be listable entities under the Act. Although we find the petition provides substantial information indicating that the Midwest population may qualify as a valid DPS, we do not undertake further evaluation of Alternative 3 because the petitioners failed to present substantial information for us to conclude that this entire set of petitioned entities, comprising five DPSs (including the currently delisted NRM DPS), is a valid option for revising the current gray wolf (*Canis lupus*) listed entities. Petitioners presented substantial information only with respect to a Midwest DPS of gray wolf, and did not present any information that would allow us to evaluate whether the remainder of the currently listed 44-State entity may be a listable entity and, if so, whether it may warrant listing as threatened or endangered. Finally, we would reach this same conclusion even if the petitioner had provided substantial information that the Southern Rockies petitioned entity may qualify as a valid listable entity under the Act.

The basis for our findings on this petition, and other information regarding our review of the petition, can be found as an appendix at *http://www.regulations.gov* under Docket No. FWS–HQ–ES–2018–0097 under the Supporting Documents section.

Determination of Species Status

Section 4 of the Act (16 U.S.C. 1533) and its implementing regulations (50 CFR part 424) set forth the procedures for determining whether a species meets the definition of an ''endangered species'' or a ''threatened species''. The

Act defines endangered species as a species ''in danger of extinction throughout all or a significant portion of its range,'' and a threatened species as a species ''likely to become an endangered species within the foreseeable future throughout all or a significant portion of its range.'' For a more detailed discussion on the factors considered when determining whether a species meets the definition of an endangered species or a threatened species and our analysis on how we determine the foreseeable future in making these decisions, see Regulatory Framework.

If we determine that any of the entities evaluated in this rule are not in danger of extinction now or likely to become so in the foreseeable future throughout all of its range, we then consider whether it may be in danger of extinction or likely to become so in the foreseeable future in a significant portion of its range [6]— that is, whether there is any portion of the species' range for which it is true that both (1) the portion is significant; and (2) the species is in danger of extinction now or likely to become so in the foreseeable future in that portion. Depending on the case, it might be more efficient for us to address the ''significance'' question or the ''status'' question first. We can choose to address either question first. Regardless of which question we address first, if we reach a negative answer with respect to the first question that we address, we do not need to evaluate the other question for that portion of the species' range.

Currently Listed Entities

Minnesota: Determination of Status Throughout All of Its Range

When wolves in Minnesota were first listed under the Act in 1974, there were approximately 750 wolves occupying the northeast corner of the State. The primary cause of the decline of wolves was targeted elimination by humans. However, gray wolves are highly adaptable; their populations are remarkably resilient as long as prey availability, habitat, and regulation of human-caused mortality are adequate. Wolf populations can rapidly overcome severe disruptions, such as pervasive human-caused mortality or disease, once those disruptions are removed or reduced.

With the protections of the Act, gray wolves began to increase in numbers and expand their range in Minnesota; because of this progress toward recovery, they were reclassified as a threatened species in 1978. Since that time, the number of wolves and the overall extent of their range in Minnesota have increased further; wolves in Minnesota now exist as a large, stable population of about 2,655 individuals that are biologically connected to expansive and robust populations in Canada and adjacent States of Wisconsin and Michigan.

To sustain populations over time, a species must have a sufficient number and distribution of healthy populations to withstand annual variation in its environment (resiliency), novel changes in its biological and physical environment (representation), and catastrophes (redundancy) (Shaffer and Stein 2000, pp. 308–311; Smith et al. 2018, p. 304). A species with a sufficient number and distribution of healthy populations is generally better able to adapt to future changes and to tolerate stressors (factors that cause a negative effect to a species or its habitat).

Wolves in Minnesota are highly abundant, have a stable trend (USFWS 2020, pp. 20–22 and Appendix 1), and are broadly distributed throughout high-quality habitat in the State (see Great Lakes Area Suitable Habitat—MN discussion). Their high reproductive potential (USFWS 2020, p. 8) enables them to withstand high mortality levels and their ability to disperse long distances allows them to quickly expand and recolonize vacant habitats (USFWS 2020, p. 7). Wolves are also highly adaptable animals; they are able to inhabit and survive in a variety of habitats and are efficient at shifting their prey to exploit available food resources (USFWS 2020, p. 6). Furthermore, wolves in Minnesota do not function as an isolated population occurring only within the boundaries of the State. They are interconnected with the large, expansive population of wolves in Canada and with wolves in Wisconsin and Michigan (USFWS 2020, p. 28). Populations that are connected to and interact with other populations of the same species (metapopulations) are widely recognized as being more secure over the long term than are several isolated populations that contain the same total number of packs and individuals (USFWS 1994, appendix 9). This security arises because adverse effects experienced by one of its subpopulations resulting from genetic drift, demographic shifts, and local environmental fluctuations can be asynchronous and countered by occasional influxes of individuals from other subpopulations in the metapopulation, which can increase or better maintain genetic diversity. Thus, the high levels of genetic diversity evident in Minnesota wolves (see discussion under Genetic Diversity and Inbreeding) are supported through interconnections with wolves in Canada and neighboring States. This genetic diversity provides wolves in Minnesota with a greater ability to adapt to both short-term and long-term changes in their environment.

Wolves in Minnesota are highly resilient to perturbations because of their abundance and broad distribution across high-quality habitat in the State. Biological factors also play an important part in the resiliency of wolves in Minnesota, namely their high reproductive capacity and genetic diversity. Those factors provide resiliency in the face of stochastic variability (annual environmental fluctuations, periodic disturbances, and impacts of anthropogenic stressors). Life-history characteristics of the wolf, including high dispersal capability and adaptability, along with the high genetic diversity evident in Minnesota wolves, provides sufficient adaptive capacity such that their long-term survival in the State is assured. Additionally, catastrophic events have not affected wolf populations at a State-wide scale in Minnesota, and we found no indication that these events would impact the long-term survival of wolves throughout this State in the future.

The recovery of wolves in Minnesota is attributable primarily to successful interagency cooperation in the management of human-caused mortality. That mortality is the most significant barrier to the long-term conservation of wolves. Therefore, this source of mortality remains the primary challenge in managing the wolf population to maintain its recovered status into the foreseeable future. Legal harvest and agency control to mitigate depredations on livestock are the primary human-caused mortality factors that managers can manipulate to achieve management objectives and minimize depredation risk associated with repeated conflicts, respectively, once delisting occurs. Wolves in Minnesota now greatly exceed the recovery criteria in the revised recovery plan that the Minnesota population must be stable or growing and its continued survival be assured, with a population goal of 1,251–1,400 wolves. As a result, we can expect to see some reduction in wolf populations in Minnesota as managers begin to institute management strategies with the

[6] ''Portion of its range'' refers to the members of the species that occur in a particular geographic area of the species' current range (not the habitat in which those members occur). This is because, while ''portion of the range'' is part of the species' range (*i.e.,* a geographical area), when we evaluate a significant portion of its range, we consider the contribution of the individuals in that portion.

objective of stabilizing or reversing population growth while continuing to maintain wolf populations well above Federal recovery criteria.

Using an adaptive-management approach that adjusts harvest based on population estimates and trends, the initial objectives of the State may be to reduce wolf populations and then manage for sustainable populations, similar to how States manage all other game species.

Based on our analysis, we conclude that Minnesota will maintain an abundant and well-distributed wolf population that will remain above recovery levels for the foreseeable future, and that the threat of human-caused mortality has been sufficiently addressed. The State of Minnesota has wolf-management laws, plans, and regulations that adequately regulate human-caused mortality. The State has committed to manage its wolf population at or above recovery levels, has recently demonstrated this commitment, and expect this commitment to continue into the foreseeable future. Adequate wolf-monitoring programs, as described in the State wolf-management plan, are likely to identify high mortality rates or low birth rates that warrant corrective action by the management agency. Based on our review, we conclude that regulatory mechanisms in Minnesota are adequate to maintain the recovered status of wolves in the State once they are federally delisted.

Based on the biology of wolves and our analysis of threats, we conclude that wolf populations in Minnesota will continue to be maintained at or above identified recovery levels. As a result, wolf biology (namely the species' reproductive capacity, adaptability, and dispersal ability) and the availability of large, secure blocks of suitable habitat within the occupied areas will ensure the maintenance of populations capable of withstanding all other foreseeable threats. The amount and distribution of occupied wolf habitat currently provides, and will continue to provide into the foreseeable future, large core areas that contain high-quality habitat of sufficient size and with sufficient prey to support a recovered wolf population. Our analysis of land management shows these areas, specifically Minnesota wolf management zone A, will maintain their suitability into the foreseeable future. Therefore, we conclude that, Minnesota contains a sufficient amount of high-quality wolf habitat to support wolf populations above recovery levels into the future.

While disease and parasites can temporarily affect individuals, specific packs, or small, isolated populations (*e.g.,* Isle Royale), seldom do they pose a significant threat to large wolf populations, such as those that occur in Minnesota. As long as wolf populations are managed above recovery levels, these factors are not likely to threaten the viability of the wolf population in Minnesota at any point in the foreseeable future. Climate change is also likely to remain an insignificant factor affecting the population dynamics of wolves into the foreseeable future, due to the adaptability of the species. Finally, based on our analysis, we conclude that cumulative effects of threats do not now, nor are likely to within the foreseeable future, threaten the viability of wolves throughout their range in Minnesota.

We have carefully assessed the best scientific and commercial information available regarding the past, present, and future threats to wolves in Minnesota. We evaluated the status of wolves in Minnesota and assessed the factors likely to negatively affect them, including threats identified at listing, at the time of reclassification, now, and into the foreseeable future. The best available information indicates that wolves in Minnesota are recovered and do not meet the definition of an endangered species or a threatened species because of any one or a combination of the five factors set forth in the Act.

Specifically, we have determined, based on the best available information, that human-caused mortality (Factor C); habitat and prey availability (Factor A); disease and parasites (Factor C); genetic diversity and inbreeding (Factor E); commercial, recreational, scientific, or educational uses (Factor B); climate change (Factor E); or other threats, singly or in combination, are not of sufficient imminence, intensity, or magnitude to indicate that wolves in Minnesota are in danger of extinction or likely to become so within the foreseeable future throughout all of their range. We have also determined that ongoing effects of recovery efforts, which resulted in a significant expansion of the occupied range of and number of wolves in Minnesota over the past decades, in conjunction with State, Tribal, and Federal agency wolf management and regulatory mechanisms that will be in place following delisting across their occupied range, will be adequate to ensure the conservation of wolves in Minnesota. These activities will maintain an adequate prey base, preserve denning and rendezvous sites, monitor disease, restrict human take, and maintain wolf populations well above the recovery criteria established in the revised recovery plan (USFWS 1992, pp. 25–28).

We have identified the best available scientific studies and information assessing human-caused mortality; habitat and prey availability; the impacts of disease and parasites; commercial, recreational, scientific, or educational uses; gray wolf adaptability, including with respect to changing climate; recovery activities and regulatory mechanisms that will be in place following delisting; and predictions about how these may affect wolves in Minnesota in making determinations about their future status, and we conclude that it is reasonable to rely on these sources. Therefore, after assessing the best available information, we have determined that wolves in Minnesota are not in danger of extinction throughout all of their range, nor are they likely to become so in the foreseeable future.

Because we determined that wolves in Minnesota are not in danger of extinction or likely to become so in the foreseeable future throughout all of their range, we will consider whether there are any significant portions of their range in Minnesota that are in danger of extinction or likely to become so in the foreseeable future.

Minnesota: Determination of Status Throughout a Significant Portion of Its Range

Under the Act and our implementing regulations, a species warrants listing if it is in danger of extinction or likely to become so in the foreseeable future throughout all or a significant portion of its range (SPR). Having determined that wolves in Minnesota are not in danger of extinction now or likely to become so in the foreseeable future throughout all of their range in Minnesota, we now consider whether they may be in danger of extinction or likely to become so in the foreseeable future in a significant portion of their range in Minnesota.

After reviewing the biology of and potential threats of wolves in Minnesota, we have not identified any portions of the State for which both (1) gray wolves may be in danger of extinction or likely to become so in the foreseeable future (*i.e.,* areas in which threats may be concentrated) and (2) the portion may be significant. While some portions may be at increased risk from human-caused mortality or factors related to small numbers, we did not find that any of these portions may be significant. We provide our analysis below.

First, portions outside the core wolf range in northern Minnesota may be at

greater risk from human-caused mortality or from factors related to small numbers of individuals. However, these portions are not biologically meaningful in terms of their contribution to the resiliency, redundancy, or representation of wolves in Minnesota because they contain only lone dispersers from the core wolf range that are not members of established breeding packs. Thus, they do not contribute to the overall demographic or genetic health of the Minnesota population and they lack genetic or ecological uniqueness relative to other wolves in Minnesota. Therefore, we find that these portions are not ''significant'' under any reasonable definition of that term because they are not biologically meaningful to the Minnesota entity in terms of its resiliency, redundancy, or representation.

Second, the State wolf-management zone (Zone B) in which post-delisting depredation control would be allowed under a broader set of circumstances than in the core population zone, and, thus, would likely experience higher levels of human-caused mortality upon delisting, is not significant under any reasonable definition of ''significant.'' The wolves in this zone occur on the periphery of the large core population, occur in areas of limited habitat suitability, and do not contribute appreciably to (and are thus not biologically meaningful to) the resiliency, redundancy, or representation of the Minnesota entity.

Wolves in this higher intensity management zone are not meaningful to the resiliency of the Minnesota entity because they constitute a small proportion of wolves in Minnesota (Zone B contains about 15 percent of the Minnesota wolf population). Thus, wolves in the higher intensity management zone do not contribute meaningfully to the ability of wolves in Minnesota to withstand stochastic processes.

Likewise, the higher intensity management zone is not meaningful to the redundancy of the Minnesota entity because wolves in this zone represent a relatively small number and distribution of wolves in Minnesota and catastrophic events have not affected wolf populations at a State-wide scale in Minnesota, and we found no indication that these events would impact the long-term survival of wolves throughout this State in the future. Thus, wolves in the higher intensity management zone do not contribute meaningfully to the ability of wolves in Minnesota to withstand catastrophic events. Wolves in the higher intensity management zone are not meaningful to the representation of wolves in Minnesota because they are genetically similar to other wolves in the core area of Minnesota and because gray wolves are a highly adaptable generalist species with high dispersal capability, thus allowing them to adapt to changing environmental conditions. Therefore, we do not find that these portions may be significant under any reasonable definition of ''significant'' because they are not biologically meaningful to wolves in Minnesota in terms of resiliency, redundancy, or representation.

Minnesota: Final Determination

After a thorough review of all available information and an evaluation of the five factors specified in section 4(a)(1) of the Act, as well as consideration of the definitions of ''threatened species'' and ''endangered species'' contained in the Act and the reasons for delisting as specified at 50 CFR 424.11(e), we conclude that removing the gray wolf (*Canis lupus*) in Minnesota from the List of Endangered and Threatened Wildlife (50 CFR 17.11) is appropriate. Although this entity is not a species as defined under the Act, we have collectively evaluated the current and potential threats to gray wolves in Minnesota, including those that result from past loss of historical range. Wolves in Minnesota do not meet the definition of a threatened species or an endangered species as a result of the reduction of threats as described in the analysis of threats and are neither currently in danger of extinction, nor likely to become so in the foreseeable future, throughout all or a significant portion of their range within the State.

44-State Entity: Determination of Status Throughout All of Its Range

In 1978, when gray wolves were listed in the conterminous States other than Minnesota, there was a small group of wolves on Isle Royale (Michigan) in Lake Superior and perhaps a few individual wolves in northern Michigan and Wisconsin. The primary cause of the decline of wolves in the 44-State entity was targeted elimination by humans. However, gray wolves are highly adaptable; their populations are remarkably resilient as long as prey availability, habitat, and regulation of human-caused mortality are adequate. Wolf populations can rapidly overcome severe disruptions, such as pervasive human-caused mortality or disease, once those disruptions are removed or reduced.

With the protections of the Act, gray wolves began to repopulate Michigan and Wisconsin through expansion of the populations in Minnesota and Canada. Wolves in the 44-State entity now primarily exist as a large, stable to growing, population of about 1,576 individuals in Wisconsin and Michigan that is biologically connected to expansive and robust populations in Canada and the adjacent State of Minnesota. Within the 44-State entity there are also a small number of colonizing wolves in the West Coast States and central Rocky Mountains that represent the expanding edge of a larger population outside the 44-State entity (in the northern Rocky Mountains and western Canada) (figure 2). We focus our analysis where wolves occur.

The recovery criteria for wolves in the Eastern United States, as outlined in the Eastern Timber Wolf Recovery Plan and Revised Recovery Plan, includes the maintenance of the Minnesota population and reestablishment of at least one viable wolf population within the historical range of the eastern timber wolf outside of Minnesota and Isle Royale, Michigan (see *Recovery Criteria for the Eastern United States*). The viable population outside of Minnesota has been reestablished in Wisconsin and Michigan.

Within the 44-State entity, the wolf population in Wisconsin and Michigan is stable to slightly increasing and currently numbers at least 1,576 (914 in Wisconsin and 695 in Michigan) (USFWS 2020, pp. 21–24 and Appendix 1). Wolves are broadly distributed throughout high-quality habitat in the northern portions of both States (see Great Lakes Area Suitable Habitat—WI and MI discussions). Their high reproductive potential (USFWS 2020, p. 8) enables them to withstand increased levels of human-caused mortality and their ability to disperse long distances allows them to quickly expand and recolonize vacant habitats (USFWS 2020, p. 7). Wolves are also highly adaptable animals; they are able to inhabit and survive in a variety of habitats and take advantage of available food resources (USFWS 2020, p. 6). Furthermore, biologically, wolves in Wisconsin and Michigan do not function as an isolated population. They are interconnected with the large, expansive population of wolves in Canada and with wolves in Minnesota (USFWS 2020, p. 28).

Populations that are connected to and interact with other populations of the same species (metapopulations) are widely recognized as being more secure over the long term than are several isolated populations that contain the same total number of packs and individuals (USFWS 1994, appendix 9). This is because adverse effects

experienced by one of its subpopulations resulting from genetic drift, demographic shifts, and local environmental fluctuations can be asynchronous and countered by occasional influxes of individuals from other subpopulations in the metapopulation, which can increase or better maintain genetic diversity. Thus, the genetic diversity of the wolves in Wisconsin and Michigan (see discussion under Genetic Diversity and Inbreeding) is supported through interconnections with wolves in Canada and neighboring Minnesota. This genetic diversity provides wolves in Wisconsin and Michigan with a greater ability to adapt to both short-term and long-term changes in their environment. A mixture of western gray wolves and eastern wolves in the Great Lakes area may provide additional adaptive capacity (USFWS 2020, pp. 2–3).

Wolves in Wisconsin and Michigan are highly resilient to perturbations because of their abundance and broad distribution across high-quality habitat in these States. Biological factors also play an important part in the resiliency of wolves in Wisconsin and Michigan, namely their high reproductive capacity and genetic diversity. Those factors provide resiliency in the face of stochastic variability (annual environmental fluctuations, periodic disturbances, and impacts of anthropogenic stressors). Life-history characteristics of the wolf, including high dispersal capability and adaptability, along with the high genetic diversity evident in wolves in Wisconsin and Michigan, provides sufficient adaptive capacity such that their long-term survival is assured. Additionally, catastrophic events have not affected wolf populations at a multi-State scale in Wisconsin and Michigan, and we found no indication that these events would impact the long-term survival of wolves throughout these States in the future.

The wolves in Wisconsin and Michigan contain sufficient resiliency, redundancy, and representation to sustain populations within the 44-State entity over time. Therefore, we conclude that the relatively few wolves that occur within the 44-State entity outside of Wisconsin and Michigan, including those in the West Coast States and central Rocky Mountains as well as lone dispersers in other States, are not necessary for the recovered status of the 44-State entity. However, the viability of the entity is further enhanced by wolves that occur outside of Wisconsin and Michigan. Wolves from the northern Rocky Mountains and western Canada are expanding into the 44-State entity in Oregon, Washington, California, and Colorado (figure 2). With ongoing State management in the NRM DPS, further expansion of wolves into the 44-State entity is likely to continue in the West Coast States and possibly the central Rocky Mountains. Although wolves in these areas would add to resiliency, redundancy, and representation, they are not necessary in order to conserve wolves to the point that they no longer meet the definitions of endangered or threatened under the Act. Furthermore, although having wolves in unoccupied areas could also contribute to resiliency, redundancy, and representation, they are not necessary in order to conserve wolves to the point that they no longer meet the definitions of endangered or threatened under the Act.

The recovery of the 44-State entity is attributable primarily to successful interagency cooperation in the management of human-caused mortality. That mortality is the most significant barrier to the long-term conservation of wolves. Therefore, this source of mortality remains the primary challenge in managing the wolf population to maintain its recovered status into the foreseeable future. Legal harvest and agency control to mitigate depredations on livestock are the primary human-caused mortality factors that management agencies can manipulate to achieve management objectives and minimize depredation risk associated with repeated conflicts, respectively, once delisting occurs.

Wolves in Wisconsin and Michigan now greatly exceed the recovery criteria in the revised recovery plan for a second population outside Minnesota and Isle Royale (for both a population that is connected to Minnesota (at least 100 wolves) and a population that is separated from Minnesota (at least 200 wolves)). As a result, we can expect to see some reduction in wolf populations in Wisconsin and Michigan as those States begin to institute management strategies (such as increased depredation control and wolf-hunting seasons) with the objective of stabilizing or reversing population growth while continuing to maintain wolf populations well above Federal recovery requirements. Using an adaptive-management approach that adjusts harvest based on population estimates and trends, the initial objectives of States may be to reduce wolf populations and then manage for sustainable populations, similar to how States manage all other game species. For example, in 2013–2014, during a period when gray wolves were federally delisted in the Great Lakes area, Wisconsin reduced the State's wolf harvest quota by 43 percent in response to a reduced (compared to the previous year) estimated size of the wolf population. We expect Washington, Oregon and California will manage wolves through appropriate laws and regulations to ensure that the recovery objectives outlined in their respective wolf management plans are achieved, even though wolves in these areas are not necessary in order to conserve wolves to the point that they no longer meet the definitions of endangered or threatened under the Act.

Based on our analysis, we conclude that Wisconsin and Michigan will maintain an abundant and well-distributed wolf population in their States above recovery levels for the foreseeable future, and that the threat of human-caused mortality has been sufficiently reduced. Both States have wolf-management laws, plans, and regulations that adequately regulate human-caused mortality. Each of the States has committed to manage its wolf population at or above viable population levels (at least 350 in Wisconsin and at least 200 in Michigan; see State Management in Minnesota, Wisconsin, and Michigan), and we do not expect this commitment to change. Adequate wolf-monitoring programs, as described in the State wolf-management plans, are likely to identify high mortality rates or low birth rates that warrant corrective action by the management agencies. Based on our review, we conclude that regulatory mechanisms in both States are adequate to maintain the recovered status of wolves in the 44-State entity once they are federally delisted. Further, while relatively few wolves occur in the west coast portion of the 44-State entity at this time, and State wolf-management plans for Washington, Oregon, and California do not yet include population management goals, these plans include recovery objectives intended to ensure the reestablishment of self-sustaining populations in these States. In addition, we expect wolves in the NRM and western Canada to continue to expand into unoccupied suitable habitats in the Western United States, as envisioned in State wolf conservation and management plans. Although this range expansion would provide for additional redundancy, it is not needed to recover the gray wolf in the 44-State entity.

Based on the biology of wolves and our analysis of threats, we conclude that, as long as wolf populations in Wisconsin and Michigan are maintained at or above identified recovery levels, wolf biology (namely, the species' reproductive capacity) and the availability of large, secure blocks of

suitable habitat within the occupied areas will enable the maintenance of populations capable of withstanding all other foreseeable threats. Although much of the historical range of the 44-State entity is no longer occupied, we find that the amount and distribution of occupied wolf habitat currently provides, and will continue to provide into the foreseeable future, large core areas that contain high-quality habitat of sufficient size and with sufficient prey to support a recovered wolf population. Our analysis of land management shows these areas, specifically Wisconsin Wolf Zone 1 and the Upper Peninsula of Michigan, will maintain their suitability into the foreseeable future. Therefore, we conclude that, despite the loss of large areas of historical range for the 44-State entity, Wisconsin and the Upper Peninsula of Michigan contain a sufficient amount of high-quality wolf habitat to support wolf populations above recovery levels into the future.

While disease and parasites can temporarily affect individuals, specific packs, or small, isolated populations (*e.g.,* Isle Royale), seldom do they pose a significant threat to large wolf populations, such as those found in Wisconsin and Michigan. As long as wolf populations are managed above recovery levels, these factors are not likely to threaten the viability of the wolf population in the 44-State entity at any point in the foreseeable future. Climate change is also likely to remain an insignificant factor affecting the population dynamics of wolves into the foreseeable future, due to the adaptability of the species. Finally, based on our analysis, we conclude that cumulative effects of threats do not now, nor are they likely to within the foreseeable future, threaten the viability of the 44-State entity throughout the range of wolves in the 44-State entity.

We have carefully assessed the best scientific and commercial information available regarding the past, present, and future threats to the 44-State entity. We evaluated the status of the 44-State entity and assessed the factors likely to negatively affect it, including threats identified at listing, at the time of reclassification, now, and into the foreseeable future. While wolves in the 44-State entity currently occupy only a portion of wolf historical range, the best available information indicates that the 44-State entity is recovered and does not meet the definition of an endangered species or a threatened species because of any one or a combination of the five factors set forth in the Act.

Specifically, we have determined, based on the best available information, that human-caused mortality (Factor C); habitat and prey availability (Factor A); disease and parasites (Factor C); genetic diversity and inbreeding (Factor E); commercial, recreational, scientific, or educational uses (Factor B); climate change (Factor E); or other threats, singly or in combination, are not of sufficient imminence, intensity, or magnitude to indicate that the 44-State entity is in danger of extinction or likely to become so within the foreseeable future throughout all of its range. We have also determined that ongoing effects of recovery efforts, which resulted in a significant expansion of the occupied range of and number of wolves in the 44-State entity over the past decades, in conjunction with State, Tribal, and Federal agency wolf management and regulatory mechanisms that will be in place following delisting of the entity across its occupied range, will be adequate to ensure the conservation of wolves in the 44-State entity. These activities will maintain an adequate prey base, preserve denning and rendezvous sites, monitor disease, restrict human take, and keep wolf populations well above the recovery criteria established in the revised recovery plan (USFWS 1992, pp. 25–28).

We have identified the best available scientific studies and information assessing human-caused mortality; habitat and prey availability; the impacts of disease and parasites; commercial, recreational, scientific, or educational uses; gray wolf adaptability, including with respect to changing climate; recovery activities and regulatory mechanisms that will be in place following delisting; and predictions about how these may affect the 44-State entity in making determinations about the 44-State entity's future status, and we conclude that it is reasonable to rely on these sources. Therefore, after assessing the best available information, despite the large amount of lost historical range (see Historical Context of Our Analysis), we have determined that the 44-State entity is not in danger of extinction throughout all of its range, nor is it likely to become so in the foreseeable future.

Because we determined that the gray wolf 44-State entity is not in danger of extinction or likely to become so in the foreseeable future throughout all of its range, we will consider whether there are any significant portions of its range that are in danger of extinction or likely to become so in the foreseeable future.

44-State Entity: Determination of Status Throughout a Significant Portion of Its Range

After reviewing the biology of the 44-State entity and potential threats, we have not identified any portions of the 44-State entity for which both (1) gray wolves may be in danger of extinction or likely to become so in the foreseeable future (*i.e.,* areas in which threats may be concentrated) and (2) the portion may be significant. We reiterate that ''range'' refers to the general geographical area within which the species is found at the time of our determination (see *Definition and Treatment of Range*). ''Portion of its range'' refers to the members of the species that occur in a particular geographic area of the species' current range. This is because, while ''portion of the range'' is part of the species' range (*i.e.,* a geographical area), when we evaluate a significant portion of its range, we consider the contribution of the individuals that are in that portion at the time we make a determination. While some portions may be at increased risk from human-caused mortality or factors related to small numbers, we did not find that any of these portions may be significant. We provide our analysis below.

First, portions peripheral to the Wisconsin-Michigan population that may frequently contain lone dispersing wolves (*e.g.,* the Lower Peninsula of Michigan, eastern North and South Dakota) or may contain few wolves (*e.g.,* Isle Royale) may be at greater risk from human-caused mortality or from factors related to small numbers of individuals. However, these portions are not biologically meaningful to the 44-State entity in terms of resiliency, redundancy, or representation because they contain only lone dispersers from the core wolf range or few or no breeding pairs. Thus, they do not contribute to the overall demographic or genetic diversity of the Wisconsin-Michigan population and they lack genetic or ecological uniqueness relative to other wolves in the States. Therefore, we find that these portions are not ''significant'' under any reasonable definition of that term because they are not biologically meaningful to the 44-State entity in terms of its resiliency, redundancy, or representation.

Second, State wolf-management zones in which post-delisting depredation control would be allowed under a broader set of circumstances than in core population zones (and, thus, would likely experience higher levels of human-caused mortality upon the 44-State entity's delisting), such as

Wisconsin Wolf Management Zones 3 and 4, are not significant under any reasonable definition of ''significant.'' The wolves in these zones occur on the periphery of a large population (the Wisconsin-Michigan population), occur in areas of limited habitat suitability, and do not contribute appreciably to (and are thus not biologically meaningful to) the resiliency, redundancy, or representation of the 44-State entity.

Wolves in these higher intensity management zones are not meaningful to the resiliency of the 44-State entity because, even though they contain multiple established packs in addition to lone wolves, they constitute a small proportion of wolves in the Wisconsin-Michigan population and, consequently, the 44-State entity (Zones 3 and 4 contain about 6 percent of the Wisconsin wolf population). Upon delisting, a large population of wolves will still exist in Wisconsin and Michigan outside of these areas. Thus, wolves in these higher intensity management zones do not contribute meaningfully to ability of wolves in the 44-State entity to withstand stochastic processes.

Likewise, these higher intensity management zones are not meaningful to the redundancy of the 44-State entity because wolves in these zones represent a relatively small number and distribution of populations or packs in Wisconsin and Michigan and catastrophic events have not affected wolf populations at a multi-State scale in Wisconsin and Michigan, and we found no indication that these events would impact the long-term survival of wolves throughout these two States in the future. Thus, wolves in these higher intensity management zones do not contribute meaningfully to the ability of the Wisconsin-Michigan population, or 44-State entity, to withstand catastrophic events.

Finally, wolves in these higher intensity management zones are not meaningful to the representation of the 44-State entity because they are genetically similar to other wolves in the Wisconsin-Michigan area of the 44-State entity and because gray wolves are a highly adaptable generalist species with high dispersal capability, thus allowing them to adapt to changing environmental conditions. Therefore, we do not find that these portions may be significant under any reasonable definition of ''significant'' because they are not biologically meaningful to the 44-State entity in terms of its resiliency, redundancy, or representation.

Third, the small number of wolves occurring in the West Coast States and the central Rocky Mountains are not a significant portion of the 44-State entity. Our evaluation of whether any portions of the range may be ''significant'' is a biological inquiry. We consider whether any portions are biologically meaningful in terms of the resiliency, redundancy, or representation of gray wolves in the 44-State entity. When the gray wolf was listed in 1978, there were about 1,200 wolves in Minnesota, and those wolves later expanded into Wisconsin and Michigan (USFWS 2020, pp. 20–23). Unlike wolves that are dispersing from the Great Lakes metapopulation, the wolves that are presently found in the West Coast States and the central Rocky Mountains originated primarily from the NRM wolves (USFWS 2020, pp. 3–5). As the delisted NRM population has continued to expand under State management, those wolves have moved into California, Oregon, and Washington, and most recently into Colorado. Those wolves are not connected biologically to the core populations in the 44-State entity, and are not biologically ''significant'' to this entity.

We acknowledge that both the West Coast States and central Rocky Mountains portions of the 44-State entity may be at greater risk from human-caused mortality or from factors related to small numbers of individuals. However, wolves in these portions are not meaningful to the redundancy or resiliency of the 44-State entity because they occur in small numbers and include relatively few breeding pairs. There are seven known breeding pairs in the West Coast States, and a single group of six known individuals in Colorado. Because these wolves represent the expanding edge of a recovered and stable source population (the NRM DPS), and are therefore not an independent population within the 44-State entity, the relatively small number of wolves there do not contribute meaningfully to the ability of any population to withstand stochastic events, nor to the entire entity's ability to withstand catastrophic events. These portions are also not meaningful in terms of representation, because (1) gray wolves are a highly adaptable generalist carnivore capable of long-distance dispersal, and (2) the gray wolves in this area are an extension of a large population of wolves in the northern Rocky Mountains. They are not an isolated population with unique or markedly different genotypic or phenotypic traits that is evolving separate from other wolf populations. They are also well-represented in the lower 48 United States as a result of recovery in the NRM DPS. Therefore, we do not find that this portion may be significant, under any reasonable definition of ''significant,'' to the 44-State entity in terms of its resiliency, redundancy, or representation.

We conclude that there are no portions of the 44-State entity for which both (1) gray wolves may be in danger of extinction or likely to become so in the foreseeable future and (2) the portion may be significant. As discussed above, portions that may be in danger of extinction or likely to become so in the foreseeable future are not significant under any reasonable definition of that term. Conversely, other portions that are or may be significant (*i.e.,* the core areas of the Wisconsin-Michigan population) are not in danger of extinction or likely to become so in the foreseeable future. Because we did not identify any portions of the 44-State entity where threats may be concentrated and where the portion may be biologically meaningful in terms of the resiliency, redundancy, or representation of the 44-State entity, a more thorough analysis is not required. Therefore, we conclude that the 44-State entity is not in danger of extinction or likely to become so in the foreseeable future within a significant portion of its range.

44-State Entity: Final Determination

After a thorough review of all available information and an evaluation of the five factors specified in section 4(a)(1) of the Act, as well as consideration of the definitions of ''threatened species'' and ''endangered species'' contained in the Act and the reasons for delisting as specified at 50 CFR 424.11(e), we conclude that removing the 44-State entity of the gray wolf (*Canis lupus*) from the List of Endangered and Threatened Wildlife (50 CFR 17.11) is appropriate. Although this entity is not a species as defined under the Act, we have collectively evaluated the current and potential threats to gray wolves in the 44-State entity, including those that result from past loss of historical range. Wolves in the 44-State entity do not meet the definition of a threatened species or an endangered species as a result of the reduction of threats as described in the analysis of threats and are neither currently in danger of extinction, nor likely to become so in the foreseeable future, throughout all or a significant portion of their range.

Although substantial contraction of gray wolf historical range occurred within the 44-State entity since European settlement, the range of the gray wolf has expanded significantly since its original listing in 1978, and the

impacts of lost historical range are no longer manifesting in a way that threatens the viability of the species. The causes of the previous contraction (for example, targeted extermination efforts), and the effects of that contraction (for example, reduced numbers of individuals and populations, and restricted gene flow), in addition to the effects of all other threats, have been ameliorated or reduced such that the 44-State entity no longer meets the Act's definitions of ''threatened species'' or ''endangered species.''

Combined Listed Entity

Combined Listed Entity: Determination of Status Throughout All of Its Range

We have determined that Minnesota and the 44-State entity are each not an endangered species or a threatened species. Therefore, no entity which includes any of those components can be in danger of extinction or likely to become so in the foreseeable future throughout all of its range because we have already conclude that it is not threatened or endangered throughout some of its range. Nonetheless, below we independently analyze whether the combined listed entity is in danger of extinction or likely to become so throughout all of its range. Then we turn to the question, not already resolved, of whether that entity is in danger of extinction or likely to become so in a significant portion of its range.

Prior to listing in the 1970s, wolves in the combined listed entity had been reduced to about 1,000 individuals and extirpated from all of their range except northeastern Minnesota and Isle Royale, Michigan. The primary cause of the decline of wolves in the combined listed entity was targeted elimination by humans. However, gray wolves are highly adaptable; their populations are remarkably resilient as long as prey availability, habitat, and regulation of human-caused mortality are adequate. Wolf populations can rapidly overcome severe disruptions, such as pervasive human-caused mortality or disease, once those disruptions are removed or reduced.

With the protections of the Act, the size of the gray wolf population increased to over four times that at the time of the initial gray wolf listings in the early 1970s, and more than triple that at the time of the 1978 reclassification (a figure which does not include the wolves currently found in the northern Rocky Mountains, which was part of those earlier listings, although not now part of the current combined listed entity). The range has expanded outside of northeastern Minnesota to central and northwestern Minnesota, northern and central Wisconsin, and the entire Upper Peninsula of Michigan, and is in the early stages of expanding into western Washington, western Oregon, northern California, and Colorado. Wolves in the combined listed entity now primarily exist as a large, stable to growing, metapopulation of about 4,200 individuals in the Great Lakes area and a small number of colonizing wolves in the West Coast States and Colorado that represent the expanding edge of a large metapopulation outside the combined listed entity (in the northern Rocky Mountains and western Canada and, more recently the central Rocky Mountains (figure 2)). We focus our analysis where wolves occur.

The recovery criteria for wolves in the Eastern United States, as outlined in the Eastern Timber Wolf Recovery Plan and Revised Recovery Plan, includes the maintenance of the Minnesota population and reestablishment of at least one viable wolf population within the historical range of the eastern timber wolf outside of Minnesota and Isle Royale, Michigan (see *Recovery Criteria for the Eastern United States*). The viable population outside of Minnesota has been reestablished in Wisconsin and Michigan.

Within the combined listed entity, the wolf metapopulation in the Great Lakes area is stable to slightly increasing, currently numbers at least 4,231 wolves (2,655 in Minnesota, 914 in Wisconsin, and 695 in Michigan) (USFWS 2020, pp. 21–24 and Appendix 1), is broadly distributed throughout high-quality habitat in the northern portions of the three States (see Great Lakes Area Suitable Habitat—MN, WI and MI discussions), and contains high levels of genetic diversity (see *Genetic Diversity and Inbreeding*). Further, the high reproductive potential of gray wolves (USFWS 2020, p. 8) enables them to withstand increased levels of mortality, their ability to disperse long distances allows them to quickly expand and recolonize vacant habitats (USFWS 2020, p. 7), and the fact that they are highly adaptable animals enables them to inhabit and survive in a variety of habitats and take advantage of available food resources (USFWS 2020, p. 6).

The wolf metapopulation in the Great Lakes area is highly resilient to perturbations because of its abundance and broad distribution across high-quality habitat in the Great Lakes area. Biological factors also play an important part in the resiliency of wolves in the Great Lakes area, namely their high reproductive capacity and genetic diversity. Those factors provide resiliency in the face of stochastic variability (annual environmental fluctuations, periodic disturbances, and impacts of anthropogenic stressors). Life-history characteristics of the wolf, including high dispersal capability and adaptability, along with the high genetic diversity evident in wolves in the Great Lakes area, provides sufficient adaptive capacity such that their long-term survival is assured. Additionally, catastrophic events have not affected wolf populations at a multi-State scale in the Great Lakes area, and we found no indication that these events would impact the long-term survival of wolves throughout the Great Lakes area in the future.

Thus, the metapopulation of wolves in the Great Lakes area and, consequently, the combined listed entity, contain sufficient resiliency, redundancy, and representation to sustain populations within the combined listed entity over time. Therefore, we conclude that the relatively few wolves that occur within the combined listed entity outside of the Great Lakes area, including those in the West Coast States and central Rocky Mountains as well as lone dispersers in other States, are not necessary for the recovered status of the combined listed entity. However, the viability of the entity is enhanced even further by wolves that occur outside of the Great Lakes area and also by those that occur outside the combined listed entity. First, the viability of the combined listed entity is increased even further via connectivity of the entity to populations in Canada. Connection of the metapopulation of wolves in the Great Lakes area to a population of about 12,000–14,000 wolves in eastern Canada further increases the resiliency and representation (via gene flow) of wolves in the Great Lakes area, increasing the viability of the combined listed entity. Second, wolves from the northern Rocky Mountains and western Canada are expanding into the combined listed entity in Oregon, Washington, California, and Colorado (figure 2). With ongoing State management in the NRM DPS, further expansion of wolves into the combined listed entity is likely to continue in the West Coast States and possibly the central Rocky Mountains. Although wolves in these areas would add to resiliency, redundancy, and representation, they are not necessary in order to conserve wolves to the point that they no longer meet the definitions of endangered or threatened under the Act. Furthermore, although having wolves in unoccupied areas could also

contribute to resiliency, redundancy, and representation, they are not necessary in order to conserve wolves to the point that they no longer meet the definitions of endangered or threatened under the Act.

The recovery of the combined listed entity is attributable primarily to successful interagency cooperation in the management of human-caused mortality. That mortality is the most significant barrier to the long-term conservation of wolves. Therefore, this source of mortality remains the primary challenge in managing the wolf population to maintain its recovered status into the foreseeable future. Legal harvest and agency control to mitigate depredations on livestock are the primary human-caused mortality factors that management agencies can manipulate to achieve management objectives and minimize depredation risk associated with repeated conflicts, respectively, once delisting occurs. Wolves in the Great Lakes area greatly exceed the Federal recovery requirements defined in the revised recovery plan. As a result, we can expect to see some reduction in wolf populations in the Great Lakes areas as States begin to institute management strategies (such as increased depredation control and wolf-hunting seasons) with the objective of stabilizing or reversing population growth while continuing to maintain wolf populations well above Federal recovery requirements. Using an adaptive-management approach that adjusts harvest based on population estimates and trends, the initial objectives may be to reduce wolf populations and then manage for sustainable populations, similar to how States manage all other game species. For example, in 2013–2014, during a period when gray wolves were federally delisted in the Great Lakes area, Wisconsin reduced the State's wolf harvest quota by 43 percent in response to a reduced (compared to the previous year) estimated size of the wolf population. We expect Washington, Oregon, and California will manage wolves through appropriate laws and regulations to ensure that the recovery objectives outlined in their respective wolf management plans are achieved.

Based on our analysis, we conclude that Minnesota, Wisconsin, and Michigan will maintain an abundant and well-distributed metapopulation in the Great Lakes area that will remain above recovery levels for the foreseeable future, and that the threat of human-caused mortality has been sufficiently reduced. All three States have wolf-management laws, plans, and regulations that adequately regulate human-caused mortality. Each of the three States has committed to manage its wolf population at or above viable population levels, and we do not expect this commitment to change. Adequate wolf-monitoring programs, as described in the State wolf-management plans, are likely to identify high mortality rates or low birth rates that warrant corrective action by the management agencies. Based on our review, we conclude that regulatory mechanisms in all three States are adequate to maintain the recovered status of wolves in the combined listed entity once they are federally delisted. Further, while relatively few wolves occur in the west coast portion of the combined listed entity at this time, and State wolf-management plans for Washington, Oregon, and California do not yet include population management goals, these plans include recovery objectives intended to ensure the reestablishment of self-sustaining populations in these States. In addition, we expect the wolf metapopulation in the western U.S. and western Canada to continue to expand into unoccupied suitable habitats in the Western United States, as envisioned in State wolf conservation and management plans.

Based on the biology of wolves and our analysis of threats, we conclude that, as long as wolf populations in the Great Lakes States are maintained at or above identified recovery levels, wolf biology (namely the species' reproductive capacity) and the availability of large, secure blocks of suitable habitat within the occupied areas will enable the maintenance of populations capable of withstanding all other foreseeable threats. Although much of the historical range of the combined listed entity is no longer occupied, we find that the amount and distribution of occupied wolf habitat currently provides, and will continue to provide into the foreseeable future, large core areas that contain high-quality habitat of sufficient size and with sufficient prey to support a recovered wolf population. Our analysis of land management shows these areas, specifically Minnesota Wolf Management Zone A (Federal Wolf Management Zones 1–4), Wisconsin Wolf Zone 1, and the Upper Peninsula of Michigan, will maintain their suitability into the foreseeable future. Therefore, we conclude that, despite the loss of large areas of historical range for the combined listed entity, Minnesota, Wisconsin, and the Upper Peninsula of Michigan contain a sufficient amount of high-quality wolf habitat to support wolf populations into the future.

While disease and parasites can temporarily affect individuals, specific packs, or small, isolated populations (*e.g.,* Isle Royale), seldom do they pose a significant threat to large wolf populations (*e.g.,* core populations in the NRM DPS and Great Lakes area) as a whole. As long as wolf populations are managed above recovery levels, these factors are not likely to threaten the viability of the wolf population in the combined listed entity at any point in the foreseeable future. Climate change is also likely to remain an insignificant factor affecting the population dynamics of wolves into the foreseeable future, due to the adaptability of the species. Finally, based on our analysis, we conclude that cumulative effects of threats do not now, and are not likely to within the foreseeable future, threaten the viability of the combined listed entity throughout the range of wolves in the combined listed entity.

We have carefully assessed the best scientific and commercial information available regarding the past, present, and future threats to the combined listed entity. We evaluated the status of the combined listed entity and assessed the factors likely to negatively affect it, including threats identified at listing, at the time of reclassification, now, and into the foreseeable future. While wolves in the combined listed entity currently occupy only a portion of wolf historical range, the best available information indicates that the combined listed entity is recovered and does not meet the definition of an endangered species or a threatened species because of any one or a combination of the five factors set forth in the Act.

Specifically, we have determined, based on the best available information, that human-caused mortality (Factor C); habitat and prey availability (Factor A); disease and parasites (Factor C); genetic diversity and inbreeding (Factor E); commercial, recreational, scientific, or educational uses (Factor B); climate change (Factor E); or other threats, singly or in combination, are not of sufficient imminence, intensity, or magnitude to indicate that the combined listed entity is in danger of extinction or likely to become so within the foreseeable future throughout all of its range. We have also determined that ongoing effects of recovery efforts, which resulted in a significant expansion of the occupied range of and number of wolves in the combined listed entity over the past decades, in conjunction with State, Tribal, and Federal agency wolf management and regulatory mechanisms that will be in

place following delisting of the entity across its occupied range, will be adequate to ensure the conservation of wolves in the combined listed entity. These activities will maintain an adequate prey base, preserve denning and rendezvous sites, monitor disease, restrict human take, and keep wolf populations well above the recovery criteria established in the revised recovery plan (USFWS 1992, pp. 25–28).

We have identified the best available scientific studies and information assessing human-caused mortality; habitat and prey availability; the impacts of disease and parasites; commercial, recreational, scientific, or educational uses; gray wolf adaptability, including with respect to changing climate; recovery activities and regulatory mechanisms that will be in place following delisting; and predictions about how these may affect the combined listed entity in making determinations about the combined listed entity's future status, and we conclude that it is reasonable to rely on these sources. Therefore, after assessing the best available information, despite the large amount of lost historical range (see Historical Context of Our Analysis), we have determined that the combined listed entity is not in danger of extinction throughout all of its range, nor is it likely to become so in the foreseeable future.

Because we determined that the combined listed entity is not in danger of extinction or likely to become so in the foreseeable future throughout all of its range, we will consider whether there are any significant portions of its range that are in danger of extinction or likely to become so in the foreseeable future.

Combined Listed Entity: Determination of Status Throughout a Significant Portion of Its Range

After reviewing the biology of the combined listed entity and potential threats, we have not identified any portions of the combined listed entity for which both (1) gray wolves may be in danger of extinction or likely to become so in the foreseeable future (*i.e.,* areas in which threats may be concentrated) and (2) the portion may be significant. We reiterate that ''range'' refers to the general geographical area within which the species is found at the time of our determination (see *Definition and Treatment of Range*). ''Portion of its range'' refers to the members of the species that occur in a particular geographic area of the species' current range. This is because, while ''portion of the range'' is part of the species' range (*i.e.,* a geographical area), when we evaluate a significant portion of its range, we consider the contribution of the individuals that are in that portion at the time we make a determination. While we identified some portions that may be at increased risk from human-caused mortality or factors related to small numbers, we did not find that any of these portions may be significant. We provide our analysis below.

First, portions peripheral to the Great Lakes metapopulation that may frequently contain lone dispersing wolves (*e.g.,* Lower Peninsula of Michigan, eastern North and South Dakota) or may contain few wolves (*e.g.,* Isle Royale) may be at greater risk from human-caused mortality or from factors related to small numbers of individuals. However, wolves in these portions are not meaningful to resiliency or redundancy of the combined listed entity because they are lone dispersers from core wolf range or few or no breeding pairs or are few in number and likely to remain so (*e.g.,* Isle Royale). They are not contributing to representation of the combined listed entity because they dispersed or descend from the core wolf populations in the Great Lakes metapopulation or, in the case of Isle Royale, are genetically isolated and therefore have a low probability of long-term genetic health. Thus, these portions do not contribute to the overall demographic or genetic diversity of the lower 48 United States entity and they lack genetic uniqueness relative to other wolves in the entity. Further, gray wolves are a highly adaptable species with high dispersal capability, thus allowing them to adapt to changing environmental conditions. Therefore, we find that these portions are not ''significant'' because they are not biologically meaningful to the combined listed entity in terms of its resiliency, redundancy, or representation.

Second, State wolf-management zones in which post-delisting depredation control would be allowed under a broader set of circumstances than in core population zones (and, thus, would likely experience higher levels of human-caused mortality upon the combined listed entity's delisting), such as Minnesota Wolf Management Zone B (Federal Wolf Management Zone 5) or Wisconsin Wolf Management Zones 3 and 4 may be at greater risk from human-caused mortality or from factors related to small numbers of individuals. However, the wolves in these portions occur on the periphery of a large metapopulation (the Great Lakes metapopulation), occur in areas of limited habitat suitability, and do not contribute appreciably to (and are thus not biologically meaningful to) the resiliency, redundancy, or representation of the combined listed entity. In fact, the Revised Recovery Plan for the Eastern Timber Wolf advises against restoration of wolves in State Zone B (Federal Zone 5).

Wolves in these higher intensity management zones are not meaningful to the resiliency of the combined listed entity because, even though they contain multiple established packs in addition to lone wolves, they constitute a small proportion of wolves in the Great Lakes metapopulation and, consequently, the combined listed entity (Zone B contains approximately 15 percent of the Minnesota wolf population; Zones 3 and 4 contain about 6 percent of the Wisconsin wolf population). Thus, wolves in these higher intensity management zones do not contribute meaningfully to the ability of wolves in the combined listed entity to withstand stochastic processes.

Likewise, these higher intensity management zones are not meaningful to the redundancy of the combined listed entity because wolves in these zones represent a relatively small number and distribution of packs in their respective States and catastrophic events have not affected wolf populations at a multi-State scale in the Great Lakes area, and we found no indication that these events would impact the long-term survival of wolves throughout these States in the future. Thus, wolves in these higher intensity management zones do not contribute meaningfully to the ability of wolf populations in these States, the Great Lakes metapopulation, or, consequently, the combined listed entity, to withstand catastrophic events. Wolves in these higher intensity management zones are not meaningful to the representation of the combined listed entity because they are genetically similar to other wolves in the Great Lakes area of the combined listed entity and because gray wolves are a highly adaptable species with high dispersal capability, thus allowing them to adapt to changing environmental conditions. Therefore, we do not find that these portions may be significant because they are not biologically meaningful to the combined listed entity in terms of its resiliency, redundancy, or representation.

Third, the small number of wolves occurring in the West Coast States and the central Rocky Mountains are not a significant portion of the combined listed entity. Our evaluation of whether any portions of the range may be ''significant'' is a biological inquiry. We

consider whether any portions are biologically meaningful in terms of the resiliency, redundancy, or representation of gray wolves in the combined listed entity. When the gray wolf was listed in 1978, there were about 1,200 wolves in Minnesota, and those wolves later expanded into Wisconsin and Michigan (USFWS 2020, pp. 20–23). Unlike wolves that are dispersing from the Great Lakes metapopulation, the wolves that are presently found in the West Coast States and the central Rocky Mountains originated primarily from the NRM wolves (USFWS 2020, pp. 3–5). As the delisted NRM population has continued to expand under State management, those wolves have moved into California, Oregon, and Washington, and most recently into Colorado. Those wolves are not connected biologically to the core populations in the combined listed entity, and are not biologically ''significant'' to this entity.

We acknowledge that both the West Coast States and central Rocky Mountain portions of the combined listed entity may be at greater risk from human-caused mortality or from factors related to small numbers of individuals. However, wolves in these portions are not meaningful to the redundancy or resiliency of the combined listed entity because they occur in extremely small numbers and include relatively few breeding pairs. There are seven known breeding pairs in the West Coast States, and a single group of six known individuals in Colorado. Because these wolves represent the expanding edge of a recovered and stable source population (the NRM DPS), and are therefore not an independent population within the combined listed entity, the relatively small number of wolves there do not contribute meaningfully to the ability of any population to withstand stochastic events, nor to the entire entity's ability to withstand catastrophic events. These portions are also not meaningful in terms of representation, because (1) gray wolves are a highly adaptable generalist carnivore capable of long-distance dispersal, and (2) the gray wolves in this area are an extension of a large population of wolves in the northern Rocky Mountains. They are not an isolated population with unique or markedly different genotypic or phenotypic traits that is evolving separate from other wolf populations. They are also well-represented in the lower 48 United States as a result of recovery in the NRM DPS. Therefore, we do not find that this portion may be significant to the combined listed entity in terms of its resiliency, redundancy, or representation.

We conclude that there are no portions of the combined listed entity for which both (1) gray wolves may be in danger of extinction or likely to become so in the foreseeable future and (2) the portion may be significant. As discussed above, some may be in danger of extinction or likely to become so in the foreseeable future, but we do not find that these portions may be significant under any reasonable definition of that term because they are not biologically meaningful to the combined listed entity in terms of its resiliency, redundancy, or representation. Conversely, other portions that are or may be significant (*i.e.,* the core areas of the Great Lakes metapopulation) are not in danger of extinction or likely to become so in the foreseeable future. Because we could not answer both screening questions in the affirmative for these portions, we conclude that these portions of the range do not warrant further consideration as a significant portion of its range. Therefore, we conclude that the combined listed entity is not in danger of extinction or likely to become so in the foreseeable future within a significant portion of its range.

Combined Listed Entity: Final Determination

After a thorough review of all available information and an evaluation of the five factors specified in section 4(a)(1) of the Act, as well as consideration of the definitions of ''threatened species'' and ''endangered species'' contained in the Act and the reasons for delisting as specified at 50 CFR 424.11(e), we conclude that removing the two currently listed entities of gray wolf (*Canis lupus*) from the List of Endangered and Threatened Wildlife (50 CFR 17.11) is appropriate. Although this entity is not a species as defined under the Act, we have collectively evaluated the current and potential threats to the combined listed entity, including those that result from past loss of historical range. Wolves in the combined listed entity do not meet the definition of a threatened species or an endangered species as a result of the reduction of threats as described in the analysis of threats and are neither currently in danger of extinction, nor likely to become so in the foreseeable future, throughout all or a significant portion of their range.

Although substantial contraction of gray wolf historical range occurred within the combined listed entity since European settlement, the range of the gray wolf has expanded significantly since its original listing in 1978, and the impacts of lost historical range are no longer manifesting in a way that threatens the viability of the species. The causes of the previous contraction (for example, targeted extermination efforts), and the effects of that contraction (for example, reduced numbers of individuals and populations, and restricted gene flow), in addition to the effects of all other threats, have been ameliorated or reduced such that the combined listed entity does not meet the Act's definitions of ''threatened species'' or ''endangered species.''

Lower 48 United States Entity

Lower 48 United States Entity: Determination of Status Throughout All of Its Range

We have determined that Minnesota, the 44-State entity, and the combined listed entity are each not an endangered species or a threatened species. Therefore, no entity which includes any of those components can be in danger of extinction or likely to become so in the foreseeable future throughout all of its range because we have already conclude that it is not threatened or endangered throughout some of its range. Nonetheless, below we independently analyze whether the lower 48 United States entity is in danger of extinction or likely to become so throughout all of its range. Then we turn to the question, not already resolved, of whether that entity is in danger of extinction or likely to become so in a significant portion of its range.

At the time gray wolves were first listed under the Act in the 1970s, wolves in the lower 48 United States had been reduced to about 1,000 individuals and extirpated from all of their range except northeastern Minnesota and Isle Royale, Michigan, a small fraction of the species' historical range in the lower 48 United States. The primary cause of the decline of wolves in the lower 48 United States was targeted elimination by humans. However, gray wolves are highly adaptable; their populations are remarkably resilient as long as prey availability, habitat, and regulation of human-caused mortality are adequate. Established wolf populations can rapidly overcome severe disruptions, such as pervasive human-caused mortality or disease, once those disruptions are removed or reduced.

Provided the protections of the Act, the number of gray wolves in the lower 48 United States (greater than 6,000 wolves) has increased more than sixfold since the initial listings and about

fivefold since the 1978 reclassification. The range of the species has expanded from northeast Minnesota and Isle Royale, Michigan, to include central and northwestern Minnesota, the entire Upper Peninsula of Michigan, and northern and central Wisconsin in the Eastern United States. In addition, wolves in the Western United States were functionally extinct at the time of listing, but now viable populations occupy large portions of Idaho, Montana, Wyoming, eastern Washington, and eastern Oregon in the Western United States. They are also currently expanding from the NRM region into the West Coast States (western Washington, western Oregon, northern California), and Colorado.

Despite the substantial increase in gray wolf numbers and distribution within the lower 48 United States since 1978, the species currently occupies only a small portion of its historical range within this area. This loss of historical range has resulted in a reduction of gray wolf individuals, populations, and suitable habitat within the lower 48 United States compared to historical levels. Changes resulting from range contraction for the lower 48 United States have increased the vulnerability of the lower 48 United States entity to threats such as reduced genetic diversity and restricted gene flow (reduced representation), catastrophic events (reduced redundancy), or stochastic disturbances (reduced resiliency), such as annual environmental fluctuations (prey availability, pockets of disease outbreaks) and anthropogenic stressors.

Wolves in the lower 48 United States now exist primarily as two large, genetically diverse, stable to growing metapopulations, one currently numbering over 4,200 individuals in the Eastern United States (in the Great Lakes area) and another numbering about 1,900 individuals in 2015 in the Western United States (in the NRM and West Coast States) (figure 3). The current number of individuals in the western U. S. metapopulation is similar to that in 2015, and this metapopulation is currently recolonizing western Washington, western Oregon, northern California, and Colorado. Gray wolf metapopulations—populations that are connected to and interact with other populations of the same species—are widely recognized as being more secure over the long term than are several isolated populations that contain the same total number of packs and individuals (USFWS 1994, appendix 9). This outcome is because adverse effects experienced by one of its subpopulations resulting from genetic drift, demographic shifts, and local environmental fluctuations can be countered by occasional influxes of individuals and their genetic diversity from other subpopulations in the metapopulation. Furthermore, the high reproductive potential of gray wolves (USFWS 2020, p. 8) enables them to withstand increased levels of mortality and their ability to disperse long distances allows them to quickly expand and recolonize vacant habitats (USFWS 2020, p. 7). Gray wolves are also able to inhabit and survive in a variety of habitats and take advantage of available food resources (USFWS 2020, p. 6).

Gray wolves in the lower 48 United States entity are highly resilient to perturbations because of their abundance and broad distribution across high-quality habitat in the entity. Biological factors also play an important part in the resiliency of wolves in the entity, namely their high reproductive capacity and genetic diversity. The large sizes of the two metapopulations in the entity, the high quality of the habitat they occupy, and those biological factors provide the entity resiliency in the face of stochastic (random) variability (annual environmental fluctuations in, for example, prey availability, pockets of disease outbreaks; periodic disturbances, and anthropogenic stressors). Further, the two metapopulations and their broad distribution across several States provides the entity the redundancy to survive a catastrophic event because such an event is unlikely to simultaneously affect gray wolf populations in all the States across which these metapopulations are distributed. Lastly, the gray wolf is a highly adaptable species that can inhabit a variety of ecosystem types and exploit available food resources in a diversity of areas. Genetic, general size, habitat, and dietary differences between gray wolves currently found in the Eastern United States (Great Lakes area) and Western United States (NRM and West Coast States) provide the entity additional adaptive capacity. Thus, the lower 48 United States entity contains sufficient capacity to adapt to future changes in the environment such that their long-term survival is assured. In sum, wolves in the Eastern and Western United States contain sufficient resiliency, redundancy, and representation to sustain populations in the lower 48 United States entity over time. This alone is sufficient for us to determine that the lower 48 United States entity is not currently in danger of extinction throughout all of its range.

While the lower 48 United States entity contains sufficient resiliency, redundancy, and representation to sustain the entity over time, the viability of the entity is increased even further via connectivity of the entity to populations in Canada. Connection of the Great Lakes metapopulation and western U.S. metapopulation to a population of about 12,000–14,000 wolves in eastern Canada and 15,000 gray wolves in western Canada, respectively, further increases the resiliency, and representation (via gene flow), of the Great Lakes and western U.S. metapopulations, increasing the viability of the entity. Further, with ongoing State management in the NRM States, expansion of the western U. S. metapopulation into unoccupied suitable habitat in the West is likely to continue, as envisioned in State wolf conservation and management plans, further increasing the resiliency and redundancy of the lower 48 United States entity in the future.

Our conclusion that the lower 48 United States entity is not currently in danger of extinction in all of its range is consistent with our historical view of the recovery of the species. We have long considered gray wolf recovery in the lower 48 states to mean recovery in three regions: The NRM, Eastern United States, and, as explained above, Southwestern United States. Wolves in the Southwestern United States (Mexican wolves) are listed separately with ongoing recovery efforts, and that listing is not affected by this final rule. Wolves in the remaining two regions, the NRM and Eastern United States, exist in two metapopulations that greatly exceed the recovery criteria for gray wolves in each region. Gray wolves in the NRM and Eastern United States (the Great Lakes area) meet the long-held recovery criteria set by the NRM Recovery Team and Eastern Timber Wolf Recovery Team (respectively) because these areas contain sufficient wolf numbers and distribution, threats have been alleviated, and the States and Tribes are committed to continued management such that the long-term survival of the gray wolf in these two regions is ensured. Although there is no requirement that the criteria in a recovery plan be satisfied before a species may be delisted, the fact that wolves in the NRM and Eastern United States regions have met the recovery criteria supports our conclusion that the metapopulations together contain sufficient wolf numbers and distribution to ensure the long-term survival of the lower 48 United States entity.

The recovery of the lower 48 United States entity is attributable primarily to

successful interagency cooperation in the management of human-caused mortality. That mortality is the most significant barrier to the long-term conservation of wolves. We expect that wildlife managers will implement, or continue to use, an adaptive management approach to wolves that ensures maintenance of a recovered wolf population into the foreseeable future. Legal harvest and lethal control to reduce depredations on livestock are the primary human-caused mortality factors that State, Tribal, and Federal agencies can manipulate to achieve management objectives and minimize depredation risk once delisting occurs.

In the Western United States, the NRM States have successfully managed for sustainable wolf populations since the NRM DPS was first delisted in 2008–2009 (Idaho, Montana, eastern one-third of Washington and Oregon, north-central Utah) and 2008 and 2012 (Wyoming). Even with increased levels of human-caused mortality, gray wolf numbers have remained relatively stable in Idaho, Montana, and Wyoming since the delisting of the NRM DPS and have increased in the broader Western United States as NRM wolves have expanded their range into the Washington and Oregon part of the NRM DPS, the West Coast States (western Washington, western Oregon, and northern California), and Colorado.

The core NRM wolf populations occur in Idaho, Montana, and Wyoming. These States have demonstrated their commitment to managing their wolf populations at or above recovery levels for years, and we do not expect this commitment to change. Further, while State wolf-management plans for Washington, Oregon, and California do not yet include population management goals, these plans include recovery objectives intended to ensure the reestablishment of self-sustaining populations in these States. We expect Washington, Oregon, and California will manage wolves through appropriate laws and regulations to ensure that the recovery objectives outlined in their respective wolf management plans are achieved.

Wolves in the Eastern United States are well above Federal recovery levels defined in the revised Eastern Timber Wolf Recovery Plan. As a result, we can expect to see some reduction in wolf populations in the Great Lakes area as States begin to institute management strategies designed to stabilize or reverse population growth, while continuing to maintain wolf populations well above Federal recovery levels in their respective States. Using an adaptive-management approach that adjusts harvest based on population estimates and trends, the initial objectives of States may be to reduce wolf populations and then manage for sustainable populations, similar to how States manage all other game species. For example, in 2013–2014, during a period when gray wolves were federally delisted in the Great Lakes area, Wisconsin reduced the State's wolf harvest quota by 43 percent in response to a population count that was lower than expected compared to the previous year.

Based on our analysis, we conclude that eastern U.S. States will maintain, and NRM States will continue to maintain, wolf populations that will remain above recovery levels for the foreseeable future because the threat of unregulated human-caused mortality has been sufficiently reduced. The NRM States have successfully managed gray wolves well above recovery levels for years and we have no reason to believe this will change. As demonstrated by current State management, maintenance of the recovered wolf population in the NRM States is likely to continue, providing ample opportunities for wolves to continue to recolonize vacant suitable habitat in the West. In the Eastern United States, States have wolf-management laws, plans, and regulations that adequately regulate human-caused mortality and each has committed to manage its wolf population at or above recovery levels. We expect this commitment to continue into the foreseeable future. Wolf-monitoring programs, as described in the State wolf-management plans, are likely to identify population parameters and trends that warrant corrective action, and we have no information that would lead us to question the commitment of wildlife management agencies to implementing these adaptive changes to ensure the recovered status of wolves. Based on our review, we conclude that regulatory mechanisms are adequate to maintain the recovered status of wolves in the two metapopulations in the lower 48 United States and, consequently, the lower 48 United States entity, once the currently listed gray wolf entities are federally delisted.

Although much of the historical range of the lower 48 United States is no longer occupied, we find that the amount and distribution of occupied wolf habitat currently provides, and will continue to provide, large core areas that contain high-quality habitat of sufficient size and with sufficient prey to support recovered wolf populations. Our analysis of land management shows these areas, specifically Minnesota Wolf Management Zone A (Federal Wolf Management Zones 1–4), Wisconsin Wolf Zone 1, and the Upper Peninsula of Michigan in the Eastern United States, and large areas of Idaho, Montana, and Wyoming in the Western United States, will maintain their suitability into the foreseeable future. Therefore, we conclude that, despite the loss of large areas of historical range in the lower 48 United States, the States of Minnesota, Michigan, and Wisconsin in the East and Idaho, Montana, and Wyoming, in the West contain a sufficient amount of high-quality wolf habitat to support viable and recovered wolf populations into the foreseeable future. Further, Washington, Oregon, California, Colorado, and Utah contain suitable wolf habitat, much of which is currently unoccupied, that is capable of supporting additional wolves. Expansion of the NRM population into unoccupied suitable habitat in the Western United States is ongoing and is likely to continue post-delisting, which will increase wolf abundance and distribution in the United States. Although wolves in these areas would add additional redundancy, they are not necessary in order to conserve wolves to the point that they no longer meet the definitions of endangered or threatened under the Act.

While disease and parasites can temporarily affect individuals, specific packs, or small, isolated populations (*e.g.,* Isle Royale), seldom do they pose a significant threat to large wolf populations (*e.g.,* core populations in the western United States and Great Lakes area) as a whole. As long as wolf populations are managed above recovery levels, these factors are not likely to threaten the viability of the wolf population in the lower 48 United States entity at any point in the foreseeable future. Similarly, while changes in genetic diversity or population structuring may occur post-delisting, they are not likely to be of such a magnitude that they pose a significant threat to the entity; available evidence indicates that continued dispersal, even at a lower rate, within and among areas of the lower 48 United States will be adequate to maintain sufficient genetic diversity for continued viability. Climate change is also likely to remain an insignificant factor affecting the population dynamics of wolves into the foreseeable future, due to the adaptability of the species. Finally, based on our analysis, we conclude that cumulative effects of threats do not now, nor are likely to within the foreseeable future, threaten

the viability of the lower 48 United States entity throughout its range.

We have carefully assessed the best scientific and commercial information available regarding the past, present, and future threats to the lower 48 United States. We evaluated the status of the lower 48 United States entity and assessed the factors likely to negatively affect it, including threats identified at listing, at the time of reclassification, now, and into the foreseeable future. While wolves currently occupy only a portion of their historical range in the lower 48 United States, the best available information indicates that the lower 48 United States entity does not meet the definition of an endangered species or a threatened species because of any one or a combination of the five factors set forth in the Act.

Specifically, we have determined, based on the best available information, that human-caused mortality (Factor C); habitat and prey availability (Factor A); disease and parasites (Factor C); genetic diversity and inbreeding (Factor E); commercial, recreational, scientific, or educational uses (Factor B); climate change (Factor E); or other threats, singly or in combination, are not of sufficient imminence, intensity, or magnitude to indicate that the lower 48 United States entity is in danger of extinction or likely to become so within the foreseeable future throughout all of its range. We have also determined that ongoing recovery efforts, which resulted in a significant expansion of the occupied range of and number of wolves in the lower 48 United States over the past decades, in conjunction with regulatory mechanisms developed and implemented by State, Tribal, and Federal managers, are or will be adequate to ensure the conservation of wolves in the lower 48 United States. These recovery efforts will maintain an adequate prey base, preserve denning and rendezvous sites, monitor disease, regulate human take, and maintain wolf populations well above the recovery criteria established in the revised Eastern Timber Wolf Recovery Plan and NRM recovery plan (USFWS 1992, pp. 25–28; USFWS 1987, p. 12). Based on our analysis of threats we conclude that, as long as wolf populations in the Eastern United States are maintained at or above identified recovery levels and core wolf populations in the NRM States continue to be maintained well above recovery levels, wolf biology (namely the species' reproductive capacity and dispersal capability) and the availability of large, secure blocks of suitable habitat within the occupied areas will allow wolf populations to withstand all other foreseeable threats.

Therefore, after assessing the best available information, despite the large amount of lost historical range (see Historical Context of Our Analysis), we have determined that the lower 48 United States entity is not in danger of extinction throughout all of its range, nor is it likely to become so in the foreseeable future.

Because we determined that the lower 48 United States entity is not in danger of extinction or likely to become so in the foreseeable future throughout all of its range, we will consider whether there are any significant portions of its range that are in danger of extinction or likely to become so in the foreseeable future.

Lower 48 United States Entity: Determination of Status Throughout a Significant Portion of Its Range

After reviewing the biology of the lower 48 United States entity and potential threats, we have not identified any portions of the entity's range for which both (1) gray wolves may be in danger of extinction or likely to become so in the foreseeable future (*i.e.,* areas in which threats may be concentrated) and (2) the portion may be significant. We reiterate that ''range'' refers to the general geographical area within which the species is found at the time of our determination (see *Definition and Treatment of Range*). ''Portion of its range'' refers to the members of the species that occur in a particular geographic area of the species' current range. This is because, while ''portion of the range'' is part of the species' range (*i.e.,* a geographical area), when we evaluate a significant portion of its range, we consider the contribution of the individuals that are in that portion at the time we make a determination. While we identified some portions that may be at increased risk from human-caused mortality or factors related to small numbers, we did not find that any of these portions may be significant. We provide our analysis below.

First, portions peripheral to the Great Lakes metapopulation within the lower 48 United States that may frequently contain lone dispersing wolves (*e.g.,* the Lower Peninsula of Michigan, North and South Dakota) or contain relatively few wolves (*e.g.,* Isle Royale) may be at greater risk from human-caused mortality or from factors related to small numbers of individuals. However, wolves in these portions are not meaningful to resiliency or redundancy because they contain few wolves, or few or no breeding pairs. They are not contributing to representation because they dispersed or descend from the core wolf populations in the Great Lakes metapopulation or, in the case of Isle Royale, are genetically isolated. Thus, these portions do not contribute to the overall demographic or genetic diversity of the lower 48 United States entity, and they lack genetic uniqueness relative to other wolves in the entity. Further, gray wolves are a highly adaptable species with high dispersal capability, thus allowing them to adapt to changing environmental conditions. Therefore, we do not find that these portions may be ''significant'' because they are not biologically meaningful to the lower 48 United States entity in terms of its resiliency, redundancy, or representation.

Second, portions peripheral to the western United Sates metapopulation within the lower 48 United States entity that may frequently contain lone dispersing wolves or contain relatively few wolves (*e.g.,* central Rocky Mountains, western Washington, western Oregon, northern California) may be at greater risk from human-caused mortality or from factors related to small numbers of individuals. However, wolves in these portions are not meaningful to resiliency or redundancy because they contain few wolves, or few or no breeding pairs. They are not contributing to representation because they dispersed or descend from the core wolf populations in the NRM. Thus, these portions do not contribute to the overall demographic or genetic diversity of the lower 48 United States entity and they lack genetic uniqueness relative to other wolves in the entity. Further, gray wolves are a highly adaptable species with high dispersal capability, thus allowing them to adapt to changing environmental conditions. Therefore, we do not find that these portions may be ''significant'' because they are not biologically meaningful to the lower 48 United States entity in terms of its resiliency, redundancy, or representation.

Third, State wolf-management zones in which post-delisting depredation control would be, or is, allowed under a broader set of circumstances than in core population zones (and, thus, would likely experience higher levels of human-caused mortality when the currently listed *C. lupus* entities are delisted), such as Minnesota Wolf Management Zone B, Wisconsin Wolf Management Zones 3 and 4, and areas of Wyoming in which wolves are managed as predators, may be at greater risk from human-caused mortality or from factors related to small numbers of individuals. However, the wolves in these portions occur on the periphery of large populations, occur in areas of

limited habitat suitability, and do not contribute appreciably to (and are thus not biologically meaningful to) the resiliency, redundancy, or representation of the lower 48 United States entity.

Wolves in these higher intensity management zones are not meaningful to the resiliency of the lower 48 United States entity because, even though they may contain multiple established packs in addition to lone wolves, they constitute a small proportion of wolves in their respective populations and, consequently, the lower 48 United States entity (Minnesota Zone B contains about 15 percent of the Minnesota wolf population, Wisconsin Zones 3 and 4 contain about 6 percent of the Wisconsin wolf population, and the Wyoming predator zone contains about 8 percent of the Wyoming wolf population (based on an estimated population of 26 wolves in this zone in 2019)). Thus, wolves in the higher intensity management zones do not contribute meaningfully to the ability of wolves in the lower 48 United States entity to withstand stochastic processes.

Likewise, these higher intensity management zones are not meaningful to the redundancy of the lower 48 United States entity because wolves in these zones represent a relatively small number and distribution of packs or individuals in their respective States, and we found no indication that catastrophic events are likely to occur at a scale that would impact the long-term survival of wolves throughout these States. Thus, wolves in these higher intensity management zones do not contribute meaningfully to the ability of wolf populations in these States, the two metapopulations, or, consequently, the lower 48 United States entity, to withstand catastrophic events. Wolves in these higher intensity management zones are not meaningful to the representation of the lower 48 United States entity because they are genetically similar to other wolves in the western U.S. or Great Lakes metapopulation and because gray wolves are a highly adaptable species with high dispersal capability, thus allowing them to adapt to changing environmental conditions. Therefore, we do not find that these portions may be significant because they are not biologically meaningful to the lower 48 United States entity in terms of its resiliency, redundancy, or representation.

We conclude that there are no portions of the lower 48 United States entity for which both (1) gray wolves may be in danger of extinction or likely to become so in the foreseeable future and (2) the portion may be significant. As discussed above, some may be in danger of extinction or likely to become so in the foreseeable future, but we do not find that these portions may be significant under any reasonable definition of that term because they are not biologically meaningful to the lower 48 United States entity in terms of its resiliency, redundancy, or representation. Conversely, other portions that are or may be significant (*i.e.,* the core areas of the Great Lakes and western U.S. metapopulations) are not in danger of extinction or likely to become so in the foreseeable future. Therefore, because we could not answer both screening questions in the affirmative for these portions, we conclude that these portions of the range do not warrant further consideration as a significant portion of its range. Therefore, we conclude that the lower 48 United States entity is not in danger of extinction or likely to become so in the foreseeable future within a significant portion of its range.

Lower 48 United States Entity: Final Determination

After a thorough review of all available information and an evaluation of the five factors specified in section 4(a)(1) of the Act, as well as consideration of the definitions of ''threatened species'' and ''endangered species'' contained in the Act and the reasons for delisting as specified at 50 CFR 424.11(e), we conclude that removing gray wolves currently listed in the lower 48 United States from the List of Endangered and Threatened Wildlife (50 CFR 17.11) is appropriate. Although this entity is not a species as defined under the Act, we have collectively evaluated the current and potential threats to the lower 48 United States entity, including those that result from past loss of historical range. Wolves in the lower 48 United States entity do not meet the definition of a threatened species or an endangered species as a result of the reduction of threats as described in the analysis of threats and are neither currently in danger of extinction, nor likely to become so in the foreseeable future, throughout all or a significant portion of their range.

Although substantial contraction of gray wolf historical range occurred within the lower 48 United States entity since European settlement, the range of the gray wolf has expanded significantly since its original listing in 1978, and the impacts of lost historical range are no longer manifesting in a way that threatens the viability of the species. The causes of the previous contraction (for example, targeted extermination efforts), and the effects of that contraction (for example, reduced numbers of individuals and populations, and restricted gene flow), in addition to the effects of all other threats, have been ameliorated or reduced such that the lower 48 United States entity does not meet the Act's definitions of ''threatened species'' or ''endangered species.''

Determination of Species Status: Conclusion

Gray wolves were listed under the Act in the 1970s, when the species numbered only about 1,000 individuals and occupied only northeastern Minnesota and Isle Royale, Michigan, a small fraction of its historical range in the lower 48 United States. Since then, our longstanding approach to gray wolf recovery has been to establish healthy populations of gray wolves in three areas of ecological or genetic diversity: The Western United States (the NRM), the Eastern United States, and the Southwestern United States. In two of those areas—the NRM and Eastern United States—wolves are now recovered. As a result, gray wolves in the lower 48 states (excepting the Mexican wolf) are recovered. The western U.S. metapopulation, with stable populations of about 1,900 wolves (in 2015) distributed across several States, has been delisted for years and remains recovered. The successful recovery of wolves in the NRM is highlighted by the recent and ongoing extension of the population farther westward, into western Washington, western Oregon, northern California, and southward into Colorado. The Great Lakes metapopulation, with stable or growing populations totaling over 4,200 wolves in three States, is also recovered for the reasons explained in this final rule. In the third area on which we have focused our recovery efforts—the Southwestern United States—the Mexican wolf subspecies of gray wolf is now separately listed as an endangered species and has not yet recovered. Recovery and delisting of gray wolves in the NRM and Eastern United States is consistent with the requirements of the Act and will further its conservation purposes by allowing us to focus our recovery efforts on imperiled wolves in the Southwestern United States.

Effects of This Rule

This rule revises 50 CFR 17.11(h) by removing the two existing *C. lupus* listed entities from the Federal List of Endangered and Threatened Wildlife. This rule also removes the special regulations found at 50 CFR 17.40(d) for

wolves in Minnesota and the designation of critical habitat found at 50 CFR 17.95(a) for gray wolves in Minnesota and on Isle Royale, Michigan.

Post-delisting Monitoring

Section 4(g)(1) of the Act, added in the 1988 reauthorization, requires us to implement a system, in cooperation with the States, to monitor for not less than 5 years the status of all species that have recovered and been removed from the Lists of Endangered and Threatened Wildlife and Plants (50 CFR 17.11 and 17.12). The purpose of this post-delisting monitoring (PDM) is to verify that a species delisted due to recovery remains secure from risk of extinction after it no longer has the protections of the Act. To do this, PDM generally focuses on evaluating (1) demographic characteristics of the species, (2) threats to the species, and (3) implementation of legal and/or management commitments that have been identified as important in reducing threats to the species or maintaining threats at sufficiently low levels. Under section 4(g)(2) of the Act, we are required to make prompt use of the emergency-listing authority under section 4(b)(7) of the Act to prevent a significant risk to the well-being of any recovered species.

Section 4(g) of the Act explicitly requires cooperation with the States in development and implementation of PDM programs. However, we remain responsible for compliance with section 4(g) and, therefore, must remain actively engaged in all phases of PDM. We also will seek active participation of other State and Federal agencies or Tribal governments that are expected to assume management authority for the species' conservation. In some cases, agencies have already devoted significant resources toward wolf monitoring efforts.

Our monitoring activities will focus on wolves within Minnesota, Wisconsin, and Michigan. Although the entities evaluated in this rule include wolves outside of those states, we have determined that it is appropriate to focus on the Great Lakes area because it includes the currently-listed Minnesota entity and that portion of the 44-State entity that is most significant in terms of vulnerability of the species following removal of the Act's protections. Therefore, by evaluating the monitoring data from the Great Lakes states, we can effectively monitor the status of the species. As explained above (see Determination of Species Status), wolves occupying other portions of the lower 48 United States (the West Coast States and the central Rocky Mountains) occur in small numbers and are part of the recovered and delisted population of gray wolves in the NRM DPS. In the NRM states, post-delisting monitoring is either already completed (Idaho and Montana) or currently in place (Wyoming). This rule does not affect the status of wolves in the NRM DPS because they are already delisted and we are not revisiting that determination. Thus, even though we evaluated a lower 48 United States entity, the wolves in the NRM states are not included in our post-delisting monitoring activities for this rule.

We will monitor wolves in the Great Lakes area in accordance with our February 2008 Post-Delisting Monitoring Plan for the Western Great Lakes Distinct Population Segment of the Gray Wolf, which we developed with the assistance of the Eastern Timber Wolf Recovery Team.

The 2008 plan, although written for a distinct population segment that no longer exists, is still applicable within the Great Lakes area because it focuses on monitoring wolves within the borders of Minnesota, Wisconsin, and the Upper Peninsula of Michigan, and we have determined that there is no new information that would cause us to revise the plan. The plan is available on our website at *https://www.fws.gov/midwest/wolf/population/index.html.*

Under the plan, we will rely on a continuation of State monitoring activities, similar to those that have been conducted by the Minnesota, Wisconsin, and Michigan Departments of Natural Resources in recent years, and Tribal monitoring. These activities will include both population monitoring and health monitoring of individual wolves. During the PDM period, the Service will conduct a review of the monitoring data and program. We will consider various relevant factors (including, but not limited to, mortality rates, population changes and rates of change, disease occurrence, and range expansion or contraction) to determine if the population of wolves within the borders of Minnesota, Wisconsin, and the Upper Peninsula of Michigan warrants expanded monitoring, additional research, consideration for relisting as threatened or endangered, or emergency listing.

Minnesota, Wisconsin, and Michigan Departments of Natural Resources have monitored wolves for several decades with significant assistance from numerous partners, including the U.S. Forest Service, National Park Service, Wildlife Services, Tribal natural resource agencies, and the Service. To maximize comparability of future PDM data with data obtained before delisting, all three State Departments of Natural Resources have committed to continue their previous wolf-population-monitoring methodology, or will make changes to that methodology only if those changes will not reduce the comparability of pre- and post-delisting data. Occupancy modeling has emerged as a scientifically valid technique for estimating population size (Rich et al. 2013, entire; Ausband et al. 2014, entire) and is currently used by numerous States to track wolf numbers (*e.g.,* Idaho, Minnesota, Montana). Wisconsin has begun to explore using data from traditional track surveys and radio-collared wolves in an occupancy modeling framework to develop model-driven estimates of wolf population size. However, current count-based estimates based on track surveys and data from radio-collared wolves will continue to be reported in future years, ensuring comparability of pre- and post-delisting population size estimates and allowing validation of estimates derived from occupancy models. Wisconsin may modify data collection methods in the future to more fully embrace the occupancy modeling approach, but only after validation of occupancy models for a minimum of 3 years and in consultation with Service staff.

In addition to monitoring wolf population numbers and trends, post-delisting monitoring will evaluate post-delisting threats, in particular human-caused mortality, disease, and implementation of legal and management commitments. If at any time during the monitoring period we detect a substantial downward change in the populations or an increase in threats to the degree that population viability may be threatened, we will work with the States and Tribes to evaluate and change (intensify, extend, and/or otherwise improve) the monitoring methods, if appropriate, and consider relisting the gray wolf, if warranted.

We will implement post-delisting monitoring for 5 years beyond the effective date of this rule (see **DATES**, above). We believe that 5 years of post-delisting monitoring is sufficient for the reasons stated in the 2008 plan: (1) The Great Lakes population is estimated to be several times greater than the numerical delisting criteria in the recovery plan; and (2) we do not envision any threat or combination of threats that is or are likely to lead to a rapid decline in wolf numbers in those states. At the end of the 5-year monitoring period, we will conduct a final review and we may request reviews by former members of the Eastern Gray Wolf Recovery Team and

other independent specialists. We will post the results of the review on our website. Based on the final review, we will determine whether to continue monitoring and evaluate whether the gray wolf meets the definition of a threatened species or an endangered species.

Required Determinations

National Environmental Policy Act

We determined that we do not need to prepare an environmental assessment or an environmental impact statement, as defined under the authority of the National Environmental Policy Act of 1969 (42 U.S.C. 4321 *et seq.*), in connection with regulations adopted pursuant to section 4(a) of the Act. We published a notice outlining our reasons for this determination in the **Federal Register** on October 25, 1983 (48 FR 49244).

Government-to-Government Relationship With Tribes

In accordance with the President's memorandum of April 29, 1994, Government-to-Government Relations with Native American Tribal Governments (59 FR 22951), E.O. 13175, and the Department of the Interior's manual at 512 DM 2, we readily acknowledge our responsibility to communicate meaningfully with recognized Federal Tribes on a government-to-government basis. In accordance with Secretarial Order 3206 of June 5, 1997 (American Indian Tribal Rights, Federal-Tribal Trust Responsibilities, and the Endangered Species Act), we readily acknowledge our responsibilities to work directly with Tribes in developing programs for healthy ecosystems, to acknowledge that Tribal lands are not subject to the same controls as Federal public lands, to remain sensitive to Indian culture, and to make information available to Tribes.

We coordinated the proposed rule with the affected Tribes and, furthermore, throughout several years of development of earlier related rules and the March 15, 2019, proposed rule, we have endeavored to consult with Native American Tribes and Native American organizations in order to both (1) provide them with a complete understanding of the changes, and (2) to understand their concerns with those changes. Upon publication of the proposed rule, we invited federally recognized Tribes to consult on a government-to-government basis on our March 15, 2019, proposed rule. We also presented an overview of the proposed rule at the 37th Annual-Native American Fish and Wildlife Society Conference. In preparation of this rule, we met with the Chippewa Ottawa Resources Authority Board and the Great Lakes Indian Fish and Wildlife Commission's Voigt Inter-Tribal Task Force to discuss the proposal. We also offered to meet individually with and discuss the proposal with any Tribe that wanted to do so and met with the Keweenaw Bay Indian Community Natural Resources Program, Fond du Lac Band of Chippewa Indians, and the Nez Perce. Additionally, we have fully considered all of the comments on the proposed rule submitted by Tribes and Tribal organizations and have attempted to address concerns, new data, and new information where appropriate.

If requested, we will conduct additional consultations with Native American Tribes and multi-Tribal organizations subsequent to this final rule to facilitate the transition to State and Tribal management of wolves within the lower 48 United States outside of the NRM DPS, where wolves are already under State and Tribal management.

References Cited

A complete list of all references cited in this rule is available at *http://www.regulations.gov* under Docket No. FWS–HQ–ES–2018–0097 or upon request from the Service's Headquarters Office (see **FOR FURTHER INFORMATION CONTACT**).

Authors

The primary authors of this rule are Service staff members.

List of Subjects in 50 CFR Part 17

Endangered and threatened species, Exports, Imports, Reporting and recordkeeping requirements, Transportation.

Regulation Promulgation

Accordingly, we hereby amend part 17, subchapter B of chapter I, title 50 of the Code of Federal Regulations, as set forth below:

PART 17—ENDANGERED AND THREATENED WILDLIFE AND PLANTS

■ 1. The authority citation for part 17 continues to read as follows:

Authority: 16 U.S.C. 1361–1407; 1531–1544; and 4201–4245, unless otherwise noted.

§ 17.11 [Amended]

■ 2. Amend § 17.11(h) by removing both entries for ''Wolf, gray (*Canis lupus*)'' under Mammals in the List of Endangered and Threatened Wildlife.

§ 17.40 [Amended]

■ 3. Amend § 17.40 by removing and reserving paragraph (d).

§ 17.95 [Amended]

■ 4. Amend § 17.95(a) by removing the critical habitat entry for ''Gray Wolf (*Canis lupus*).''

Aurelia Skipwith,

Director, U.S. Fish and Wildlife Service.

[FR Doc. 2020–24171 Filed 11–2–20; 8:45 am]

BILLING CODE 4333–15–P

FEDERAL REGISTER

Vol. 85 Tuesday,

No. 213 November 3, 2020

Part IV

Department of Transportation

National Highway Traffic Safety Administration

49 CFR Part 572

Anthropomorphic Test Devices; Q3s 3-Year-Old Child Side Impact Test Dummy; Incorporation by Reference; Final Rule

DEPARTMENT OF TRANSPORTATION

National Highway Traffic Safety Administration

49 CFR Part 572

[Docket No. NHTSA–2020–0088]

RIN 2127–AL04

Anthropomorphic Test Devices; Q3s 3-Year-Old Child Side Impact Test Dummy; Incorporation by Reference

AGENCY: National Highway Traffic Safety Administration (NHTSA), Department of Transportation (DOT).

ACTION: Final rule.

SUMMARY: This final rule amends NHTSA's regulation on anthropomorphic test devices (ATD) to add design and performance specifications for a test dummy representing a 3-year-old child, called the ''Q3s'' test dummy. The Q3s is an instrumented dummy that can assess the performance of child restraint systems in protecting small children in side impacts. Adding the Q3s provides NHTSA a new test device that can be used to improve side impact protection for children.

DATES: The effective date of this final rule is: January 4, 2021. The incorporation by reference of the publications listed in the rule has been approved by the Director of the Federal Register as of January 4, 2021.

Petitions for reconsideration: Petitions for reconsideration of this final rule must be received not later than December 18, 2020. The petition will be placed in the docket. Anyone is able to search the electronic form of all documents received into any of the agency's dockets by the name of the individual submitting the comment (or signing the comment, if submitted on behalf of an association, business, labor union, etc.).

ADDRESSES: Petitions for reconsideration of this final rule must refer to the docket and regulatory information number (RIN) set forth above and be submitted to the Administrator, National Highway Traffic Safety Administration, 1200 New Jersey Avenue SE, Washington, DC 20590. Note that all petitions received will be posted without change to *http://www.regulations.gov,* including any personal information provided. To facilitate social distancing due to COVID–19, please email a copy of the petition to *nhtsa.webmaster@dot.gov.*

Privacy Act: In accordance with 5 U.S.C. 553(c), DOT solicits comments from the public to better inform its rulemaking process. DOT posts these comments, without edit, to *www.regulations.gov,* as described in the system of records notice, DOT/ALL–14 FDMS, accessible through *www.dot.gov/privacy.* In order to facilitate comment tracking and response, the agency encourages commenters to provide their name, or the name of their organization; however, submission of names is completely optional. Whether or not commenters identify themselves, all timely comments will be fully considered. If you wish to provide comments containing proprietary or confidential information, please see below.

Confidential Business Information: If you wish to submit any information under a claim of confidentiality, you should submit three copies of your complete submission, including the information you claim to be confidential business information, to the Chief Counsel, NHTSA, at the address given under **FOR FURTHER INFORMATION CONTACT**. In addition, you should submit a copy, from which you have deleted the claimed confidential business information, to Docket Management at the address given above. When you send a comment containing information claimed to be confidential business information, you should include a cover letter setting forth the information specified in NHTSA's confidential business information regulation (49 CFR part 512). To facilitate social distancing due to COVID–19, NHTSA is treating electronic submission as an acceptable method for submitting confidential business information (CBI) to the agency under 49 CFR part 512. *https://www.nhtsa.gov/coronavirus.*

FOR FURTHER INFORMATION CONTACT: *For technical issues:* Peter Martin, NHTSA Office of Crashworthiness Standards (telephone 202–366–5668) (fax 202–493–2990), email *Peter.Martin@dot.gov. For legal issues:* Deirdre Fujita, NHTSA Office of Chief Counsel (telephone 202–366–2992) (fax 202–366–3820), email *Dee.Fujita@dot.gov.* Mailing address: National Highway Traffic Safety Administration, U.S. Department of Transportation, 1200 New Jersey Avenue SE, West Building, Washington, DC 20590.

SUPPLEMENTARY INFORMATION:

Table of Contents

I. Executive Summary
II. Background
  a. 2013 Part 572 NPRM and 2014 FMVSS No. 213 NPRM
  b. Comments on the 2013 Part 572 NPRM
III. Summary of Differences Between the NPRM and This Final Rule
  a. Acceptance Criteria for the Qualification Tests
  b. Qualification Test Procedures
  c. Engineering Drawings and the Procedures for Assembly, Disassembly, and Inspection (PADI)
IV. Response to Comments (Part I) on Developing the Regulation
  a. Copyright and Patent Issues
  b. Dummy Availability and Associated Data
  c. Developmental Stage of the Dummy
  d. Biofidelity
  e. Repeatability and Reproducibility (R&R)
V. Post-NPRM Test Program Overview
  a. Test Locations
  b. Other Data
  c. Component Tests in the Post-NPRM Test Program
  d. Controlling Variability
VI. Results of the Post-NPRM Test Program and the Final Acceptance Criteria for the Qualification Tests
  a. Background
  b. Process for Setting the Final Qualification Criteria
  c. Head
  d. Neck
  e. Lumbar Column
  f. Shoulder
  g. Thorax
  h. Pelvis
VII. Response to Comments (Part II) on the Dummy Qualifications and Test Procedures
  a. Head Qualification
  b. Neck Qualification
  c. Arm Position
VIII. Post-NPRM Data From Humanetics
  a. Qualification Tests
  b. Mass and Anthropometry Measurements
IX. Drawing Package and PADI
X. Other Issues
  a. Durability
  b. Consideration of Alternatives
XI. Rulemaking Analyses and Notices

I. Executive Summary

This final rule amends NHTSA's regulation on anthropomorphic test devices (49 CFR part 572) by adding a new Subpart W that sets forth design and performance specifications and qualification tests for a test dummy representing a 3-year-old child, called the Q3s test dummy. The Q3s is an instrumented dummy that can assess the performance of child restraint systems in protecting small children in side impacts. The Q3s weighs 14.5 kilograms (kg) (32.0 pounds) and has a seated height of 556 millimeters (mm), and is representative of a 50th percentile 3-year-old child. The Q3s dummy's main parts (head, thorax, neck, shoulder, spine, abdomen, pelvis, and relevant instrumentation) and biofidelity are described in detail in a November 21, 2013 notice of proposed rulemaking (NPRM) preceding this final rule (78 FR 69944, 69946). NHTSA plans to use the Q3s test dummy in a

proposed side impact test for child restraints.[1]

This final rule incorporating the Q3s into 49 CFR part 572 standardizes NHTSA's specifications on the dummy for testing and research purposes. Subpart W specifies a set of qualification tests and acceptance criteria for the Q3s's head, neck, shoulder, thorax, lumbar, and pelvis, assessing 35 response mechanisms for the dummy.[2] Additionally, Subpart W incorporates by reference a technical data package (TDP) for the Q3s consisting of a set of engineering drawings, a parts list, and a user's manual that has procedures for assembly, disassembly, and inspection (PADI) of the dummy.[3] Q3s dummies manufactured to meet the acceptance criteria for the qualification tests and the TDP will be uniform in their design, construction, and response to impact forces.

As discussed in the November 21, 2013 NPRM, the Q3s was found to exhibit repeatable performance in CRS side impact sled testing and in component-level qualification testing. However, NHTSA acknowledged in the NPRM that the agency's findings in the proposed rule were based on only a few Q3s dummies then in existence. At the time of publication of the NPRM, the Q3s was a proprietary product owned by Humanetics Innovative Solutions Inc. (HIS), and HIS was the only source from which to obtain the dummy. NHTSA developed the Q3s NPRM based on NHTSA's testing experiences with four units that the agency had purchased from HIS. In the NPRM, the agency expressed a desire to examine more data on more dummies from multiple test labs and an expectation that it will ''continue to collect qualification data'' and ''will examine all qualification data provided to us by commenters.'' 78 FR at 69959.

NHTSA received comments on the Q3s NPRM from the Juvenile Products Manufacturers Association (JPMA), Graco Children's Products, Inc. (Graco), Dorel Juvenile Group (Dorel), and HIS. Several commenters said they could not obtain the Q3s dummies from the dummy manufacturer HIS and so had little or no information about the ATD. Some expressed concern that the dummy's repeatability and reproducibility of performance were not assessed across various test facilities. Some asked for more data from tests with more dummies to round out the qualification corridors. In addition, the commenters made several technical comments relating to the ATD.

Subsequently, in mid-2014, HIS began delivery of new Q3s dummies to end-users that included NHTSA, CRS manufacturers, and testing laboratories. In 2014 and 2015, to obtain more data on the Q3s, NHTSA undertook systematic testing of the new units from HIS, contracting with laboratories to carry out a full series of qualification tests with six Q3s dummies. The units included three of the agency's original four dummies together with new dummies manufactured in 2014.

The agency set up a series of experiments designed to evaluate the performance of the Q3s in several different labs, examining the repeatability and reproducibility of the Q3s's performance. NHTSA designed the test program to assess all sources of variability, to quantify the degree of variability, determine its acceptability, and assess whether the underlying cause was a non-uniform test procedure at a lab (and among the labs), an aspect of dummy design, or the dummy manufacturer's production of Q3s units. Data from the tests were used to finalize the acceptance criteria for the qualification tests and ensure that a high level of repeatability and reproducibility (R&R) will be maintained henceforth.[4]

For this final rule, HIS has removed all proprietary rights to the Q3s. Single-source restrictions were in place during the NPRM stage (HIS retained rights to manufacture the dummy). However, the dummy drawings and designs are now free of any restrictions. This includes restrictions on their use in fabrication and in building computer simulation models of the dummy.

Benefits and Costs

The benefits associated with this rulemaking cannot be quantified. The incorporation of the test dummy into 49 CFR part 572, the first-ever child test dummy incorporated by NHTSA for use in side impacts, has the potential to significantly improve child passenger safety in motor vehicles. Adopting the Q3s gives NHTSA a tool to assess the performance of dynamic side impact protection requirements for child restraints using an ATD representative of children for whom the CRS is designed, and quantitatively evaluate the effectiveness of CRSs in preventing or attenuating head and chest impacts in side impacts. In addition, the availability of this dummy in a regulated format will provide a test tool that can potentially be used with other products designed to benefit children in side impacts.

This final rule does not impose any requirements on anyone. NHTSA has proposed to use the Q3s in its compliance testing of the FMVSS No. 213 test under development, but even following adoption of the test, manufacturers would not be required to use the Q3s or assess the performance of their products in the manner specified in the standard. Child restraint manufacturers would be affected by this final rule only if they choose to use the Q3s to test their products.

For entities choosing to own the Q3s, NHTSA estimates that the estimated cost of an uninstrumented Q3s dummy is approximately $50,000. Instrumentation installed within the dummy needed to perform the qualification in accordance with part 572, subpart W, adds approximately $20,000, for a total cost of about $70,000.

Summary of Decision

The data presented in the 2013 NPRM and obtained in NHTSA's post-NPRM test program demonstrate that the Q3s is a valuable tool for use in side impact testing. Adopting the Q3s into 49 CFR part 572 enhances NHTSA's efforts to reduce unreasonable risks posed by side crashes to children.

II. Background

a. 2013 Part 572 NPRM and 2014 FMVSS No. 213 NPRM

On November 21, 2013, NHTSA published an NPRM proposing design

[1] NPRM to amend Federal Motor Vehicle Safety Standard (FMVSS) No. 213, ''Child restraint systems,'' January 28, 2014, 79 FR 4570.

[2] Test dummies specified in 49 CFR part 572 are subjected to a series of tests, called ''qualification tests,'' to ensure that their components are functioning properly. Conformity to the acceptance criteria for the qualification tests qualify the dummy as an objective and suitable test device for the assessment of occupant safety in compliance tests specified in the FMVSSs. Conformity assures that the dummy can respond properly in the compliance test, while non-conformance indicates the need for adjustment, repair or replacement. Qualification tests also monitor the response of components that may tend to deteriorate over time. For each test, certain dummy sensors and signal characteristics (such as the magnitude and timing) have been specified as qualification targets. By monitoring these sensors, the qualification tests assure that the dummy is functioning properly. Loose or damaged dummy hardware is often manifested in a signal that does not conform to the qualification targets, thus indicating that dummy maintenance may be needed. Conformity also assures that the sensors themselves are working properly.

[3] The parts list, engineering drawings, and the PADI for the Q3s are available for examination in the docket for this final rule.

[4] The additional data also led to NHTSA's making some technical modifications to the proposed part 572 specifications, *i.e.,* NHTSA removed the requirement for the pubic load in the pelvis impact test, revised aspects of the neck and lumbar tests, and corrected some of the drawings for the dummy. The agency discusses and lists the technical changes from the NPRM to this final rule below in this preamble.

and performance specifications and qualification tests for the Q3s, a new test dummy representative of a 3-year-old child for use in side impact testing (78 FR 69944). On January 28, 2014, NHTSA published an NPRM proposing to amend FMVSS No. 213 to add a new side impact test in which the Q3s would be used. The proposed side impact test applies to CRSs designed for children weighing up to 18 kg (40 pounds) (79 FR 4570). The proposal responds to a statutory mandate in the ''Moving Ahead for Progress in the 21st Century Act'' (MAP–21),[5] that NHTSA ''issue a final rule amending Federal Motor Vehicle Safety Standard Number 213 to improve the protection of children seated in child restraint systems during side impact crashes.'' These two NPRMs are referred to herein as the part 572 NPRM and the FMVSS No. 213 NPRM, respectively.

b. Comments on the 2013 Part 572 NPRM

NHTSA received comments on the part 572 NPRM from HIS, Graco Children's Products, Inc. (Graco), Dorel Juvenile Group, Inc. (Dorel), and the Juvenile Products Manufacturers Association (JPMA). Some of the comments on the FMVSS No. 213 NPRM discussed subjects pertaining to the part 572 NPRM, which NHTSA discusses in this document as appropriate. The commenters on the FMVSS No. 213 NPRM include Evenflo Company, Inc. (Evenflo), Britax Child Safety, Inc. (Britax), Consumers Union, Advocates for Highway and Auto Safety (Advocates), and Transport Research Laboratory, UK (TRL).

Commenters on the part 572 NPRM discussed issues related to the following main areas: single source and patents; dummy and qualification data availability, biofidelity; repeatability and reproducibility of results (R&R); qualification test corridors, drawing errors; and test procedure protocols. These issues and NHTSA's responses to the comments are discussed below in this preamble.

III. Summary of Differences Between the NPRM and This Final Rule

a. Acceptance Criteria for the Qualification Tests

A comparison of the acceptance criteria for the qualification tests (or ''qualification limits'') in the NPRM versus the final rule is summarized in Table 1. All changes from the NPRM are discussed below in this preamble. The velocities and acceleration pulses of the impacting pendulums, which ensure that qualification test conditions are uniform, are unchanged from the NPRM.

TABLE 1—Q3S QUALIFICATION LIMITS

[NPRM vs. final rule]

Test	Measurement	Units	NPRM	Final rule
Head—Frontal	Resultant acceleration	G	250–297	255–300.
	Off-axis acceleration (Ay)	G	−20 to +20	−15 to +15.
Head—Lateral	Resultant acceleration	G	113–140	114–140.
	Off-axis acceleration (Ax)	G	−20 to +20	−15 to +15.
Neck—Flexion	Maximum rotation	deg	70–82	69.5–81.0.
	Time of max rotation	msec	55–63	no req.
	Peak moment (My)	N-m	41–51	41.5–50.7.
	Time of peak My	msec	49–62	note 1.
	Decay time to 0 from peak angle	msec	50–54	45–55.
Neck—Lateral	Maximum rotation	deg	77–88	76.5–87.5.
	Time of max rotation	msec	65–72	no req.
	Peak moment (Mx)	N-m	25–32	25.3–32.0.
	Time of peak Mx	msec	66–73	note 1.
	Decay time to 0 from peak angle	msec	63–69	61–71.
Neck—Torsion	Maximum rotation	deg	75–93	74.5–91.0.
	Time of max rotation	msec	91–113	no req.
	Peak moment (Mz)	N-m	8–10	8.0–10.0.
	Time of peak Mz	msec	85–105	note 1.
	Decay time to 0 from peak angle	msec	84–103	85–102.
Shoulder	Lateral displacement	mm	16–21	17.0–22.0.
	Peak probe force	N	1240–1350	1123–1437.
Thorax with Arm	Lateral displacement	mm	23–28	22.5–27.5.
	Peak probe force	N	1380–1690	1360–1695.
Thorax without Arm	Lateral displacement	mm	24–31	24.5–30.5.
	Peak probe force	N	620–770	610–754.
Lumbar—Flexion	Maximum rotation	deg	48–57	47.0–58.5.
	Time of max rotation	msec	52–59	no req.
	Peak moment (My)	N-m	78–94	78.2–96.2.
	Time of peak My	msec	46–57	note 1.
	Decay time to 0 from peak angle	msec	50–56	49–59.
Lumbar—Lateral	Maximum rotation	deg	47–59	46.1–58.2.

[5] Section 31501(a) of Subtitle E, ''Child Safety Standards,'' of MAP–21 (July 6, 2012) (Pub. L. 112–141).

TABLE 1—Q3S QUALIFICATION LIMITS—Continued

[NPRM vs. final rule]

Test	Measurement	Units	NPRM	Final rule
	Time of max rotation	msec	50–59	no req.
	Peak moment (Mx)	N-m	78–97	79.4–98.1.
	Time of peak Mx	msec	46–57	note 1.
	Decay time to 0 from peak angle	msec	47–59	48–59.
Pelvis	Peak pubic load	N	700–870	no req.
	Peak probe force	N	1570–1810	1587–1901.

[1] Maximum moment occurs during the time interval while the rotation is within the specified interval.

b. Qualification Test Procedures

The agency made a few adjustments to the proposed qualification test procedures, which are summarized in Table 2 below. (Noteworthy changes are discussed in this preamble.) For simplicity, the English units that were shown in parentheses in the regulatory text of the NPRM are omitted. The qualification tests themselves are essentially unchanged from the NPRM.[6]

TABLE 2—SUMMARY OF REVISIONS TO PROCEDURES

Reg. text affected section	Description of change
§ 572.212(c)(1) Head drop test	Ambient temp. now 20.6–22.2 deg C.
§ 572.213(c)(1)(i) Neck flexion test, § 572.213(c)(2)(i) Neck lateral flexion test, § 572.213(c)(3)(i) Neck torsion test, § 572.217(c)(1)(i) Lumbar flexion test, § 572.217(c)(2)(i) Lumbar lateral flexion test.	Maximum moment now occurs when rotation is within the specified range.
§ 572.213(b)(3)(ii) Neck torsion test	Correction on time = 0 definition.
§ 572.213(c)(2)(ii) Neck lateral flexion test, § 572.217(c)(2)(ii) Lumbar lateral flexion test.	Correction on specifying left vs. right mirroring in test setup figures.
§ 572.214(c)(4) Shoulder test, § 572.215(c)(4) Thorax with arm tests	New steps to position arm against thorax.
§ 572.218(a) Pelvis assembly and test procedure, § 572.219 Test conditions and instrumentation.	Pubic load cell now optional since pubic criterion has been omitted.
§ 572.212(c)(4) Head drop test, Figures W1, W2	Surface finish: 0.2–2.0 microns RMS.
§ 572.212(c)(2)(ii) Lumbar lateral flexion test	Headform sagittal plane perpendicular (not parallel) to the motion of the pendulum.
Figures W6, W7, W8, W11	Correction on probe mass: Now 3.81 kg.
Throughout regulatory text	English units omitted.

This final rule also corrects the following errors. The surface finish of the steel plate used in the head qualification test was not specified correctly in the NPRM. The correct specification is 0.2–2.0 microns root mean square (RMS). In the lateral lumbar qualification test, the proposed regulatory text was unclear in how it described the orientation of the headform, so it has been clarified. In Figures W6, W7, W8, and W11 of the proposed regulatory text, the probe mass was labeled incorrectly as 3.85 kg. The correct value is 3.81 kg.

c. Engineering Drawings and the Procedures for Assembly, Disassembly, and Inspection (PADI)

For this final rule, NHTSA has revised some of the engineering drawings to address discrepancies between the PADI and the engineering drawings, and some inconsistencies HIS noticed between the drawings it provided NHTSA for development of the NPRM and the dummies HIS produced. The changes are all valued-added revisions that either correct errors or provide missing information. They are not alterations that would change the dummy in any meaningful way or alter the dummy's response in either pre-test qualification testing or dynamic sled testing with CRSs. The changes to the drawings and the PADI are discussed in detail in Section IX below. A comprehensive listing of changes is described in the document, ''Q3s Engineering Drawing Changes, Rev. J, May 2016.''[7] The design of the Q3s is essentially unchanged.

IV. Response to Comments (Part I) on Developing the Regulation

a. Copyright and Patent Issues

HIS had certain property rights in the Q3s engineering drawings during the notice and comment period of this rulemaking. As discussed in the NPRM (78 FR at 69965–69966), during the notice and comment period, the Q3s engineering drawings used to fabricate the dummy were available in the docket for public review and comment, but most displayed the HIS name in the title block with a note restricting copying of or using the drawings other than for commenting purposes. NHTSA stated in the NPRM that the name, note, and all restrictions associated with the drawings will be removed at the final rule stage. Separately, in the NPRM, NHTSA noted its awareness that a patent application filed by HIS may cover certain parts of the Q3s dummy.

Comments Received

NHTSA received several comments expressing concern about the intellectual property restrictions on the dummy. JPMA and Dorel expressed concern that manufacturers will be bound to purchase a single-sourced dummy that is subject to patents and unregulated price points.

[6] The qualification tests have proven reliable and sound in qualifying the Q3s throughout the dummy's developmental stages and in qualifying virtually all other test dummies specified in part 572.

[7] This document can be found in the docket for this final rule.

NHTSA Response

The Q3s specified in this final rule is free of any known copyright or patent restrictions.

Although copyright restrictions were in place during the NPRM stage for the Q3s engineering drawings, all restrictions are removed for this final rule. The HIS name and the copyright note have been removed from all of the drawings. The dummy drawings are free of any restrictions and can be used in dummy fabrication and in building computer simulation models of the dummy. Moreover, there are no patents associated with the Q3s adopted by this final rule.[8]

b. Dummy Availability and Associated Data

The difficulty in obtaining the Q3s was brought up in comments to both the part 572 and the FMVSS No. 213 NPRMs by several commenters. JPMA indicated it was not possible to learn of the strengths and limitations of the Q3s, particularly regarding its repeatability, reproducibility, and reliability. Graco, Britax and Evenflo indicated that the lack of availability of the dummy to the CRS industry and outside test facilities has prevented a more complete evaluation of the dummy across various test facilities and multiple CRS manufacturers. Dorel and HIS commented that more data from more dummies are needed to round out the qualification corridors.

NHTSA Response

It is true that the Q3s was generally unavailable from HIS during the original comment period which ended April 28, 2014. Because of that unavailability, on June 4, 2014, NHTSA reopened the comment period for the FMVSS No. 213 NPRM, granting a petition from JPMA (79 FR 32211). NHTSA agreed at that time to reopen the comment period until October 2, 2014, because the Q3s was slated to become widely available from HIS to CRS manufacturers around mid-2014.[9] Since mid-2014, the dummy has been available, as HIS has filled many orders for the Q3s since then.

Regarding the qualification corridors, NHTSA concurs that development of qualification corridors is benefitted when more data are available on the ATD's performance in the qualification tests. In the NPRM for this final rule (78 FR 69959), the agency acknowledged that there was a limited amount of qualification data available to NHTSA for use in setting the proposed qualification limits.[10] NHTSA stated in the NPRM that the agency expected to receive qualification data from end-user commenters on the dummies tested at their own laboratories, and that, with those data, the agency would adjust the qualification limits to account for a greater population of dummies, and modify the test procedures as needed.[11]

When data from users were not forthcoming because of the unavailability of the Q3s, NHTSA designed a test program to obtain the desired data once the dummy became available. In mid-2014, NHTSA borrowed three new Q3s units from existing owners (manufactured by HIS and delivered to end-users in mid-2014) to collect comparative qualification data with their new units. The agency systematically tested the three new units, as well as three of the agency's older units (manufactured in 2012 or before and used to develop the 2013 part 572 NPRM). NHTSA hired test labs to carry out a full series of qualification tests with the six Q3s dummies.

The agency's design of experiments allowed NHTSA to assess the reproducibility and repeatability of the dummy and sort out sources of variability. NHTSA examined variability due to any non-uniform test procedure at each lab (and among the labs), variability in the dummy design, and variability in HIS's production of multiple Q3s units. Using this systematic process, NHTSA compiled the additional test data, and those submitted by other end-users, to set the acceptance criteria for the qualification tests for the Q3s. The post-NPRM test program is discussed at length in this preamble in Sections V and VI.

c. Developmental Stage of the Dummy

Comment Received

The NPRM referred to the Q3s as the ''build level D'' iteration of the dummy (Build D). ''Build level'' is a term used by HIS to describe a specific revision level of the dummy relative to previous versions it sold. The Q3s drawings that HIS provided NHTSA prior to the publication of the NPRM were marked as revision level D.[12]

In its comment, HIS states that it considers the build level D dummy to be out of date, and that the dummy specified in a final rule should be referred to as ''Build E.'' HIS states that not using the ''Build E'' designation could cause hardship to its customers who might not know which version of the dummy they own, or who might erroneously assume that their build level D dummy is up to date when in fact the ATD ''may be missing key updates.''

NHTSA Response

For the reasons set forth below, NHTSA declines to make the change. NHTSA does not believe that using the HIS naming conventions for this final rule is necessary or warranted. For the final rule, the agency has adopted a drawing package that has been periodically fine-tuned since publication of the NPRM in 2013 (discussed in sections below), so the revision level of the Technical Data Package had been updated from Revision (Rev.) D to Rev. J. We do not believe that NHTSA has to name the Q3s ''Build E'' to enable HIS to notify customers who bought Build D units built between December 2010 and November 2013 that their units may be missing key updates. HIS can use its sales records and customer outreach to determine which Q3s units its customers bought and which need updating. With those records and outreach, HIS can determine the type of conversion needed to bring the units up to date and facilitate their customers' updates of the previously-purchased ATDs.

[8] The patent issue was discussed in the NPRM (78 FR at 69965). Around the time of the NPRM, NHTSA became aware that HIS had filed a patent application with the United States Patent and Trademark Office potentially covering certain parts of the Q3s dummy. However, the patent eventually issued—for a rib cage incorporating a polyurethane material with a type of metal insert—is not used in the current design. (*See* U.S. Patent No. 8,840,404 B2, ''Rib cage for assembly for crash test dummy,'' September 23, 2014.) Accordingly, the patent does not apply to the version of the Q3s specified in this final rule.

[9] Graco apparently was able to obtain and assess a new Q3s unit during the reopened comment period. In a comment on the FMVSS No. 213 NPRM, Graco states that it ''supports the use of the Q3s ATD for side impact testing based on NHTSA's data and confirmed structural performance during the developmental testing period. Graco has been using the Q3s in our internal lab for about 6 months and we are satisfied with the overall performance of the ATD.'' ''Feedback Document for FMVSS 213 Side Impact [NPRM], Oct. 1, 2014, p.10.

[10] For the NPRM, NHTSA established qualification requirements based on replicate trials conducted sequentially on the four NHTSA-owned Q3s units at VRTC. These tests were used to set the upper and lower limits of the qualification corridors. They were initially set as follows: Either ±3 standard deviations from the mean or ten percent from the mean, whichever was narrower. Upper and lower bounds were then rounded to the next whole number away from the mean using three significant digits such that the final bounds were slightly wider than the initial bounds. NHTSA expected to refine and narrow the corridors when additional data was received on other Q3s units.

[11] The adjustments made to the limits and procedures are listed Tables 1 and 2, *supra.*

[12] In the TDP drawings placed in the NPRM docket, the HIS build level that HIS identified for the ATD is reflected in the top level assembly drawing of the Q3s, 020–0100 (sheet 1). This drawing shows that HIS marked revision level D in the title block.

Comment Received

Dorel believed that many aspects of the Q3s, such as the fixture used to run the neck torsion qualification tests, were not fully engineered, and are thus not finalized and ready for sale. Dorel also cited unavailability of specialized Q3s signal processing software as a hold-up to its dummy evaluation.

NHTSA Response

Dorel is mistaken in believing that the Q3s and its complementary fixtures used in qualification testing were not fully engineered. The NPRM for the Q3s provided all the information needed to assess the dummy in qualification tests, including complete engineering drawings of the neck torsion fixture. The neck torsion fixtures were not rights-protected in the NPRM for the Q3s. The agency knows of at least two other labs in addition to the agency's Vehicle Research and Test Center (VRTC) that have built them on their own (MGA Research Corporation (MGA)) and Calspan).

With regard to Dorel's software concern, NHTSA has not developed specific software for the express purpose of processing qualification data for the Q3s or any other dummy. NHTSA does not provide software that would fully automate the processing of raw signals to determine the PASS/FAIL outcomes in each of the eleven Q3s qualification tests. Such software is a third-party product. As with all part 572 regulations, NHTSA specifies the test procedures, the test equipment, the instrumentation, and the filter frequencies of the test signals. The means to process the signals (in accordance with the part 572 specifications) is left to the discretion of each test lab.

NHTSA does maintain a library of software tools that aid in the processing of raw signal data.[13] This includes a collection of Microsoft Windows graphical applications for analysis and processing of signal data. Core algorithms in this package include minimum/maximum applications, signal scaling, numerical integration, and digital filtering as specified by many FMVSS and part 572 standards (including Subpart W for the Q3s.) These tools may be used to process data generated in Q3s qualification tests.

d. Biofidelity

The part 572 NPRM discussed NHTSA's findings that the Q3s is suitably biofidelic overall and especially in the head, thorax and neck which are the body segments most critical for the intended use of the dummy in side impact testing. (78 FR at 69947–69950.)

Comment Received

In its comment, JPMA stated its belief that the Q3s's biofidelity is not representative of a 3-year-old, living child. JPMA stated [14]—

As the agency is aware, its assessment of the Q3s focused on (1) a scaled-down version of post mortem adult human subject data, and (2) cadaver testing under dynamic loading. Unfortunately, the scaled-down adult data presumes incorrectly that adults and children are the same internally, which is simply not the case. For example, children's bones and bodies in general are much more flexible than their adult counterparts. Merely scaling adult data on the basis of mass, geometric and stiffness ratios will not represent accurate child-centered data. Therefore, while appropriate in size and weight to a live 3-year-old, the Q3s is not representative of live, reactive 3-year-old children. Due to the known differences between the Q3s and the children the ATD is supposed to represent, the developing side impact test standard carries with it a certain level of inherent risk — that child restraints built to comply with the new standard will be moving away from real-world effectiveness.

NHTSA Response

NHTSA's biofidelity assessment of the Q3s (provided in a report in the docket for the NPRM [15]) compared the responses of the dummy to targets previously established for a three-year-old child. The targets themselves were published in a Stapp Journal article by the SAE Hybrid III Dummy Family Task Group.[16]

For ethical reasons, biomechanical response data on children under impact loading are very limited. Therefore, scaling techniques are necessary to derive the child impact response targets from laboratory tests on adult post-mortem human subjects (PMHS).[17]

The SAE scaling procedure followed an impulse-momentum approach to derive response targets for a three-year-old from targets established previously for adults. The procedure made use of adult-to-child ratios of mass, anthropometry, and bone stiffness. In its comments, JPMA implied that this procedure does not account for differences in bone flexibility between adults and children. This is not the case. Differences in bone flexibility are integral to the scaling process, which employs adult-to-child bone stiffness ratios. For three-year-old vs. adult scaling, a bone stiffness ratio of 0.475 was applied. This ratio was derived using measurements of the elastic modulus of human bone samples from actual children as explained in the Stapp article. The scaling ratios were all applied to a lumped mass and spring model to arrive at biomechanical corridors for a three-year-old. Stated differently, the scaling theory used to establish the impact response of a human three-year-old does account for differences in flexibility and stiffness between adults and children.

Details on the derivation of the scaling model and its application may be found in Mertz (1984) [18] and Mertz, et al. (1989).[19] NHTSA notes that the impulse-momentum approach was used for other part 572 child dummies, including the CRABI infant dummy [20] and the Hybrid III family of child dummies.[21] [22] Thus, the biomechanical targets used to assess the Q3s were derived the same way as the targets for all other child dummies. Given the limitations on pediatric data, NHTSA believes the scaling process represents an appropriate, best available method of estimating the living, human child's response characteristics.

To summarize, NHTSA believes that the scaling process used to derive biomechanical response targets for the Q3s is well-founded and reasonable. The scaling process does not presume that adults and children are the same internally. The process assumes that the response of the targeted subject depends

[13] *http://www.nhtsa.gov/Research/Databases+and+Software.*

[14] See Docket NHTSA–2013–0118–0008, page 2.

[15] See Docket NHTSA–2013–0118, ''Biofidelity Assessment of the Q3s Three Year-Old Child Side Impact Dummy,'' July 2012.

[16] Irwin AL, Mertz HJ, Elhagediab AM, Moss S (2002). Guidelines for Assessing Biofidelity of Side Impact Dummies of Various Sizes and Ages. Stapp Car Crash Journal V46: 297–319, SAE International, Warrendale, PA.

[17] Aside from its response to impact, the size and shape of the Q3s is based on child anthropometry. The size and shape of the ATD is not scaled from an adult model or other dummy size.

[18] Mertz HJ (1984), ''A procedure for normalizing impact response data,'' Paper No. SAE 840884, Biomechanics of Impact Injury and Injury Tolerances of the Thorax-Shoulder Complex—PT–45, SAE International, Warrendale, PA.

[19] Mertz HJ, Irwin AL, Melvin JW, Stalnaker RL, Beebe MS (1989), ''Size, weight, and biomechanical impact response requirements for adult size small female and large dummies,'' Paper No. SAE 890756, Automotive Frontal Impacts, SP–782, pp 133–144, SAE International, Warrendale PA.

[20] Melvin JW (1995), ''Injury assessment reference values for the CRABI 6-month infant dummy in a rear-facing infant restraint with airbag deployment,'' Paper No. SAE 950872, SAE Congress and Exposition, Detroit, pp 1–12, SAE International, Warrendale PA.

[21] Kleinberger M, Yoganandan N, Kumaresan S (1998), ''Biomechanical considerations for child occupant protection,'' 42nd Annual Proceedings for the Association for the Advancement of Automotive Medicine, pp 115–136, Charlottesville, VA.

[22] Mertz HJ, Jarrett K, Moss S, Salloum M, Zhao Y (2001), ''The Hybrid III 10-year-old dummy,'' Paper No. 2001–22–0014, Stapp Car Crash Journal, V45, SAE International, Warrendale, PA.

on its internal stiffness, and that internal stiffness varies by the age of the subject. The agency is satisfied with the overall biofidelity of the Q3s and is convinced that CRSs built to comply with the new side impact standard using the Q3s will be effective in the real world.

Q3s Shoulder

NHTSA evaluated the biofidelity of the Q3s shoulder in component testing under the loading of a pendulum. In the NPRM, NHTSA described an ''unpadded'' test conducted involving an SAE International protocol (Irwin, 2002) that uses a rigid pendulum in a pure lateral direction. In the test, the Q3s shoulder showed high stiffness with respect to lateral shoulder displacement and probe force under this test protocol. NHTSA later reexamined shoulder biofidelity under ''padded'' conditions that the agency believed corresponded more closely to the planned use of the Q3s in the proposed FMVSS No. 213 test than the unpadded condition. In the latter test, NHTSA used the Ohio State protocol (Bolte et al., 2003), which utilizes the same impactor mass and speed as the SAE International test but with foam padding attached to the impactor face. NHTSA determined that the latter condition was particularly relevant because the Q3s would most likely be exposed to a padded side structure (''wing'') of the child restraint in the test.[23] The striking surface, like the probe in the Ohio State test, would be padded.

Under the Ohio State protocol, the shoulder of the Q3s was also stiff when assessed for biofidelity as measured by its deflection (about 10 mm below the nominal biofidelity target). However, NHTSA found that the magnitude of the force applied by the padded probe (about 400 N) was well within the upper and lower limits of biofidelity. Therefore, NHTSA believed that the Q3s's shoulder loading of the child restraint, which could affect the overall motion of the dummy's upper torso and head (relevant for the measurement of injury criteria under consideration), was representative of an actual human. (78 FR at 69949–69950.)

Comment Received

JPMA commented that it believed the shoulder of the Q3s is too stiff relative to a human child. The commenter stated that, because the shoulder is too stiff, the trajectory of the head during a compliance test will be unrealistic such that it could register artificially high HIC values. JPMA asserted that child restraint designs will thus need to be ultra-conservative in their ability to keep HIC low, and that this, in turn, could necessitate a seat design that is uncomfortable for children. JPMA was concerned that, to get comfortable, children may take on seating postures that could ultimately put the child at higher risk than when seated in a current CRS (*i.e.,* one that is not designed to meet a new side impact requirement). The commenter did not did not provide any data or analysis supporting these views.

NHTSA Response

It is important to highlight the point made in the NPRM that, under conditions that correspond closest to the intended use of the Q3s in the proposed FMVSS No. 213 side impact test (*i.e.,* using a foam-covered probe that is more akin to the shoulder interaction with a CRS ''wing''), the force response of the padded probe (external biofidelity [24]) nearly matches the target.[25] With the magnitude of the force generated by the padded probe well within the envelope for a biofidelic response, these data show that the Q3s shoulder is biofidelic in the manner in which it will exert force on the CRS. Thus, this loading of the child restraint, which would affect the overall motion of the dummy's upper torso and head (through which the FMVSS No. 213 injury criteria under consideration would be measured), is representative of an actual human. JPMA did not provide any analysis or rationale supporting its conclusions that the Q3s shoulder will cause artificially high HIC values and that uncomfortable seat designs will result. Given all available data and information about the test dummy, NHTSA is satisfied with the biofidelity of the Q3s shoulder and how the ATD's shoulder, head and torso will interact when the dummy is restrained in a child restraint in the side impact test.

e. Repeatability and Reproducibility (R&R)

A test dummy's R&R may be assessed in sled tests and component tests. ''Repeatability'' is defined here as the similarity of responses from a single dummy when subjected to multiple repeats of a given test condition. ''Reproducibility'' is defined as the similarity of test responses from multiple dummies when subjected to multiple repeats of a given test condition. Sled tests establish the consistency of the dummy's kinematics, its impact response as an assembly, and the integrity of the dummy's structure and instrumentation under controlled and representative crash test conditions. In component tests, the test conditions as well as the test equipment are carefully controlled to assure the dummy is subjected to a tightly controlled impulse and to minimize external effects on the dummy's responses.

Assessment of R&R

NHTSA's assessment of R&R was based on a statistical analysis of variance. The percent coefficient of variation (CV) is a measure of variability expressed as a percentage of the mean. The CV is calculated as follows:

$$CV = \frac{\sigma}{\overline{X}} \times 100\%$$

where σ = standard deviation of responses[26]

$\overline{X}$ = mean of responses

[23] CRSs subject to a side impact test would likely use padded side wings as one of the main countermeasures to meet side impact protection requirements.

[24] For pendulum impacts, biofidelity is generally assessed as ''external'' or ''internal.'' External biofidelity is related to the force generated on the face of a pendulum impact probe upon striking a subject. In other words, probe forces generated by dummies are compared against probe forces generated by PMHS. Internal biofidelity is related to a measurement on or within the subject itself, such as shoulder deflection or spine acceleration, for which corresponding measurements are made on both the PMHS and the test dummy.

[25] 78 FR at 69949. ''Biofidelity Assessment of the Q3s Three-Year-Old Child Side Impact Dummy,'' July 2012, Docket No. NHTSA–2013–0118.

[26] Standard deviations are based on a sample and calculated using the ''n–1'' method.

NHTSA has used CVs to assess the repeatability and reproducibility of ATDs throughout the history of part 572, starting in 1975.[27] Separate CVs for repeatability and reproducibility, by labs and by dummies, were computed. The CVs were used to assess the degree to which the current population of Q3s dummies were able to attain targeted responses. In the NPRM, we described how provisional upper and lower limits for all qualification requirements were set at a maximum of 10% (before rounding) from a nominal response target. For any particular requirement, the 10% condition was always met in our post-NPRM testing when the CVs were all below 5% for repeatability and 6% for reproducibility. Under these circumstances, there is a high degree of uniformity in the construction of the dummy components being tested and in the procedures followed by the labs for that test requirement.

For example, in the post-NPRM test series for neck flexion, neck moments from 81 trials were recorded. In all 81 trials, the neck moment was well within 10% of the nominal target and the CVs were all below 5% for repeatability and below 6% for reproducibility. Thus, in our post-NPRM assessments, when the CVs for a particular test condition were below 5% and 6% for repeatability and reproducibility, respectively, no further examination of the data or test condition was carried out.

On the other hand, when a test condition produced a CV above 5% for repeatability or 6% for reproducibility, a response in at least one trial was usually beyond 10% of the nominal target. When a CV exceeded 10%, several trials were beyond 10% of the target. In these instances, a close examination of the data, dummies, and procedure was performed to pinpoint the source of the variability. Corrective actions were taken in most cases.

Our investigative criteria for repeatability uses a slightly lower CV than for reproducibility (5% vs. 6%) as shown in Table 3. Since repeatability is an assessment of the same dummy by the same test laboratory, whereas reproducibility is an assessment of multiple dummies at more than one lab, reproducibility assessments include many more sources of variability. Hence, repeatability CVs are generally lower than reproducibility CVs.

TABLE 3—CV SCORE CATEGORIZATION FOR REPEATABILITY AND REPRODUCIBILITY [28]

Repeatability CV score	Reproducibility CV score	Assessment
<5%	<6%	No further investigation; all trials within ±10% of the target response.
5%–10%	6%–10%	Sources of variability investigated. One or more trials beyond ±10% of target response.
≥10%	≥10%	Corrective actions considered for revisions to test procedure or dummy design. Several trials beyond ±10% of target response.

R&R in Sled Tests

Since the Q3s dummy is being considered as a measurement device for a proposed regulatory test that would evaluate CRS performance in side impact crashes, NHTSA assessed the R&R of the dummy in actual CRS side impact sled tests. This assessment was discussed in the NPRM (78 FR at 69951–69953), where two Q3s units were tested five times each. Of the greatest importance to the assessment were the two measurements associated with injury assessment reference values for CRS requirements under the proposed side impact upgrade to FMVSS No. 213. These were the response of the head [29] and the lateral thorax displacement.

The CVs for the response of the head were less than 3% for all measures of R&R. For the lateral thorax displacement, the CV for reproducibility was also under 6%, and CV for repeatability was under 5% for one of the two Q3s units. For the other unit, the data in one of the tests was quite different from the others. This discrepancy was traced to an inconsistency in the pre-test position of the dummy's elbow in one of the tests which had resulted in a CV for repeatability of 9% for that unit.

In consideration of the elevated CVs, NHTSA ran another (''supplemental'') series of sled tests with an improved arm-positioning protocol. This was also described in the NPRM (78 FR at 69952–69953). Five trials were run with a single unit. The repeatability for the thorax displacement in this series had a CV of 4%. The response of the head again was highly uniform, with a CV of 3%.

Given this high degree of uniformity in those tests and since the design of the dummy was essentially unchanged, NHTSA was satisfied with the R&R of the Q3s in sled testing and determined there was no need to perform additional sled testing for a final rule.

Comment Received

In its comments, Dorel said that it computed a CV of 32.6% for HIC results from ten tests in the supplemental series.

NHTSA Response

The agency believes that Dorel may have misread the results of this series of tests. There were only five tests in this series, not ten as suggested by Dorel. None of the HIC values listed by Dorel correspond with those in NHTSA's test series, so it is unclear where Dorel's data were derived. The agency's test data are available to the public in NHTSA's Biomechanics Data Base (BIODB).[30] The CV in sled testing was only 3% for the HIC values. Given these data, Dorel's comment appears to be mistaken. In view of this high degree of uniformity, NHTSA is satisfied with the R&R of the Q3s in sled tests.

R&R in Component Qualification Tests

In the NPRM, acceptance criteria for the qualification tests were proposed to

[27] See NPRM for the original subpart B Hybrid II 50th percentile male ATD (40 FR 33466; August 8, 1975).

[28] The assessment categories in Table 3 differ slightly from those applied during the NPRM stage. In the NPRM R/R analysis, a similar Table 3 categorized the CV ranges as either ''Excellent,'' ''Good,'' ''Marginal,'' or ''Poor.'' For this final rule, we do not use these terms in the table to describe the CV ranges. Rather, the new Table 3 provides further explanation of the action taken by the agency when the CV for a particular test condition was in a specified range, which, we believe, is more informative and helpful to the reader. Also, although the previous nomenclature for the CV ranges provided a convenient shorthand, we believe the terms it used could be misconstrued by the reader as reflective of a final assessment of the qualities of the ATD being tested.

[29] The response of the head was measured by the acceleration of the head. Additionally, R&R of the head was also assessed via its injury correlate, the head impact criterion (HIC). HIC is computed from the head acceleration measurements.

[30] The Biomechanics data base may be accessed at: *http://www.nhtsa.gov/research-data/databases-and-software.*

assure that the high level of R&R exhibited in the sled tests would be preserved in any dummy presented for compliance testing. In other words, the qualifications would serve to weed out any dummy that had a substantially different response from the uniformity of the original four units. The proposed acceptance criteria were based on a series of eleven component tests with multiple Q3s units in replicate trials. An upper limit and lower limit for an acceptable response were set for each test. The limits were chosen to be wide enough to account for normal variations in dummy and laboratory differences, and narrow enough to assure consistent and repeatable measurements in compliance testing.

As part of this analysis, R&R was assessed for each set of qualification test outcomes. As discussed in the NPRM, most CVs were well under 5% and all were under 10%. The agency was aware, however, that for the NPRM the assessment was carried out using only four units, with all tests run at a single laboratory (VRTC). NHTSA explained in the NPRM that the agency anticipated finalizing the Q3s limits based on additional qualification data we would receive subsequent to the NPRM (78 FR at 69959). Various commenters responding to the NPRM expressed the view that the repeatability and reproducibility assessment of the Q3s ought to be assessed across various test facilities. Some asked for more data from tests with more dummies to round out the qualification corridors.

After the NPRM was published, NHTSA proceeded to obtain more qualification test data as it had planned. NHTSA investigated whether newer dummies tested at different labs exhibited the same level of R&R as NHTSA's original units. In the test program NHTSA designed in mid-2014, the agency used different labs to test both newer Q3s units and the original dummies, and obtained data that could be compared to the existing NPRM data from the original four units.

In 2014 and 2015, NHTSA systematically tested three new units that HIS delivered to end-users and three of the agency's original four dummies. NHTSA examined the R&R of the Q3s's performance to assess all sources of variability so as to identify the degree of variability and whether it was due to a non-uniform test procedure at a lab (and among the labs), an aspect of dummy design, or the dummy manufacturer's production of Q3s units. This systematic approach enabled NHTSA to assess the potential to which factors resulting in the variability could be remedied, adopt measures to mitigate the variances where possible, and assess the quality of the data on the Q3s. The testing also provided data that helped round out the qualification corridors. The program is discussed below. Test results and analyses are discussed in detail in a NHTSA report entitled, ''NHTSA's Q3s Qualification Testing, 2014–2015, May 2016.'' [31]

V. Post-NPRM Test Program Overview

a. Test Locations

NHTSA collected data from tests run at three different laboratories (Calspan, MGA and HIS) independent of NHTSA, and conducted additional tests at NHTSA's VRTC.

At each independent lab, a full set of qualification tests were run (consisting of 11 different types of tests) on two NHTSA-owned units and a new unit. Several trials, or repeat tests, were carried out on each dummy for each of the 11 qualification tests. Tests were done using qualification test equipment owned by each laboratory. Tests were run in strict accord with the procedures described in the NPRM. The input parameters for each test had to conform to the specifications set forth in the proposed qualification procedures. For example, a test in which the probe impact speed did not meet the required parameters did not count toward the total test repetitions. After each test, a post-test inspection of the dummy was carried out to determine if the ATD incurred any damage resulting from the test.

NHTSA Tests at Outside Labs—Calspan and MGA

NHTSA contracted the services of Calspan and MGA to perform the series of qualification tests. The test series are summarized in Table 3. All tests were carried out between January through March 2015.

NHTSA In-House Tests (VRTC)

Prior to shipping NHTSA's two dummies to Calspan and MGA, NHTSA tested the ATDs to the qualification tests at VRTC, but only one trial per test condition was carried out. These results (in addition to those provided in the NPRM) served as a comparative baseline for subsequent tests on the same units at the outside labs. Also, the agency arranged with Britax to test its new Q3s dummy that Britax had received from HIS in 2014. The tests were conducted at VRTC, and the results were added to the data pool.

Tests at HIS

In addition to the data NHTSA itself collected, the agency was also given data by HIS. In 2014, NHTSA lent HIS two of NHTSA's Q3s dummies for HIS to use to compare its qualification procedures and equipment to that described in the NPRM. HIS ran the qualification tests and provided NHTSA with the data from the tests. The agency also obtained from Calspan, MGA and Britax the qualification results performed by HIS on the new Q3s units sold to those end-users. These data were supplied by HIS to each respective purchaser of the dummy at the time of delivery. The owners, in turn, provided the data to NHTSA. The test results were added to the data pool.

Table 4, below, provides an overview of the qualification testing conducted at each lab.

TABLE 4—OVERVIEW OF Q3S QUALIFICATION TESTING

Lab	Q3s serial No.	Dummy owner	Number of trials	Year of tests	Note
VRTC	004	NHTSA	5	2012	Results shown in NPRM.
	006	NHTSA	5	2012	Results shown in NPRM.
	007	NHTSA	5	2012	Results shown in NPRM.
	007	NHTSA	1	2014	Prior to HIS testing.
	007	NHTSA	1	2015	Prior to MGA testing.
	008	NHTSA	5	2012	Results shown in NPRM.
	008	NHTSA	1	2015	Prior to MGA testing.
	3538	Britax	5	2015	Leased from Britax.

[31] A copy of the report has been placed in the docket for this final rule.

TABLE 4—OVERVIEW OF Q3S QUALIFICATION TESTING—Continued

Lab	Q3s serial No.	Dummy owner	Number of trials	Year of tests	Note
HIS	004	NHTSA	3	2014	Leased from NHTSA.
	007	NHTSA	3	2014	Leased from NHTSA.
	3538	Britax	2	2014	Pre-delivery to Britax.
	5860	MGA	2	2014	Pre-delivery to MGA.
	059	Calspan	2	2014	Pre-delivery to Calspan.
MGA	007	NHTSA	5	2015	Contract with NHTSA.
	008	NHTSA	5	2015	Contract with NHTSA.
	5860	MGA	5	2015	Contract with NHTSA.
Calspan	007	NHTSA	5	2015	Contract with NHTSA.
	008	NHTSA	5	2015	Contract with NHTSA.
	059	Calspan	5	2015	Contract with NHTSA.

b. Component Tests in the Post-NPRM Test Program

The component tests were the 11 qualification tests proposed for the Q3s. For each test, there were at least 2 dummy responses for a total of 35 in all. Of the 35 responses, 20 were derived from peak values (such as the peak resultant acceleration for the head drop test or maximum probe force for the pendulum tests). Those 20 were assessed for R&R.[32] The 20 measurements that NHTSA assessed for R&R encompassed each of the eleven types of qualification tests.

c. Controlling Variability

An assessment of dummy R&R is dependent on controlling variability within and among test labs in conducting the qualification tests. A dummy must provide repeatable and reproducible results in the tests, but a qualification test must be repeatable and reproducible to serve its purpose to either qualify or disqualify a dummy.[33] Controlling variability within and among test labs is important for assuring the qualification tests fulfill their purpose.

With this in mind, when NHTSA collected post-NPRM data and observed variability in the test results, the agency closely analyzed any effect a test lab's internal practices, protocols and procedures might have had on the results. Variability caused by a lab's not being able to run a test repeatedly (''test repeatability'') is discussed in each section below. In addition, NHTSA assessed the objectivity of the test methods themselves, or ''test reproducibility,'' to assure that tests with the Q3s at different labs would produce reproducible results.

NHTSA also identified instances in which repeatability was compromised due to a discernable problem with the dummy, such as variability in a particular dummy's responses over time (''dummy repeatability'').

The agency also assessed ''dummy reproducibility,'' *i.e.,* the uniformity of the dummies themselves. This is partly a function of how well HIS was able to manufacture dummies that behave uniformly. Thus, NHTSA was especially interested in comparing the responses of older versus newer units. The agency only used the results from the same lab for this assessment.

Summary of Test Repeatability Assessment

NHTSA assessed the ability of each of the three outside labs (Calspan, MGA and HIS) to attain a repeatable response by analyzing the effect test lab practices, protocols and procedures might have had on the results. Test repeatability was based on same-lab trials with the same dummy: Serial no. 007 (owned by NHTSA), the only dummy tested by all three labs. Thirty-five responses were assessed at each lab.

Additionally, NHTSA performed a separate assessment at Calspan and MGA based on tests with NHTSA-owned dummy serial no. 008. (HIS did not test serial no. 008.)

At Calspan, all test repeatability CVs were below 5% for all tests and for both dummies (serial nos. 007 and 008). At MGA, the CVs were below 5% except in two instances: The Mz measurement in the ''Neck Torsion'' test (5.9%) and in the resultant head acceleration in the ''Lateral Head Drop'' test (10.0%). Both occurred with dummy serial no. 007. All tests at MGA on serial no. 008 yielded CVs below 5% for test repeatability. At HIS (with serial no. 007 only), the CVs where below 5% in all but two instances: The ''Lateral Head Drop'' test (5.6%) and the ''Thorax With Arm'' test (9.3%).[34]

These findings demonstrate a high level of test repeatability and the ability of the three outside labs to carry out the qualification tests. In summary, NHTSA is confident in the data generated by the test labs in this test program.

Summary of Test Reproducibility Assessment

NHTSA assessed the objectivity of the *test methods* to provide consistent results at different labs. The agency evaluated test results from replicate tests on the same dummy (Q3s serial no. 007) at different labs (this ATD was the only unit tested at all four labs). NHTSA also assessed test reproducibility with Q3s serial no. 008, which was tested at VRTC, MGA, and Calspan (but not HIS).

For all 35 sets of measurements, all but three had test reproducibility CVs under 6%. The three sets of tests that had CVs over 6% were: The resultant head acceleration in the lateral head drop test; the Mx component in the lateral neck test; and the pubic force in the pelvis test.[35] The results are discussed in greater depth in a later section below.

Summary of Dummy Repeatability

Dummy repeatability is a measure of how much the response of a given dummy changes during the course of testing. One with a high degree of repeatability exhibits little change from one qualification trial to the next. A change in response could be caused by a hardening or softening of polymeric components over time or the

[32] The other 15 were time-related criteria (such as the time peak at which the maximum neck rotation occurs) or criteria that contained zero in their intervals (such as the peak off-axis acceleration in the head drop test). NHTSA did not include these measurements in the R&R assessment because the CV statistical measure is not a good indicator of variability in these instances.

[33] If a dummy is qualified, it can act as an objective device in compliance tests such as those proposed in the FMVSS No. 213 NPRM. If disqualified, a dummy must be replaced or repaired.

[34] The few instances where CVs for test repeatability were greater than 5% are discussed in greater detail below in this preamble.

[35] As will be discussed later in this document, NHTSA has corrected aspects of the lateral head drop and lateral neck test procedures that had contributed to the elevated variability in the results. Further, the agency has decided not to adopt the pubic force limit in the pelvis test.

propagation of cracks and other defects that occur over repeated impacts. Repeatability could also be affected by loose assembly tolerances. Dummies are routinely disassembled and re-assembled, and wide allowances for settings (such as the joint torques) could result in poor repeatability.

During the course of the qualification testing of the Q3s, NHTSA closely examined the root cause of any variability in trial-by-trial test results that might reveal a problem with the dummy (*i.e.,* a problem with dummy repeatability) rather than simple test variability. There was only one instance where repeatability was compromised due to a discernable problem with the dummy.[36] This instance, which affected the uniformity of the lumbar spine, is discussed below, along with NHTSA's simple fix to the problem. Aside from that, there were no other problems with dummy repeatability in any of the tests. Once the fix to the lumbar was implemented, it was demonstrated to have a highly uniform response. NHTSA also examined changes in the response of the dummy over time and found that such changes had only a negligible effect on dummy repeatability. This is also discussed below.

Loosening of lumbar cable. NHTSA observed that in the lumbar flexion tests, the first trial tended to register a lower moment that subsequent trials. This was consistent with all dummies at all labs. NHTSA examined the wire cable that runs through the center of the rubber column, which was initially placed under tension by tightening a lock nut with a nylon insert[37] prior to the first trial. After the first trial, it was apparent that the nut did not stay in its set position. It could be loosened by hand.

This affected the response of the lumbar spine, as the tension on the cable governs the response of the lumbar column. NHTSA controls this in the PADI by prescribing the torque for the nut on the center cable. However, the torque on a nut with a nylon insert is partly dependent on the condition of the nut itself. A newer nut can resist more torque without affecting the cable tension than a worn nut. In other words, the tension on the cable (and the moment) can vary depending on the condition of the nylon insert of the nut. To alleviate this situation, NHTSA has replaced the nut with two jam nuts, *i.e.,* two standard nuts twisted against each other.

No pronounced changes in response over time. NHTSA assessed also the agency's older unit, serial no. 007, for signs that one or more responses was exhibiting a definitive change during the course of testing due to any sort of deterioration. This unit was tested repeatedly over the course of many years, with the initial tests pre-dating the NPRM. NHTSA examined data from 2012 to 2015 to see if there were any definitive trends in response changes.

To avoid any lab-to-lab variability that could act as a confounder, NHTSA assessed the results from a single lab, VRTC. Data were collected in three separate periods: In 2012 (five trials for the NPRM), in 2014 (one trial prior to sending it to HIS), and in 2015 (one trial just prior to the MGA/Calspan series). Of all the responses, only two had a definitive change in response over the three test periods: Lumbar moment and shoulder deflection. In these instances, the 2015 trial produced a lower/higher response than any of the previous trials (lower for the lumbar moment, higher for the shoulder deflection), while the 2014 trial produced a result that was between the 2015 and 2012 trials.

Yet, even for these two instances, the change in response was negligible. For the lumbar moment, the change in moment was just 2 Nm: 82.6 Nm (lowest of the 2012 trials), 82.1 Nm (in 2014), and 80.6 Nm (in 2015). Similarly, the change in shoulder deflection was less than 1 mm: 19.0 mm (highest of the 2012 trials), 19.5 mm (in 2014), and 19.6 mm (in 2015). In both instances, all responses fell well within the qualification limits specified in this final rule. NHTSA observed no other problems with deterioration over time.

In summary, NHTSA has determined that there are no problems with dummy repeatability that might compromise the overall uniformity of Q3s responses. The one problem with dummy repeatability has been resolved and there are no further concerns.

Summary of Dummy Reproducibility Assessment

In assessing dummy reproducibility, NHTSA examined the uniformity of the dummies themselves. This is partially a function of how well the manufacturer HIS produced dummies that behave uniformly. The agency was especially interested in comparing the responses of older vs. newer units.

To eliminate the effects of lab-to-lab variability, NHTSA only used same-lab results for this assessment. NHTSA also combined results for left and right aspects since the dummy was designed to yield the same response in impacts to both. Thus, four separate assessments of dummy reproducibility were carried out, one per lab, against the units referenced in Table 5 below.

TABLE 5—Q3S DUMMIES USED IN REPRODUCIBILITY ASSESSMENTS AT VARIOUS LABS

Lab	Serial numbers of older NHTSA units	Serial numbers of new units
VRTC	004, 006, 007, 008	3538 (Britax-owned unit).
HIS	004, 007	3538 (Britax-owned unit); 5860 (MGA-owned unit); 059 (Calspan-owned unit).
MGA	007, 008	5860 (MGA-owned unit).
Calspan	007, 008	059 (Calspan-owned unit).

As a secondary assessment, NHTSA compared only the three new units against each other in tests at HIS (HIS was the only lab that tested all three new units). This gave the agency a better sense as to whether the newer units, when considered as a single lot, had more inter-dummy variability as compared to NHTSA's original lot of four units. (As a point of reference, NHTSA assessed dummy reproducibility in the NPRM based on

[36] *Torn lumbar column.* Throughout NHTSA's test experience with the Q3s, dating back to the NPRM, there was only one instance where dummy durability was an issue. In the very last series of tests on serial no. 008 run at Calspan in March 2015, a tear in the rubber column within the lumbar assembly was observed after the first lumbar qualification trial. In subsequent tests, the tear became visibly worse and the lumbar moment and rotation both increased with each successive impact. The biggest jump occurred between trials 1 and 2, where the maximum neck rotation jumped from being centered within the limits of acceptability to just outside the limits. The agency views this instance as a successful demonstration of the ability of the qualification test to weed out a damaged unit.

[37] A nut with a nylon collar insert, often referred to by its tradename, NYLOC, is a nut that resists turning.

tests with the agency's four units (serial nos. 004, 006, 007, and 008) at VRTC and the CVs were less than 6% in all eleven qualification tests.)

The agency's ratings of dummy reproducibility of the new units in the secondary assessment produced CVs in the 6% to 10% range for about 25 percent of the qualifications. The CVs of the other 75 percent were all under 6%, and no further investigation was performed.

NHTSA investigated any set of tests with a CV above 5% for repeatability and 6% for reproducibility to determine the source of the variability. Responses in the lateral head drop and thorax impact test were non-uniform. When units manufactured since 2014 were compared to older units as two separate sets, NHTSA observed differences in responses for several qualifications. In general, the newer Q3s units did not exhibit the same high level of dummy reproducibility observed in NHTSA's four older units.

As explained later in sections below, in a few limited instances, values obtained from a qualification test of a newer ATD were too dissimilar to those from tests of other Q3s units to be included within a set of reasonable qualification limits. Including them would have unacceptably widened the limits, lessened the uniformity of the ATDs, and unacceptably reduced the biofidelity of the Q3s. In such instances, the agency considered the particular dummy part substandard and the values from tests of the part beyond the performance criteria for the qualification test.[38]

VI. Results of the Post-NPRM Test Program and the Final Acceptance Criteria for the Qualification Tests

a. Background

In the NPRM, NHTSA proposed acceptance criteria based on replicate trials conducted sequentially on four NHTSA-owned Q3s units at a single laboratory (VRTC). These tests were used to set the upper and lower limits of the qualification intervals and were used to assess the repeatability of the Q3s.

Of the 35 measurements, the bounds of 21 measurements were proposed as ±3 standard deviations from the mean. Of the 14 other measurements that were set to ±10%, 12 were set at ±2 standard deviations from the mean or greater. Two had bounds that were less than ±2 standard deviations: Peak pubic load (1.9 standard deviations) and peak neck torsion moment (0.5 standard deviations).

At the time of the NPRM, NHTSA recognized that 3 standard deviations comprised a wider-than-usual bound from a probabilistic standpoint. NHTSA regarded the bound as a starting point based wholly on the statistics of the measurements. Three standard deviations were wide enough to account for normal variations in dummy and laboratory differences and narrow enough to assure consistent and repeatable measurements in compliance testing. Moreover, many of the bounds were, in practice, extremely narrow from an operational standpoint owing to factors (equipment, set-ups, technicians) lending themselves to highly repeatable testing at a single lab (VRTC).[39] NHTSA anticipated finalizing the Q3s limits based on additional qualification data the agency would receive subsequent to the NPRM (78 FR at 69959).

b. Process for Setting the Final Qualification Limits

The data from the post-NPRM test program and other sources, discussed above, have helped NHTSA finalize the qualification test procedures and round out the qualification corridors. In specifying qualification tests and acceptance criteria for the qualification tests, NHTSA's goal is to assure that a ''pass'' is a true indicator of a dummy that is uniform in its design and performance. This goal is achieved by ensuring that the tests themselves are repeatable and reproducible, and by setting limits (or tolerances) on the qualification targets.

As discussed in the previous section, test and dummy R&R have been demonstrated at four different labs. The proposed targets and acceptance criteria for the qualification tests in the NPRM were based entirely on the statistics of the agency's replicate tests. NHTSA considered those targets and limits as starting points, given that the agency did not have data from other labs. Since then, the agency has expanded the qualification database by adding much more data on tests with several dummies across four test labs. For this final rule, the qualification targets and limits are based on the statistics of the measurements, but also on the following factors.

Other Part 572 ATDs. NHTSA considered the qualification limits of the other part 572 ATDs in use today in setting those for the Q3s. For example, the qualification bounds for the most recent dummy incorporated into part 572 (the Hybrid III 10-year-old child dummy (HIII–10C); *see* part 572, subpart T), are derived from tests on about 30 different dummies, with data supplied from about ten different laboratories. For the HIII–10C, there are nine qualifications based on a maximum measurement (such as a peak force), and the average limits (*i.e.,* the values defining the range of acceptable measurements) are 9.9% from the midpoint. The low is 8.4% (neck rotation in the neck extension test) and the high is 10.8% (seen in two qualifications: neck moment in the extension test and chest deflection in the thorax impact test).

A limit of 11% from the midpoint is the average for all part 572 dummies and all qualifications. NHTSA has used this value as a benchmark for setting the limits for the Q3s in this final rule. The agency scrutinized any limit above 11% from the midpoint to ensure it could be justified.

Biofidelity targets. In setting the qualification limits, the agency considered the biofidelity targets that were used as the basic design criteria of the Q3s during its development. The corridors surrounding biofidelity targets are generally wider than qualification limits owing to larger variances associated with tests with human subjects. In the NPRM, NHTSA compared the responses of various Q3s body regions against their respective human biofidelity corridors. For the most part, the responses of the body regions fell within the biofidelity corridors (including the responses for the head and thorax). For the final rule, NHTSA made sure that a contemplated qualification limit would not result in acceptance of a dummy response that is outside the biofidelity corridors.

Some body regions, such as the shoulder, were shown in the NPRM to be stiff relative to the biofidelity targets. For these body regions, any shifts in the qualification limits for the final rule were generally made in a direction that was closer to the biofidelity target. In other words, NHTSA avoided moving the nominal qualification target further from the biofidelity target.

Test input parameters. For this final rule, NHTSA has not changed the input parameters in any of the eleven qualification tests from those of the NPRM. The input parameters include

[38] The high CVs for dummy reproducibility indicates that some newer Q3s dummies in the field may have to have parts reworked or replaced to produce a ''pass'' in the head drop test and thorax without arm test. Going forward, this final rule's setting of the acceptance criteria for the qualification tests should help provide checks and controls in the ATD's manufacturing processes, which in turn should facilitate the production of ATDs that meet the acceptance criteria for the qualification tests.

[39] For example, the NPRM's 3-standard-deviation interval for the time at which the peak neck moment occurs was only 7 ms.

impact speeds, probe masses, drop heights, and dimensional measurements related to dummy positioning. Tolerances on test inputs are also unchanged.

For this final rule, nineteen Q3s qualifications are centered around a maxima. For these measurements, the limits proposed in the NPRM were spread around a nominal target response by plus or minus 9.9% (on average) of the target. The average spread in this final rule is slightly higher, at 10.1%. However, as seen in Table 1, *supra,* the limits are narrower for 11 of the nineteen qualifications, and only the shoulder has limits greater than 12%: Internal shoulder deflection (12.8%) and shoulder probe force (12.3%).

Newer dummies and other test labs. NHTSA considered the population of all dummies tested—both old and new—and all four labs that were used. Recognizing that the newest dummies may be representative of the future population of Q3s dummies, steps were taken to be inclusive of them as reasonably possible. NHTSA also recognized that all four labs were highly experienced in dummy qualification testing, so in theory any dummy that qualified at one lab should have qualified at the others. When this was not the case, the situation was analyzed to determine the source of the problem.

Balancing the factors. In setting the final qualification limits for the final rule, NHTSA examined the test data on a trial-by-trial basis and balanced all the factors discussed above. For example, for the lumbar flexion qualification, while keeping the 11% goal in mind NHTSA set the qualification limits such that serial no. 059 (a new unit owned and tested by Calspan) was just under the upper limit in four of five trials, while serial no. 5860 (a new unit owned by and tested by MGA) was just over the lower limit in four of five trials. Balancing the factors enabled NHTSA to set qualification limits spread 10.9% from the nominal target in a manner that included as many test trials from the new units as reasonable. In contrast, if the 10.9% limits were centered around the average of all responses, the Calspan unit would have failed to qualify in all trials.

In summary, the agency analyzed the data from the testing of the seven Q3s units (the four NHTSA-owned units and the three new units) to the qualification tests proposed in the NPRM, assessing, among other matters, the measurements made by the units when tested to the qualification tests and the R&R of the dummies. Tests were run for both right and left side impacts. Average, standard deviation, and coefficient of variation were computed for each required measurement parameter of each qualification procedure.

c. Head

The head injury criterion (HIC), based on the Q3s's head acceleration, has been proposed as a criterion in the FMVSS No. 213 side impact NPRM and is important for assessing countermeasures that protect the child's head in side impacts. Thus, a uniform response of the dummy's head-neck system is important to achieve. Two qualification tests serve to assure the uniformity of the head response in an impact: A lateral head drop test and a frontal head drop test. In both qualification tests, the pass/fail specification is based on the resultant acceleration measured at the center of gravity (CG) of the head. Procedures for both tests also place limitations on the off-axis acceleration to assure that the free-fall of the head is uniform prior to impact.

Lateral Head Drop

The lateral head drop test is carried out by cradling the head within a looped wire rope, suspending the head 200 mm above a steel plate, and releasing the wire rope. The head is oriented within the cradle so that its lateral aspect strikes the plate. Lateral impacts are carried out on the left and right aspects of the head.[40]

The NPRM proposed that the head must respond with peak resultant acceleration between 113 g and 140 g when dropped from a 200-mm height such that the side of the head lands onto a flat rigid surface (lateral head drop). Off-axis acceleration was proposed to be +/−20 Gs. These values were based on tests of NHTSA's four Q3s dummies.

For the final rule, NHTSA has set the lateral qualification limits as: Peak resultant acceleration is 114–140 Gs (spaced 10.2% from the range's midpoint of 127 Gs). Off-axis acceleration: +/−15 Gs. These values are based on tests of the seven Q3s dummies.

Test Repeatability. Test repeatability problems became apparent once the agency began to assess lateral head drop data from the outside labs. NHTSA believes that the problem existed even at the time of the NPRM as many of the CVs reported in the NPRM were just under 5%, which, upon reexamination, were high for such a simple test. None of the CVs for the frontal head drop was over 2 percent.

The problem was first discovered in the initial tests performed at MGA on serial no. 007. Fourteen trials were needed to attain the desired sample of ten trials (five left, five right) in which the off-axis acceleration was under the NPRM's requisite 20 Gs (and only three of those were under 15 Gs). The CV for the resultant head acceleration was over 8% in the trial tests, which is unacceptably high.

The variability was eventually traced to MGA's head drop apparatus. MGA had used a one-piece cable loop to cradle the head, and the cradle was released via a magnetic actuator. Upon release, the head rotated slightly during its free-fall creating elevated off-axis accelerations and high variability in the resultant accelerations.

For its subsequent series of tests on serial nos. 008 and 5680, MGA developed an improved test protocol that included a two-cable cradle that mitigated the problem. Off-axis acceleration was below 20 Gs in all twenty trials and below 15 Gs in sixteen of the trials.[41]

Calspan had similar difficulty with its drop apparatus, which made use of a pneumatic actuator to release the cradle. In its initial tests, Calspan needed nineteen trials to attain the desired sample of 5 left and 5 right trials with an off-axis acceleration under 20 Gs. However, like MGA, Calspan could achieve the 20 G limit in their subsequent series (with ten trials each with serial nos. 008 and 059).

At VRTC, the cradle was released by cutting the end of the cable. There were no problems with keeping the off-axis accelerations below 20 Gs, though in retrospect it was still unusually high for such a simple test (the average was 12 Gs, with a range of 7–18 Gs).

High off-axis acceleration was particularly problematic for serial no. 007 (one of the older, NHTSA-owned units) at all four labs where it was tested (53 trials total). NHTSA observed that the flesh parting line[42] on the head coincided with the point of impact, causing added variability for that particular unit (the effect was more pronounced with serial no. 007 than with other dummies.) About half of the tests with no. 007 produced off-axis accelerations greater than 15 Gs, with 13

[40] Cradling of the head is shown in the regulatory text figures, but specifics on how to release the head are left to the operator.

[41] The cradle problem at MGA highlighted the need for a drop test mechanism with a high degree of precision. Any slight deviation in the point of impact was shown to produce a large variation in both the resultant and off-axis acceleration. This was particularly true in the lateral head drop, where the curvature of the head at the point of impact contributes to the variation.

[42] When two halves of a mold meet, the corresponding line or seam appearing on the molded object is referred to as the parting line.

tests (21%) greater than 20 Gs. Just 14 tests were less than 10 Gs.

When data from VRTC, Calspan, and HIS were further examined, it became apparent that elevated off-axis acceleration was correlated with high variability in the resultant acceleration. The scatter in data is evident in Table 6 (which represents all dummy tests, not just serial nos. 007 and 008). The CV in the resultant acceleration is shown to increase when the off-axis acceleration falls in higher ranges. It is highest (10.24%) when the off-axis acceleration is above 15 Gs and it is lowest (4.04%) when under 10 Gs. In the ranges of 0–10 Gs, 0–15 Gs, and 10–15 Gs, the CVs are all about the same and all under the 5%. Thus, NHTSA concludes that 15 Gs is a more appropriate limit than 20 Gs.[43]

TABLE 6—RELATIONSHIP BETWEEN OFF-AXIS ACCELERATION AND VARIABILITY IN RESULTANT ACCELERATION

Off-axis acceleration, Gs	Number of trials	Resultant acceleration	
		Limits, % of midpoint	CV (%)
0–5	0		
0–10	21	7.7	4.04
0–15	84	10.2	4.47
10–15	64	10.2	4.58
0–20	114	16.2	6.38
10–20	94	16.2	6.71
15–20	30	16.2	9.20
Over 15	34	18.4	10.24
All	118	18.4	7.34

For this final rule, NHTSA has set the limit for off-axis acceleration to +/− 15 Gs. NHTSA notes that this limit is the same as those for the two other part 572 side impact dummies (Subpart U—ES–2re (50th percentile adult male) and Subpart V—SID–IIsD (small adult female)). NHTSA believes the 15 G limit (as opposed to an even lower limit) is sufficient to assure dummy uniformity, and that lowering it to a lesser value is needlessly onerous on test labs because it will likely require many more trials to achieve acceptable test results. Unlike a frontal drop, where the direction of the drop is symmetric with the sagittal plane of the head, the lateral drop is asymmetric, making it difficult to attain an off-axis acceleration below 10 Gs.

When only those tests where the off-axis acceleration was under 15 Gs were included, the CVs for repeatability and test reproducibility for the peak resultant acceleration were all 5% or less at all labs with all Q3s dummies.

The agency notes that attaining the requisite +/− 15 G may require multiple drop tests. Nonetheless, in NHTSA's test program all labs could eventually attain this limit with each dummy they tested. Moreover, NHTSA believes it would be a relatively simple matter for labs to come up with a way to run the test such that the head does not slip and turn during its free fall, which should enable them to meet the 15 G off-axis limit without difficulty.

Dummy Reproducibility. When assessing dummy reproducibility in the lateral drop test, for the reasons stated above the agency also omitted drop tests where the off-axis head acceleration is greater than 15 Gs, and the tests at MGA on serial no. 007. There was still an ample number of trials (84) without those tests to make a reasonable assessment of dummy reproducibility.

The CVs for dummy reproducibility in lateral head drop tests at the various labs ranged for 7.0% to 11.7%, which reflects a fairly wide range of head acceleration responses. Nonetheless, the qualification criteria are set at 114–140 Gs, which reflects the upper and lower limits spaced only 10.2% from the midpoint.

NHTSA concludes that the qualification limit of 10.2% is appropriately balanced to accommodate dummy reproducibility without being unreasonably hard for test labs to attain. The narrowness of the final limits is also consistent with other part 572 dummies, as shown in Table 7 below, and is needed to assure a sufficient level of uniformity in head response. As stated above, the head's acceleration is an important criterion for assessment of head injury. Thus, the acceptance criteria should be narrow enough to achieve a uniform response of the head-neck system of the Q3s.

TABLE 7—ACCEPTANCE CRITERIA FOR RESULTANT HEAD ACCELERATIONS IN HEAD DROP TESTS FOR VARIOUS ATDS

Dummy	Aspect	Resultant head acceleration		
		Lower limit, G	Upper limit, G	+/− % of midpoint
Q3s (final rule)	Lateral	114	140	10.2
Q3s (proposed)	Lateral	113	140	10.7
Side Impact Dummy Crash Test Dummy, Small Adult Female (SID–IIsD)	Lateral	115	137	8.7
Side Impact Crash Test Dummy 50th Percentile Adult Male (ES–2re)	Lateral	125	155	10.7
Q3s (final rule)	Anterior	255	300	8.1
Q3s (proposed)	Anterior	250	297	8.6
Hybrid III (HIII) 3-Year-Old Child Crash Test Dummy (HIII–3C)	Anterior	250	280	5.7
Six-year-old Child Test Dummy (HIII–6C)	Anterior	245	300	10.1
HIII 10-Year-Old Child Test Dummy (HIII–10C)	Anterior	250	300	9.1

[43] All NPRM upper/lower limits, including 20 Gs, were derived from the statistics of the tests. With the further data obtained in the post-NPRM program, NHTSA has determined that 20 Gs was too broad.

TABLE 7—ACCEPTANCE CRITERIA FOR RESULTANT HEAD ACCELERATIONS IN HEAD DROP TESTS FOR VARIOUS ATDS—Continued

Dummy	Aspect	Resultant head acceleration		
		Lower limit, G	Upper limit, G	+/− % of midpoint
HIII 5th Percentile Adult Female (frontal) Test Dummy	Anterior	250	300	9.1

NHTSA observed that the envelope of 114–140 Gs reflects the data from all the considered tests of the Q3s, but that two of the three newest dummies, those owned by Calspan and Britax, registered high head acceleration responses relative to NHTSA's older units and the newer MGA unit. NHTSA had to decide how to set the qualification limits for the head given the differences in dummy head performance.

If NHTSA had set qualification limits to include at least one test trial from all dummies tested (the NHTSA-owned units and the three newer units), limits greater than 13% would have resulted. The agency was concerned that such limits would be too wide for regulatory purposes, especially because the Q3s's head acceleration measurements would probably determine a pass or fail in any future application of the dummy. No other part 572 ATD has limits wider than 11% for a head drop test (anterior or lateral).

The agency also considered the possibility of calibrating the limits around the new units (which generally produced higher head accelerations) even though one or more of the NHTSA-owned units may not be able to qualify. When only the three new units were considered (combining data from tests at VRTC, MGA, HIS, and Calspan), limits within 11% were possible.

After further investigation, however, NHTSA decided against this alternative too. The agency's first step in assessing whether to use only the new units was to assess the biofidelity of the new Q3s units. When the agency assessed the head of the Britax unit (which produced the highest response) against the biofidelity targets to confirm that it was within the limits of acceptability, the agency found it was not. The limits of biofidelity acceptance are generally wider than qualification limits owing to the variability associated with human subjects. As explained in the NPRM, the test to assess lateral biofidelity is slightly different from the qualification test (78 FR at 69949). Derived by SAE (Irwin, et al, 2002), the target response is referenced from the non-fracture zone of the head (opposite the point of impact). For a 3-year-old, the target resultant acceleration is 114–171 Gs.

The test results for the NHTSA-owned units fell squarely within these limits. For the Britax unit, however, the tests produced a resultant acceleration of 189 Gs, which is well beyond the limits of acceptability. Thus, if the qualification limits were recalibrated around the newer units, the limits would be set based on readings of a non-biofidelic dummy. NHTSA decided that such an approach would sacrifice dummy biofidelity and is unacceptable.

Accordingly, NHTSA decided that the final acceptance criteria for the lateral head drop qualification test should be centered around essentially the same midpoint as the NPRM. Thus, all NHTSA-owned units remain centered within the limits of acceptability. There is no potential sacrifice in biofidelity, unlike the result if limits were established around non-biofidelic Q3s units.

NHTSA notes that, under the qualification limits of this final rule, a ''pass'' was observed with the older NHTSA-owned units at all labs and in almost every trial. Newly-manufactured Q3s dummies, on the other hand, did not always qualify. Of the three new units tested, only the MGA unit consistently produced a passing result against the final qualification criteria. The Britax unit was well above the upper limit, a result that was observed repeatedly in all trials at both labs in which it was tested. The Calspan unit was borderline acceptable. HIS had reported responses within the limits, but Calspan was not able to consistently produce a passing result at its lab. Given these results, there is a possibility that some dummy heads of newer Q3s units in the field may need to be re-worked to pass the lateral head drop criterion of this final rule.

Frontal Head Drop

The NPRM proposed that the head must respond with peak resultant acceleration between 250–297 Gs (8.6% of the midpoint) when dropped from a 376 mm height. The head is oriented such that its sagittal plane is parallel with the direction of impact and the anterior-most aspect of the forehead strikes a steel plate. Off-axis acceleration was proposed to be +/−15 Gs. These values were set based on tests of NHTSA's 4 Q3s dummies.

For the final rule, NHTSA has set the frontal qualification limits as: Peak resultant acceleration is 255–300 Gs (8.1% of the midpoint). Off-axis acceleration: +/−15 Gs (no change from NPRM). These values are based on tests of the seven Q3s dummies.

Test R&R. The CVs for test R&R were universally low at all labs and for all dummies (all below 4%). Unlike a lateral drop, the motion in the head in the frontal drop is symmetric about the sagittal plane, *i.e.,* rotation of the head during and after the impact takes place about the y-axis only. This makes it much easier to produce a repeatable response and to attain a low off-axis acceleration. In the NPRM, the off-axis limit for acceleration was only 15 Gs (vs. 20 Gs for the lateral drop). The 15 G off-axis limit was easily met at all labs with all dummies. NHTSA notes that the 15 G limit for frontal drops is also consistent with other part 572 dummies, as shown previously.

Dummy Reproducibility. For the frontal drop test, the CVs for dummy reproducibility were under 6% for all but one dummy—serial no. 5860, the MGA-owned unit. Relative to the others, the MGA head registered low responses at both labs (HIS and MGA) where it was assessed, resulting in an elevated CV statistic of 8.0% at HIS and 5.4% at MGA. If only the new units are considered (combining data from tests at VRTC, MGA, HIS, and Calspan), the CV statistic is 6.8% for all three units vs. 3.4% when the MGA unit is excluded. The Britax and Calspan units had high responses in the lateral drop tests but were in line with each other and with NHTSA's older units in the frontal head drop test.

The lower limit of 255 Gs coincides with the lower limit of an acceptable biofidelic response as described in the NPRM.[44] At this limit, the MGA unit did not qualify in any of its seven trials at either of the two labs where it was tested (HIS and MGA), as its response was too low. The highest response it produced in any of the trials was 242 G,

[44] ''Biofidelity Assessment of the Q3s Three Year-Old Child Side Impact Dummy,'' *supra.*

well below the biofidelity target. This response is unacceptably low (non-biofidelic). Aside from the MGA unit, only the Calspan unit was at all marginal. Its response was borderline low in tests at HIS (253 Gs on average), but at Calspan it was squarely within the limits.

NHTSA's final upper limit of 300 Gs (raised from 290 Gs in the NPRM) is still well within the acceptable biofidelity limit of 315 G. There were no problems staying under the upper limit for any dummy in any trial at any lab. By raising the upper limit to 300 Gs, NHTSA is maintaining essentially the same limit widths (8.1% of the midpoint) as those proposed in the NPRM.

As noted above, a uniform head response for the Q3s is particularly important to assess child side impact protection. Thus, NHTSA has set the resultant acceleration limits for the frontal head drop narrower than the 11% guideline target for all responses. This approach is consistent with other part 572 dummies. The Q3s width of 8.1% (*i.e.,* the +/− limits of the nominal qualification target) is roughly the equivalent to the average of the other dummies.

d. Neck

A biofidelic and repeatable kinematic response of the head-neck system is important to quantify the protection offered by CRSs in an impact. The acceptable criteria for the neck qualification test in this final rule consist of three test components: Lateral flexion, frontal flexion, and torsion neck pendulum tests. These tests serve to assure uniformity of the head kinematics in both a head impact and non-impact. In each test, the neck moment, the rotation of the neck, and the timing associated with the moment and rotation are assessed. All three use the conventional part 572 swinging pendulum to apply a prescribed impulse to the neck, with a headform designed to mimic the inertial properties of the head attached to it.

Lateral Flexion

The lateral flexion test specifies a 3.8 m/s impact speed with a prescribed deceleration pulse. A column of collapsible aluminum honeycomb is used to decelerate the pendulum at a relatively constant level of force. Part 572 specifications for almost all other dummies use the pendulum/honeycomb device for testing necks. Test labs generally adjust the honeycomb in some manner (for instance, by modifying the number of cells engaged by the impacting face of the pendulum) to attain the prescribed pulse.

The NPRM proposed a maximum rotation of 77–88 degrees (6.7% from the midpoint). The maximum moment was proposed to be 25–32 Nm (12.3% of the midpoint).

This final rule sets the maximum rotation at 76.5–87.5 degrees (6.7% of the midpoint). The maximum moment is set at 25.3–32.0 Nm (11.7% of the midpoint).

Test R&R and Dummy Reproducibility. All four labs exhibited CVs below 5% for test repeatability in lateral flexion for both the rotation and the moment.

NHTSA did, however, observe some lab-to-lab variability in the bending moment which resulted in CVs for test reproducibility that ranged from 6.3% to 7.2% for both Q3s units that were used in the assessment. This was not entirely unexpected.[45] The variability in test reproducibility is likely attributed to lab-to-lab differences in the aluminum honeycomb, such as the lab modifications of the number of honeycomb cells used in the qualification tests. Also, after impact, the trajectory of the headform does not occur within a single plane of motion because the neck bends along its non-symmetric axis. This generally reduces test reproducibility.

The agency did not discern any trends that would indicate that the responses of the necks have changed over time. Also, the CVs were under 5% for test reproducibility and under 6% for dummy reproducibility for all measures of neck rotation and neck moment. This further suggests that the variability is due to the variability in test equipment (*i.e.,* honeycomb) among the various labs.

In summary, all dummies and all labs could demonstrate a qualification pass for both rotation and moment. The results show that the necks themselves were highly uniform, but test labs may need to evaluate different honeycomb configurations to demonstrate a passing response. Experimenting with honeycomb is typical of the qualification process with all part 572 dummies.

Frontal Flexion

The NPRM proposed a maximum rotation of 70–82 degrees (7.9% of the midpoint), and a maximum moment of 41–51 Nm (10.9% of the midpoint).

For the final rule, the acceptance criteria for the frontal flexion test are set as: Maximum rotation is 69.5–81.0 degrees (7.6% of the midpoint). The maximum moment is 41.5–50.7 Nm (10.0% of the midpoint). The frontal flexion test specifies a 4.7 m/s impact speed and its own deceleration pulse. Crushing of aluminum honeycomb is also used to generate the prescribed deceleration pulse.

Test R&R and Dummy Reproducibility. The CVs for test R&R and dummy reproducibility were universally low at all labs and for all dummies and for both neck rotation and neck moment (all below 4%). Unlike the lateral and torsion tests, the motion in the headform in the frontal flexion test is symmetric about the sagittal plane. In other words, rotation of the headform during and after the impact takes place about the y-axis only. This makes it much easier to produce a repeatable response and to attain a low off-axis acceleration.

For the neck flexion test, the wide intervals specified in the NPRM (built around 3 standard deviations) proved to be unnecessarily large, even with the latest results from the additional dummies tested at different labs added to the data pool. Therefore, NHTSA has narrowed the limits for the final rule from those of the NPRM. All dummies at all labs were demonstrated to pass at the narrower limits of the final rule.

Torsion

During CRS testing, the Q3s neck might flex with varying degrees of neck twist. The agency, therefore, proposed a procedure to assure that the neck is uniform under twist. The proposed neck torsion test uses a special test fixture attached to the part 572 pendulum, which imparts a pure torsion moment to the isolated neck. It specifies a 3.6 m/s impact speed with a defined deceleration pulse. Qualification is based on the rotation and moment about the long axis of the neck.

The NPRM proposed that, for the neck torsion test, the maximum rotation must be 75–93 degrees (10.7% of the midpoint). The maximum moment is 8.0–10.0 Nm (11.1% of the midpoint).

For this final rule, the final acceptance criteria for the qualification test are set as follows. The maximum rotation limits are 74.5–91.0 degrees (10.0% of the midpoint). The maximum moment limits are 8.0–10.0 Nm (11.1% of the midpoint) (unchanged from the NPRM).

Test R&R and Dummy Reproducibility. All four labs exhibited low CVs for test repeatability and reproducibility for both the rotation and the moment, with one exception. At MGA, the variability in neck moments

[45] In the NPRM, the set of limits for the moment was constructed via the +/−10% rule rather than +/−3 standard deviations.

on serial no. 007 was slightly elevated (CV=5.9%) for the left aspect only. However, this elevation is mostly a function of the low moment generated by the test (only 9 Nm nominally), where variations as little as +/−1 Nm created a high CV. All moments were, in fact, within the prescribed, and narrow, 8–10 Nm range specified in the NPRM. The CVs for dummy reproducibility were universally low (below 6%) at all labs and for all dummies, and for both neck rotation and neck moment. In every trial, all dummies at all labs demonstrated a pass in accordance with the acceptance criteria of this final rule.

e. Lumbar Column

The Q3s's rubber lumbar column bends during a CRS side impact test. This bending can affect the overall kinematics of the dummy, including the excursion of the head. It can also affect lateral loads and the deflection of the thorax.

Lumbar qualification consists of two types of pendulum tests: A lateral test and a frontal test. For both tests, the lumbar spine element containing the flexible column is removed from the dummy, like the neck qualification tests. The lumbar tests use the same part 572 swinging arm pendulum and the headform device used in the neck qualification tests. The headform is not intended to represent the inertial properties of a body region as it is with the neck tests. Rather, it merely provides an apparatus that helps to ensure a repeatable test condition. The lumbar tests also use crushable aluminum honeycomb to attain a prescribed deceleration pulse.

In the case of the lumbar qualification, lateral and frontal tests are conducted at the same impact speed of 4.4 m/s and specify the same pendulum impulse. The rotation of the lumbar column, the lumbar moment, and the timing associated with the moment and rotation are set forth in this final rule.

The agency notes that the lumbar qualifications for lateral and frontal tests are almost identical. This is to be expected since the lumbar element is a circular cylinder constructed from an isotropic material (rubber), and so, theoretically, the directional properties should be the same for lateral vs. frontal bending. However, the agency has established two separate sets of acceptance criteria owing to possible dissimilarities brought on by the molding and bonding processes and asymmetries of inertial influences due to differences in the configuration of mounting plates and headform.

Further, the frontal flexion test helps assure that the metal-to-rubber bond of the lumbar is intact in a manner the lateral flexion test does not. This was demonstrated during the very last series of tests on NHTSA-owned serial no. 008 Q3s dummy, where NHTSA observed a slight separation after the first of five trials. The subsequent trials all produced a rotation failing the limits of the NPRM and the final rule, whereas lateral flexion tests performed on the damaged part resulted in passes. That is, the frontal test detected the tear in the part, whereas the lateral test did not.

Lateral Flexion

This test mimics the main bending direction of the Q3s's torso during a CRS side impact test as proposed in the FMVSS No. 213 upgrade. This test assures uniformity in such bending.

The NPRM proposed a maximum rotation of 47–59 degrees (11.3% of the midpoint). The maximum moment was proposed to be 78–97 Nm (10.9% of the midpoint).

This final rule sets the maximum rotation at 46.1–58.2 degrees (11.6% of the midpoint). The maximum moment is set at 79.4–98.1 Nm (10.5% of the midpoint).

Test R&R and Dummy Reproducibility. At all four labs, the CVs for test repeatability and test reproducibility were below 5% and 6%, respectively, for both the rotation and the moment with all dummies. For dummy reproducibility, however, the CVs were above 6% at two of the labs. Tests revealed that two of the newer units, the Britax-owned unit (tested at VRTC) and the MGA-owned (tested at MGA), produced greater rotations than the older NHTSA-owned units. As a result, the CVs for dummy reproducibility in lumbar rotation at VRTC and MGA were 6.5% and 7.4%, respectively.

All dummies at all labs were demonstrated to pass the qualification limits of this final rule. The margins for acceptance are essentially the same as those of the NPRM, but the midpoints for both rotation and moment have been shifted slightly downward for rotation and upward for moment.

Frontal Flexion

The proposed FMVSS No. 213 side impact test is carried out at a slight oblique angle. Typically, the torso of the Q3s bends laterally and slightly forward, so NHTSA has included a frontal (forward) component to the lumbar qualification.

The NPRM proposed a maximum rotation of 48–57 degrees (8.6% of the midpoint) in the NPRM. The maximum moment was proposed to be 78–94 Nm (9.3% of the midpoint).

This final rule sets the maximum rotation at 47.0–58.5 degrees (10.9% of the midpoint). NHTSA set the maximum moment at 78.2–96.2 Nm (10.3% of the midpoint).

Test R&R and Dummy Reproducibility. The CVs for test repeatability and reproducibility were under 5% and 6%, respectively, at all labs and all dummies for both rotation and moment. However, the new MGA-owned unit produced consistently higher rotations than the two NHTSA-owned units, resulting in a CV of 8.0% for reproducibility of the dummy's lumbar in rotation. At VRTC, the new Britax-owned unit had rotations that were also high, resulting in a CV dummy reproducibility score of 6.6%. At Calspan, its new unit produced consistently higher lumbar moments than the two NHTSA-owned units. Thus, the Calspan CV score for dummy reproducibility of the lumbar moment was elevated (7.7%).

All dummies at all labs were demonstrated to pass the qualification limits of this final rule. In setting the new limits, NHTSA has slightly widened the margins for acceptance relative to the NPRM for both rotation and moment to accommodate the newer units. In both instances, the margins are still under the 11% goal.

Timing Specifications Associated With Lumbar Qualification

All pendulum tests for the lumbar column have specifications on the time at which the maximum moment and maximum rotation occur. The agency has revised the way signal timing is assessed for the lumbar column and neck qualification tests and has slightly increased the time that it takes the lumbar column (or neck) to return from its position at peak rotation to the position of zero rotation. The discussion of those issues can be found in the section below.

Timing Specifications Associated With Neck and Lumbar Qualification [46]

1. Maximum Moment and Rotation

All pendulum tests for the neck and lumbar column place specifications on the time at which the maximum moment and maximum rotation occur. This final rule revises the way signal timing is assessed.

The test data indicate that the proposed time specifications were generally met. There were only a few

[46] The following discussion also applies to the timing specifications for the lumbar column qualification tests.

instances where the peak time was just under or just over the prescribed interval. All the tests would have met the time specifications if the intervals were expanded by just 1 ms, except for the time specification for the maximum moment in the neck lateral flexion test (see Table 8 below). Here, 60 trials (about half of all trials) were below the NPRM lower limit. However, for this test, the range of allowable times was only a 7 ms interval, whereas the intervals in the other four tests ranged from 11 to 20 ms.

The 7 ms time interval was very narrow because, along with all qualification intervals proposed in the NPRM, it was derived solely from the statistics of the then-available test data. The interval of 7 ms represented three standard deviations from the mean of data gathered during the NPRM stage. The very narrow time interval was the result of running the tests at a single lab (VRTC) under highly similar impulses and using aluminum honeycomb from a common lot.

TABLE 8—NPRM TIME SPECIFICATIONS FOR NECK AND LUMBAR QUALIFICATION TESTS

Qualification test	NPRM time specifications		Number of trials with a time that differed from the NPRM time specifications	
	Max. rotation (ms)	Max. moment (ms)	Max. rotation (ms)	Max. moment (ms)
Neck frontal flexion	55–63	49–62	1	0
Neck lateral flexion	65–72	66–73	0	60
Neck torsion	91–113	85–105	0	2
Lumbar frontal flexion	52–59	46–57	2	1
Lumbar lateral flexion	50–59	46–57	0	1

The agency's latest pooling of test data reveals that the timing disparity in the neck lateral flexion test is related to lab-to-lab variability, not to test repeatability or dummy repeatability. For any given lab, the times are clustered within a very narrow interval of about 6 ms for all trials of all dummies tested at that lab. Thus, the timing discrepancy appears to be related to the test protocol, not dummy reproducibility.

Time specifications in final rule. NHTSA could have expanded this interval by 6 ms (which would have put it in line with the other intervals in part 572), which would have resulted in a pass for all trials. However, rather than adjusting the NPRM time interval in that way, the agency has adjusted the way signal timing is assessed. For the final rule, the agency has adopted the same performance specification that is used for other part 572 child dummies (Subpart N—HIII–6C; Subpart P—HIII–3C; Subpart T—HIII–10C).[47] Instead of using time t = 0 as a reference for the maximum moment, the final rule specifies a range for the peak moment during the time interval when the rotation is above a specified limit. For neck flexion, the regulatory text specifies that Plane D, referenced in Figure W3 of Part 572, shall rotate in the direction of pre-impact flight with respect to the pendulum's longitudinal centerline between 69.5 degrees and 81.0 degrees and that, during the time interval while the rotation is within these angles, the peak moment measured by the neck transducer shall have a value between 41.5 N-m and 50.7 N-m.

Similar wording is used for the neck lateral, neck torsion, lumbar frontal, and lumbar lateral tests. All dummies passed the time specifications at all labs in all trials using this approach.

This revised specification for the timing is better than what was proposed in the NPRM because lab technicians following the procedure would not have to pinpoint time = 0 as specified in the NPRM. In the NPRM, time t = 0 is defined as: ''All instrumentation data channels are defined to be zero when the longitudinal centerline of the neck and pendulum are parallel.'' In practice, determining the instant at which the parallel alignment occurs can be challenging, and has a significant bearing on a pass vs. fail outcome (as shown by the post-NPRM data, where it was not unusual that a pass vs. fail outcome was determined by less than 1 ms). Referencing a particular data point (the point of maximum rotation) identifies the reference time with greater precision.

2. Decay Times

The specification for decay time specifies the time that it takes the neck or lumbar column to return from its position at peak rotation to the position of zero rotation. This specification is included in all other part 572 dummies mentioned previously. It serves to assure uniformity of the hyperelastic material used to construct the neck (or lumbar column). It also ensures that the later part of the impulse brought on by the collapse of the aluminum honeycomb structure is uniform.

The NPRM proposed decay times listed below in Table 9. In about 15% of the post-NPRM trials, the NPRM decay times were not met for neck and lumbar frontal flexion. Expanding the NPRM decay interval by only a few milliseconds results in PASS in all trials for all dummies at all labs.

TABLE 9—Q3S MOMENT DECAY TIMES FOR NECK AND LUMBAR QUALIFICATION TESTS

Test	NPRM decay time, ms	Final rule decay time, ms	Number of trials that differed from the NPRM decay time specifications
Neck frontal flexion	50–54	45–55	10
Neck lateral flexion	63–69	61–71	0
Neck torsion	84–103	85–102	0

[47] Subpart N, Six-Year-Old Child Test Dummy, Beta Version (HIII–6C); Subpart P, Hybrid III 3-Year-Old Child Crash Test Dummy, Alpha Version (HIII–3C); Subpart T, Hybrid III 10-Year-Old Child Test Dummy (HIII–10C).

TABLE 9—Q3S MOMENT DECAY TIMES FOR NECK AND LUMBAR QUALIFICATION TESTS—Continued

Test	NPRM decay time, ms	Final rule decay time, ms	Number of trials that differed from the NPRM decay time specifications
Lumbar frontal flexion	50–56	49–59	11
Lumbar lateral flexion	47–59	48–59	0

Decay time in final rule. The decay intervals for the final rule are listed in Table 9. In qualification tests for other part 572 dummies, the intervals for neck decay times ranged from 10 to 35 ms. NHTSA considers 10 ms a practical lower limit on the interval, accounting for the precision of the measurement system of any given lab. Thus, the decay times have been adjusted so that the intervals are no narrower than 10 ms. With these time intervals, all dummies met the decay time interval at all labs in all trials.

f. Shoulder

This test assures that the shoulder acts uniformly in the way it deforms under load and distributes the load under a lateral impact during CRS testing, thus helping to ensure that whole-body kinematics are consistent.

Shoulder qualification is accomplished with a lateral impact to the shoulder using a 3.8 kg probe at an impact speed of 3.6 m/s. Conformity is based on the maximum probe force and the maximum deflection of the shoulder, as measured by a potentiometer installed within the dummy.

The NPRM proposed that the peak probe force must be 1240–1350 N (4.3% of the midpoint), and that maximum displacement of the shoulder must be 16–21 mm (13.5% of the midpoint).

This final rule sets the peak probe force to be 1123–1437 N (12.3% of the midpoint). Maximum shoulder displacement is 17.0–22.0 mm (12.8% of the midpoint).

Test R&R and Dummy Reproducibility. The CVs for test repeatability and reproducibility were below 5% and 6%, respectively, for the measurements of probe force and shoulder displacement with all dummies at all labs.

However, compared to the other three labs, the probe forces in tests at HIS were consistently higher for the newer dummies, whereas for the older NHTSA units, test repeatability at HIS had noticeably more scatter. This trend may have been related to arm positioning. During the latest testing series, NHTSA realized that, contrary to the agency's intent, the Q3s's upper arm can meet the position setting described in the NPRM in both medial/lateral rotation and in ab/adduction. In other words, the NPRM did not specify a unique position for the upper arm. To address this, in the final rule, there are more instructions in the dummy positioning procedure for the shoulder test as to where to position the Q3s's elbows and arms. This simple step should result in better R&R of the qualification test.

The CV for dummy reproducibility of the shoulder force was elevated in three of the assessments (ranging from 6.1% to 7.8%). Two of the newer units—5860 owned by MGA and 059 owned by Calspan—were different from the others in that they produced lower probe forces, particularly for the left aspect. This has resulted in slightly expanded qualification limits for the shoulder.

While the limits for probe force have been widened, the midpoint is essentially the same. At 12.3%, the limits are now wider than the 11% goal, but still considerably narrower than those of other part 572 side impact dummies (the limits for the ES–2re and SID–IIsD are both 16%).[48] Also, there is no immediate injury reference value directly related to the shoulder in the proposed FMVSS No. 213 side impact test, so its uniformity is less important.

For shoulder deflection, the range of the limits is essentially the same as those of the NPRM, but they have been shifted upward to allow greater deflection. NHTSA considers this an improvement to the specification. From a biofidelity standpoint, the shoulder is stiff relative to a human. Shifting the deflection limits upward (rather than downward) is consistent with a more biofidelic response. The 12.8% shoulder deflection limits sound relatively wide, but are not of concern because they are a function of the low level of deflection seen in the test (only 17–22 mm). This 5 mm interval is lower than that of any deflection-based limit of any other part 572 dummy (several dummies have limits with 6 mm intervals).

Almost all dummies at all labs met the probe force and shoulder displacement criteria of this final rule. The only exception was with the probe force on the left aspect of the MGA unit. In all trials run at MGA, the force was well below the qualification limits, so it is possible the dummy may need some remedial work, *e.g.,* a part replacement or some other fix. On the other hand, the dummy's response was well-centered between the limits in trials at HIS, so the MGA results could have resulted from a problem with the test set up or position of the arm.

g. Thorax

The response of the thorax under lateral loading is a high-priority performance target for the Q3s because thorax deflection is an injury reference measurement in the proposed FMVSS No. 213 side impact test. Qualification of the thorax is carried out under two separate conditions: Without arm interaction (a test probe strikes the thorax directly); and with the arm in place (with the elbow lowered so that the probe strikes the upper arm).

Thorax Without Arm

The ''thorax without arm'' test assures uniformity of the thorax structure, including its mount to the spine, and its response to a direct impact in terms of rib deflection. For this test, the arm is completely removed from the dummy. The test is carried out by striking the dummy on the lateral aspect of the thorax with a 3.8 kg probe at a speed of 3.3 m/s. Conformity is based on the probe force and the thorax displacement as measured by an IR–TRACC[49] mounted within the dummy's chest cavity.

[48] The NPRM limits for probe force were at 4.2%, but they were unusually narrow, even considering that all data was gathered at a single lab (VRTC). There is no limit narrower than 5% for any part 572 qualification requirement (displacement or otherwise).

[49] The Infra Red Telescoping Rod for Assessment of Chest Compression (IR–TRACC) is a device that measures deflection. It was developed by General Motors and is manufactured by HIS. NHTSA knows of no other suppliers of this device. On the other hand, there are no patents or restrictions that would prevent another company from manufacturing the device. Further, although the final rule specifically calls out the IR–TRACC, NHTSA would consider an amendment in the future to specify the use of an alternative device if one were developed that could sufficiently measure the thorax deflection as the IR–TRACC does. At this time no such device has been developed.

The NPRM proposed that the peak probe force must be 620–770 N (10.8% of the midpoint). The maximum displacement of the thorax was proposed to be 24–31 mm (12.7% of the midpoint).

This final rule sets the peak probe force to be 610–754 N (10.6% of the midpoint). Maximum thorax displacement is 24.5–30.5 mm (10.9% of the midpoint).

Test R&R and Dummy Reproducibility. The CVs for test repeatability and reproducibility were all below 5% and 6%, respectively, for the measurements of probe force and thorax displacement with all dummies at all labs. However, several of the CVs for dummy reproducibility were between 6% and 10%. The data showed that the new MGA and Britax units were stiffer than the other ATDs, resulting in higher probe forces and lower thorax displacements than the other dummies.

The high stiffness in the newer units is a major concern for NHTSA. Throughout the development cycle of the Q3s, the agency has stressed the importance of lateral thorax biofidelity.

In the NPRM, NHTSA demonstrated that thorax biofidelity was assessed through a series of pendulum impacts prescribed by SAE International. The probe force was used to assess the external biofidelity of the thorax, and upper torso (T1) acceleration was used to assess internal biofidelity. The tests showed that the units that NHTSA used to develop the NPRM (which included serial nos. 004, 006, 007, and 008) all performed very close to the biofidelity targets.

Given the thorax results with the MGA and Britax units, it was important to assess their performance against the biofidelity targets. NHTSA re-ran the biofidelity tests on two units: An older NHTSA-owned unit (serial no. 007) and the new, stiffer unit, the MGA-owned serial no. 5860. The tests on serial no. 007 served as a benchmark and again showed that it performed very much like it had during the NPRM stage (*i.e.,* close to the biofidelity targets). On the other hand, serial no. 5860 (the MGA unit) was barely within the margins for acceptable biofidelity. It exhibited elevated T1 acceleration and straddled the upper corridor of the target for the probe force but stayed within the corridor.

For the final rule, NHTSA formulated the acceptance criteria for the qualification test so that they stayed under the 11% goal for qualification limits. The nominal response of the MGA unit served as the upper limit since it met the biofidelity corridor. All responses generated in tests of the Britax unit fell outside the qualification limits, however. The probe responses in the Britax tests were well above the final upper qualification limit at both labs where it was tested (HIS and VRTC) for all trials, both right and left. It is also noted that the Britax unit's deflection was on the lower border of the final qualification limit for thorax deflection. The results of tests of the newer Britax unit show that its thorax was much too stiff. NHTSA considered this thorax substandard. In formulating the probe force limits for the thorax without arm test, the data from the Britax unit is not within the acceptance criteria.[50]

Thorax With Arm

The ''thorax with arm'' test loads the ribcage through the upper arm. It assures uniformity of the arm in the way the arm absorbs energy and interacts with the thorax in a lateral impact.

This test is carried out with the elbow lowered and the upper arm aligned with the dummy's thorax. The lower arm is positioned to make a 90° angle with the upper arm. (For this final rule, the added stipulation for upper arm positioning (discussed earlier in conjunction with the shoulder test) will be used in this test too, to help labs attain the specified response.)

The position of the 3.8 kg probe relative to the thorax is the same as in the ''thorax without arm'' test (the same probe is used as well). However, the impact speed of the probe for this ''thorax with arm'' test is 5.0 m/s (vs. 3.3 m/s). Conformity is again based on the probe force and the IR–TRACC's measure of thorax displacement.

The NPRM proposed that the peak probe force must be 1380–1690 N (10.1% of the midpoint). The maximum displacement of the thorax was proposed to be 23–28 mm (9.8% of the midpoint).

This final rule sets the peak probe force to be 1360–1695 N (11.0% of the midpoint). Maximum thorax displacement is 22.5–27.5 mm (10.0% of the midpoint).

Test R&R and Dummy Reproducibility. The CVs for test repeatability were below 5% for all assessments except one. At HIS, four separate repeatability assessments were scored based on tests with two NHTSA-owned units, serial nos. 004 and 007, with separate scores for right-side and left-side impacts. Three of the four produced CV scores below 5%. The fourth (on serial no. 007, right side) produced an elevated CV score of 9.3%, which was driven upward by greatly elevated probe forces in two of the six trials. HIS did not provide an explanation for the elevated force levels.

The CV for test reproducibility was below 6% in all instances except, again, for the probe force on the right side of serial no. 007. A CV score of 7.4% was driven upward by the same two trials discussed above. Without the two, the CV was 4.3%.

Dummy reproducibility ratings were elevated for this test (individual lab scores ranged from 11% <CV ≤15%). NHTSA's assessment revealed scatter in the measurement of probe force among the newer Q3s units. The lowest forces were generated by the Calspan-owned unit while the Britax-owned unit produced consistently high forces. Probe forces in trials with the MGA-owned unit were between those produced with the Calspan-owned and Britax-owned units, and in line with the older NHTSA-owned units.

The final qualification limits for the thorax displacement are essentially the same as those of the NPRM. At these limits (10% of the midpoint), all dummies were demonstrated to pass at all labs. NHTSA considers the acceptance interval of 5 mm (for the 22.5–27.5 mm limit) to be tight. As described earlier for the shoulder qualification (which also has a 5 mm interval), no other part 572 interval is less than 6 mm.

For the probe force, the final limits (1360–1695 N) have been expanded slightly from those of the NPRM (10.1% to 11%). However, they have been restricted to the 11% goal since the stiffness of the lateral aspect of the dummy can influence its interaction with a CRS in a side impact test.

This test has screened out some Q3s units from qualifying. Calspan could not qualify serial no. 059 (its own unit). All trials produced probe forces well below the 1360 N limit. The Britax-owned unit straddled the upper limit of 1695 N. The added stipulation for upper arm positioning should be beneficial in helping attain the specified response.

h. Pelvis

This test helps assure uniformity in the way the pelvis loads a CRS during a side impact test. The qualification test is carried out by striking the lateral aspect of the pelvis (near the hip) with a 3.8 kg probe at 4.0 m/s. (The probe is the same as that used in the shoulder and thorax qualifications.)

Conformity is based on the force measured by the impacting probe. The NPRM proposed that the peak probe force must be 1575–1810 N (7.1% of the

[50] Some already-purchased newer Q3s dummies in the field might have the overly stiff thorax. Users may have to remedy the part to pass the thorax without arm test.

midpoint). This final rule sets the peak probe force at 1587–1901 N (9.0% of the midpoint).

The NPRM had also proposed to limit the peak pubic load measured by a load cell within the dummy. The NPRM proposed that the peak pubic load be between 700–870 N (10.8% of the midpoint). As explained below, on further consideration, NHTSA has not adopted the pubic load criterion.

Test R&R and Dummy Reproducibility. For the probe force, the CVs for test repeatability were below 5% for all assessments at all labs. Essentially all dummies at all labs were demonstrated to pass the probe force limit. The only exception was with the right aspect of the serial no. 008 dummy, a NHTSA-owned unit. While in all trials run on this dummy at MGA the force was well below the lower qualification limit for probe force, the response for this dummy was well centered between the limits in trials at VRTC and Calspan. Thus, there may have been a test set up anomaly at MGA on serial no. 008, and the low forces caused two instances of elevated CVs for test reproducibility (7.6%) and dummy reproducibility (6.7%).

For the pubic load measurement, the CVs for test reproducibility and dummy reproducibility were mostly above 6% and as high as 15%. NHTSA analyzed the data and found sources for the variability in both the test procedure and in differences among the dummies.

The undesirable test reproducibility rating is most likely a consequence of striking the dummy at the hip over the ball and socket joint that joins the femur to the pelvis. The force generated by the probe is transmitted to the pubic load cell through this joint only. Since a ball joint exerts no reaction moments to restrict rotation, even if the dummy and probe are lined up precisely in the pre-test set up, upon impact there is little to control the rotation of the femur relative to the pelvis. Thus, the reaction force in the direction of the pubic load cell will have a relatively high degree of variability from one test set up to the next.

Further, differences in the construction of the dummy most likely exacerbated the variability related to striking the ball and socket joint. The test probe contacts the dummy on the surface of the femur, which is made largely of urethane and plastic. The femur bone itself is a plastic part (with a steel reinforcement) embedded within a thick molding consisting of urethane foam coved by a polyvinyl chloride (PVC) skin. By their very nature, these parts require much larger dimensional tolerances than metal parts and they have a much more variable response to impact. Furthermore, the relationship between the point of impact on the femur skin and the center of the femur head is loosely controlled (there is no dimensional requirement for this relationship on the engineering drawings).

Due to the elevated degree of variability associated with the pubic load, NHTSA has decided not to adopt the pubic load criterion in the final rule.[51] Uniformity in the pubic load is not a necessary qualification since it is not associated with any proposed injury assessment reference value in the FMVSS No. 213 rulemaking. Further, probe force—which NHTSA is adopting as a qualification—is a better measure of dummy loading to the child restraint system, which is the primary concern for the pelvis.

VII. Response to Comments (Part II) on the Acceptance Criteria and Test Procedures for the Qualification Tests

In this section, NHTSA responds to comments on specific aspects of the acceptance criteria and test procedures used for the qualification tests.

a. Head Qualification

Comment Received

Dorel stated that HIC signal data are not available to them for further analysis. Dorel also believed that the proposed limits of acceptability, 113–140 Gs for lateral acceleration, allow too wide of an acceptance band, thus creating what the commenter said was the potential for a high degree of HIC variability in CRS compliance testing.

NHTSA Response

NHTSA has provided data tables and plots of dummy instrumentation signals within supporting reports referenced in this final rule and in the NPRM.[52] The qualification report describes a series of sled tests with two Q3s units, serial nos. 006 and 007, in which each unit was tested five times in left side impacts under otherwise identical conditions. In these tests, the average HIC value was 700.4 with a CV of 2.4%.

In contemporary head qualification tests on the left aspect of these same units (five trials each), the CV of the resultant head acceleration was 2.97%, which is slightly greater than the HIC variability observed in sled tests. Therefore, in any future repeat testing of a particular CRS with multiple Q3s units, the variability seen in HIC values caused by slightly different dummy heads is expected to be no more than the variability allowed by the qualification limits of +/−10.2%. NHTSA views this level of variability as representative of a reasonable design margin. For example, to assure that HIC_{15} = 570 is not exceeded,[53] a manufacturer may need to design their CRS to achieve an average HIC value of only HIC_{15} = 517. This accounts for a possible outcome that might be 10.2% higher if a test is run with any other Q3s unit.

Thus, the agency does not agree there is a potential for a high degree of HIC variability in compliance testing. Furthermore, in the final rule, the limits on the resultant head acceleration in the lateral head drop test narrowed slightly (114–140 Gs) from those proposed in the NPRM (113–140 Gs). As discussed above, NHTSA has also narrowed the allowable off-axis acceleration to +/−15 Gs from +/−20 Gs in the NPRM. This change has a positive effect on assuring head uniformity in a lateral impact.

As stated earlier, the qualification limits of 114–140 Gs assure a sufficiently high level of uniformity in the responses of replicate dummies without being unreasonably hard for test labs to attain. The limits are also consistent with other part 572 dummies as shown previously (see Table 7).

Comment Received

Dorel commented on the data produced by the head drop tests and the duration of the impact event. It noted a variation in the duration of the acceleration of about 12% from the mean among the four heads that the agency tested. By showing that the duration of the acceleration seen in NHTSA's head qualification tests varies, Dorel surmised that the dummy head may produce variance in HIC that is unacceptably wide.

NHTSA Response

With regard to the duration of the impact event, the NPRM did not set a specification for the duration of the head drop acceleration, and no such specification exists for any other dummy within part 572. Such a specification is not needed because the

[51] By removing the pubic load requirement, the pubic load cell is no longer necessary and a ''blank'' structural replacement may be installed in its place.

[52] See ''NHTSA's Q3s Qualification Testing, 2014–2015, May 2016,'' in the docket for this final rule. The agency also generally provides qualification plots in NHTSA's compliance test reports for CRS testing. These reports are available for the public to download.

[53] Note that HIC15 = 570 is the pass/fail reference value proposed for the Q3s in NHTSA's NPRM to upgrade FMVSS No. 213 (see 79 FR 4570). It is also the pass/fail reference value for the Hybrid III 3-year-old dummy when assessing the deployment of air bags in FMVSS No. 208, ''Occupant crash protection.''

shape of the acceleration response produced by the head drop test is highly uniform among all heads. Also, the input energy changes very little from test to test because drop height and head mass are controlled tightly. Thus, a head acceleration response of lower magnitude will be longer in duration owing to energy conservation laws. Qualification is therefore based only on the magnitude of the head acceleration response; otherwise, the system would be over-constrained.

The head qualification test protocols (both for lateral and frontal) do not impose a rigorous time = 0 setting. Instead, the tests are meant only to record the peak amplitude of acceleration. Also, since there is no specification for the duration of the acceleration pulse, there is no definitive protocol to set time = 0. To impose such a specification could unnecessarily compromise the integrity of the main purpose of the test itself (to objectively measure head acceleration) because the means to pinpoint time = 0 (such as a contact electrode placed on the rigid impact plate at the point of contact with the head) could influence the response of the head.

Comment Received

For the Q3s head drop tests, the NPRM regulatory text proposed an ambient temperature range of 18.9 to 25.6 degrees Celsius (C). This range is wider than what is specified for other part 572 dummies, and is wider than what was specified in the agency's support document, ''Qualification Procedures for the Q3s Child Side Impact Crash Test Dummy,'' which was docketed with the NPRM. The latter specifies a range of 20.5 to 22.2 degrees C, which is consistent with other part 572 dummies.

HIS commented that the ambient temperature should be 20.5 to 22.2 degrees C, noting that HIS has not tested Q3s head assemblies within the larger temperature range and does not know how that temperature may affect the performance of the head.

NHTSA Response

NHTSA agrees with this comment, as the wider temperature range was in error. For this final rule, the range is specified as 20.5–22.2 degrees C in accordance with NHTSA's support document. The agency further notes that its Q3s testing has all been carried out within the tighter temperature range.

b. Neck Qualification

Comment Received

HIS seeks clarification on whether the headform rotation calculation is performed on the filtered angular rate data or whether the computation should be filtered after the integration. HIS suggests clarifying the regulatory text on this matter.

NHTSA Response

The outputs of the transducers were specified in the NPRM regulatory text, § 572.219, *Test conditions and instrumentation.* For the pendulum angular rate sensor, channel frequency class (CFC) 60 is specified. Thus, the rotation calculation is performed on an angular rate sensor (ARS) signal that is already filtered to CFC 60. No changes in the final rule are needed to address this point.

Comment Received

HIS notes that the NPRM's impact velocity in the lateral neck flexion is specified with a tolerance of ±0.05 m/s, whereas all the other Q3s qualification tests have a velocity tolerance of ±0.1 m/s. HIS believes the tighter tolerance will be difficult to maintain and measure. It recommends a tolerance of ±0.1 m/s for all tests, including the lateral neck pendulum test.

NHTSA Response

The tighter tolerance proposed in the NPRM was in error. For this final rule, NHTSA has revised the proposed regulatory text to indicate a tolerance of ±0.1 m/s for the impact velocity in the lateral neck pendulum test, as suggested by HIS. The correct specification for velocity is 3.8 ±0.1 m/s. NHTSA has also corrected a minor error in the support document, ''Qualification Procedures for the Q3s Child Side Impact Crash Test Dummy,'' which incorrectly specifies the impact velocity in the fore-aft neck flexion test as 4.7–4.8 m/s. The correct specification for fore-aft velocity is 4.7 ±0.1 m/s.

Comment Received

HIS requested NHTSA clarify Figure W4 in the NPRM, which depicts the assembly for the lateral neck flexion test. A set-up for a right flexion test is shown. The regulatory text states that the set-up for a left flexion test would be a mirror image of Figure W4. Figure W4 shows the approximate location of an ARS mounted on the pendulum interface block. Whereas the entire assembly is designed so that the neck may be flip-mounted for either a right or a left test, the interface block itself may remain bolted to the pendulum for both tests; *i.e.,* neither it nor the ARS attached to it need to be flipped. HIS asked NHTSA to clarify this in the final rule.

NHTSA Response

NHTSA agrees that flipping the position of the ARS is not necessary for right vs. left tests. NHTSA clarified this in the final rule regulatory text for § 572.213(c)(2)(ii) by stating that the mirror image would include all components beneath the pendulum interface plate in Figure W4.

The agency notes that the same situation exists for the lateral lumbar test depicted in Figure W10. NHTSA has made the same clarification to § 572.217(c)(2)(ii).

Comment Received

For the neck torsion test, HIS noted that the NPRM regulatory text provides two definitions as to when the data channels are to be zeroed. The first time occurs prior to running the test and requires collecting a data point for each channel during the setup of the test. The second time is when the pendulum makes contact with the striker plate. This occurs during the test and would require identifying where (in the data set) time zero occurs, recording the value of each data channel at that point, and then subtracting that value from corresponding data set for each channel. HIS noted that processing the data under each definition would result in different outputs for each channel. HIS recommends that a single method for ''zero definition'' should be established for processing the data.

NHTSA Response

The NPRM contained an error. Zeroing of data channels occurs only once, at the step when the zero pins are installed. For this final rule, § 572.213 (b)(3)(iv) has been corrected by removing the last sentence that had stated: ''All data channels shall be at the zero level at this time.''

c. Arm Position

Comments Received

Several comments on the NPRM for the proposed FMVSS No. 213 side impact test suggested that NHTSA should specify an exact position of the dummy's arm during testing. According to Graco and TRL, the initial arm position has a significant effect on the chest compression measurement in FMVSS No. 213 side impact tests. TRL also noted that when the Q3 dummy [54]

[54] The Q3 is one of a group of dummies known as the Q-series used in the European CRS regulation (UNECE Reg. No. 129) in frontal, side, and rear impact tests. Both the Q3s and the Q3 represent a three-year-old and are very similar in their construction and appearance. However, the Q3s is designed for side impacts only. Differences and

Continued

(similar to the Q3s) is used in side impact tests specified in the European CRS regulation (UNECE Reg. No. 129, ''Enhanced child restraint systems,''), its arm position also influences test results.

NHTSA Response

NHTSA agrees that the Q3s's arm position influences chest deflection in impacts to the side of the torso. The agency recognized this prior to the part 572 and FMVSS No. 213 proposals, so NHTSA assured that the Q3s shoulder design included a ball detent within the shoulder joint to aid in setting the arm precisely. The detent was specified in the NPRM version of the dummy and has been retained in the version specified for this final rule. To further address this issue, in this final rule there are more instructions in the dummy positioning procedure as to where to position the Q3s's elbows and arms. NHTSA will address positioning the Q3s's arm in the FMVSS No. 213 side impact test, as appropriate.

VIII. Post-NPRM Data From Humanetics

a. Qualification Tests

On February 9, 2016, HIS submitted a data spreadsheet to the NPRM docket that contains qualification results for Q3s units that they built and tested between 2013 and 2015. The spreadsheet includes the data on the units sold to Britax, MGA, and Calspan which had been obtained by NHTSA independently from the dummy owners and is already included in our analysis as explained earlier. HIS's spreadsheet also contains data for seven other units (owners not disclosed) that NHTSA had not obtained.

In addition to providing the data itself, HIS recommended limits for each qualification requirement based on the means of their measurements contained within their spreadsheet, plus/minus two standard deviations. In computing standard deviations, each trial carried an equal weight. However, there were uneven numbers of trials (over ten trials for some units and three or less for many others), which gave greater weight to the responses of particular dummies. Furthermore, HIS stated that they removed extreme data outliers, redundant tests, and lab-to-lab variation tests from the dataset. No further information was given on how many tests were excluded or the criteria for determining outliers, and no explanation was given on why redundant tests (which are needed to assess repeatability) were removed. Thus, the standard deviations derived from the HIS dataset have limited interpretive value.

All tests on the seven additional units appear to have been performed at HIS. Since we do not have data on the seven units from other laboratories, which is needed to fully evaluate repeatability and reproducibility, the data contained within the spreadsheet are not included in our overall assessment of R/R described earlier. Nonetheless, we examined HIS's data for the seven additional units to compare them against the data that we collected.

All qualification test requirements were examined against the additional HIS data with the exception of the timing requirements for the neck and lumbar moments and the pubic force requirement. The final rule specifies that the peak moment must occur during the time interval in which the rotation is within a specified set of rotation angles. We could not deduce whether the seven units conformed to the final rule because time-history data was not provided by HIS. We excluded the pubic force requirement since it has been dropped from the Final Rule.

We limited our examination of HIS's data to trials that were inclusive of HIS's recommended limits. We did this to examine the degree to which the seven new units are acceptable by both HIS's standards and the final rule. (About 5% of the trials listed in the HIS submission had responses that were more than two standard deviations away from the mean response. We did not include those data points.) We counted how many HIS trials had responses that were outside the limits specified by the final rule.

In three of the qualification tests, the ''Head, Frontal'' test, the ''Thorax without Arm'' test, and the ''Thorax with Arm'' test, a trend was seen in which multiple Q3s units did not conform to the final rule in 25% or more of test trials. These instances are shown in bold in the Table 10. This trend is consistent with our analysis presented earlier in which we determined that the thorax was too stiff and the resultant acceleration of the head was too low (in the frontal head drop test only) on some of the newer units.

TABLE 10—FINAL RULE VS. HIS'S DATA POSTING OF FEBRUARY 9, 2016

[Qualification tests in which two or more Q3s units failed to meet a requirement in 25% of their test trials] [1]

		Q3s dummy serial No.						
Qualification test	Final rule requirement	0229	9558	2313	7218	9526	2244	5579
Head, Frontal	Res. Accel, 255–300 G	0 of 3	***2 of 3***	***1 of 3***	***2 of 2***	***10 of 10***	***4 of 4***	***1 of 2***
Thorax without Arm	Probe force, 610–754 N	***7 of 7***	***3 of 6***	***4 of 4***	***2 of 7***	***3 of 12***	***5 of 7***	0 of 4
Thorax displacement, 24.5–30.5 mm.		***1 of 7***	0 of 6	***2 of 4***	***2 of 7***	***3 of 12***	0 of 7	0 of 4
Thorax with Arm	Thorax Displacement, 22.5–27.5 mm	***3 of 6***	0 of 4	0 of 12	0 of 4	0 of 17	0 of 5	***1 of 4***

[1] Interpretation. For s/n 9558 in Head, Frontal test: ''2 of 3'' indicates two trials (of a total of three) produced a resultant acceleration outside the range of 255–300 G range specified by the Final Rule. The bold, italics entry indicates a ratio ≥25% of nonconforming trials to total trials.

As mentioned earlier in this preamble, owners of new units may need to take remedial action to improve the responses of their dummies in the frontal head drop test and the thorax impact tests. HIS's data on all other qualification tests shows that the seven additional units are consistent with the dummy responses observed in our analysis presented earlier. With the exception of the instances shown in Table 10, HIS's new dummies are all aligned within the qualification response limits specified by the final rule. The non-conforming dummy responses shown in Table 10 are discussed in more detail below.

Head, frontal: Resultant head acceleration. The heads of six of the seven new units registered acceleration levels below the lower limit of 255 Gs specified in the final rule. HIS also provided test results on several spare

similarities between the two dummies are covered in the NPRM in greater detail.

heads (not associated with a particular dummy). For each of those heads, the acceleration levels were under 255 Gs in half or more of their respective test trials (about 240 G on average). These levels were also below the NPRM lower limit of 250 G, which was the minimum target response at the time the heads were tested.

This condition is similar to that of the MGA head described in the NHTSA analysis presented earlier. Recalling that 255 Gs coincides with the lower limit of an acceptable biofidelic response, we demonstrated that the response of the MGA head was unacceptably low (non-biofidelic). Likewise, three of the new heads appear to be unacceptable since their responses were well below 255 Gs in all of their trials. Most of the other new heads had responses that were borderline unacceptable with average responses close to 255 Gs. Owners of these units may need to take remedial action in order to have dummy heads that would meet today's final rule.

HIS did not provide a rationale on why they were unable to attain the target response interval of the NPRM, though they did suggest that a lower target for a new unit is needed to account for material aging. According to their analysis, the response of a head that was newly manufactured in 2008 increased by 10% over a period of six years, which they presumed was due to aging. However, the upper response limit in the final rule is 300 G, which represents an 18% increase above the lower limit of 255 G. HIS did not demonstrate that an even lower limit is needed to account for aging.

Notably, one new unit, serial no. 0229, was within the limits for all trials (an average of 269 G over three trials). An HIS spare head also produced an acceptable response in its only trial (271 G). This demonstrates that it is possible to manufacture new dummy heads that consistently produce acceleration responses above 255 G. With regard to a possible aging effect, even if the responses of these units increased by 10% they would still be below the upper limit of 300 G.

Thorax without Arm: Probe force and Thorax displacement. For six of the seven new units, the probe force exceeded the Final Rule's upper limit and the thorax deflection was borderline in the majority of test trials. (The averages of the seven units were 766 N for force and 25.8 mm for displacement, and the intervals in the Final Rule are 610–754 N and 24.5–30.5 mm).

Two units in particular, serial nos. 0229 and 2313, exceeded the upper force limit in all trials. The average force levels for these two units (775 N and 813 N, respectively) also exceeded the NPRM range (620–770 N), which was the target response interval at the time the dummies were tested. HIS did not provide a rationale on why they were unable to attain the target response. Typically, a trial exhibiting a high force produces a low deflection, indicating that the thorax is too stiff. In HIS's data, this was the case for any trial in which the probe force exceeded the upper limit specified by the final rule.

This condition was also the case for the Britax unit presented earlier in our analysis in which we highlighted the importance of thorax stiffness to the overall acceptability of the dummy. We demonstrated that the newer Britax unit was much too stiff and well outside the biofidelity corridors. Serial nos. 0229 and 2313 also appear to be too stiff. Owners of these two units, and perhaps four of the others, may need to remedy their dummies to reduce the thorax stiffness.

Notably, one unit, serial no. 5579, was within the limits for force and displacement in all trials. Also, serial no. 9526 was fitted with two separate thorax assemblies, one of which was also within the limits for all of its trials. This demonstrates that a given dummy may be manufactured or remedied with a thorax having a stiffness within the biomechanical and qualification limits.

Thorax with Arm: Lateral displacement. This test is designed to assure uniformity of the arm. However, the stiffness of the thorax (which is evaluated by the ''Thorax without Arm'' test) does influence the dummy response. For the ''Thorax with Arm'' test, six of the seven new units responded within the final rule's limits for lateral displacement in the majority of their trials. However, one unit, serial no. 0229, exceeded the upper limit for displacement in half of its trials. But since the thorax of this unit was determined to be too stiff (as seen in the ''Thorax without Arm'' test data), we do not consider its performance in the ''Thorax with Arm'' test to be a valid criterion for setting the qualification limits.

b. Mass and Anthropometry Measurements.

HIS's posting on February 9, 2016, also contained anthropometry and body segment mass measurements for the additional pool of dummies. These measurements were considered by NHTSA and the final rule has been revised accordingly. This is discussed further in Section IX, Drawing Package and PADI, under the heading of *Mass and anthropometry.* In all cases, the dummy measurements provided by HIS for anthropometry and mass are within the tolerances prescribed by the final rule.

IX. Drawing Package and PADI

Engineering Drawings

For this final rule, NHTSA has revised some of the engineering drawings to address discrepancies between the PADI and the engineering drawings, and some inconsistencies HIS noticed in the drawings it provided NHTSA for development of the NPRM. The changes either correct errors or provide missing information. They are not alterations that would change the dummy in any meaningful way or alter the dummy's response in either pre-test qualification testing or dynamic sled testing with CRSs. A comprehensive listing of changes is described in the document, ''Q3s Engineering Drawing Changes, Rev. J, May 2016,'' *supra,* a copy of which can be found in the docket for this final rule.

Neck assembly revision to aid end-users. In the NPRM, the engineering drawings for the neck cable inadvertently allowed interference to occur with the lower neck load cell during the assembly of the head and neck (see drawing 020–2415, cable length = 81.3 mm). In the case of the Calspan-owned unit, the cable extended 8.07 mm past the neck when torqued, but the load cell interface plate was only 7.90 mm thick. All components were within the drawing specifications, but since there was no assembled specification, interference occurred.

For the final rule, this situation has been corrected by shortening the cable and adding a new, special-purpose retaining nut that provides the necessary clearance. Additionally, the TDP provides drawings for a wrench designed to accept the specialized nut, the use of which makes it easier to properly torque the nut on the center cable. (The PADI provides detailed assembly instructions on adjusting the nut.)

The neck cable assembly (part number 020–2415) of an older Q3s unit may be swapped out with a revised cable and new lock nut with no further changes to the dummy. NHTSA performed neck qualification tests with the agency's older units fitted with the revised cable and nut and confirmed that it did not affect the performance of the neck. (The results are documented in ''Q3s Engineering Drawing Changes, Rev. J, May 2016,'' *supra.*) Owners of older Q3s units may still use an older, unrevised cable assembly as long as there is clearance between the retaining nut and the surface of the neck end plate.

Mass and anthropometry. The main assembly drawing of the Q3s (drawing 020–0100) contains separate sheets that provide mass and anthropometry measurements and tolerances of various body segments. In the NPRM, these measurements were based on the four units owned by NHTSA and the recommendations of HIS. For the final rule, the sheets have been updated to reflect measurements and tolerances derived from the larger pool of dummies. All revisions are also closer to biofidelity targets. For example, the overall mass has been changed to 14.5 kg (from 14.233 kg), which matches the human target.

Other general changes: Errors and missing dimensional information, fit and assembly, manufacturing preferences. These changes have been made to improve the production and manufacture of future Q3s dummies. An older Q3s dummy is not affected by these revisions.

Errors and missing dimensional information. Several drawings are changed to correct errors or add missing information. Examples include the use of a standard convention to specify hole locations and diameters and additional views (such as isometrics) to clearly show part dimensions and assemblies.

Fit and assembly. Several drawings have revised dimensions that make existing parts fit better and assemble more easily. Examples include slight changes on many dimensions, including overall dimensions, hole locations, and the addition of chamfers to parts.

Manufacturing preferences. Some drawings are revised to accommodate manufacturing material selections and material processes. An example is a change to the finish on the femur bone. Also, some revisions make the material call-outs on parts more general, to give dummy manufacturers more leeway on material selection in meeting the acceptance criteria for the qualification tests. Examples include call-outs for rubber, vinyl, or urethane parts.

Procedures for Assembly, Disassembly, and Inspection (PADI)

Neck assembly. Section 5.3, Neck, has been updated to reflect the installation of a protective cap over a revised lock nut for the neck center cable. (This change is discussed above.) Also, the version of the PADI in the NPRM depicted an outdated version of the neck center cable. Pictures and illustrations of this part have been updated in accordance with drawing 202–2415, *Tension cable assembly,* which shows a round fitting attached to the cable. Prior to the NPRM, an older version of the dummy had used a square fitting, and the agency mistakenly depicted the square fitting in the PADI.

Jam nuts for lumbar cable. Section 5.7.3, *Lower Torso Assembly and Installation,* has been updated to reflect installation of jam nuts in lieu of a lock nut with a nylon insert. This issue has been discussed in an earlier section.

New part numbers for several fasteners. For this final rule, several engineering drawings have been revised to reflect new part numbers for fasteners. Correspondingly, the agency has revised table listings throughout the PADI to reflect the new part numbers. In most cases, only the part number has changed, not the part itself, so corresponding changes to pictures and descriptions were not necessary. There were, however, a limited number of new parts, such as the new lock nut and snap cap on the neck center cable, that have been added to the PADI with new pictures.

X. Other Issues

a. Durability

Any dummy codified into 49 CFR part 572 must have sufficient durability. In general, the energy levels in part 572 qualification tests represent the energy levels at which dummies are expected to be exposed in the FMVSS applications.

As discussed in the NPRM (78 FR at 69961–69965), NHTSA assessed the durability of the Q3s dummy and did not see any durability problems. High-energy tests were run using the standard qualification test conditions at increased kinetic energy levels. Dummy positioning and set-up procedures were like that specified for the qualification procedures, but the impact speeds (and energy levels) were increased. This was achieved by dropping the test probe from a greater height. High energy tests were conducted for the head, neck, shoulder, thorax (with and without arm), lumbar, and pelvis. There were no problems with durability in any of the tests.

NHTSA did not find a need to repeat the high-level energy testing discussed in the NPRM since the data had demonstrated the Q3s's sufficient durability. The agency also notes that the four NHTSA-owned units have been in service since 2011, and the agency's records indicate that the torn lumbar column (described earlier) was the only instance of Q3s part failure of any sort.[55]

Given the results of the durability testing discussed in the NPRM and the agency's record of low maintenance to its own Q3s units, the dummy is demonstrated to be highly durable and suitable for use in FMVSS No. 213.

b. Consideration of Alternatives

As discussed in the NPRM, NHTSA considered alternative test dummies to incorporate into part 572 instead of the Q3s, but none were better than the Q3s for testing CRSs in the proposed FMVSS No. 213 side impact test. The closest viable alternatives were the modified HIII–3C and the Q3.

The HIII–3C is a ''frontal'' test dummy used in FMVSS No. 208, ''Occupant crash protection,'' to evaluate air bag aggressiveness or air bag suppression when a child is close to a deploying air bag, and in FMVSS No. 213's frontal sled test for the evaluation of child restraint performance. The HIII–3C was not designed for lateral impacts, but the agency developed a retrofit package for the dummy to install a new head and neck with better lateral biofidelity. The retrofitted dummy is referred to as the ''3Cs.'' As explained in the NPRM, the Q3s outperformed or is equivalent to the 3Cs in every aspect of biofidelity related to a dummy's response in a side impact. In addition, the Q3s has thorax deflection instrumentation, which the 3Cs does not. NHTSA has concluded that the Q3s is a better dummy than the 3Cs to measure injury assessment values in side impacts and is a preferable ATD for use in the proposed side impact upgrade to FMVSS No. 213.

The Q3s was derived from the original Q3 dummy developed in Europe. The Q3 is intended for use in frontal, side, and rear impacts. Many of the Q3's basic design concepts are included in the Q3s. However, as reported by the European Enhanced Vehicle-Safety Committee (Wismans, et al., 2008), the Q3s is superior to the Q3 in terms of lateral biofidelity and other matters. NHTSA considers the Q3s preferable to the Q3 for the proposed FMVSS No. 213 side impact test.

NHTSA concludes that the Q3s is superior to other commercially available child side impact test dummies and should be adopted into 49 CFR part 572. The Q3s dummy is a state-of-the-art device that will allow for a better assessment of the risk of injury to child occupants than the 3Cs or the Q3. The availability of Q3s's injury measuring capability is important to the design, development and evaluation of the side impact protection provided by child

[55] In NHTSA's experience with other part 572 ATDs, deformable parts typically have the shortest service lives. The parts that are replaced most often are those that are either molded or bonded together (such as the Q3s lumbar assembly). For example, NHTSA has found the typical service life for HIII–10C rib sets and neck assemblies to be about thirty sled tests.

restraint systems. The Q3s test dummy is available today, and has been thoroughly evaluated for suitable reproducibility and repeatability of results.

XI. Rulemaking Analyses and Notices

Executive Order 12866, Executive Order 13563, and DOT Rulemaking Procedures

We have considered the potential impact of this final rule under Executive Orders 12866 and 13563, and the Department of Transportation's administrative rulemaking procedures set forth in 49 CFR part 5, subpart B. This final rule has been determined to be nonsignificant and was not reviewed by the Office of Management and Budget (OMB) under E.O. 12866. We have considered the qualitative costs and benefits of this final rule under the principles of E.O. 12866.

This document would amend 49 CFR part 572 by adding design and performance specifications for a test dummy representative of a 3-year-old child that the agency plans to use in FMVSS No. 213 side impact compliance tests and for research purposes. As stated in 49 CFR 572.3, *Application,* part 572 does not in itself impose duties or liabilities on any person. It only serves to describe the test tools that measure the performance of occupant protection systems. Thus, this part 572 rule itself does not impose any requirements on anyone. Businesses are affected only if they choose to manufacture or test with the dummy. Because the economic impacts of this rule are minimal, no further regulatory evaluation is necessary.

There are benefits associated with this rulemaking but they cannot be quantified. The incorporation of the Q3s into 49 CFR part 572 would enable NHTSA to use the ATD in the proposed FMVSS No. 213 side impact test. Adoption of side impact protection requirements in FMVSS No. 213 enhances child passenger safety and fulfils a mandate in MAP–21 that NHTSA ''issue a final rule amending Federal Motor Vehicle Safety Standard Number 213 to improve the protection of children seated in child restraint systems during side impact crashes.'' [56] In addition, the availability of the Q3s in a standardized, regulated format would be beneficial by providing a suitable, stabilized, and objective test tool to the safety community for use in better protecting children in side impacts.

The costs associated with the Q3s only affect those who choose to use the Q3s. This part 572 final rule does not impose any requirements on anyone. If incorporated into an FMVSS, NHTSA will use the Q3s in its compliance testing of the requirements, but regulated entities are not required to use the Q3s or assess the performance of their products in the manner specified in the FMVSSs.

Based on NHTSA's dummy purchase contract with HIS, the estimated cost of an uninstrumented Q3s dummy is approximately $50,000. Instruments installed within the dummy needed to perform the qualification in accordance with part 572 include: Three uni-axial accelerometers within the head of the dummy (about $500 each); an upper neck load cell (about $10,000); a shoulder potentiometer (about $500); and a single-axis IR–TRACC within the thorax cavity (about $8,000). The cost of this instrumentation adds approximately $20,000 for a total cost of about $70,000.

There are minor costs associated with conducting the qualification tests. Most of the qualification fixtures are common with those used to qualify other part 572 dummies (including the neck pendulum, the quick-release fixture used in the head drop test, and the bench used in the probe impact tests). Some additional equipment unique to the Q3s may be fabricated from drawings within the technical data package, for an estimated cost of about $20,000 (price may vary widely depending on prevailing labor rates). This includes the cost to fabricate a load cell blank [57] used in the head drop tests, the torsion fixture for the neck torsion test, the special headform used in the neck and lumbar flexion tests, the leg positioning tool used in the probe impact tests, and the 3.81 kg test probe itself. The costs of the instrumentation equipment needed to perform the qualification tests amounts to an additional $3,460 (two angular rate sensors, $1,230 apiece; one test probe accelerometer, $500; one rotary potentiometer, $500.) This part 572 rule does not impose these costs on anyone. Child restraint manufacturers are affected by this final rule only if they elect to use the Q3s to test their products.

Dummy refurbishments and part replacements are a routine part of ATD testing. Various parts will likely have to be refurbished or replaced. However, the Q3s has proven to have high durability in sled testing. In addition, since the dummies are designed to be reusable, costs of the dummies and of parts can be amortized over a number of tests.

Executive Order 13771

Executive Order 13771 titled ''Reducing Regulation and Controlling Regulatory Costs,'' directs that, unless prohibited by law, whenever an executive department or agency publicly proposes for notice and comment or otherwise promulgates a new regulation, it shall identify at least two existing regulations to be repealed. In addition, any new incremental costs associated with new regulations shall, to the extent permitted by law, be offset by the elimination of existing costs. Only those rules deemed significant under section 3(f) of Executive Order 12866, ''Regulatory Planning and Review,'' are subject to these requirements. As discussed above, this rule is not a significant rule under Executive Order 12866 and, accordingly, is not subject to the offset requirements of 13771.

Regulatory Flexibility Act

Pursuant to the Regulatory Flexibility Act (5 U.S.C. 601 *et seq.,* as amended by the Small Business Regulatory Enforcement Fairness Act (SBREFA) of 1996), whenever an agency is required to publish a proposed or final rule, it must prepare and make available for public comment a regulatory flexibility analysis that describes the effect of the rule on small entities (*i.e.,* small businesses, small organizations, and small governmental jurisdictions), unless the head of the agency certifies the rule will not have a significant economic impact on a substantial number of small entities. The Small Business Administration's regulations at 13 CFR part 121 define a small business, in part, as a business entity ''which operates primarily within the United States.'' (13 CFR 121.105(a)).

NHTSA has considered the effects of this rulemaking under the Regulatory Flexibility Act. I hereby certify that this rulemaking action will not have a significant economic impact on a substantial number of small entities. This action will not have a significant economic impact on a substantial number of small entities because the addition of the test dummy to part 572 will not impose any requirements on anyone. NHTSA will use the ATD in agency testing but will not require anyone to manufacture the dummy or to test motor vehicles or motor vehicle equipment with it.

National Environmental Policy Act

NHTSA has analyzed this final rule for the purposes of the National

[56] Section 31501(a) of Subtitle E, ''Child Safety Standards,'' MAP–21, Public Law 112–141.

[57] See drawing 020–0150 in the TDP.

Environmental Policy Act and determined that it will not have any significant impact on the quality of the human environment.

Executive Order 13045 and 13132 (Federalism)

Executive Order 13045 (62 FR 19885, April 23, 1997) applies to any rule that: (1) Is determined to be ''economically significant'' as defined under E.O. 12866, and (2) concerns an environmental, health, or safety risk that NHTSA has reason to believe may have a disproportionate effect on children. If the regulatory action meets both criteria, NHTSA must evaluate the environmental health or safety effects of the planned rule on children, and explain why the planned regulation is preferable to other potentially effective and reasonably feasible alternatives considered by the agency.

This final rule is not subject to the Executive Order because it is not economically significant as defined in E.O. 12866.

NHTSA has examined today's final rule pursuant to Executive Order 13132 (64 FR 43255, August 10, 1999) and concluded that no additional consultation with States, local governments or their representatives is mandated beyond the rulemaking process. The agency has concluded that this final rule will not have federalism implications because the rule would not have ''substantial direct effects on the States, on the relationship between the national government and the States, or on the distribution of power and responsibilities among the various levels of government.'' This final rule will not impose any requirements on anyone. Businesses will be affected only if they choose to manufacture or test with the dummy.

Further, no consultation is needed to discuss the preemptive effect of today's final rule. NHTSA's safety standards can have preemptive effect in two ways. This rule amends 49 CFR part 572 and is not a safety standard.[58] This part 572 final rule will not impose any requirements on anyone.

Civil Justice Reform

With respect to the review of the promulgation of a new regulation, section 3(b) of Executive Order 12988, ''Civil Justice Reform'' (61 FR 4729, February 7, 1996) requires that Executive agencies make every reasonable effort to ensure that the regulation: (1) Clearly specifies the preemptive effect; (2) clearly specifies the effect on existing Federal law or regulation; (3) provides a clear legal standard for affected conduct, while promoting simplification and burden reduction; (4) clearly specifies the retroactive effect, if any; (5) adequately defines key terms; and (6) addresses other important issues affecting clarity and general draftsmanship under any guidelines issued by the Attorney General. This document is consistent with that requirement.

Pursuant to this Order, NHTSA notes as follows.

The issue of preemption is discussed above in connection with E.O. 13132. NHTSA notes further that there is no requirement that individuals submit a petition for reconsideration or pursue other administrative proceeding before they may file suit in court.

Paperwork Reduction Act

Under the Paperwork Reduction Act of 1995, a person is not required to respond to a collection of information by a Federal agency unless the collection displays a valid control number from the Office of Management and Budget (OMB). This final rule will not have any requirements that are considered to be information collection requirements as defined by the OMB in 5 CFR part 1320.

National Technology Transfer and Advancement Act

Section 12(d) of the National Technology Transfer and Advancement Act of 1995 (NTTAA), Public Law 104–113, section 12(d) (15 U.S.C. 272) directs NHTSA to use voluntary consensus standards in its regulatory activities unless doing so would be inconsistent with applicable law or otherwise impractical. Voluntary consensus standards are technical standards (*e.g.,* materials specifications, test methods, sampling procedures, and business practices) that are developed or adopted by voluntary consensus standards bodies. The NTTAA directs NHTSA to provide Congress, through OMB, explanations when the agency decides not to use available and applicable voluntary consensus standards.

The following voluntary consensus standards have been used in developing the Q3s:

- SAE Recommended Practice J211, Rev. Mar 95, ''Instrumentation for Impact Tests—Part 1—Electronic Instrumentation;'' and
- SAE J1733 of 1994–12 ''Sign Convention for Vehicle Crash Testing.''

Unfunded Mandates Reform Act

Section 202 of the Unfunded Mandates Reform Act of 1995 (UMRA), Public Law 104–4, requires Federal agencies to prepare a written assessment of the costs, benefits, and other effects of proposed or final rules that include a Federal mandate likely to result in the expenditure by State, local, or tribal governments, in the aggregate, or by the private sector, of more than $100 million annually (adjusted for inflation with base year of 1995). Before promulgating a NHTSA rule for which a written statement is needed, section 205 of the UMRA generally requires the agency to identify and consider a reasonable number of regulatory alternatives and adopt the least costly, most cost-effective, or least burdensome alternative that achieves the objectives of the rule.

This final rule will not impose any unfunded mandates under the UMRA. This rule does not meet the definition of a Federal mandate because it does not impose requirements on anyone. It amends 49 CFR part 572 by adding design and performance specifications for a 3-year-old child side impact test dummy that the agency would use in FMVSS No. 213 and for research purposes. This final rule would affect only those businesses that choose to manufacture or test with the dummy. It would not result in costs of $100 million or more to either State, local, or tribal governments, in the aggregate, or to the private sector.

Incorporation by Reference

Under regulations issued by the Office of the Federal Register (1 CFR 51.5(a)), an agency, as part of a final rule that includes material incorporated by reference, must summarize in the preamble of the final rule the material it incorporates by reference and discuss the ways the material is reasonably available to interested parties or how the agency worked to make materials available to interested parties.

In this final rule, NHTSA incorporates by reference a technical data package for the Q3s consisting of a set of

[58] With respect to the safety standards, the National Traffic and Motor Vehicle Safety Act contains an express preemptive provision: ''When a motor vehicle safety standard is in effect under this chapter, a State or a political subdivision of a State may prescribe or continue in effect a standard applicable to the same aspect of performance of a motor vehicle or motor vehicle equipment only if the standard is identical to the standard prescribed under this chapter.'' 49 U.S.C. 30103(b)(1). Second, the Supreme Court has recognized the possibility of implied preemption: State requirements imposed on motor vehicle manufacturers, including sanctions imposed by State tort law, can stand as an obstacle to the accomplishment and execution of a NHTSA safety standard. When such a conflict exists, the Supremacy Clause of the Constitution makes the State requirements unenforceable. *See Geier* v. *American Honda Motor Co.,* 529 U.S. 861 (2000).

engineering drawings for the test dummy, a parts list, and a user's manual that has procedures for assembly, disassembly, and inspection of the dummy. Q3s dummies manufactured to meet the qualification requirements and the technical data package will be uniform in their design, construction, and response to impact forces.

NHTSA has placed a copy of the technical data package in the docket for this final rule. Interested persons can download a copy of the materials or view the materials online by accessing *www.Regulations.gov,* telephone 1–877–378–5457, or by contacting NHTSA's Chief Counsel's Office at the phone number and address set forth in the **FOR FURTHER INFORMATION CONTACT** section of this document. The material is also available for inspection at the Department of Transportation, Docket Operations, Room W12–140, 1200 New Jersey Avenue SE, Washington, DC Telephone: 202–366–9826. This final rule also incorporates versions of SAE Recommended Practice J211/1 parts 1 and 2 and SAE J1733. The material is available for review at NHTSA and is available for purchase from SAE International.

Plain Language

Executive Order 12866 requires each agency to write all rules in plain language.

Application of the principles of plain language includes consideration of the following questions:

Has the agency organized the material to suit the public's needs?

Are the requirements in the rule clearly stated?

Does the rule contain technical language or jargon that is not clear?

Would a different format (grouping and order of sections, use of headings, paragraphing) make the rule easier to understand?

Would more (but shorter) sections be better?

Could the agency improve clarity by adding tables, lists, or diagrams?

What else could the agency do to make this rulemaking easier to understand?

If you have any responses to these questions, please send them to NHTSA.

Regulation Identifier Number

The Department of Transportation assigns a regulation identifier number (RIN) to each regulatory action listed in the Unified Agenda of Federal Regulations. The Regulatory Information Service Center publishes the Unified Agenda in April and October of each year. You may use the RIN contained in the heading at the beginning of this document to find this action in the Unified Agenda.

List of Subjects in 49 CFR Part 572

Motor vehicle safety, Incorporation by reference.

In consideration of the foregoing, NHTSA amends 49 CFR part 572 as follows:

PART 572—ANTHROPOMORPHIC TEST DEVICES

■ 1. The authority citation for part 572 continues to read as follows:

Authority: 49 U.S.C. 322, 30111, 30115, 30117 and 30166; delegation of authority at 49 CFR 1.95.

■ 2. Subpart W, consisting of §§ 572.210 through 572.219, is added to read as follows:

Subpart W—Q3s Three-Year-Old Child Test Dummy

Sec.
572.210 Incorporation by reference.
572.211 General description.
572.212 Head assembly and test procedure.
572.213 Neck assembly and test procedure.
572.214 Shoulder assembly and test procedure.
572.215 Thorax with arm assembly and test procedure.
572.216 Thorax without arm assembly and test procedure.
572.217 Lumbar spine assembly and test procedure.
572.218 Pelvis assembly and test procedure.
572.219 Test conditions and instrumentation.
Appendix A to Subpart W of Part 572—Figures

Subpart W—Q3s Three-Year-Old Child Test Dummy

§ 572.210 Incorporation by reference.

Certain material is incorporated by reference (IBR) into this part with the approval of the Director of the Federal Register under 5 U.S.C. 552(a) and 1 CFR part 51. To enforce any edition other than that specified in this section, NHTSA must publish a document in the **Federal Register** and the material must be available to the public. All approved material is available for inspection at the Department of Transportation, Docket Operations, Room W12–140, 1200 New Jersey Avenue SE, Washington DC 20590, telephone 202–366–9826, and is available from the sources listed in paragraphs (a) and (b) of this section. It is also available for inspection at the National Archives and Records Administration (NARA). For information on the availability of this material at NARA, email *fedreg.legal@nara.gov* or go to *www.archives.gov/federal-register/cfr/ibr-locations.html.*

(a) NHTSA Technical Information Services, 1200 New Jersey Ave. SE, Washington, DC 20590, telephone 202–366–5965.

(1) A parts/drawing list entitled, ''Parts/Drawings List, Part 572 Subpart W, Q3s Three-Year-Old Child Side Impact Dummy, May 2016,'' (Parts/Drawings List); IBR approved for § 572.211.

(2) A drawings and inspection package entitled, ''Drawings and Specifications for Q3S Three-Year-Old Child Test Dummy, Part 572 Subpart W, May 2016,'' (Drawings and Specifications); IBR approved for §§ 572.211, 572.212, 572.213, 572.214, 572.215, 572.216, 572.217, 572.218, and 572.219.

(3) A procedures manual entitled ''Procedures for Assembly, Disassembly, and Inspection (PADI) of the Q3s Child Side Impact Crash Test Dummy, May 2016,'' (PADI); IBR approved for §§ 572.211, 572.215(b), 572.216(b), and 572.219(a).

(b) SAE International, 400 Commonwealth Drive, Warrendale, PA 15096, call 1–877–606–7323, *https://www.sae.org/.*

(1) SAE Recommended Practice J211/1, Rev. Mar 95, ''Instrumentation for Impact Tests—Part 1—Electronic Instrumentation,'' (SAE J211); IBR approved for § 572.219;

(2) SAE Information Report J1733 of 1994–12, ''Sign Convention for Vehicle Crash Testing,'' December 1994, (SAE J1733); IBR approved for § 572.219.

§ 572.211 General description.

(a) The Q3s Three-Year-Old Child Test Dummy is defined by the following materials:

(1) The Parts/Drawings List (incorporated by reference, see § 572.210);

(2) The Drawings and Specifications (incorporated by reference, see § 572.210);

(3) The PADI (incorporated by reference, see § 572.210).

(b) The structural properties of the dummy are such that the dummy conforms to this subpart in every respect before use in any test.

§ 572.212 Head assembly and test procedure.

All assemblies and drawings referenced in this section are contained in Drawings and Specifications, incorporated by reference, see § 572.210.

(a) The head assembly for this test consists of the complete head (drawing 020–1200) with head accelerometer assembly (drawing 020–1013A), and a half mass simulated upper neck load cell (drawing 020–1050).

(b) When the head assembly is tested according to the test procedure in paragraph (c) of this section, it shall have the following characteristics:

(1) *Frontal head qualification test.* When the head assembly is dropped from a height of 376.0 ± 1.0 mm in accordance with paragraph (c) of this section, the peak resultant acceleration at the location of the accelerometers at the head CG shall have a value between 255 G and 300 G. The resultant acceleration vs. time history curve shall be unimodal; oscillations occurring after the main pulse must be less than 10 percent of the peak resultant acceleration. The lateral acceleration shall not exceed 15 G (zero to peak).

(2) *Lateral head qualification test.* When the head assembly is dropped from a height of 200.0 ± 1.0 mm in accordance with paragraph (c) of this section, the peak resultant acceleration at the location of the accelerometers at the head CG shall have a value between 114 G and 140 G. The resultant acceleration vs. time history curve shall be unimodal; oscillations occurring after the main pulse must be less than 10 percent of the peak resultant acceleration. The X-component acceleration shall not exceed 15 G (zero to peak).

(c) The test procedure for the head assembly is as follows:

(1) Soak the head assembly in a controlled environment at any temperature between 20.6 and 22.2 °C and a relative humidity from 10 to 70 percent for at least four hours prior to a test.

(2) Prior to the test, clean the impact surface of the skin and the impact plate surface with isopropyl alcohol, trichloroethane, or an equivalent. The skin of the head and the impact plate surface must be clean and dry for testing.

(3)(i) For the frontal head test, suspend and orient the head assembly with the forehead facing the impact surface as shown in figure W1 in appendix A to this subpart. The lowest point on the forehead must be 376.0 ± 1.0 mm from the impact surface. Assure that the head is horizontal laterally. Adjust the head angle so that the upper neck load cell simulator is 28 ± 2 degrees forward from the vertical while assuring that the head remains horizontal laterally.

(ii) For the lateral head test, the head is dropped on the aspect that opposes the primary load vector of the ensuing full scale test for which the dummy is being qualified. A left drop set up that is used to qualify the dummy for an ensuing full scale left side impact is depicted in figure W2 in appendix A to this subpart. A right drop set-up would be the mirror image of that shown in figure W2. Suspend and orient the head assembly as shown in figure W2. The lowest point on the impact side of the head must be 200.0 ± 1.0 mm from the impact surface. Assure that the head is horizontal in the fore-aft direction. Adjust the head angle so that the head base plane measured from the base surface of the upper neck load cell simulator is 35 ± 2 degrees forward from the vertical while assuring that the head remains horizontal in the fore-aft direction.

(4) Drop the head assembly from the specified height by means that ensure a smooth, instant release onto a rigidly supported flat horizontal steel plate which is 50.8 mm thick and 610 mm square. The impact surface shall be clean, dry and have a surface finish of not less than 0.2 microns (RMS) and not more than 2.0 microns (RMS).

(5) Allow at least 2 hours between successive tests on the same head.

§ 572.213 Neck assembly and test procedure.

All assemblies and drawings referenced in this section are contained in Drawings and Specifications, incorporated by reference, see § 572.210.

(a)(1) The neck and headform assembly for the purposes of the fore-aft neck flexion and lateral neck flexion qualification tests, as shown in figures W3 and W4 in appendix A to this subpart, consists of the headform (drawing 020–9050, sheet 1) with angular rate sensor installed (drawing SA572–S58), six-channel neck/lumbar load cell (drawing SA572–S8), neck assembly (drawing 020–2400), neck/torso interface plate (drawing 020–9056) and pendulum interface plate (drawing 020–9051) with angular rate sensor installed (drawing SA572–S58).

(2) The neck assembly for the purposes of the neck torsion qualification test, as shown in figure W5 in appendix A to this subpart, consists of the neck twist fixture (drawing DL210–200) with rotary potentiometer installed (drawing SA572–S51), neck adaptor plate assembly (drawing DL210–220), neck assembly (drawing 020–2400), six-channel neck/lumbar load cell (drawing SA572–S8), and twist fixture end plate (drawing DL210–210).

(b) When the neck and headform assembly as defined in paragraph (a)(1) of this section, or the neck assembly as defined in paragraph (a)(2) of this section, is tested according to the test procedure in paragraph (c) of this section, it shall have the following characteristics:

(1) *Fore-aft neck flexion qualification test.* (i) Plane D, referenced in figure W3 in appendix A to this subpart, shall rotate in the direction of pre-impact flight with respect to the pendulum's longitudinal centerline between 69.5 degrees and 81.0 degrees. During the time interval while the rotation is within these angles, the peak moment measured by the neck transducer (drawing SA572–S8) shall have a value between 41.5 N-m and 50.7 N-m.

(ii) The decaying headform rotation vs. time curve shall cross the zero angle with respect to its initial position at time of impact relative to the pendulum centerline between 45 to 55 ms after the time the peak rotation value is reached.

(iii) All instrumentation data channels are defined to be zero when the longitudinal centerline of the neck and pendulum are parallel.

(iv) The headform rotation shall be calculated by the following formula with the integration beginning at time zero:

$$\text{Headform rotation (deg)} = \int [(\text{Headform Angular Rate})_y - (\text{Pendulum Angular Rate})_y]\, dt$$

(v) $(\text{Headform Angular Rate})_y$ is the angular rate about the y-axis in deg/sec measured on the headform (drawing 020–9050, sheet 1), and $(\text{Pendulum Angular Rate})_y$ is the angular rate about the y-axis in deg/sec measured on the pendulum interface plate (drawing 020–9051).

(2) *Lateral neck flexion qualification test.* (i) Plane D, referenced in Figure W4 in appendix A to this subpart, shall rotate in the direction of pre-impact flight with respect to the pendulum's longitudinal centerline between 76.5 degrees and 87.5 degrees. During the time interval while the rotation is within these angles, the peak moment measured by the neck transducer (drawing SA572–S8) shall have a value between 25.3 N-m and 32.0 N-m.

(ii) The decaying headform rotation vs. time curve shall cross the zero angle with respect to its initial position at time of impact relative to the pendulum centerline between 61 to 71 ms after the time the peak rotation value is reached.

(iii) All instrumentation data channels are defined to be zero when the longitudinal centerline of the neck and pendulum are parallel.

(iv) The headform rotation shall be calculated by the following formula with the integration beginning at time zero:

$$\text{Headform rotation (deg)} = \int [(\text{Headform Angular Rate})_y - (\text{Pendulum Angular Rate})_y]\, dt$$

(v) $(\text{Headform Angular Rate})_y$ is the angular rate about the y-axis in deg/sec

measured on the headform (drawing 020–9050, sheet 1), and (Pendulum Angular Rate)$_y$ is the angular rate about the y-axis in deg/sec measured on the pendulum interface plate (drawing 020–9051).

(3) *Neck torsion qualification test.* (i) The neck twist fixture (drawing DL210–200), referenced in figure W5 in appendix A to this subpart, shall rotate in the direction of pre-impact flight with respect to the pendulum's longitudinal centerline between 74.5 degrees and 91.0 degrees, as measured by the rotary potentiometer (drawing SA572–S51). During the time interval while the rotation is within these angles, the peak moment measured by the neck transducer (drawing SA572–S8) shall have a value between 8.0 N-m and 10.0 N-m.

(ii) The decaying neck twist fixture rotation vs. time curve shall cross the zero angle with respect to its initial position at time of impact relative to the pendulum centerline between 85 to 102 ms after the time the peak rotation value is reached.

(iii) All instrumentation data channels are defined to be zero when the zero pins are installed such that the neck is not in torsion.

(c) The test procedure for the neck assembly is as follows:

(1) Soak the neck assembly in a controlled environment at any temperature between 20.6 and 22.2 °C and a relative humidity between 10 and 70 percent for at least four hours prior to a test.

(2)(i) For the fore-aft neck flexion test, mount the neck and headform assembly, defined in paragraph (a)(1) of this section, on the pendulum, described in figure 22 to § 572.33, so that the midsagittal plane of the headform is vertical and coincides with the plane of motion of the pendulum, and with the neck placement such that the front side of the neck is closest to the honeycomb material as shown in figure W3 in appendix A to this subpart.

(ii) For the lateral neck flexion test, the test is carried out in the direction opposing the primary load vector of the ensuing full scale test for which the dummy is being qualified. A right flexion test set-up that is used to qualify the dummy for an ensuing full scale right side impact is depicted in figure W4 in appendix A to this subpart. A left flexion test set-up would be depicted by a mirror image of all components beneath the pendulum interface plate in Figure W4. Mount the neck and headform assembly, defined in paragraph (a)(1) of this section, on the pendulum, described by figure 22 to § 572.33, so that the midsagittal plane of the headform is vertical and coincides with the plane of motion of the pendulum, and with the neck placement such that the right (or left) side of the neck is closest to the honeycomb material as shown in figure W4.

(iii) For the neck torsion test, the test is carried out in the direction opposing the primary load vector of the ensuing full scale test for which the dummy is being qualified. A right torsion test set-up that is used to qualify the dummy for an ensuing full scale right side impact is depicted in figure W5 in appendix A to this subpart. A left flexion test set-up would be a mirror image of that shown in figure W5. Mount the neck assembly, defined in paragraph (a)(2) of this section, on the pendulum, described by figure 22 to § 572.33, as shown in figure W5.

(3)(i) Release the pendulum and allow it to fall freely from a height to achieve an impact velocity of 4.7 ± 0.1 m/s for fore-aft flexion, 3.8 ± 0.1 m/s for lateral flexion, and 3.6 ± 0.1 m/s for torsion, measured by an accelerometer mounted on the pendulum at time zero.

(ii) Stop the pendulum from the initial velocity with an acceleration vs. time pulse that meets the velocity change as specified in table 1 to this section. Integrate the pendulum accelerometer data channel to obtain the velocity vs. time curve beginning at time zero.

(iii) Time zero is defined as the time of initial contact between the pendulum striker plate and the honeycomb material.

TABLE 1 TO § 572.213

Time (ms)	Fore-aft Flexion (m/s)	Time (ms)	Lateral Flexion (m/s)	Time (ms)	Torsion (m/s)
10	1.1–2.1	10	1.7–2.2	10	0.9–1.3
20	2.8–3.8	15	2.5–3.0	15	1.4–2.0
30	4.1–5.1	20	3.4–3.9	20	2.0–2.6

§ 572.214 Shoulder assembly and test procedure.

All assemblies and drawings referenced in this section are contained in Drawings and Specifications, incorporated by reference, see § 572.210.

(a) The shoulder assembly for this test consists of the torso assembly (drawing 020–4500) with string pot assembly (drawing SA572–S38 or SA572–S39) installed.

(b) When the center of the shoulder of a completely assembled dummy (drawing 020–0100) is impacted laterally by a test probe conforming to § 572.219, at 3.6 ± 0.1 m/s according to the test procedure in paragraph (c) of this section:

(1) Maximum lateral shoulder displacement (compression) relative to the spine, measured with the string potentiometer assembly (drawing SA572–S38 or SA572–S39), must not be less than 17.0 mm and not more than 22.0 mm. The peak force, measured by the impact probe as defined in § 572.219 and calculated in accordance with paragraph (b)(2) of this section, shall have a value between 1123 N and 1437 N.

(2) The force shall be calculated by the product of the impactor mass and its measured deceleration.

(c) The test procedure for the shoulder assembly is as follows:

(1) The dummy is clothed in the Q3s suit (drawing 020–8001). No additional clothing or shoes are placed on the dummy.

(2) Soak the dummy in a controlled environment at any temperature between 20.6 and 22.2 °C and a relative humidity from 10 to 70 percent for at least four hours prior to a test.

(3) The shoulder test is carried out in the direction opposing the primary load vector of the ensuing full scale test for which the dummy is being qualified. A left shoulder test set-up that is used to qualify the dummy for an ensuing full scale left side impact is depicted in figure W6 in appendix A to this subpart. A right shoulder set-up would be a mirror image of that shown in figure W6. Seat the dummy on the qualification bench described in figure V3 to § 572.194, the seat pan and seat back surfaces of which are covered with thin sheets of PTFE (Teflon) (nominal stock thickness: 2 to 3 mm) along the impact side of the bench.

(4) Position the dummy on the bench as shown in Figure W6, with the ribs

making contact with the seat back oriented 24.6 degrees relative to vertical, the legs extended forward along the seat pan oriented 21.6 degrees relative to horizontal with the knees spaced 40 mm apart. Position the arms so that the upper arms are parallel to the seat back (±2 degrees) and the lower arms are parallel to the dummy's sagittal plane and perpendicular to the upper arms. Move the elbows inward (medially) until initial contact occurs between the sleeve and the portion of the suit covering the thorax while maintaining the relationships between the arms, seat back, and sagittal plane.

(5) The target point of the impact is a point on the shoulder that is 15 mm above and perpendicular to the midpoint of a line connecting the centers of the bolt heads of the two lower bolts (part #5000010) that connect the upper arm assembly (020–9750) to the shoulder ball retaining ring (020–3533).

(6) Impact the shoulder with the test probe so that at the moment of contact the probe's longitudinal centerline should be horizontal (±1 degree), and the centerline of the probe should be within 2 mm of the target point.

(7) Guide the test probe during impact so that there is no significant lateral, vertical, or rotational movement.

(8) No suspension hardware, suspension cables, or any other attachments to the probe, including the velocity vane, shall make contact with the dummy during the test.

§ 572.215 Thorax with arm assembly and test procedure.

All assemblies and drawings referenced in this section are contained in Drawings and Specifications, incorporated by reference, see § 572.210.

(a) The thorax assembly for this test consists of the torso assembly (drawing 020–4500) with an IR–TRACC (drawing SA572–S37) installed.

(b) When the thorax of a completely assembled dummy (drawing 020–0100) is impacted laterally by a test probe conforming to § 572.219 at 5.0 ± 0.1 m/s according to the test procedure in paragraph (c) of this section:

(1) Maximum lateral thorax displacement (compression) relative to the spine, measured with the IR–TRACC (drawing SA572–S37) and processed as set out in the PADI (incorporated by reference, see § 572.210), shall have a value between 22.5 mm and 27.5 mm. The peak force occurring after 5 ms, measured by the impact probe as defined in § 572.219 and calculated in accordance with paragraph (b)(2) of this section, shall have a value between 1360 N and 1695 N.

(2) The force shall be calculated by the product of the impactor mass and its measured deceleration.

(3) Time zero is defined as the time of contact between the impact probe and the arm. All channels should be at a zero level at this point.

(c) The test procedure for the thorax with arm assembly is as follows:

(1) The dummy is clothed in the Q3s suit (drawing 020–8001). No additional clothing or shoes are placed on the dummy.

(2) Soak the dummy in a controlled environment at any temperature between 20.6 and 22.2 °C and a relative humidity from 10 to 70 percent for at least four hours prior to a test.

(3) The test is carried out in the direction opposing the primary load vector of the ensuing full scale test for which the dummy is being qualified. A left thorax test set-up that is used to qualify the dummy for an ensuing full scale left side impact is depicted in figure W7 in appendix A to this subpart. A right thorax set-up would be a mirror image of that shown in figure W7. Seat the dummy on the qualification bench described in figure V3 to § 572.194, the seat pan and seat back surfaces of which are covered with thin sheets of PTFE (Teflon) (nominal stock thickness: 2 to 3 mm) along the impact side of the bench.

(4) Position the dummy on the bench as shown in figure W7 in appendix A to this subpart, with the ribs making contact with the seat back oriented 24.6 degrees relative to vertical, the legs extended forward along the seat pan oriented 21.6 degrees relative to horizontal with the knees spaced 40 mm apart. On the non-impact side of the dummy, the long axis of the upper arm is positioned parallel to the seat back (±2 degrees). On the impact side, the upper arm is positioned such that the target point intersects its long axis as described in paragraph (c)(5) of this section. The long axis of the upper arm is defined by section line A–A in drawing 020–9750. Both of the lower arms are set perpendicular to the upper arms and parallel to the dummy's sagittal plane. Move the elbows inward (medially) until initial contact occurs between the sleeve and the portion of the suit covering the thorax while maintaining the relationships between the arms, seat back, and sagittal plane.

(5) The target point of the impact is the point of intersection on the lateral aspect of the upper arm and a line projecting from the thorax of the dummy. The projecting line is horizontal, runs parallel to the coronal plane of the dummy, and passes through the midpoint of a line connecting the centers of the bolt heads of the two IR–TRACC bolts (part #5000646). The projected line should intersect the upper arm within 2 mm of its long axis.

(6) Impact the arm with the test probe so that at the moment of contact the probe's longitudinal centerline should be horizontal (±1 degrees), and the centerline of the probe should be within 2 mm of the target point.

(7) Guide the test probe during impact so that there is no significant lateral, vertical, or rotational movement.

(8) No suspension hardware, suspension cables, or any other attachments to the probe, including the velocity vane, shall make contact with the dummy during the test.

§ 572.216 Thorax without arm assembly and test procedure.

All assemblies and drawings referenced in this section are contained in Drawings and Specifications, incorporated by reference, see § 572.210.

(a) The thorax assembly for this test consists of the torso assembly (drawing 020–4500) with IR–TRACC (drawing SA572–S37) installed.

(b) When the thorax of a completely assembled dummy (drawing 020–0100) with the arm (drawing 020–9700 or 020–9800) on the impacted side removed is impacted laterally by a test probe conforming to § 572.219 at 3.3 ± 0.1 m/s according to the test procedure in paragraph (c) of this section:

(1) Maximum lateral thorax displacement (compression) relative to the spine, measured with the IR–TRACC (drawing SA572–S37) and processed as set out in the PADI (incorporated by reference, see § 572.210), shall have a value between 24.5 mm and 30.5 mm. The peak force, measured by the impact probe as defined in § 572.219 and calculated in accordance with paragraph (b)(2) of this section, shall have a value between 610 N and 754 N.

(2) The force shall be calculated by the product of the impactor mass and its measured deceleration.

(c) The test procedure for the thorax without arm assembly is as follows:

(1) The dummy is clothed in the Q3s suit (drawing 020–8001). No additional clothing or shoes are placed on the dummy.

(2) Soak the dummy in a controlled environment at any temperature between 20.6 and 22.2 °C and a relative humidity from 10 to 70 percent for at least four hours prior to a test.

(3) The test is carried out in the direction opposing the primary load vector of the ensuing full scale test for which the dummy is being qualified. A left thorax test set-up that is used to qualify the dummy for an ensuing full

scale left side impact is depicted in figure W8 in appendix A to this subpart. A right thorax set-up would be a mirror image of that shown in Figure W8. Seat the dummy on the qualification bench described in figure V3 to § 572.194, the seat pan and seat back surfaces of which are covered with thin sheets of PTFE (Teflon) (nominal stock thickness: 2 to 3 mm) along the impact side of the bench.

(4) Position the dummy on the bench as shown in figure W8 in appendix A to this subpart, with the ribs making contact with the seat back oriented 24.6 degrees relative to vertical, the legs extended forward along the seat pan oriented 21.6 degrees relative to horizontal with the knees spaced 40 mm apart, and the arm on the non-impacted side positioned so that the upper arm is parallel (±2 degrees) to the seat back and the lower arm perpendicular to the upper arm.

(5) The target point of the impact is the midpoint of a line between the centers of the bolt heads of the two IR–TRACC bolts (part #5000646).

(6) Impact the thorax with the test probe so that at the moment of contact the probe's longitudinal centerline should be horizontal (±1 degrees), and the centerline of the probe should be within 2 mm of the target point.

(7) Guide the test probe during impact so that there is no significant lateral, vertical, or rotational movement.

(8) No suspension hardware, suspension cables, or any other attachments to the probe, including the velocity vane, shall make contact with the dummy during the test.

§ 572.217 Lumbar spine assembly and test procedure.

All assemblies and drawings referenced in this section are contained in Drawings and Specifications, incorporated by reference, see § 572.210.

(a) The lumbar spine and headform assembly for the purposes of the fore-aft lumbar flexion and lateral lumbar flexion qualification tests, as shown in Figures W9 and W10 in appendix A to this subpart, consists of the headform (drawing 020–9050, sheet 2) with angular rate sensor installed (drawing SA572–S58), six-channel neck/lumbar load cell (drawing SA572–S8), lumbar spine assembly (drawing 020–6000), lumbar interface plate (drawing 020–9062) and pendulum interface plate (drawing 020–9051) with angular rate sensor installed (drawing SA572–S58).

(b) When the lumbar spine and headform assembly is tested according to the test procedure in paragraph (c) of this section, it shall have the following characteristics:

(1) *Fore-aft lumbar flexion qualification test.* (i) Plane D, referenced in figure W9 in appendix A to this subpart, shall rotate in the direction of pre-impact flight with respect to the pendulum's longitudinal centerline between 47.0 degrees and 58.5 degrees. During the time interval while the rotation is within these angles, the peak moment measured by the neck/lumbar transducer (drawing SA572–S8) shall have a value between 78.2 N-m and 96.2 N-m.

(ii) The decaying headform rotation vs. time curve shall cross the zero angle with respect to its initial position at time of impact relative to the pendulum centerline between 49 to 59 ms after the time the peak rotation value is reached.

(iii) All instrumentation data channels are defined to be zero when the longitudinal centerline of the lumbar spine and pendulum are parallel.

(iv) The headform rotation shall be calculated by the following formula with the integration beginning at time zero:

$$\text{Headform rotation (deg)} = \int [(\text{Headform Angular Rate})_y - (\text{Pendulum Angular Rate})_y]\, dt$$

(v) $(\text{Headform Angular Rate})_y$ is the angular rate about the y-axis in deg/sec measured on the headform (drawing 020–9050, sheet 2), and $(\text{Pendulum Angular Rate})_y$ is the angular rate about the y-axis in deg/sec measured on the pendulum interface plate (drawing 020–9051).

(2) *Lateral lumbar flexion qualification test.* (i) Plane D, referenced in figure W10, shall rotate in the direction of pre-impact flight with respect to the pendulum's longitudinal centerline between 46.1 degrees and 58.2 degrees. During the time interval while the rotation is within these angles, the peak moment measured by the neck/lumbar transducer (drawing SA572–S8) shall have a value between 79.4 N-m and 98.1 N-m.

(ii) The decaying headform rotation vs. time curve shall cross the zero angle with respect to its initial position at time of impact relative to the pendulum centerline between 48 to 59 ms after the time the peak rotation value is reached.

(iii) All instrumentation data channels are defined to be zero when the longitudinal centerline of the lumbar spine and pendulum are parallel.

(iv) The headform rotation shall be calculated by the following formula with the integration beginning at time zero:

$$\text{Headform rotation (deg)} = \int [(\text{Headform Angular Rate})_y - (\text{Pendulum Angular Rate})_y]\, dt$$

(v) $(\text{Headform Angular Rate})_y$ is the angular rate about the y-axis in deg/sec measured on the headform (drawing 020–9050, sheet 2), and $(\text{Pendulum Angular Rate})_y$ is the angular rate about the y-axis in deg/sec measured on the pendulum interface plate (drawing 020–9051).

(c) The test procedure for the lumbar spine assembly is as follows:

(1) Soak the lumbar spine assembly in a controlled environment at any temperature between 20.6 and 22.2 °C and a relative humidity between 10 and 70 percent for at least four hours prior to a test.

(2)(i) For the fore-aft lumbar flexion test, mount the lumbar spine and headform assembly, defined in paragraph (a) of this section, on the pendulum described Figure 22 to § 572.33 so that the midsagittal plane of the headform is vertical and coincides with the plane of motion of the pendulum, and with the lumbar spine placement such that the front side of the lumbar spine is closest to the honeycomb material.

(ii) For the lateral lumbar flexion test, the test is carried out in the direction opposing the primary load vector of the ensuing full scale test for which the dummy is being qualified. A right flexion test set-up that is used to qualify the dummy for an ensuing a full scale right side impact is depicted in figure W10 in appendix A to this subpart. A left flexion test set-up would be depicted by a mirror image of all components beneath the pendulum interface plate in Figure W10. Mount the lumbar spine and headform assembly, defined in paragraph (a)(1) of this section, on the pendulum described in figure 22 to § 572.33 so that the midsagittal plane of the headform is vertical and perpendicular to the direction of motion of the pendulum, and with the lumbar spine placement such that the right (or left) side of the lumbar spine is closest to the honeycomb material.

(3)(i) Release the pendulum and allow it to fall freely from a height to achieve an impact velocity of 4.4 ± 0.1 m/s, measured by an accelerometer mounted on the pendulum as shown in Figure 22 to § 572.33 at time zero.

(ii) Stop the pendulum from the initial velocity with an acceleration vs. time pulse that meets the velocity change as specified in table 1 to this section. Integrate the pendulum accelerometer data channel to obtain the velocity vs. time curve beginning at time zero.

(iii) Time zero is defined as the time of initial contact between the pendulum

striker plate and the honeycomb material.

TABLE 1 TO § 572.217

Time (ms)	Fore-aft flexion (m/s)	Lateral flexion (m/s)
10	1.3–1.7	1.3–1.7
20	2.7–3.7	2.7–3.7
30	4.1–4.9	4.0–4.8

§ 572.218 Pelvis assembly and test procedure.

All assemblies and drawings referenced in this section are contained in Drawings and Specifications, incorporated by reference, see § 572.210.

(a) The pelvis assembly (drawing 020–7500) for this test may include either a uniaxial pubic load cell (drawing SA572–S7) or a pubic load cell structural replacement (drawing 020–7150) installed on the non-impact side of the pelvis.

(b) When the center of the pelvis of a completely assembled dummy (drawing 020–0100) is impacted laterally by a test probe conforming to § 572.219 at 4.0 ± 0.1 m/s according to the test procedure in paragraph (c) of this section:

(1) The peak force, measured by the impact probe as defined in § 572.219 and calculated in accordance with paragraph (b)(2) of this section, shall have a value between 1587 N and 1901 N.

(2) The force shall be calculated by the product of the impactor mass and its measured deceleration.

(c) The test procedure for the pelvis assembly is as follows:

(1) The dummy is clothed in the Q3s suit (drawing 020–8001). No additional clothing or shoes are placed on the dummy.

(2) Soak the dummy in a controlled environment at any temperature between 20.6 and 22.2 °C (69 and 72 °F) and a relative humidity from 10 to 70 percent for at least four hours prior to a test.

(3) The pelvis test is carried out in the direction opposing the primary load vector of the ensuing full scale test for which the dummy is being qualified. A left pelvis test set-up that is used to qualify the dummy for an ensuing full scale left side impact is depicted in figure W11 in appendix A to this subpart. A right pelvis test set-up would be a mirror image of that shown in figure W11. Seat the dummy on the qualification bench described in figure V3 to § 572.194, the seat pan and seat back surfaces of which are covered with thin sheets of PTFE (Teflon) (nominal stock thickness: 2 to 3 mm) along the impact side of the bench.

(4) Position the dummy on the bench as shown in figure W11 in appendix A to this subpart, with the ribs making contact with the seat back oriented 24.6 degrees relative to vertical, the legs extended forward along the seat pan oriented 21.6 degrees relative to horizontal with the knees spaced 40 mm apart. The arms should be positioned so that the arm on the non-impacted side is parallel to the seat back with the lower arm perpendicular to the upper arm, and the arm on the impacted side is positioned upwards away from the pelvis.

(5) Establish the impact point at the center of the pelvis so that the impact point of the longitudinal centerline of the probe is located 185 mm from the center of the knee pivot screw (part #020–9008) and centered vertically on the femur.

(6) Impact the pelvis with the test probe so that at the moment of contact the probe's longitudinal centerline should be horizontal (±1 degrees), and the centerline of the probe should be within 2 mm of the center of the pelvis.

(7) Guide the test probe during impact so that there is no significant lateral, vertical, or rotational movement.

(8) No suspension hardware, suspension cables, or any other attachments to the probe, including the velocity vane, shall make contact with the dummy during the test.

§ 572.219 Test conditions and instrumentation.

All assemblies and drawings referenced in this section are contained in Drawings and Specifications, incorporated by reference, see § 572.210.

(a) The following test equipment and instrumentation is needed for qualification as set forth in this subpart:

(1) The test probe for shoulder, thorax, and pelvis impacts is of rigid metallic construction, concentric in shape, and symmetric about its longitudinal axis. It has a mass of 3.81 ± 0.02 kg and a minimum mass moment of inertia of 560 kg-cm^2 in yaw and pitch about the CG. One-third (⅓) of the weight of the suspension cables and their attachments to the impact probe is included in the calculation of mass, and such components may not exceed five percent of the total weight of the test probe. The impacting end of the probe, perpendicular to and concentric with the longitudinal axis, is at least 25.4 mm long, and has a flat, continuous, and non-deformable 70.0 ± 0.25 mm diameter face with an edge radius between 6.4–12.7 mm. The probe's end opposite to the impact face has provisions for mounting of an accelerometer with its sensitive axis collinear with the longitudinal axis of the probe. No concentric portions of the impact probe may exceed the diameter of the impact face. The impact probe shall have a free air resonant frequency of not less than 1000 Hz, which may be determined using the procedure listed in the PADI (incorporated by reference, see § 572.210).

(2) Head accelerometers have dimensions, response characteristics, and sensitive mass locations specified in drawing SA572–S4 and are mounted in the head as shown in drawing 020–0100, sheet 2 of 5.

(3) The upper neck force and moment transducer has the dimensions, response characteristics, and sensitive axis locations specified in drawing SA572–S8 and is mounted in the head-neck assembly as shown in drawing 020–0100, sheet 2 of 5.

(4) The angular rate sensors for the fore-aft neck flexion and lateral neck flexion qualification tests have the dimensions and response characteristics specified in drawing SA572–S58 and are mounted in the headform and on the pendulum as shown in figures W3 and W4 in appendix A to this subpart.

(5) The string potentiometer shoulder deflection transducers have the dimensions and response characteristics specified in drawing SA572–S38 or SA572–S39 and are mounted to the torso assembly as shown in drawing 020–0100, sheet 2 of 5.

(6) The IR–TRACC thorax deflection transducers have the dimensions and response characteristics specified in drawing SA572–S37 and are mounted to the torso assembly as shown in drawing 020–0100, sheet 2 of 5.

(7) The lumbar spine force and moment transducer has the dimensions, response characteristics, and sensitive axis locations specified in drawing SA572–S8 and is mounted in the torso assembly as shown in drawing 020–0100, sheet 2 of 5.

(8) The angular rate sensors for the fore-aft lumbar flexion and lateral lumbar flexion qualification tests have the dimensions and response characteristics specified in drawing SA572–S58 and are mounted in the headform and on the pendulum as shown in figures W9, W10 in appendix A to this subpart.

(b) The following instrumentation may be required for installation in the dummy for compliance testing. If so, it is installed during qualification procedures as described in this subpart:

(1) The optional angular rate sensors for the head have the dimensions and response characteristics specified in any of drawings SA572–S55, SA572–S56, SA572–S57 or SA572–S58 and are

mounted in the head as shown in drawing 020–0100, sheet 2 of 5.

(2) The upper spine accelerometers have the dimensions, response characteristics, and sensitive mass locations specified in drawing SA572–S4 and are mounted in the torso assembly as shown in drawing 020–0100, sheet 2 of 5.

(3) The pelvis accelerometers have the dimensions, response characteristics, and sensitive mass locations specified in drawing SA572–S4 and are mounted in the torso assembly as shown in drawing 020–0100, sheet 2 of 5.

(4) The T1 accelerometer has the dimensions, response characteristics, and sensitive mass location specified in drawing SA572–S4 and is mounted in the torso assembly as shown in drawing 020–0100, sheet 2 of 5.

(5) The lower neck force and moment transducer has the dimensions, response characteristics, and sensitive axis locations specified in drawing SA572–S8 and is mounted to the neck assembly as shown in drawing 020–0100, sheet 2 of 5.

(6) The tilt sensor has the dimensions and response characteristics specified in drawing SA572–S44 and is mounted to the torso assembly as shown in drawing 020–0100, sheet 2 of 5.

(7) The pubic force transducers have the dimensions and response characteristics specified in drawing SA572–S7 and are mounted in the torso assembly as shown in drawing 020–0100, sheet 2 of 5.

(c) The outputs of transducers installed in the dummy and in the test equipment specified by this part are to be recorded in individual data channels that conform to SAE J211 (incorporated by reference, see § 572.210) except as noted, with channel frequency classes (CFCs) as follows:

(1) Pendulum acceleration, CFC 180,

(2) Pendulum angular rate, CFC 60,

(3) Neck twist fixture rotation, CFC 60,

(4) Test probe acceleration, CFC 180,

(5) Head accelerations, CFC 1000,

(6) Headform angular rate, CFC 60,

(7) Neck moments, upper and lower, CFC 600,

(8) Shoulder deflection, CFC 180,

(9) Thorax deflection, CFC 180,

(10) Upper spine accelerations, CFC 180,

(11) T1 acceleration, CFC 180,

(12) Pubic force, CFC 180,

(13) Pelvis accelerations, CFC 1000.

(d) Coordinate signs for instrumentation polarity are to conform to SAE J1733 (incorporated by reference, see § 572.210).

(e) The mountings for sensing devices have no resonant frequency less than 3 times the frequency range of the applicable channel class.

(f) Limb joints are set at one G, barely restraining the weight of the limb when it is extended horizontally. The force needed to move a limb segment is not to exceed 2G throughout the range of limb motion.

(g) Performance tests of the same component, segment, assembly, or fully assembled dummy are separated in time by not less than 30 minutes unless otherwise noted.

(h) Surfaces of dummy components may not be painted except as specified in this subpart or in drawings subtended by this subpart.

Appendix A to Subpart W of Part 572—Figures

BILLING CODE 4910–59–P

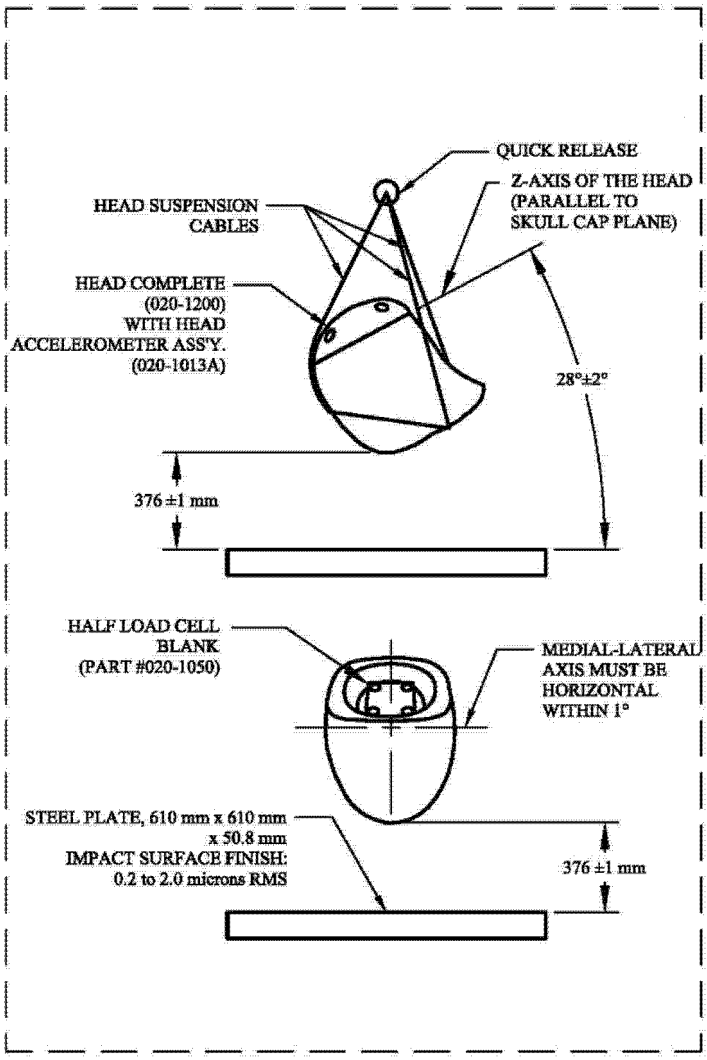

Figure W1. Frontal head drop test set-up specifications.

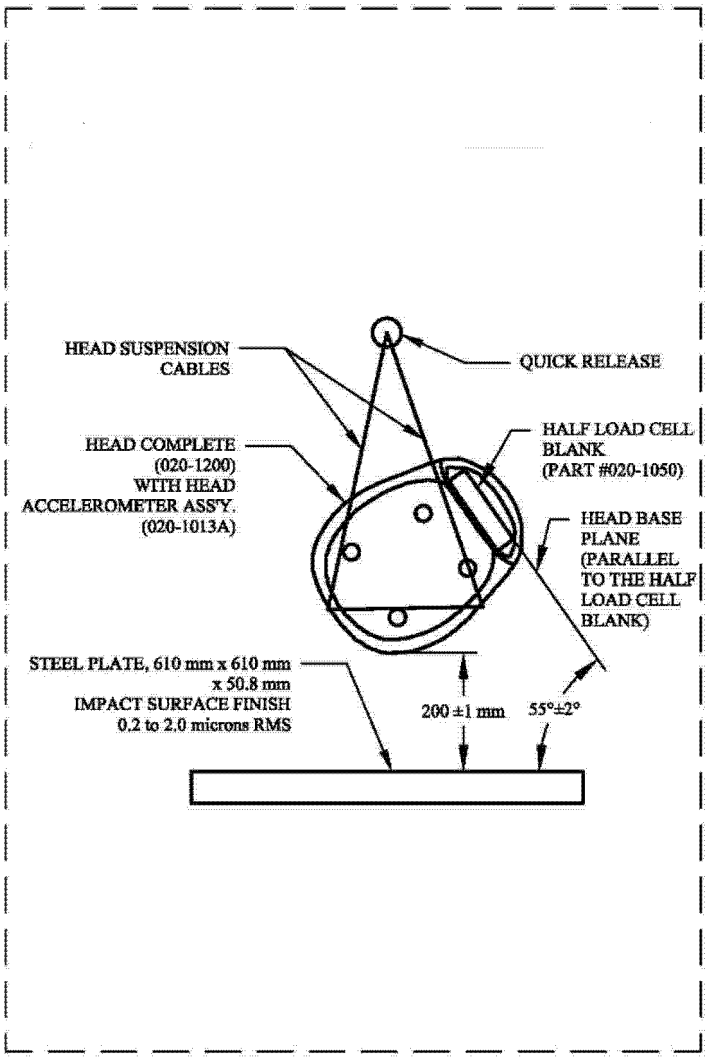

Figure W2. Lateral head drop test set-up specifications.

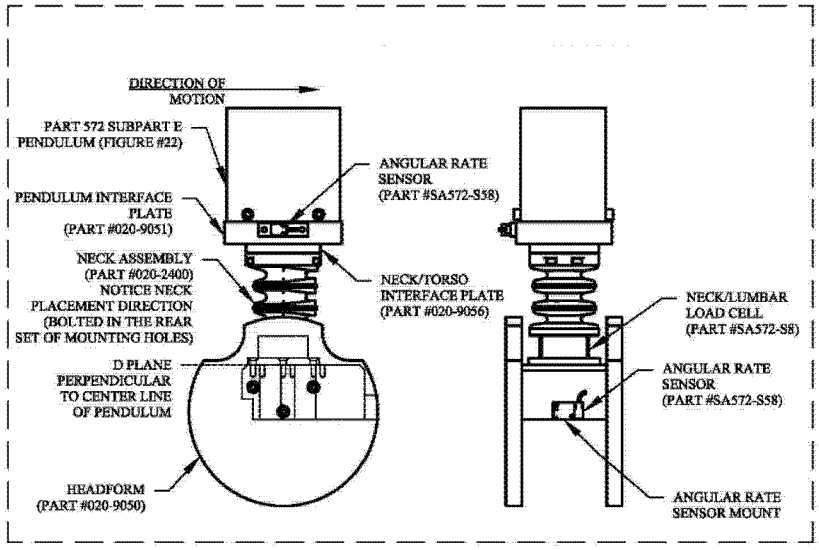

Figure W3. Neck frontal flexion test set-up specifications.

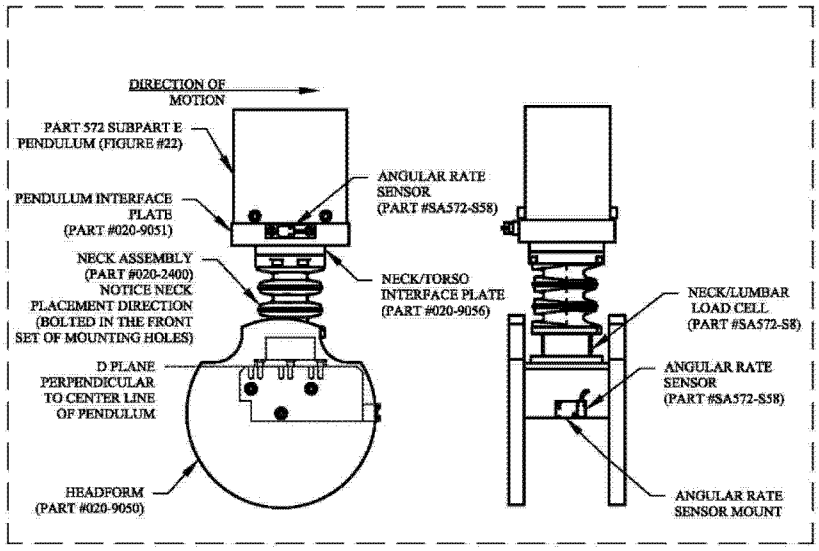

Figure W4. Neck lateral flexion test set-up specifications.

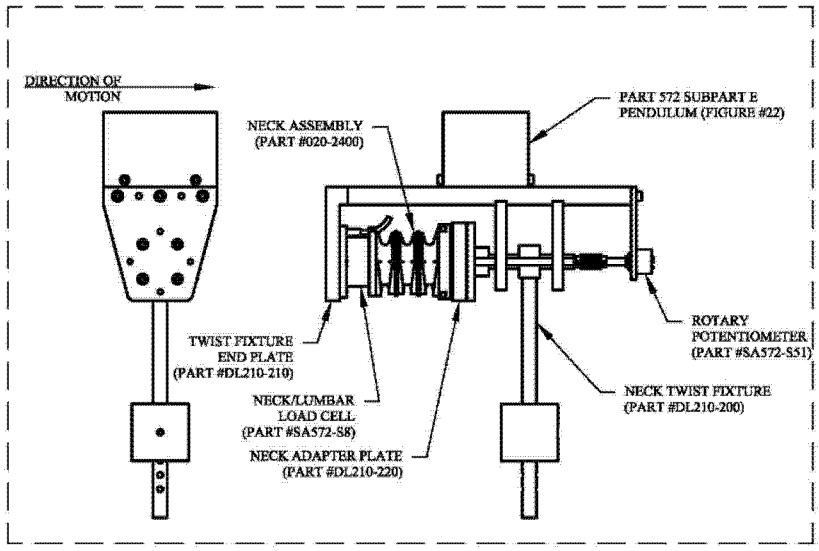

Figure W5. Neck torsion test set-up specifications.

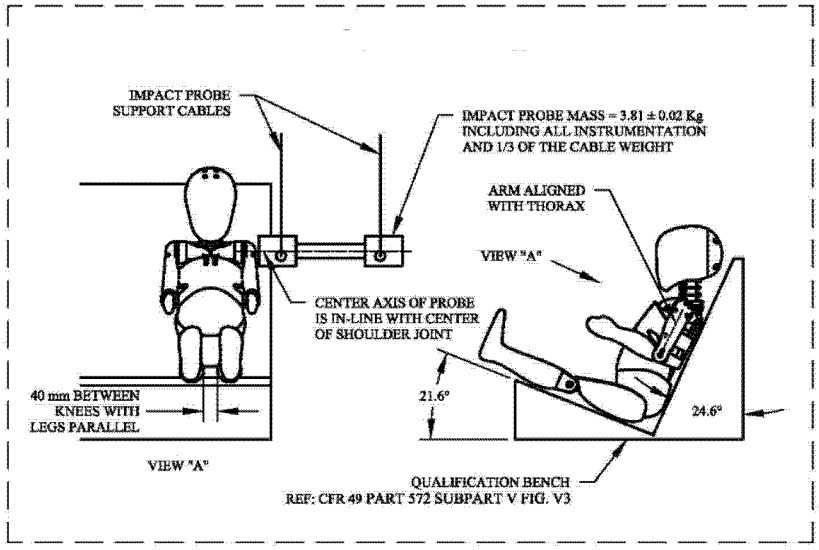

Figure W6. Lateral shoulder impact test set-up specifications.

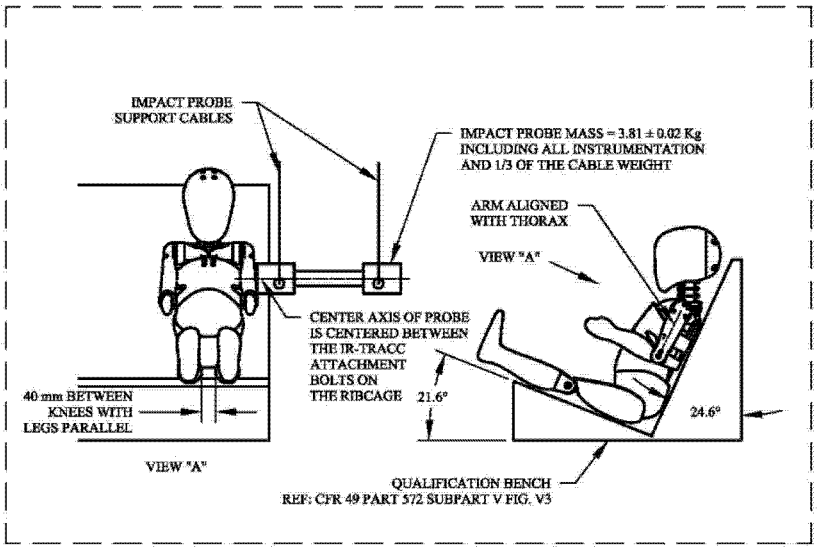

Figure W7. Lateral thorax with arm impact test set-up specifications.

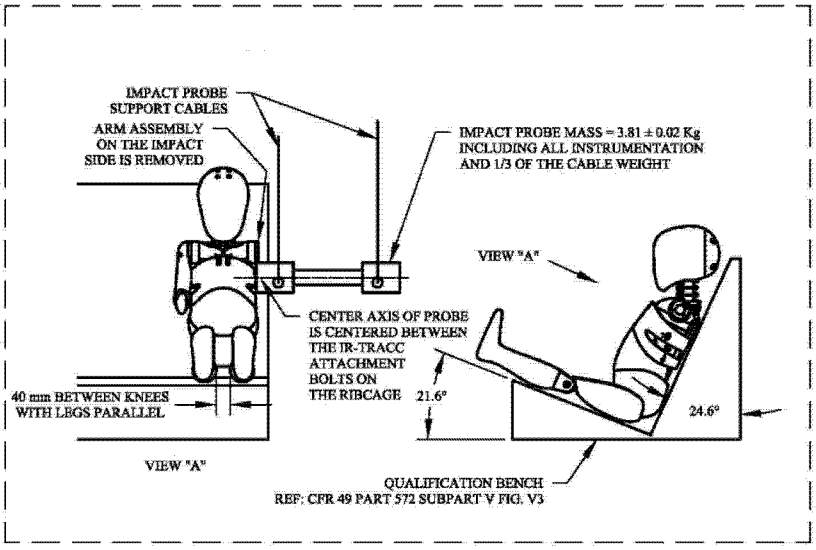

Figure W8. Lateral thorax without arm impact test set-up specifications.

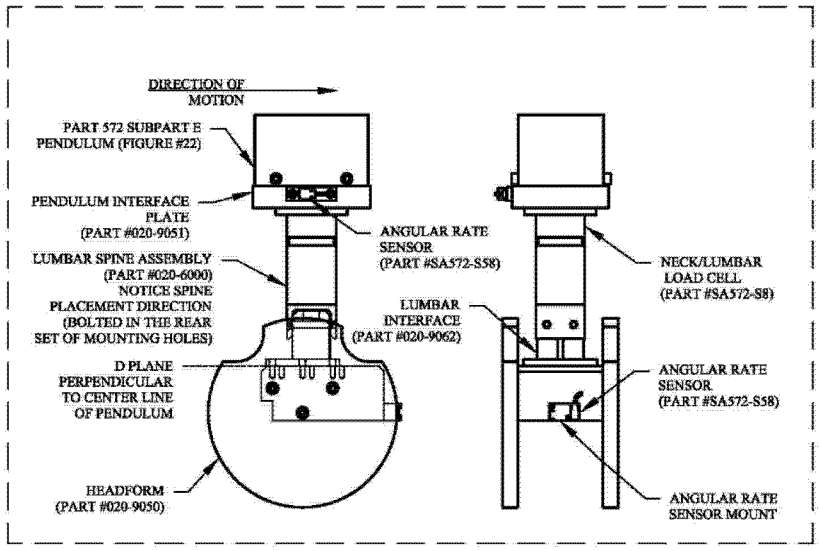

Figure W9. Lumbar frontal flexion test set-up specifications.

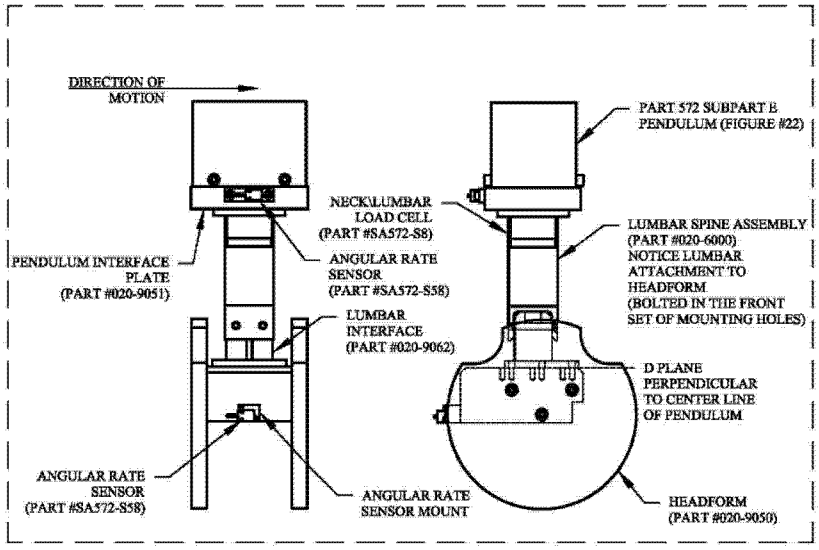

Figure W10. Lumbar lateral flexion test set-up specifications.

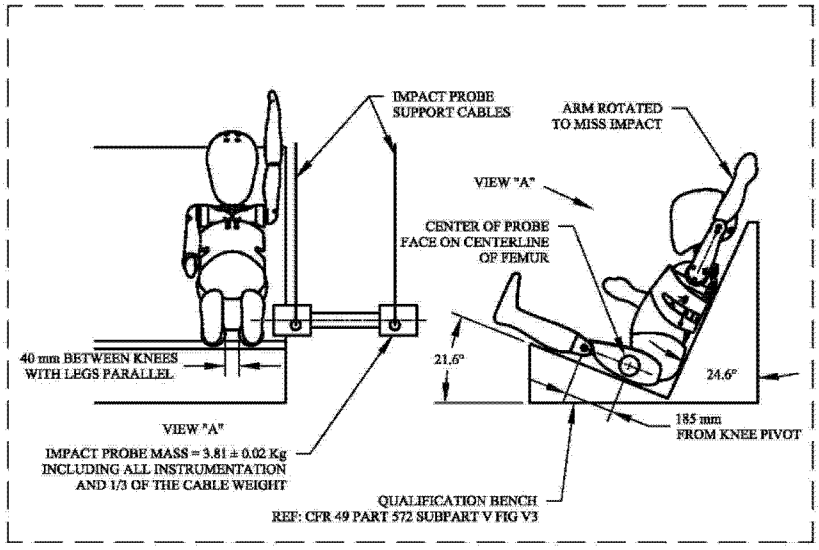

Figure W11. Pelvis lateral impact test set-up specifications.

James C. Owens,

Deputy Administrator.

[FR Doc. 2020–21478 Filed 11–2–20; 8:45 am]

BILLING CODE 4910–59–C

FEDERAL REGISTER

Vol. 85 Tuesday,

No. 213 November 3, 2020

Part V

Department of Housing and Urban Development

Removal and Archiving of Additional Obsolete and Superseded Guidance Documents; Notice

DEPARTMENT OF HOUSING AND URBAN DEVELOPMENT

[Docket No.: FR–6216–N–01]

Removal and Archiving of Additional Obsolete and Superseded Guidance Documents

AGENCY: Office of the Secretary, HUD.

ACTION: Notice.

SUMMARY: This notice announces that the Department has completed a second review of administrative guidance and identified guidance documents that should no longer be in effect or are deemed unnecessary and obsolete as part of the Department's implementation of Executive Order 13891, ''Promoting the Rule of Law Through Improved Agency Guidance Documents.'' HUD is removing and archiving these documents on HUD's program websites to reduce compliance burdens, promote regulatory analysis, provide fair notice, and reduce administrative due process. The removal and archiving of these materials will make it easier for HUD constituents and members of the public to determine HUD guidance that currently applies. In some cases, documents may continue to be accessible in an online archive, such as for historical or research purposes. Guidance documents posted in an online archive shall no longer have effect and shall not be cited except to establish historical fact.

FOR FURTHER INFORMATION CONTACT: For questions about Community Planning and Development documents, contact Larry B. Jackson II, Program Advisor to the Assistant Secretary, Office of Community Planning and Development, Department of Housing and Urban Development, 451 7th Street SW, Washington, DC 20410–8000; telephone number 202–402–5433. For questions about Office of Fair Housing and Equal Opportunity documents, contact Tiffany Taylor, Office of Fair Housing and Equal Opportunity, Department of Housing and Urban Development, 451 7th Street SW, Washington, DC 20410–8000; telephone number 202–402–7094. For questions about Office of Housing documents, contact Paul M. Olin, Management Analyst, Office of Housing, Department of Housing and Urban Development, 451 7th Street SW, Washington, DC 20410–8000; telephone number 202–402–3672. For questions about Office of Lead Hazard Control and Healthy Homes documents, contact Warren Friedman, Ph.D., Office of Lead Hazard Control and Healthy Homes, Department of Housing and Urban Development, 451 7th Street SW, Washington, DC 20410–3000; telephone number 202–402–7698. For questions about Public and Indian Housing documents, contact Merrie Nichols-Dixon, Director, Office of Policy, Programs, and Legislative Initiatives, Office of Public and Indian Housing, Department of Housing and Urban Development, 451 7th Street SW, Washington, DC 20410–8000; telephone number 202–402–4673 (these are not toll-free numbers). Hearing- and speech-impaired persons may access these numbers through TTY by calling the Federal Relay Service at 800–877–8339 (this is a toll-free number).

SUPPLEMENTARY INFORMATION: On February 24, 2017, the President issued Executive Order 13777, entitled ''Enforcing the Regulatory Reform Agenda.'' See, 82 FR 12285. Among other things, section 2(iv) of this Executive Order requires agencies to terminate, consistent with applicable law, ''programs and activities that derive from or implement Executive Orders, guidance documents, policy memoranda, rule interpretations, and similar documents, or relevant portions thereof, that have been rescinded.'' Consistent with this Executive Order, the Department took steps to evaluate existing regulations and guidance to identify those that may merit repeal, replacement, or modification. See, *e.g.,* 82 FR 22344, May 15, 2017 (seeking comments on regulations that may be outdated) and 83 FR 3635, January 26, 2018 (review of manufactured housing rules). As part of this effort, in 2019 the Department conducted a review of its administrative guidance documents and identified those that are unnecessary and obsolete. 84 FR 13695, April 5, 2019.[1]

On October 9, 2019, the President issued Executive Order 13891, titled ''Promoting the Rule of Law Through Improved Agency Guidance Documents.'' 84 FR 55235. Section 3(b) of this Executive Order requires each agency to ''review its guidance documents and, consistent with applicable law, rescind those guidance documents that it determines should no longer be in effect.'' The Department has conducted another comprehensive review as part of its continuing effort to comply with Executive Orders 13777 and 13891.

Due to the multiplicity of guidance documents, which includes large numbers of expired guidance documents, some of which date back many years, HUD has determined that it may be difficult for members of the public to readily determine which guidance currently applies to HUD-related activities. Furthermore, HUD's program web pages provide a great deal of information about HUD's policies, but may be difficult for the public and HUD's constituents to use because they do not clearly delineate which policy documents are currently applicable. There is no single source that identifies HUD's rescinded and expired guidance documents, with the result that it can be difficult to ascertain which guidance documents are no longer in effect. This may increase the difficulty and cost of compliance.

To reduce this burden and reduce costs of compliance, HUD identified guidance documents that are unnecessary and obsolete, expired, or should no longer be in effect. This notice announces that HUD is removing or archiving these identified guidance documents from its main program websites. This will result in a large reduction of documents that members of the public have to sift through to find relevant materials. For historical and research purposes, some of the former guidance may be placed into an archive. The archive will be clearly marked as such to avoid confusion. Guidance documents posted in an archive shall no longer have effect and shall not be cited except to establish historical fact.

In order to clarify which guidance documents are no longer in effect, the Appendices following this notice list the guidance documents that HUD is removing or archiving pursuant to this initiative. HUD, at this time, is removing or archiving 2,335 guidance documents. Removal or archiving of obsolete guidance documents assures the public that the documents posted on HUD's website are currently in effect, as required by Executive Order 13891.

Environmental Impact

[1] Please note that in the **Federal Register** publication, the headings of the ''Arch.'' And ''Remove'' columns were inadvertently reversed.

This notice does not direct, provide for assistance or loan and mortgage insurance for, or otherwise govern or regulate, real property acquisition, disposition, leasing, rehabilitation, alteration, demolition, or new construction, or establish, revise or provide for standards for construction or construction materials, manufactured housing, or occupancy. Accordingly, under 24 CFR 50.19(c)(1), this notice is categorically excluded from environmental review under the National Environmental Policy Act of 1969 (42 U.S.C. 4321).

Benjamin S. Carson, Sr.,

Secretary.

APPENDIX A—PUBLIC AND INDIAN HOUSING NOTICES

	Name of document	Date	Arch	Remove
1	Revised Section 184 Indian Housing Loan Guarantee Program 2018 Loan Limits • Attachment.	9/14/2018	X	
2	Section 184 Indian Housing Loan Guarantee Program 2018 Loan Limits	4/30/2018	X	
3	Extension—Total Development Costs (TDC) for Affordable Housing under the Native American Housing Assistance and Self-Determination Act of 1996 (NAHASDA). • Attachment 1.	5/4/2016	X	
4	Extension—Total Development Costs (TDC) for Affordable Housing under the Native American Housing Assistance and Self-Determination Act of 1996 (NAHASDA). • Attachment.	6/26/2015	X	
5	Administrative Requirements for Investing Indian Housing Block Grant (IHBG) Funds	5/8/2015	X	
6	Section 184 Indian Loan Guarantee Program Processing Guidelines	9/16/2014	X	
7	Depository Agreements for Investing and Administering Indian Housing Block Grant (IHBG) Funds. • Attachment A. • Attachment B.	9/15/2014	X	
8	Extension—Total Development Costs (TDC) for Affordable Housing under the Native American Housing Assistance and Self-Determination Act of 1996 (NAHASDA). • Attachment 1.	6/19/2014	X	
9	Extension—Total Development Costs (TDC) for Affordable Housing under the Native American Housing Assistance and Self-Determination Act of 1996 (NAHASDA). • Attachment 1.	1/30/2013	X	
10	Extension—Recipient Inspection of Housing Units Assisted under the Native American Housing Assistance and Self-Determination Act of 1996 (NAHASDA) and Those Assisted Under the United States Housing Act of 1937.	8/26/2012	X	
11	Extension—Total Development Costs (TDC) for Affordable Housing under the Native American Housing Assistance and Self-Determination Act of 1996 (NAHASDA). • Attachment 1.	11/2/2011	X	
12	Extension—Recipient Inspection of Housing Units Assisted under the Native American Housing Assistance and Self-Determination Act of 1996 (NAHASDA) and Those Assisted Under the United States Housing Act of 1937.	8/26/2011	X	
13	Accessibility Requirements for Native American Programs: Section 504 of the Rehabilitation Act of 1973; Americans with Disabilities Act of 1990; Architectural Barriers Act of 1968; and Fair Housing Amendments Act of 1988.	7/21/2011	X	
14	Indian Housing Plan/Annual Performance Report Form	4/28/2011	X	
15	Implementation of Statutory Change to the Native American Housing Assistance and Self-Determination Act of 1996 (NAHASDA) related to Income.	3/18/2011	X	
16	Recapture Provisions for Native American Housing Block Grant (NAHBG) Funds Authorized under the American Recovery and Reinvestment Act of 2009.	2/8/2011	X	
17	Native American Housing Assistance and Self-Determination Act (NAHASDA) Interim Funding for Tribes or Tribally Designated Housing Entities (TDHE) in Fiscal Year (FY) 2011.	1/27/2011	X	
18	Income exclusion under temporary employment by U.S. Census Bureau	9/22/2010	X	
19	Extension—Recipient Inspection of Housing Units Assisted under the Native American Housing Assistance and Self-Determination Act of 1996 (NAHASDA) and Those Assisted Under the United States Housing Act of 1937.	8/31/2010	X	
20	Demonstration Program—Self-Determined Housing Activities for Tribal Governments	8/17/2010	X	
21	Reinstatement—PIH Notice 2009–6 (TDHEs)—Administrative Requirements for Investing Indian Housing Block Grant (IHBG) Funds.	8/6/2010	X	
22	Reinstatement—PIH Notice 2009–7 (TDHEs)—Depository Agreements for Recipients of the Indian Housing Block Grant (IHBG) Program.	8/6/2010	X	
23	Reinstatement of PIH Notice 2009–05, Accessibility Requirements for Native American Programs: Section 504 of the Rehabilitation Act of 1973; Americans with Disabilities Act of 1990; Architectural Barriers Act of 1968; and Fair Housing Amendments Act of 1988.	7/27/2010	X	
24	Extension—Establishing a Micro Purchase Process for Purchases Less Than $5,000 for Indian Housing Block Grant (IHBG) Recipients.	5/7/2010	X	
25	Statutory Changes to the Native American Housing Assistance and Self-Determination Act of 1996 (NAHASDA).	12/3/2009	X	
26	Federal Financial Report—Standard Form 425	11/16/2009	X	
27	Extension—Recipient Inspection of Housing Units Assisted under the Native American Housing Assistance and Self Determination Act of 1996 (NAHASDA) and Those Assisted Under the United States Housing Act of 1937.	8/19/2009	X	
28	Total Development Costs (TDC) for Affordable Housing under the Native American Housing Assistance and Self-Determination Act of 1996 (NAHASDA). • Attachment—TDC Limits.	8/10/2009	X	

APPENDIX A—PUBLIC AND INDIAN HOUSING NOTICES—Continued

	Name of document	Date	Arch	Remove
29	Extension—PIH Notice 2008–26 (HA)—Income exclusion under temporary employment by U.S. Census Bureau.	6/30/2009	X	.....
30	Extension—Guidance on Integrated Pest Management (IPM)	5/18/2009	X	.....
31	Establishing a Micro Purchase Process for Purchases Less than $5,000 for Indian Housing Block Grant (IHBG) Recipients.	5/18/2009	X	.....
32	Reinstatement—Depository Agreements for Recipients of the Indian Housing Block Grant (IHBG) Program.	3/5/2009	X	.....
33	Administrative Requirements for Investing Indian Housing Block Grant (IHBG) Funds	3/5/2009	X	.....
34	Extension—PIH Notice 2008–6 (TDHEs)—Accessibility Requirements for Native American Programs: Section 504 of the Rehabilitation Act of 1973; Americans with Disabilities Act of 1990; Architectural Barriers Act of 1968; and Fair Housing Amendments Act of 1988.	1/26/2009	X	.....
35	Limiting Housing to Indian Families or Tribal Members When Using Indian Housing Block Grant (IHBG) funds.	1/26/2009	X	.....
36	Total Development Costs (TDC) for Affordable Housing under the Native American Housing Assistance and Self-Determination Act of 1996 (NAHASDA). • Attachment.	8/20/2008	X	.....
37	Income exclusion under temporary employment by U.S. Census Bureau	6/24/2008	X	.....
38	Limiting Housing to Indian Families or Tribal Members when using Indian Housing Block Grant (IHBG) funds.	1/25/2008	X	.....
39	Reinstatement—PIH Notice 2006–38—Accessibility Requirements for Native American Programs: Section 504 of the Rehabilitation Act of 1973; Americans with Disabilities Act of 1990; Architectural Barriers Act of 1968; and Fair Housing Amendments Act of 1988.	1/23/2008	X	.....
40	Native American Housing Assistance and Self-Determination Act (NAHASDA) Interim Funding for Tribes or Tribally Designated Housing Entities (TDHE) in Fiscal Year (FY) 2008.	1/22/2008	X	.....
41	Reinstatement—Notice PIH 2005–4 (HA), Exigent Health and Safety Deficiency Correction Certification—New Reporting Procedures.	12/28/2007	X	.....
42	Disaster Housing Assistance Program (DHAP)—Revisions to the Operating Requirements.	11/6/2007	X	.....
43	PIH Notice 2007–30 Using ENERGY STAR to Promote Energy Efficiency in Public Housing.	10/24/2007	X	.....
44	PIH Notice 2007–29 Reporting Requirements and Sanctions Policy under the Housing Choice Voucher Program for the Family Report (Form HUD–50058) into the Public and Indian Housing Information Center.	10/10/2007	X	.....
45	Changes in the Project Numbering System and Process for Requesting Changes in Project Identifications.	8/27/2007	X	.....
46	Disallowed Costs and Sanctions Resulting from On-Site Monitoring Reviews	8/24/2007	X	.....
47	Disaster Housing Assistance Program (DHAP) Operating Requirements	8/16/2007	X	.....
48	Extension—Notice 2006–32, ''Public Housing Agency (PHA) Cost-Saving Initiatives in the Housing Choice Voucher (HCV) Program''.	8/14/2007	X	.....
49	Administrative Requirements for Investing Indian Housing Block Grant (IHBG) Funds	8/10/2007	X	.....
50	$100 Million Set-Aside Provision to Adjust Public Housing Agencies Baseline Funding, Housing Choice Voucher Program CY 2007.	8/1/2007	X	.....
51	Submission of Calendar Year 2007 Notices of Intent and Fungibility Plans by PHAs in Hurricane Katrina and Rita Disaster Areas Authorized to Combine Section 8(o) and 9(d)(e) Funding Under Section 901 of 2006 Emergency Supplemental Appropriations, as Extended by 2007 Emergency and Supplemental Appropriations.	7/31/2007	X	.....
52	Guidance on Methods and Schedules for Calculating Federal Fiscal Year (FFY) 2008 Operating Subsidy Eligibility.	7/23/2007	X	.....
53	Impact of Non-Parental Child-Only Welfare Grants on Families Participating in the Family Self-Sufficiency (FSS) Program.	6/6/2007	X	.....
54	Extension—Public Housing Development Cost Limits ..... • Attachment.	6/29/2007	X	.....
55	Extension—Housing Choice Voucher Program—Enhanced Vouchers—Adjustment of Voucher Housing Assistance Payments for Certain Families that Received ''Preservation'' Voucher Assistance as the Result of an Owner Prepayment or Voluntary Termination of Mortgage Insurance for a Preservation Eligible Property in Federal Fiscal Year (FY) 1997, FY 1998, and FY 1999.	6/27/2007	X	.....
56	Disaster Voucher Program (DVP)—Extension of the DVP and Revised Term for the Waiver of Tenant Contribution.	6/21/2007	X	.....
57	Operating Fund Program: Guidance on Demonstration of Successful Conversion to Asset Management to Discontinue the Reduction of Operating Subsidy, Year 1 and Year 2 Applications.	6/18/2007	X	.....
58	Implementation of Federal Fiscal Year 2007 Funding Provisions for the Housing Choice Voucher Program.	6/18/2007	X	.....
59	Certification of accuracy of data in the Public Housing Information Center System used to calculate the Capital Fund formula allocation in Fiscal Year 2007.	6/15/2007	X	.....
60	Guidance on Integrated Pest Management	5/24/2007	X	.....

APPENDIX A—PUBLIC AND INDIAN HOUSING NOTICES—Continued

	Name of document	Date	Arch	Remove
61	Extension Notice PIH 2006–17 (TDHE), Total Development Costs (TDC) for Affordable Housing under the Native American Housing Assistance and Self-Determination Act of 1996 (NAHASDA). • Attachment.	4/30/2007	X	.....
62	Voucher Funding In Connection with the Demolition or Disposition of Occupied Public Housing Units.	4/30/2007	X	.....
63	Updated Changes in Financial Management and Reporting Requirements for Public Housing Agencies Under the New Operating Fund Rule (24 CFR part 990). • Supplement. • Comments.	4/10/2007	X	.....
64	Extension Notice PIH 2006–15 (HA), Single Audit Act (A–133) Independent Auditor Report Submission for Public Housing Agencies (PHAs).	3/22/2007	X	.....
65	Guidance on Appeals under Subpart G of the Revisions to the Public Housing Operating Fund Program, Final Rule, Published in the **Federal Register** on September 19, 2005 (79 FR 54983).	3/13/2007	X	.....
66	Process for Public Housing Agency Voluntary Transfers of Housing Choice Vouchers, Project-Based Vouchers and Project-Based Certificates.	3/7/2007	X	.....
67	Revised Voucher Housing Assistance Payments Contract (Form HUD 52641) and Tenancy Addendum (form HUD 52641A); Housing Choice Voucher Program Administration and the Violence Against Women and Justice Department Reauthorization Act of 2005 (VAWA 2005).	2/16/2007	X	.....
68	Extension Disaster Voucher Program (DVP) Operating Requirements Rental Assistance for HUD-Assisted Families and Special Needs Families Displaced by Hurricanes Katrina and Rita.	2/4/2007	X	.....
69	Reoccupancy Policies for Pre-Disaster HUD-Assisted and Special Needs Families Displaced by Hurricanes Katrina and Rita.	1/23/2007	X	.....
70	Native American Housing Assistance and Self-Determination Act (NAHASDA) Interim Funding for Tribes or Tribally Designated Housing Entities (TDHE) in Fiscal Year (FY) 2007.	1/23/2007	X	.....
71	Violence Against Women and Justice Department Reauthorization Act 2005 Form HUD–50066.	12/27/2006	X	.....
72	Verification of Social Security (SS) and Supplemental Security Income (SSI) Benefits	12/19/2006	X	.....
73	Accounting for Fixed Asset Depreciation and Related Issues	10/19/2006	X	.....
74	Reinstatement of Notice PIH 2005–21—Accessibility Notice for Native American Program: Section 504 of the Rehabilitation Act of 1973; the Americans with Disabilities Act of 1990; the Architectural Barriers Act of 1968; and the Fair Housing Amendments Act of 1988.	10/16/2006	X	.....
75	Changes to Disaster Voucher Program (DVP) Operating Requirements Family	9/28/2006	X	.....
76	Guidance on Unit Status Categories in the Development Sub-module of the Office of Public and Indian Housing (PIH).	9/26/2006	X	.....
77	Operating Fund Program Final Rule: Transition Funding and Guidance on Demonstration of Successful Conversion to Asset Management to Discontinue the Reduction of Operating Subsidy Participation Extension of Stop Loss Deadline to April 15, 2007.	9/25/2006	X	.....
78	Limiting Housing to Indian Families or Tribal Members when using Indian Housing	9/25/2006	X	.....
79	Changes in Financial Management and Reporting Requirements for Public Housing ..... • Attachment.	9/6/2006	X	.....
80	Public Housing Agency (PHA) Cost-Savings Initiatives in the Housing Choice Voucher (HCV) Program.	8/21/2006	X	.....
81	Extension Notice PIH 2005–32 (HA) HUD PIH Notice for Demolition/Disposition	8/18/2006	X	.....
82	Guidance on Methods and Schedules for Calculating Federal Fiscal Year (FFY) 2007 Operating Subsidy Eligibility.	8/17/2006	X	.....
83	Disaster Voucher Program (DVP) Supplemental Guidance: Voucher Program	7/28/2006	X	.....
84	Extension Depository Agreements for Recipients of the Indian Housing Block Grant (IHBG) Program.	7/26/2006	X	.....
85	Reinstatement—Homeless Initiative in Public Housing and Housing Choice Voucher Programs.	7/7/2006	X	.....
86	Extension Housing Choice Voucher Program Enhanced Vouchers Adjustment of Voucher Housing Assistance Payments for Certain Families that Received Preservation Voucher Assistance as the Result of an Owner Prepayment or Voluntary Termination of Mortgage Insurance for a Preservation Eligible Property in Federal Fiscal Year (FY) 1997, FY 1998, and FY 1999.	6/30/2006	X	.....
87	Extension—Housing Choice Voucher Portability Procedures and Corrective Actions—Revision of Family Portability Information, Form HUD–52665.	7/3/2006	X	.....
88	Correction to PIH–2006–24 Revised Reporting Requirements and Sanctions Policy for the Family Report (Form HUD–50058) to the Office of Public and Indian Housing (PIH) Information Center (PIC).	6/30/2006	X	.....
89	Implementation of the Violence Against Women and Justice Department Reauthorization Act 2005.	6/23/2006	X	.....
90	Public Housing Development Cost limits ..... • Attachment.	6/21/2006	X	.....
91	Reinstatement—Notice PIH 2005–5(HA) New Freedom Initiative, Executive Order	6/16/2006	X	.....
92	Financial Audit Requirements	6/7/2006	X	.....

APPENDIX A—PUBLIC AND INDIAN HOUSING NOTICES—Continued

	Name of document	Date	Arch	Remove
93	Reinstatement of PIH Notice 2004–17, Recipient Inspection of Housing Units Assisted Under the Native American Housing Assistance and Self-Determination Act of 1996 (NAHASDA) and those Assisted Under the 1937 Housing Act.	6/5/2006	X	.....
94	Fiscal Year 2006 Capital Fund Grants Processing Notice	5/31/2006	X	.....
95	Total Development Costs (TDC) for Affordable Housing under the Native American ..... • Attachment.	4/17/2006	X	.....
96	Project-Based Voucher Units with Low-Income Housing Tax Credit Allocations	3/29/2006	X	.....
97	Extension—Notice PIH 2005–11 (HA), Single Audit Act (A–133)	3/23/2006	X	.....
98	Operating Fund Program Final Rule: Transition Funding and Guidance	3/22/2006	X	.....
99	Non-Discrimination and Accessibility for Persons with Disabilities	3/8/2006	X	.....
100	Disaster Voucher Program (DVP) Operating Requirements—Rental Assistance for HUD-Assisted Families and Special Needs Families Displaced by Hurricanes Katrina and Rita.	2/3/2006	X	.....
101	Identification of Projects for Asset Management	2/3/2006	X	.....
102	Extension—Notice PIH 2005–4 (HA), Exigent Health and Safety Deficiency	1/27/2006	X	.....
103	Extension—Notice PIH 2005–3 (HA), Changes to Guidebook 7401.7 G, Housing Agency (HA) Guidebook: Employee Benefit Plans.	1/27/2006	X	.....
104	Guidance on Energy Performance Contract with terms up to 20 years	2/1/2006	X	.....
105	Implementation of the 2006 HUD Appropriations Act (Pub. L. 109–115)	1/13/2006	X	.....
106	Native American Housing Assistance and Self-Determination Act (NAHASDA) Funding ..	1/12/2006	X	.....
107	Reduction of Annual Contributions Contract (ACC) Reserves, Rescission of Requirements Under form HUD–52681 for Most Housing Choice Voucher Program Units, and Sanctions for Failure to Submit Required Financial Reports Pursuant to 24 CFR 5.801.	1/11/2006	X	.....
108	Extension—Notice PIH 2004–25 (TDHEs), Clarification of submission dates for the form HUD–272–I Federal Cash Transactions Report ONAP (REV).	1/3/2006	X	.....
109	Income calculation and verification guidance regarding the Medicare Prescription Drug Plan—Part D Program.	12/9/2005	X	.....
110	Katrina Disaster Housing Assistance Program (KDHAP) Operating Requirements	12/1/2005	X	.....
111	Guidance on Methods and Schedules for Calculating Federal Fiscal Year (FFY) 2006 Operating Subsidy Eligibility and Issuance of Local Inflation Factors, Formula Expense Level Equation Multipliers, and Related Tables. • Appendix 1. • Appendix 2. • Appendix 3. • Appendix 4.	11/15/2005	X	.....
112	Information Regarding Implementation of the Final Rule to the Public Housing Operating Fund Program, 24 CFR part 990.	11/2/2005	X	.....
113	Reissuance of Section Eight Management Assessment Program (SEMAP) Guidance to HUD Field Offices Assisting SEMAP Troubled, Near-Troubled and Non-Troubled PHAs.	10/25/2005	X	.....
114	Demolition/Disposition Processing Requirements Under the 1998 Act	8/31/2005	X	.....
115	Federal Fiscal Year (FFY) 2006 Initial Determination and Obligation of Operating Subsidy.	8/22/2005	X	.....
116	Revised Implementation of the Housing Choice Voucher Program Administrative Fee Reduction and Recapture Provisions of the Fiscal Year 2003 Appropriations Act.	8/5/2005	X	.....
117	Project-Based Vouchers on the Family Report (Form HUD–50058)	8/3/2005	X	.....
118	Extension—Housing Choice Voucher Portability Procedures and Corrective Actions—Revision of Family Portability Information, Form HUD–52665.	7/15/2005	X	.....
119	Transition of Operating Subsidy Funding to a Calendar Year Basis and Associated Modifications to the Federal Fiscal Year 2005 Calculation of Operating Subsidy.	7/12/2005	X	.....
120	Public Housing Development Cost limits—(Attachment) ..... • Attachment.	7/13/2005	X	.....
121	Using ENERGY STAR to Promote Energy Efficiency in Public Housing	7/13/2005	X	.....
122	Housing Choice Voucher Program—Enhanced Vouchers—Adjustment of Voucher Housing Assistance Payments for Certain Families that Received ''Preservation'' Voucher Assistance as the Result of an Owner Prepayment or Voluntary Termination of Mortgage Insurance for a Preservation Eligible Property in Federal Fiscal Year (FY) 1997, FY 1998, and FY 1999.	7/8/2005	X	.....
123	Depository Agreements for Recipients of the Indian Housing Block Grant (IHBG) Program.	7/7/2005	X	.....
124	Fiscal Year 2005 Capital Fund Grants Processing Notice	6/24/2005	X	.....
125	Reinstatement—Notice PIH 2003–26 (TDHEs), Accessibility Notice for Native American Program: Section 504 of the Rehabilitation Act of 1973; the Americans with Disabilities Act of 1990; the Architectural Barriers Act of 1968; and the Fair Housing Amendments Act of 1988.	6/22/2005	X	.....
126	Reinstatement—Units with Low-Income Housing Tax Credit Allocations Combined with Housing Choice Voucher Assistance under the Tenant-Based and Project-Based Programs.	6/22/2005	X	.....
127	Limiting Housing to Indian Families or Tribal Members when using Indian Housing Block Grant (IHBG) Funds.	6/21/2005	X	.....
128	Calendar Year 2005 Administrative Fee Funding for the Housing Choice Voucher Program.	6/15/2005	X	.....

APPENDIX A—PUBLIC AND INDIAN HOUSING NOTICES—Continued

	Name of document	Date	Arch	Remove
129	Reporting Requirements for the Family Report (Form HUD–50058) to the Public Housing Information Center (PIC).	6/15/2005	X	.....
130	Policy Guidance on College Student Admissions	6/15/2005	X	.....
131	Reinstatement of Notice PIH 2004–4 (HA), Submission and Processing of Public Housing Agency (PHA) Applications for Housing Choice Vouchers for Relocation or Replacement Housing Related to Demolition or Disposition (Including HOPE VI), and Plans for Removal (Required/Voluntary Conversion Under Section 33 of the U.S. Housing Act of 1937, As Amended, and Mandatory Conversion Under Section 202 of the Omnibus Consolidated Rescissions and Appropriations Act of 1996) of Public Housing Units.	4/26/2005	X	.....
132	Calendar Year 2005 Administrative Fee Funding for Homeownership Voucher Program Implementation and Closings.	4/22/2005	X	.....
133	Extension—Notice PIH 2004–5 (HA) HUD PIH Notice for Mixed-Finance Development of Operating Subsidy-Only Projects.	4/21/2005	X	.....
134	Continuation of Implementation of the Public and Indian Housing Information Center (PIC) Demolition/Disposition Sub-module for Application Submission and Data Collection for Public Housing Unit Removals.	4/19/2005	X	.....
135	Single Audit Act (A–133) Independent Auditor Report Submission for Public Housing Agencies (PHAs).	3/29/2005	X	.....
136	Posting of Class Action Notice (Taylor vs. Jackson, Civil Action No. 02–cv–1120AA)—Fairness Hearing for Proposed Settlement of Litigation Concerning Enhanced Vouchers Provided in Connection with Preservation Prepayments that Occurred in Federal Fiscal Years (FYs) 1997, 1998, and 1999.	3/23/2005	X	.....
137	Public Housing Agency (PHA) Flexibility to Manage the Housing Choice Voucher Program in 2005.	2/25/2005	X	.....
138	Implementing Risk Analyses for Monitoring Community Planning and Development Grant Programs for FY 2006.	9/12/2005	X	.....
139	Rental Integrity Monitoring (RIM) Disallowed Costs and Sanctions Under the Rental Housing Integrity Improvement Project (RHIIP) Initiative.	2/22/2005	X	.....
140	New Freedom Initiative, Executive Order 13217: ''Community-Based Alternatives for Individuals with Disabilities,'' and the Housing Choice Voucher Program.	2/1/2005	X	.....
141	Exigent Health and Safety Deficiency Correction Certification New Reporting Procedures	1/18/2005	X	.....
142	Changes to Guidebook 7401.7 G, ''Housing Agency (HA) Guidebook: Employee Benefit Plans''.	1/13/2005	X	.....
143	Implementation of the Consolidated Appropriations Act (H.R. 4818 H. Rept. 108–792), 2005 Funding Provisions for the Housing Choice Voucher Program.	12/8/2004	X	.....
144	Clarification of submission dates for the form HUD–272–I Federal Cash Transactions Report ONAP (REV).	12/10/2004	X	.....
145	Income calculation and verification guidance regarding Medicare Prescription Drug Cards and Transitional Assistance.	11/10/2004	X	.....
146	Extension—Notice PIH 2003–30 (HAs) Budget Line Items for the Resident Opportunities and Self-Sufficiency Program (ROSS) in the Line of Credit Control System/Voice Response System for Fiscal Year (FY) 2003.	11/30/2004	X	.....
147	Extension—Notice PIH 2003–14 (TDHEs), Administrative Requirements for Investing Indian Housing Block Grant Funds.	11/30/2004	X	.....
148	Elimination of The Use Of Code ''5'' In Line 3q of The Form HUD 50058 In Reporting Compliance With Public Housing Community Service And Self-Sufficiency Requirements.	10/4/2004	X	.....
149	Notice on Designating an Indian Area for the Section 184 Indian Housing Loan Guarantee (Section 184) Program.	9/29/2004	X	.....
150	Verification of Social Security (SS) and Supplemental Security Income (SSI) Benefits	9/17/2004	X	.....
151	Recipient Inspection of Housing Units Assisted Under the Native American Housing Assistance and Self-Determination Act of 1996 (NAHASDA) and those Assisted Under the 1937 Housing Act.	8/18/2004	X	.....
152	Section Eight Management Assessment Program (SEMAP) Guidance to HUD Field Offices Assisting SEMAP Troubled and Near-Troubled PHAs.	8/18/2004	X	.....
153	Fiscal Year 2004 Capital Fund Grants Processing Notice	8/9/2004	X	.....
154	Guidance on Methods and Schedules for Calculating Federal Fiscal Year (FFY) 2005 Operating Subsidy Eligibility and Issuance of Local Inflation Factors, Formula Expense Level Equation Multipliers, and Related Tables. • Appendix 1. • Appendix 2. • Appendix 3. • Appendix 4.	8/9/2004	X	.....
155	New Codes for Special Programs Reported on the Family Report (Form HUD–50058) ...	8/5/2004	X	.....
156	Housing Choice Voucher Portability Procedures and Corrective Actions—Revision of Family Portability Information, Form HUD–52665.	7/19/2004	X	.....
157	Income calculation regarding Medicare Prescription Drug Cards and Transitional Assistance.	7/15/2004	X	.....
158	Certification Reviews of Public Housing Agencies by the Office of Public and Indian Housing.	6/1/2004	X	.....

APPENDIX A—PUBLIC AND INDIAN HOUSING NOTICES—Continued

	Name of document	Date	Arch	Remove
159	Operating Fund—Final Proration Factor for Federal Fiscal Year (FFY) 2003 and Processing Notes for FFY 2004.	5/25/2004	X	.....
160	Extension—Notice PIH 2003–15 (TDHEs), Performing Reporting Requirements and Grant Close-Out Procedures for the Indian Housing Drug Elimination Program (IHDEP).	5/7/2004	X	.....
161	Implementation of FFY 2004 Consolidated Appropriations Act Provisions for the Housing Choice Voucher Program.	4/22/2004	X	.....
162	Extension-Public Housing Development Cost Limits	4/1/2004	X	.....
163	Submission and Processing of Public Housing Agency (PHA) Applications for Housing Choice Vouchers for Relocation or Replacement Housing Related to Demolition or Disposition (Including HOPE VI), and Plans for Removal (Required/Voluntary Conversion Under Section 33 of the U.S. Housing Act of 1937, As Amended, and Mandatory Conversion Under Section 202 of the Omnibus Consolidated Rescissions and Appropriations Act of 1996) of Public Housing Units.	3/29/2004	X	.....
164	Extension-Demolition/Disposition Processing Requirements Under the 1998 Act	3/29/2004	X	.....
165	Excess Utility Consumption Charges Permissible Under the Flat Rent Option for Checkmetered Units.	3/15/2004	X	.....
166	Verification Guidance ..... • Attachment.	3/9/2004	X	.....
167	Rental Integrity Monitoring (RIM) Disallowed Costs and Sanctions Under the Rental Housing Integrity Improvement Project (RHIIP) Initiative (Revised).	12/19/2003	X	.....
168	Implementation of the Public and Indian Housing Information Center (PIC) Demolition/Disposition Sub-module and Data Collection for Public Housing Unit Removals.	12/19/2003	X	.....
169	Extension-Notice PIH 2002–22 (HA), Units with Low-Income Housing Tax Credit Allocations Combined with Housing Choice Voucher Assistance Under the Tenant-Based and Project-Based Programs.	12/5/2003	X	.....
170	Accessibility Notice: Section 504 of the Rehabilitation Act of 1973; the Americans with Disabilities Act of 1990; the Architectural Barriers Act of 1968 and the Fair Housing Act of 1988.	11/26/2003	X	.....
171	Budget Line Items for the Resident Opportunities and Self-Sufficiency Program (ROSS) in the Line of Credit Control System/Voice Response System for Fiscal Year (FY) 2003.	11/17/2003	X	.....
172	Reinstatement—Notice PIH 2002–17 (TDHEs), Financial Audit Requirements	10/24/2003	X	.....
173	Guidance to Public Housing Agencies on Providing Information to Law Enforcement on Possible Fleeing Felons.	10/24/2003	X	.....
174	Accessibility Notice for Native American Program: Section 504 of the Rehabilitation Act of 1973; the Americans with Disabilities Act of 1990; the Architectural Barriers Act of 1968; and the Fair Housing Amendments Act of 1988.	10/24/2003	X	.....
175	Homeless Initiative in Public Housing and Housing Choice Voucher Programs	10/3/2003	X	.....
176	Implementation of FFY 2003 Omnibus Appropriations Act Provisions for the Housing Choice Voucher Program. • Attachment 1—Example of Renewal Funding Calculations—Funding Cap Does Not Apply. • Attachment 2—Example of Renewal Funding Calculations—Funding Cap Applies. • Attachment 3—Examples of Administrative Fee Analysis and Recapture.	9/22/2003	X	.....
177	Guidance on Methods and Schedules for Calculating Federal Fiscal Year (FFY) 2004 Operating Subsidy Eligibility and Issuance of Local Inflation Factors, Formula Expense Level Equation Multipliers, and Related Tables. • Attachment 1 and 2. • Attachment 3 and 4.	9/11/2003	X	.....
178	Deregulation for Small Public Housing Agencies (PHAs) and Submission Requirements for New Small PHA Streamlined Annual PHA Plans.	9/9/2003	X	.....
179	Housing Choice Voucher Program—Homeownership Option PHA Reporting Requirements.	8/29/2003	X	.....
180	Fiscal Year 2003 Capital Fund Grants Processing Notice	7/23/2003	X	.....
181	Federal Fiscal Year (FFY) 2003 Issuance of Instructions for Adjustments and Revisions to Operating Subsidy Eligibility, and Updated Information on Proration Factor and Approval of Calculations.	7/28/2003	X	.....
182	Reinstatement of the Community Service and Self-Sufficiency Requirement	7/20/2003	X	.....
183	Total Development Costs (TDC) for Affordable Housing under the Native American Housing Assistance and Self-Determination Act of 1996 (NAHASDA). • Attachment.	6/19/2003	X	.....
184	Extension—Notice PIH 2002–11 (TDHEs), Performance Reporting Requirements and Grant Close-Out Procedures for the Indian Housing Drug Elimination Program (IHDEP).	5/23/2003	X	.....
185	Reinstatement—Notice PIH 2001–21 (TDHEs), Administrative Requirements of Investing Indian Housing Block Grant Funds.	5/23/2003	X	.....
186	Reinstatement—Notice PIH 2001–39 (ONAP), Line of Credit Control System (LOCCS/VRS) for the Indian Housing Block Grant Program.	5/23/2003	X	.....
187	Determination of Rent Reasonableness—Revision of Request for Tenancy Approval, Form HUD–52517.	5/16/2003	X	.....

APPENDIX A—PUBLIC AND INDIAN HOUSING NOTICES—Continued

	Name of document	Date	Arch	Remove
188	Instructions for Obtaining Federal Bureau of Investigation Criminal History Record Information.	4/11/2003	X	.....
189	Capital Fund—Replacement Housing Factor Funding-Instructions ..... • Attachment.	4/4/2003	X	.....
190	Demolition/Disposition Processing Requirements Under the 1998 Act ..... • Attachment 1. • Attachment 2.	3/27/2003	X	.....
191	Public Housing Development Cost limits ..... • Attachment.	3/27/2003	X	.....
192	Reinstatement—Notice PIH 2001–26 (HA), PHA Plan Guidance; Further Streamlining of Small PHA Plan; Early Availability of Capital Formula Funding for Obligation; Extension of Notices PIH 99–33 (HA), PIH 99–51 (HA), PIH 2000–22 (HA), PIH 2000–43 (HA) and PIH 2001–4 (HA).	2/25/2003	X	.....
193	Native American Housing Assistance and Self-Determination Act (NAHASDA) Funding for Tribes or Tribally Designated Housing Entities (TDHE) in Fiscal Year (FY) 2003.	1/30/2003	X	.....
194	Federal Fiscal Year (FFY) 2003 Guidance on Determination of Operating Subsidy Eligibility, Schedule for the Submission of Operating Subsidy Calculations, Issuance of Proration Factor and Approval of Calculations. • Appendices.	1/6/2003	X	.....
195	Extension—Notice PIH 2001–38 (HA), Demolition/Disposition Processing Requirements under the New Law.	11/6/2002	X	.....
196	Units with Low-Income Housing Tax Credit Allocations Combined with Housing Choice Voucher Assistance under the Tenant-Based and Project-Based Programs.	11/1/2002	X	.....
197	Financial Audit Requirements	6/28/2002	X	.....
198	Housing Choice Voucher Program, Procedures for Voluntary Reduction of Baseline Units.	6/7/2002	X	.....
199	Extension—Notice PIH 2001–19 (TDHEs), Performance Reporting Requirements and Grant Close-Out Procedures for the Indian Housing Drug Elimination Program (IHDEP).	5/24/2002	X	.....
200	PIH 2001–8 (HA) Termination of Tenancy for Criminal Activity	3/29/2002	X	.....
201	Federal Fiscal Year (FFY) 2002 Proration Factor, Dwelling Rental Adjustment Factor, and Other Special Notes.	3/27/2002	X	.....
202	Housing Choice Voucher Program: PHA Administrative Fees	3/12/2002	X	.....
203	Housing Choice Voucher Annual Contributions Contract (ACC) Reserves	3/8/2002	X	.....
204	FY 2002 Operating Fund Local Inflation Factors, Formula Expense Level Equation Multipliers, and Related Tables.	3/6/2002	X	.....
205	Single Audit Act (A–133) Independent Auditor Report Submission for Public Housing Agencies.	2/11/2002	X	.....
206	Reinstatement—Notice PIH 2000–41 (HA), Use of Housing Choice Vouchers in Assisted Living Facilities.	1/6/2002	X	.....
207	Cancellation of HUD Forms	1/6/2002	X	.....
208	Accessibility Notice: Section 504 of the Rehabilitation Act of 1973; the Americans with Disabilities Act of 1990; the Architectural Barriers Act of 1968 and the Fair Housing Act of 1988.	1/22/2002	X	.....
209	Reinstatement—Notice PIH 2000–31 (HA), Implementation of the Special Application Center (SAC).	12/28/2001	X	.....
210	December 2001 Semi-Annual Assessment Process for the Public and Indian Housing Information Center (PIC) Form 50058 Reporting.	12/5/2001	X	.....
211	Total Development Costs (TDC) for Affordable Housing under the Native American Housing Assistance and Self-Determination Act of 1996 (NAHASDA). • TDC Final Rule-official printed Notice. • TDCs.	11/30/2001	X	.....
212	Operation Enduring Freedom	11/14/2001	X	.....
213	Extension—Notice PIH 2000–44 (ONAP), Line of Credit Control System (LOCCS/VRS) for the Indian Housing Block Grant Program and updates for Form HUD–272–I and Form HUD–27054.	11/13/2001	X	.....
214	Reinstatement of Notice PIH 99–19 (HA), Demolition/Disposition Processing Requirements under the New Law and Extension Notice PIH 2000–16 (HA).	11/1/2001	X	.....
215	Extension—Notice PIH 2000–50 (HA), Resources Available to Assist Public Housing Agencies Promote Energy Conservation.	10/29/2001	X	.....
216	Submission of Operating Subsidy Eligibility Requests	10/26/2001	X	.....
217	Technical Corrections to PIH Notice 2001–29, Fiscal Year 2001 Financial Management Requirements for Section 8 Moderate Rehabilitation (Mod Rehab) Housing Assistance Payments (HAP) Contract Expirations.	10/10/2001	X	.....
218	Extension of Notice PIH 2000–39 (HA), Annual Resident Survey for the Public Housing Drug Elimination Program (PHDEP).	9/20/2001	X	.....
219	Housing Choice Voucher Program—Conversion of Certificate Assistance to Voucher Assistance.	8/24/2001	X	.....
220	Submission of Operating Subsidy Eligibility Requests for FY 2001, Proration Factor, and Other Special Notes.	8/24/2001	X	.....

APPENDIX A—PUBLIC AND INDIAN HOUSING NOTICES—Continued

	Name of document	Date	Arch	Remove
221	Extension—Notice PIH 2000–37 (TDHEs), Indian Housing Block Grant Program: Guidance and procedures if Tribes do not assume environmental review responsibilities under 24 CFR part 58.	8/15/2001	X	.....
222	Extension—Notice PIH 2000–26 (TDHEs), Native American Housing Assistance and Self-Determination Act (NAHASDA)—Indian Housing Block Grant (IHBG) Program—Performance Measure for the Obligation of Funds.	8/9/2001	X	.....
223	FY 2001 Operating Fund Local Inflation Factors, Formula Expense Level Equation Multipliers, and Related Tables.	8/7/2001	X	.....
224	Implementation of Public Law 106–504 regarding the eligibility of the citizens of the Freely Associated States for federally assisted housing.	8/3/2001	X	.....
225	PHA Plan Guidance; Further Streamlining of Small PHA Plans; Early Availability of Capital Formula Funding for Obligation; Extension of Notices PIH–33 (HA), PIH 99–51 (HA), PIH 2000–22 (HA), PIH 2000–36 (HA), PIH 2000–43 (HA) and PIH 2001–4 (HA).	8/2/2001	X	.....
226	Reinstatement—Notice PIH 2000–10 (TDHEs), Providing Assistance to Non Low-Income Indian Families under the Native American Housing Assistance and Self-Determination Act of l996.	7/23/2001	X	.....
227	Public Housing Development Cost limits Year 2001 ..... • Attachment.	7/12/2001	X	.....
228	Extension—Notice PIH 2000–21 (TDHEs), Administrative Requirements for Investing Indian Housing Block Grant Funds.	7/21/2001	X	.....
229	Submission and Processing of Public Housing Agency (PHA) Applications in Fiscal Year (FY) 2001 for Housing Choice Vouchers for Relocation or Replacement Housing Related to Demolition or Disposition (Including HOPE VI), and Plans for Removal (Mandatory Conversion) of Public Housing Units Under Section 33 of the U.S. Housing Act of 1937, As Amended.	7/21/2001	X	.....
230	Performance Reporting Requirements and Grant Close-Out Procedures for the Indian Housing Drug Elimination Program (IHDEP).	6/5/2001	X	.....
231	Extension—Notice PIH 2000–20 (HA), which extended Notice PIH 99–21 (HA), Requirements for Designation of Public Housing Projects.	5/16/2001	X	.....
232	Reinstatement—Notice PIH 2000–47 (HA), Public Housing Development Total Development Cost (TDC) and Cost Control Policy.	5/2/2001	X	.....
233	Improving Income Integrity in Public and Assisted Housing ..... • Appendix.	5/2/2001	X	.....
234	Extension—Notice PIH 2000–18 (TDHEs), Accounting for program income under the Native American Housing Assistance and Self-Determination Act (NAHASDA).	5/2/2001	X	.....
235	Reprogramming of Public Housing Drug Elimination Program (PHDEP) Special Initiative Funds and Recapturing of Gun Buy Back Matching Funds.	3/30/2001	X	.....
236	Adjusted Implementation Date of Revised Form HUD–50058, Family Report	3/29/2001	X	.....
237	Conversion of Regular Housing Choice Vouchers to Enhanced Vouchers for Families affected by Section 8 Project-based Housing Assistance Payment (HAP) Contract Terminations and Expirations (Including Moderate Rehabilitation Contracts) in Federal Fiscal Years (FYs) 1995, 1996, 1997, 1998, and 1999.	3/28/2001	X	.....
238	Funding of Dire Emergency Utility Costs in the Low Rent Public Housing Program ..... • Attachment A. • Attachment B. • Attachment C.	3/19/2001	X	.....
239	Termination of Tenancy for Criminal Activity	3/13/2001	X	.....
240	Guidance for HUD Field Offices to Conduct Annual Section 8 Management Assessment Program (SEMAP) Assessments.	1/24/2001	X	.....
241	Guidance for Implementation of Direction Contained in the Conference Report 106–988 for the Department's Fiscal Year 2001 Appropriations Act.	1/19/2001	X	.....
242	Instructions for Submitting Second Public Housing Agency (PHA) Plans for PHAs with Fiscal Years beginning on July 1, 2001 and Capital Performance and Evaluation Reporting Requirements for January and April 2001 PHAs. • Attachment.	1/19/2001	X	.....
243	Interim Instructions on Distribution and Use of Operating Subsidy Funds Received for Resident Participation Activities.	1/18/2001	X	.....
244	Prohibition of Discrimination Against Families with Housing Choice Vouchers by Owners of Low-Income Housing Tax Credit and HOME Developments.	1/18/2001	X	.....
245	Guidance for Implementation of the October 2, 2000 Interim Rule on Increased Fair Market Rents (FMRs) and Higher Payment Standards for Certain Areas.	1/3/2001	X	.....
246	Revised Annual Performance Report, form HUD–52735–A	12/18/2000	X	.....
247	Information Update: Implementation of Revised Form HUD–50058, Family Report	12/15/2000	X	.....
248	Voluntary Expression of Interest in Moving to Work Demonstration Program	12/13/2000	X	.....
249	Extension—Notice PIH 99–50 (HA), which extended Notice PIH 98–53 (HA), Inter-agency Agreement with the Army Corps of Engineers to Conduct Public Housing Development/Major Inspections/Reviews on Behalf of the Department of Housing and Urban Development (HUD).	12/12/2000	X	.....
250	Resources Available to Assist Public Housing Agencies Promote Energy Conservation ..	11/20/2000	X	.....
251	Housing Choice Voucher Program and Rental Certificate Program: PHA Administrative Fees for Lead-Based Paint Hazard Clearance Tests and Risk Assessments.	10/27/2000	X	.....

APPENDIX A—PUBLIC AND INDIAN HOUSING NOTICES—Continued

	Name of document	Date	Arch	Remove
252	Federal Labor Standards in Public Housing Programs • Attachment.	10/18/2000	X	.....
253	Extension—Notice PIH 2000–25 (HA), Public Housing Development Total Development Cost (TDC) and Cost Control Policy.	10/16/2000	X	.....
254	Housing Choice Voucher Program—Area Exception Payment Standard Review and Reporting Instructions. • Attachment.	9/28/2000	X	.....
255	Correction to Notice PIH 99–52 (HA), Section 504 of the Rehabilitation Act of 1973; the Americans with Disabilities Act of 1990; the Architectural Barriers Act of 1968 and the Fair Housing Act of 1988.	9/20/2000	X	.....
256	PHA Plan Guidance; Streamlining of Small PHA Plans; Extension of Notices PIH 99–33 (HA) and PIH 99–51 (HA).	9/18/2000	X	.....
257	The HUD Public Housing Fellows (HUD Fellows) Program • Attachment.	9/11/2000	X	.....
258	Use of Housing Choice Vouchers in Assisted Living Facilities	9/1/2000	X	.....
259	PROCESSING OF GRANT APPLICATIONS FOR FISCAL YEAR (FY) 2000—Indian Housing Drug Elimination Program (IHDEP). • Appendices 1–4. • Appendices 5–6. • Appendix 7—IHDEP Notice of Funding Availability (NOFA), May 11, 2000. • Appendix 8—Amendment to IHDEP NOFA, June 9, 2000.	8/29/2000	X	.....
260	Annual Resident Survey for the Public Housing Drug Elimination Program (PHDEP)	8/23/2000	X	.....
261	Performance Reporting Requirements and Grant Closeout Procedures for the Public Housing Drug Elimination Program (PHDEP).	8/21/2000	X	.....
262	Extension—Notice PIH 99–37 (ONAP), Indian Housing Block Grant Program: Guidance and procedures if Tribes do not assume environmental review responsibilities under 24 CFR part 58.	8/21/2000	X	.....
263	Transmittal of Guidance on the Requirement for Appointment and Role of Resident Advisory Boards in the Development of Public Housing Agency Plans.	8/21/2000	X	.....
264	Potential Electricity Shortages in California	8/18/2000	X	.....
265	Requirement to Send Section 8 Management Assessment Program (SEMAP) Certification via the Internet. • Attachment.	8/17/2000	X	.....
266	Extension—Notice PIH 99–29 (TDHEs), Form HUD–272–I—Federal Cash Transactions Report ONAP.	8/16/2000	X	.....
267	Extension—Guidance for Housing Agencies when handling Asbestos Containing Materials (ACMs) in Public Housing Modernization or Demolition.	8/16/2000	X	.....
268	Extension—Notice PIH 99–30 (HA), Implementation of the Special Application Center (SAC) and Additional Review Responsibilities of the SAC.	8/14/2000	X	.....
269	Dwelling Construction and Equipment (DC&E) Costs for Affordable Housing under the Native American Housing Assistance and Self-Determination Act of 1996 (NAHASDA). • Attachment.	8/14/2000	X	.....
270	Reinstatement and Extension of Notice PIH 97–48 (HA), Inter-agency Agreement with the Army Corps of Engineers to Conduct Modernization Inspections on behalf of the Department of Housing and Urban Development (HUD); Original Notice PIH 94–5 (HA), dated February 5, 1994, expired February 28, 1995.	8/8/2000	X	.....
271	Reinstatement and Extension of Notice PIH 97–48 (HA), Inter-agency Agreement with the Army Corps of Engineers to Conduct Modernization Inspections on behalf of the Department of Housing and Urban Development (HUD); Original Notice PIH 94–5 (HA), dated February 5, 1994, expired February 28, 1995.	8/9/2000	X	.....
272	Submission and Processing of Public Housing Agency (PHA) Applications in Fiscal Year (FY) 2000 for Housing Choice (Section 8) Vouchers for Relocation or Replacement Housing Related to Demolition or Disposition (Including HOPE VI), and Plans for Removal (Mandatory Conversion) of Public Housing Units Under Section 33 of the U.S. Housing Act of 1937, As Amended.	7/28/2000	X	.....
273	Extension—Notice PIH 2000–15 (HA), which extended Notice PIH 99–17 (HA) Public Housing Development Total Development Cost (TDC) and Cost Control Policy.	7/21/2000	X	.....
274	Section 8 Management Assessment Program (SEMAP) Implementation of Ratings and Update. • Attachment.	7/12/2000	X	.....
275	Lead-based paint requirements for units occupied by children with elevated blood lead levels in the housing choice voucher program and the certificate program. • Attachment.	6/29/2000	X	.....
276	Instructions for Submitting First Public Housing Agency (PHA) Plans for PHAs with Fiscal Years beginning on October 1, 2000 (including Community Service Requirements).	6/29/2000	X	.....
277	Reinstatement—Notice PIH 99–4 (TDHEs), Administrative Requirements for Investing Indian Housing Block Grant Funds.	5/24/2000	X	.....
278	Extension—Notice PIH 99–21 (HA), which extended Notice PIH 98–24 (HA), Requirements for Designation of Public Housing Projects.	5/8/2000	X	.....
279	Amendment of Notice PIH 99–46 (HA) Financial Management Requirements for Section 8 Moderate Rehabilitation Program (Mod Rehab) Housing Assistance Payments (HAP) Contract Expirations.	4/18/2000	X	.....

APPENDIX A—PUBLIC AND INDIAN HOUSING NOTICES—Continued

	Name of document	Date	Arch	Remove
280	Extension—Notice PIH 99–19 (HA), Demolition/Disposition Processing Requirements under the New Law.	4/18/2000	X	.....
281	Extension—Notice PIH 99–17 (HA), Public Housing Development Total Development Cost (TDC) and Cost Control Policy.	4/18/2000	X	.....
282	Cancellation of the Requirement to Submit the Program Utilization Report, Form HUD–52683, for Section 8 Tenant-Based Assistance Rental Certificate Program and Housing Choice Voucher Program and Report on Program Utilization for Section 8 Moderate Rehabilitation Program, Form HUD–52685.	4/13/2000	X	.....
283	Reporting Requirements for the Multifamily Tenant Characteristics System (Form HUD–50058).	4/7/2000	X	.....
284	Instructions for Submitting First Public Housing Agency (PHA) Plans for PHAs with Fiscal Years beginning July 1, 2000 and October 1, 2000.	4/7/2000	X	.....
285	Guidance on Establishing Cooperation Agreements for Economic Self-Sufficiency between Public Housing Agencies (PHAs) and Temporary Assistance to Needy Families (TANF) Agencies. • Attachment.	5/9/2000	X	.....
286	Providing Assistance to Non Low-Income Indian Families under the Native American Housing Assistance and Self-Determination Act of 1996.	3/15/2000	X	.....
287	Section 8 Tenant-based Assistance (Enhanced and Regular Housing Choice Vouchers) For Housing Conversion Actions in Federal Fiscal Year (FY) 2000 Policy and Processing Guidance.	3/10/2000	X	.....
288	Extension Notice for Notice PIH 99–12 (HA), Environmental Review: Public Housing and 24 CFR part 58.	2/25/2000	X	.....
289	Reinstatement—Notice PIH 96–50 (HA), Guidelines for Sponsoring or Co-Sponsoring Training Conferences and Workshops.	2/25/2000	X	.....
290	Extension—Notice PIH 99–3 (HA), Budget Line Items for the Consolidated Economic Development and Supportive Services and Tenant Opportunities Program in the Line of Credit Control System/Voice Response System for FY 1997 and FY 1998.	2/15/2000	X	.....
291	Semi-Annual HUDWEB Data Collection (Reporting) Form Instructions for Public Housing Agencies (PHAs) and Indian Housing Authorities (IHAs) selected for funding under the PIH Economic Development and Supportive Services Program (EDSS). • Attachment.	2/15/2000	X	.....
292	FY 2000 Performance Funding System(PFS) Inflation Factor, Equation, and Related Tables and Special Notes Related to Operating Subsidy Eligibility.	2/3/2000	X	.....
293	FY 2000 Subsidies for Operation of Low-Income Housing Projects	2/3/2000	X	.....
294	Customer Survey of Section 8 Tenant-Based Program Participants—OMB Approval 2528–0170 expires 9/30/2002. • Attachment.	1/4/2000	X	.....
295	Exclusion of Earned Income as Census Takers	1/3/2000	X	.....
296	Notice for PIH Hub & PHAs on Y2K	12/20/1999	X	.....
297	Accessibility Notice: Section 504 of the Rehabilitation Act of 1973; the Americans with Disabilities Act of 1990; the Architectural Barriers Act of 1968 and the Fair Housing Act of 1988.	12/15/1999	X	.....
298	Additional Instructions for Submitting First PHA Plans under the Final Rule and Extension of Due Date for Submission of PHA Plans for PHAs with Fiscal Years Beginning January 1, 2000 and April 1, 2000; Guidance for PHAs with Fiscal Years Beginning July 1, 2000 and after; Availability of Required Format for Public Housing Drug Elimination Program (PHDEP) Plan.	12/14/1999	X	.....
299	Extension—Notice PIH 98–53 (HA), which extended Notice PIH 97–53 (HA), Inter-agency Agreement with the Army Corps of Engineers to Conduct Public Housing Development/Major Reconstruction of Obsolete Public Housing (MROP) Inspections/Reviews on Behalf of the Department of Housing and Urban Development (HUD).	12/8/1999	X	.....
300	Extension—Notice PIH 98–48 (HUD), Management and Retention of Section 8 Financial Records.	11/18/1999	X	.....
301	Extension—Notice PIH 99–14 (HA), Fiscal Year 1999 Financial Management Requirements for Section 8 Moderate Rehabilitation Program(Mod Rehab) Housing Assistance Payments (HAP) Contract Expirations.	11/5/1999	X	.....
302	Extension—Notice PIH 98–55 (HA) which extended Notice PIH 97–57 (HA), Section 8 Certificate and Moderate Rehabilitation Programs—Rent Adjustments.	10/6/1999	X	.....
303	Extensions for Notice PIH 98–62 (HA), Fiscal Year 1999 Renewal of Expiring Section 8 Moderate Rehabilitation (Mod Rehab) Housing Assistance Payments (HAP) Contracts and Notice PIH 99–22 (HA) Clarification of PIH Notice 98–62 (HA).	10/1/1999	X	.....
304	Amendment to the Resident Opportunities and Self-Sufficiency (ROSS) Program Notice of Funding Availability (NOFA).	9/29/1999	X	.....
305	Rental Assistance for Non-Elderly Persons With Disabilities in Support of Designated Housing Plans—FY 1999 Application Processing Instructions.	9/24/1999	X	.....
306	Section 8 Management Assessment Program (SEMAP) Technical Amendment and Revised Certification Form.	9/9/1999	X	.....
307	Section 8 Tenant-based Assistance and Housing Conversion Actions Special Fee for Extraordinary Administrative Costs and Processing Guidance.	9/1/1999	X	.....

APPENDIX A—PUBLIC AND INDIAN HOUSING NOTICES—Continued

	Name of document	Date	Arch	Remove
308	Attachment to PIH Notice 99–22 (Clarification of PIH Notice 98–62 Governing FY 99 Renewal of Expiring Section 8 Moderate Rehabilitation Housing Assistance Payments (HAP) Contracts)—Rider to HAP Contract. • Attachment.	8/27/1999	X	.....
309	Comprehensive Improvement Assistance Program (CIAP): Federal Fiscal Year (FFY) 1999 Application Submission, Processing and Fund Reservation.	8/20/1999	X	.....
310	Housing Choice Voucher Rent Formula under the Section 8 Merger Rule, including Form HUD–50058 Instructions. • Attachment.	8/19/1999	X	.....
311	Dwelling Construction and Equipment (DC&E) Costs for Affordable Housing under the Native American Housing Assistance and Self-Determination Act of 1996 (NAHASDA). • Attachment.	8/11/1999	X	.....
312	Announcement of Availability of PHA Plan Template, Instructions and Supplemental Guidance on Preparation and Submission of PHA Plans on HUD Website; Announcement of Streamlining of Capital Fund and Public Housing Drug Elimination Program Planning Requirements.	7/30/1999	X	.....
313	Determination of recipient administrative capacity to undertake the Indian Housing Block Grant (IHBG) program.	7/29/1999	X	.....
314	Guidance for Housing Agencies when handling Asbestos Containing Materials (ACMs) in Public Housing Modernization or Demolition.	7/29/1999	X	.....
315	Reinstatement of PIH Notices 98–28 (HA), Implementation of the Special Application Center (SAC) and 98–44 (HA), Additional Review Responsibilities of the Special Application Center (SAC).	7/28/1999	X	.....
316	Form HUD–272–I—Federal Cash Transactions Report ONAP	7/26/1999	X	.....
317	Guidance on definition of ''public charge'' in immigration laws; questions and answers (Q&As) about ''public charge''. • Attachment.	7/15/1999	X	.....
318	Section 8 Family Self-Sufficiency (FSS) Program—FY 1999 Application Processing Instructions.	7/1/1999	X	.....
319	Submission and Processing of Public Housing Agency (PHA) Applications in Fiscal Year (FY) 1999 for Section 8 Rental Vouchers for Relocation or Replacement Housing Related to Demolition or Disposition (Including HOPE VI), and Plans for Removal (Mandatory Conversion) of Public Housing Units Under Section 33 of the U.S. Housing Act of 1937, As Amended.	7/1/1999	X	.....
320	Processing of Grant Applications for Fiscal Year (FY) 1999 NOFA—Public and Indian Housing Economic Development and Supportive Services (EDSS) Carryover Funding Competition.	6/25/1999	X	.....
321	Reinstatement—Notice PIH 96–18 (HA), Travel Policy for Resident Management/Tenant Opportunities Program Grantees (RM/TOP).	6/24/1999	X	.....
322	Input of Homeownership Data Into the IBS	6/9/1999	X	.....
323	Clarification of PIH Notice 98–62 Governing FY 99 Renewal of Expiring Section 8 Moderate Rehabilitation Housing Assistance Payments (HAP) Contracts. • Attachment.	5/20/1999	X	.....
324	Extension—Notice PIH 98–24 (HA), which reinstated Notice PIH 97–12 (HA), Requirements for Designation of Public Housing Projects.	5/5/1999	X	.....
325	Applications for Demolition/Disposition via the INTERNET using the Demolition Disposition Integrated Subsystem (DDISS).	5/3/1999	X	.....
326	Demolition/Disposition Processing Requirements Under the New Law ..... • Attachment.	4/20/1999	X	.....
327	Public Housing Development Total Development Cost (TDC) and Cost Control Policy .... • Attachment.	3/15/1999	X	.....
328	Tenant-Based Rental Vouchers for Eligible Residents of Preservation Eligible Projects Approved for Prepayment of the Mortgage or Voluntary Termination of the Mortgage Insurance in Federal Fiscal Year (FY) 1999.	3/12/1999	X	.....
329	Budget Preparation for the Transfer of Section 8 Certificates to the Voucher Program	3/8/1999	X	.....
330	Fiscal Year 1999 Financial Management Requirements for Section 8 Moderate Rehabilitation Program (Mod Rehab) Housing Assistance Payments (HAP) Contract Expirations.	2/24/1999	X	.....
331	FY 1999 Subsidies for Operation of Low-Income Housing Projects	2/23/1999	X	.....
332	Extension Notice for Notice PIH 98–9 (HA), which extended Notice PIH 97–8 (HA) Environmental Review: Public Housing and 24 CFR part 58.	2/12/1999	X	.....
333	Fire Safety	2/17/1999	X	.....
334	Extension—Notice PIH 98–1 (HA), which extended Notice PIH 96–92(HA), Lead-Based Paint (LBP) Disclosure Rule Requirements for Public and Indian Housing and Section 8 Rental Certificate, Rental Voucher and Moderate Rehabilitation Programs.	2/11/1999	X	.....
335	Transfer of Section 8 Certificate Program Funding to the Voucher Program Annual Contributions Contract Funding Exhibit.	2/11/1999	X	.....
336	Transmittal of Notice of Funding Availability (NOFA) for the Welfare-to-Work Section 8 Tenant-Based Assistance Program.	2/9/1999	X	.....
337	Extension Notice for Notice PIH 98–5 (HA), Revised Requirement for submission of Form HUD–52599 to HUD Headquarters.	2/8/1999	X	.....

APPENDIX A—PUBLIC AND INDIAN HOUSING NOTICES—Continued

	Name of document	Date	Arch	Remove
338	Transfer from an Indian housing authority to the tribe or tribally designated housing entity of the United States Housing Act of 1937 program funds that remain in the Line of Credit Control System.	2/4/1999	X	.....
339	Administrative Requirements for Investing Indian Housing Block Grant Funds	2/3/1999	X	.....
340	Budget Line Items for the Consolidated Economic Development and Supportive Services and Tenant Opportunities Program in the Line of Credit Control System/Voice Response System for FY 1997 and FY 1998.	1/27/1999	X	.....
341	Reporting Requirements for the Multifamily Tenant Characteristics System (HUD Form 50058).	1/28/1999	X	.....
342	Correction to Notice PIH 98–65—Renewal of Expiring Contracts in the Section 8 Tenant-Based Program During Federal Fiscal Year 1999.	1/12/1999	X	.....
343	Transfer of Section 8 Certificate Program Funding to the Voucher Program Annual Contributions Contract Funding Exhibit.	12/29/1998	X	.....
344	Renewal of Expiring Contracts in the Section 8 Tenant-Based Program During Federal Fiscal Year 1999.	12/30/1998	X	.....
345	HUD's FY 1999 Appropriations Act Section 8 Tenant-based Assistance Program Statutory Provisions.	12/18/1998	X	.....
346	Dwelling Construction and Equipment (DC&E) Costs for Affordable Housing under the Native American Housing Assistance and Self-Determination Act of 1996 (NAHASDA). • Attachment.	12/18/1998	X	.....
347	Grant Closeout Procedures	12/4/1998	X	.....
348	Byrd Amendment Requirement for Anti-Lobbying Certification	12/3/1998	X	.....
349	Extension—Notice PIH 97–59 (HA), Restrictions on Leasing Additional Units—Budget Guidance.	12/1/1998	X	.....
350	FY 1999 Performance Funding System (PFS) Inflation Factor and Equation	12/1/1998	X	.....
351	Treatment of Income Received from Training Programs—Housing Authority Responsibilities.	11/20/1998	X	.....
352	Extension—Notice PIH 97–57 (HA), Section 8 Certificate and Moderate Rehabilitation Programs—Rent Adjustments.	11/12/1998	X	.....
353	Lead-Based Paint (LBP) Disclosure requirements for Public and Indian Housing and Section 8 Rental Programs.	11/5/1998	X	.....
354	Extension—Notice PIH 97–53 (HA), Inter-agency Agreement with the Army Corps of Engineers to Conduct Public Housing Development/Major Reconstruction of Obsolete Public Housing (MROP) Inspections/Reviews on Behalf of the Department of Housing and Urban Development (HUD). • Attachment.	10/28/1998	X	.....
355	Unavailability of HUDCAPS During December, 1998	10/28/1998	X	.....
356	Extension—Notice PIH 97–51 (HA), Policies and Procedures for Using Modernization Funds for Development Activities and Development Funds for Modernization Activities, and Modernization and Development Funds for Operations.	10/20/1998	X	.....
357	Section 8 Management Assessment Program (SEMAP) Final Rule and Certification Form.	10/6/1998	X	.....
358	Transmittal of the New Demolition/Disposition Application—HUD Form 52860	10/6/1998	X	.....
359	Management and Retention of Section 8 Financial Records	9/28/1998	X	.....
360	Annual Performance Report	9/4/1998	X	.....
361	Implementation of the Grants Management Center (GMC)	9/1/1998	X	.....
362	Additional Review Responsibilities for the Special Application Center (SAC)	8/28/1998	X	.....
363	PROCESSING OF GRANT APPLICATIONS FOR FISCAL YEAR (FY) 1998 SUPERNOFA—Public and Indian Housing Economic Development and Supportive Services Program (EDSS). • Appendices A–1.	7/31/1998	X	.....
364	Processing of Grant Applications for Fiscal Year (FY) 1998 SuperNOFA Public Housing Tenant opportunities Program (TOP). • Attachments 1–13.	7/31/1998	X	.....
365	Ceiling Rents in Public Housing ..... • Attachment.	7/23/1998	X	.....
366	PROCESSING OF GRANT APPLICATIONS FOR FISCAL YEAR (FY) 1998 SUPERNOFA—Drug Elimination in Public and Assisted Housing Programs.	7/14/1998	X	.....
367	Procedures to Avoid Displacement of Section 8 Program Participants Receiving Rental Assistance from Indian Housing Authorities.	7/9/1998	X	.....
368	Section 8 Family Self-Sufficiency (FSS) Program Coordinators—FY 1998 Processing Instructions. • Attachment.	7/7/1998	X	.....
369	Processing Public Housing Agency (PHA) Applications for the Family Unification Program (FUP), NOFA FR–4360, dated June 1, 1998. • Attachment 1–2.	6/26/1998	X	.....
370	Processing Public Housing Agency (PHA) Applications for Section 8 Rental Vouchers and Certificates For Disabled Families Under the Mainstream Program, NOFA FR–4359, Dated April 30, 1998. • Attachment 1–2.	6/22/1998	X	.....

APPENDIX A—PUBLIC AND INDIAN HOUSING NOTICES—Continued

	Name of document	Date	Arch	Remove
371	Processing Public Housing Agency (PHA) Applications for Section 8 Rental Vouchers and Certificates For Non-Elderly Disabled Families In Connection With Certain Section 8 Project-Based Developments and Certain Section 202, Section 221(d)(3), and Section 236 Developments, NOFA FR–4359, Dated April 30,1998. • Attachment 1–2.	6/16/1998	X	.....
372	Changes to Notice PIH 98–20 (HA), Instructions for Obtaining FBI Criminal History Record Information.	6/8/1998	X	.....
373	Clarification to Notice PIH 98–27 (HA), Procedures for Calculating Earned Administrative Fees in the Section 8 Rental Certificate, Rental Voucher, and Moderate Rehabilitation Programs.	6/2/1998	X	.....
374	Responsibility to begin transmission of new Form HUD–50058, Family Report, on June 1, 1998.	9/11/1998	X	.....
375	Dwelling Construction and Equipment (DC&E) Costs for Affordable Housing under the Native American Housing and Self-Determination Act of 1996 (NAHASDA). • Attachment.	5/21/1998	X	.....
376	Implementation of the Special Application Center (SAC)	5/12/1998	X	.....
377	Procedures for Calculating Earned Administrative Fees in the Section 8 Rental Certificate, Rental Voucher, and Moderate Rehabilitation Programs.	4/28/1998	X	.....
378	Reinstatement—Notice PIH 97–13 (HA), Lease-Purchase Agreements in the Section 8 Tenant-Based Rental Voucher and Certificate Programs.	4/24/1998	X	.....
379	Renewal of Expiring Contracts in the Section 8 Rental Certificate and Rental Voucher Programs during Fiscal Year 1998.	4/23/1998	X	.....
380	Reinstatement—Notice PIH 97–12 (HA), Requirements for Designation of Public Housing Projects.	4/20/1998	X	.....
381	Public Housing Development Cost Limits ..... • Attachment A. • Attachment B.	4/13/1998	X	.....
382	Amending Section 8 Annual Contribution Contracts to Add Budget Authority for Additional Authorized Units.	4/10/1998	X	.....
383	Revised Consolidated Annual Contributions Contract for the Section 8 Rental Certificate and Rental Voucher Programs.	4/21/1998	X	.....
384	Instructions For Obtaining FBI Criminal History Record Information	4/7/1998	X	.....
385	Tenant-Based Rental Vouchers or Certificates for Eligible Residents of Preservation Eligible Projects Approved for Prepayment of the Mortgage or Voluntary Termination of the Mortgage Insurance in Federal FY 1998.	4/3/1998	X	.....
386	Correction to Notice PIH 98–13(HA)—Form HUD–50058—Special Instructions for the Section 8 Certificate Over-FMR Tenancy Option (OFTO).	3/19/1998	X	.....
387	Native American Housing Assistance and Self-Determination Act Advance Funding for Tribes or Tribally Designated Housing Entities with an Indian Housing Authority having a Fiscal Year End Date of December 31, 1997, March 31, 1998, and June 30, 1998.	3/12/1998	X	.....
388	Extension—Notice PIH 97–5(HA), Grant Closeout Procedures; Notice PIH 97–9 (HA), Grant Closeout Procedures, Addendum.	2/26/1998	X	.....
389	Single Audit Act Amendments of 1996: Information for Public Housing Agencies and Indian Housing Entities. • Attachment.	2/14/1998	X	.....
390	Form HUD–50058—Special Instructions for the Section 8 Certificate Over-FMR Tenancy Option (OFTO). • Attachment.	2/20/1998	X	.....
391	Renewal of Expiring Contracts in the Section 8 Rental Certificate and Rental Voucher Programs during Fiscal Year 1998.	2/13/1998	X	.....
392	Fiscal Year 1998 Financial Management Requirements for Section 8 Moderate Rehabilitation Program (Mod Rehab) Housing Assistance Payments (HAP) Contract Expirations. • Attachment A. • Attachment B.	2/3/1998	X	.....
393	Extension—Notice PIH 97–3 (HUD), Revised Annual Contributions Contract (ACC) Amendment Forms for Public Housing Development. • Attachment.	2/3/1998	X	.....
394	Extension—Notice PIH 97–8 (HA), Environmental Review: Public Housing and 24 CFR part 58.	2/3/1998	X	.....
395	Extension—Notice PIH 97–7 (HA), Lead-Based Paint Liability Insurance in the Public Housing and Indian Housing Programs.	1/28/1998	X	.....
396	Semi-Annual HUDWEB Data Collection (Reporting) Form Instructions for Public Housing Agencies (PHAs) and Indian Housing Authorities (IHAs) selected for funding under the PIH Economic Development and Supportive Services Program (EDSS) in Fiscal Years 1996. • Attachment, Part 1. • Attachment, Part 2.	1/30/1998	X	.....
397	Clarification of Notice PIH 97–60 (HA), Responsibility for Completion of the Form HUD–50058, Family Report.	1/29/1998	X	.....
398	Revised Requirements for submission of Form HUD–52599 to HUD Headquarters	1/28/1998	X	.....

APPENDIX A—PUBLIC AND INDIAN HOUSING NOTICES—Continued

	Name of document	Date	Arch	Remove
399	Public Housing, Native American and Section 8 Fiscal Year 1998 Appropriations Act and Balanced Budget Act of 1997 Provisions.	1/26/1998	X	.....
400	Recapture of Section 8 Program Reserves	1/16/1998	X	.....
401	Treatment of Income Received from Training Programs	1/12/1998	X	.....
402	Extension—Notice PIH 96–92 (HA), Lead-Based Paint (LBP) Disclosure Rule Requirements for Public and Indian Housing and Section 8 Rental Certificate, Rental Voucher and Moderate Rehabilitation Programs.	1/6/1998	X	.....
403	Extension—Notice PIH 96–88 (HA), HUDCAPS Program Information Requirements	12/23/1997	X	.....
404	FY 1997 and 1998 Subsidies for Operation of Low-Income Housing Projects	12/8/1997	X	.....
405	Responsibility for Completion of the Form HUD–50058, Family Report	12/4/1997	X	.....
406	Restrictions on Leasing Additional Units—Budget Guidance	11/26/1997	X	.....
407	Fiscal Year 1998 Renewal of Expiring Section 8 Moderate Rehabilitation (Mod Rehab) Housing Assistance Payments (HAP) Contracts.	11/21/1997	X	.....
408	Section 8 Certificate and Moderate Rehabilitation Programs—Rent Adjustments	11/19/1997	X	.....
409	Sample Public Housing Lease	11/5/1997	X	.....
410	FY 1998 Performance Funding System (PFS) Inflation Factor and Equation	10/30/1997	X	.....
411	Reinstatement and Extension of Notice PIH 96–39 (HUD)—LOCCS/VRS Procedures for the Urban Revitalization Demonstration—HOPE VI Program.	10/2/1997	X	.....
412	Agreement with the Army Corps of Engineers to Conduct Public Housing Development/Major Reconstruction of Obsolete PH (MROP) Inspections/Reviews on Behalf of the Department of Housing and Urban Development, dated September 22, 1994, Notice PIH 94–67(HA)—Extension.	9/30/1997	X	.....
413	Extension of Notice PIH 96–20 (HA), Reduction of Section 8 Administrative Fee for HA Failure to Electronically Submit Form HUD–50058.	9/29/1997	X	.....
414	Extension—Notice PIH 96–56 (HA), Policies and Procedures for Using Modernization Funds for Development Activities and Development Funds for Modernization Activities, and Modernization and Development Funds for Operations.	9/23/1997	X	.....
415	Expiration of Section 8 Annual Contributions Contracts between the Department of Housing and Urban Development (HUD) and Indian Housing Authorities.	9/19/1997	X	.....
416	Extension—Notice PIH 96–66 (HUD), Procedures and Semi-Annual Reporting Instructions for Field Offices with Monitoring Oversight for Public Housing Agencies (PHAs) Selected for Funding under the FY 94 Family Investment Centers (FICs) Program.	9/17/1997	X	.....
417	Reinstatement and Extension of Notice PIH 95–37 (HA), Inter-agency Agreement with the Army Corps of Engineers to Conduct Modernization Inspections on behalf of the Department of Housing and Urban Development, dated February 4, 1994, and Notice PIH 94–14 (HA) (same subject) dated April 11, 1994.	9/11/1997	X	.....
418	Annual Lead-Based Paint (LBP) Activity Report, Form HUD–52850	9/8/1997	X	.....
419	Replacing Expiring Section 8 Moderate Rehabilitation (Mod Rehab) Housing Assistance Payments (HAP) Contracts in Fiscal Year (FY) 1998.	9/4/1997	X	.....
420	Processing of Grant Applications For Fiscal Year (FY) 1997 Public Housing Drug Elimination Program (PHDEP).	8/4/1997	X	.....
421	Reporting Requirements Cancelled for Form HUD–52355, Housing Authority Costs for Law Enforcement and Security Personnel and Form HUD–52356, Semi-Annual Form for Public Housing Drug Elimination Program (PHDEP) Outcome Monitoring.	7/24/1997	X	.....
422	Responsibility for Completion of Form HUD–51234, Report on Occupancy for Public and Indian Housing.	7/23/1997	X	.....
423	Extension—Notice PIH 96–33 (HA), Required HA Cash Management and Investment Policies and Procedures.	7/21/1997	X	.....
424	General Conditions for Construction Contract, Form HUD–5370 (3/97)	7/18/1997	X	.....
425	Extension—Notice PIH 96–89 (HUD), Line of Credit Control System (LOCCS) Public and Indian Housing Program User Guide for HUD Staff.	7/16/1997	X	.....
426	Form HUD–50058—Special Instructions for Residents of Eligible Preservation Projects Who Receive Preservation Rental Vouchers or Certificates.	7/15/1997	X	.....
427	Extension of Notice PIH 96–50 (HA), Guidelines for Sponsoring or Co-Sponsoring Training Conferences and Workshops.	7/14/1997	X	.....
428	Extension—Notice PIH 96–37 (HA), Maintenance Operations Manual and Supervisory Maintenance Training Materials for Public and Indian Housing.	7/7/1997	X	.....
429	Amendment to Notice 97–18, Modification of Mutual Help Contribution Drawdown Procedures in LOCCS, issued April 21, 1997.	7/7/1997	X	.....
430	Extension of Notice PIH 96–34 (HA), Guidelines for Managing Public Housing Youth Apprenticeship (YAP) Grants through the Line of Credit Control System and Voice Response System (LOCCS/VRS) Payment Voucher System.	6/27/1997	X	.....
431	Department of Labor Davis-Bacon Database	6/27/1997	X	.....
432	Questions and Answers concerning Social Security (SS) and Supplemental Security Income (SSI) Verification.	6/24/1997	X	.....
433	Optional Earned Income Exclusion/Deduction Incentive and Corrected Sample Format for Performance Funding System. • Appendices.	6/25/1997	X	.....
434	Public and Indian Housing (PIH) Compliance Supplement—Interim Guidance for Annual Audits of Public Housing Agencies and Indian Housing Authorities by Independent Auditors; and Attachment I, Example A.	6/19/1997	X	.....

APPENDIX A—PUBLIC AND INDIAN HOUSING NOTICES—Continued

	Name of document	Date	Arch	Remove
435	Tenant-Based Rental Vouchers or Certificates for Eligible Residents of Preservation Eligible Projects Approved for Prepayment of the Mortgage or Voluntary Termination of the Mortgage Insurance in Federal FY 1997.	6/11/1997	X	.....
436	Processing Housing Agency Applications for Section 8 Rental Vouchers and Certificates For Disabled Families Under the Mainstream Program, NOFA FR–4224, Dated April 10, 1997.	5/28/1997	X	.....
437	Extension of Notice PIH 96–27 (HA), Occupancy Provisions of the Housing Opportunity Program Extension Act of 1996.	5/20/1997	X	.....
438	Extension of Notice PIH 96–18 (HA), Travel Policy for Resident Management/Tenant Opportunities Program Grantees (RM/TOP).	5/20/1997	X	.....
439	Extension of Notice PIH 96–26(HUD), Policies and Procedures on Maximum Allowable Total Development Cost (TDC) for the HUD-assisted Indian Housing Program.	5/15/1997	X	.....
440	Processing Housing Agency Applications for the Family Unification Program—April 18, 1997 NOFA.	5/8/1997	X	.....
441	Processing Housing Agency Applications for Section 8 Rental Vouchers and Certificates For Non-Elderly Disabled Families In Connection With Certain Section 8 Project-Based Developments, NOFA FR–4207, Dated April 10, 1997, and Correction Dated April 17, 1997.	5/7/1997	X	.....
442	Section 8 Family Self-Sufficiency Program Coordinators FY 1997 NOFA Processing Instructions.	5/7/1997	X	.....
443	Comprehensive Improvement Assistance Program (CIAP): Federal Fiscal Year (FFY) 1997 Application Submission, Processing and Fund Reservation.	5/6/1997	X	.....
444	Extension of Notice PIH 96–20 (HA), Reduction of Section 8 Administrative Fee for HA Failure to Electronically Submit Form HUD–50058.	4/29/1997	X	.....
445	Clarification of PIH Notice 96–95 Governing FY 97 Renewal of Expiring Section 8 Moderate Rehabilitation Housing Assistance Payments (HAP) Contracts.	4/22/1997	X	.....
446	Modification of Mutual Help Contribution Drawdown Procedures in LOCCS	4/21/1997	X	.....
447	Application of the Simplified Delta Calculation to non-Performance Funding System (PFS) Rental Housing Authorities (HAs).	4/21/1997	X	.....
448	Energy Standards and State Energy Codes	4/17/1997	X	.....
449	Financial Management Program Requirements for the Moderate Rehabilitation Program	4/10/1997	X	.....
450	Correction to Notice PIH 97–11, Procedures for Calculating Earned Administrative Fees in the Section 8 Rental Certificate, Rental Voucher, and Moderate Rehabilitation Programs.	3/27/1997	X	.....
451	Lease-Purchase Agreements in the Section 8 Tenant-Based Rental Voucher and Certificate Programs.	3/18/1997	X	.....
452	Requirements for Designation of Public Housing Projects	3/12/1997	X	.....
453	Procedures for Calculating Earned Administrative Fees in the Section 8 Rental Certificate, Rental Voucher, and Moderate Rehabilitation Programs.	3/11/1997	X	.....
454	Public Housing Development Cost Limits	3/4/1997	X	.....
455	Grant Closeout Procedures Notice PIH 97–5—Addendum	2/9/1997	X	.....
456	Environmental Review: Public Housing and 24 CFR part 58—(Appendices)	1/31/1997	X	.....
457	Lead-Based Paint Liability Insurance in the Public Housing and Indian Housing Programs.	1/28/1997	X	.....
458	Extension of Notice PIH 95–68 (IHA), Calculating Ceiling Rents in the Indian Housing Rental Program; Use of Actual Debt Service.	1/22/1997	X	.....
459	Grant Closeout Procedures	1/21/1997	X	.....
460	Public Housing Management Assessment Program (PHMAP)	1/21/1997	X	.....
461	Revised Annual Contributions Contract (ACC) Amendment Forms for Public Housing Development.	1/17/1997	X	.....
462	Extension of Notice PIH 95–65 (IHA), Streamlined Operating Budget Procedures for the Indian Housing Program.	1/15/1997	X	.....
463	Processing Section 8 Renewal Funding Increments in Fiscal Year 1997	1/15/1997	X	.....
464	Fiscal Year 1997 Renewal of Expiring Section 8 Moderate Rehabilitation (Mod Rehab) Housing Assistance Payments (HAP) Contracts.	12/26/1996	X	.....
465	Supplementing Public Housing Agency/Department of Housing and Urban Development (PHA/HUD) Review and Managerial Resources—Use of Outside Firms.	12/20/1996	X	.....
466	Combined Income and Rent Final Rule	12/18/1996	X	.....
467	Lead-Based Paint (LBP) Disclosure Rule Requirements for Public and Indian Housing and Section 8 Rental Certificate, Rental Voucher and Moderate Rehabilitation Programs.	12/11/1996	X	.....
468	Closeout of Indian Housing Development Projects	12/10/1996	X	.....
469	Line of Credit Control System/Voice Response System (LOCCS/VRS) for Modernization Program Areas.	12/5/1996	X	.....
470	Line of Credit Control System (LOCCS) Public and Indian Housing Program User Guide for HUD Staff.	11/25/1996	X	.....
471	HUDCAPS Program Information Requirements	11/22/1996	X	.....
472	FY 1997 Performance Funding System (PFS) Inflation Factor and Equation and PFS Incentives Rule.	11/20/1996	X	.....
473	FY 1997 Subsidies for Operation of Low-Income Housing Projects	11/15/1996	X	.....
474	Rental Vouchers for the Relocation of Witnesses Cooperating With Law Enforcement Agencies in Efforts to Combat Crime in Public, Indian, and Assisted Housing.	10/11/1996	X	.....

APPENDIX A—PUBLIC AND INDIAN HOUSING NOTICES—Continued

	Name of document	Date	Arch	Remove
475	New software for review of Comprehensive Grant Program Formula Characteristics Report.	10/11/1996	X	.....
476	Public Housing, Indian Housing and Section 8 Fiscal Year 1997 Appropriations Act Provisions, and Extensions of Certain Fiscal Year 1996 Appropriation Act Notices.	9/30/1996	X	.....
477	Applicability of Section 214 to Citizens of the Freely Associated States	9/30/1996	X	.....
478	Departments of Health and Human Services, Interior and HUD Interdepartmental Agreement on the Indian Housing Program.	9/30/1996	X	.....
479	Extension of Notice PIH 95–55(HA), Public Housing Architectural and Engineering (A/E)-Design Professional (DP) Contracts.	9/24/1996	X	.....
480	Extension of Notice PIH 95–61(HA), Line of Credit Control System/Voice Responses System (LOCCS/VRS) for Modernization Program Area.	9/20/1996	X	.....
481	Extension of Notice PIH 95–54 (HUD), Revised Annual Contributions Contract (ACC) Amendment Forms for Modernization.	9/20/1996	X	.....
482	Procedures for Obtaining Audit Services for Public Housing Agencies and Indian Housing Authorities (HAs) Not In Compliance With Audit Requirements.	9/19/1996	X	.....
483	Extension of Notice PIH 95–53 (HA), Financial Management System for the Section 8 Certificate and Voucher Programs.	9/16/1996	X	.....
484	Extension of Notice PIH 95–62 (HA), Elimination of the Maximum Allowable Operating Reserve for the Section 23 and Section 10(c) Program.	9/16/1996	X	.....
485	Optional Earned Income Exclusions in the Public Housing and Indian Housing programs	9/9/1996	X	.....
486	Extension of Notice PIH 95–52 (IHA), Calculating Annual Income: Calculation of Treatment of Income Derived from Trust or Restricted Lands of Individual Native Americans and Treatment of Certain Payments Made Pursuant to the Alaska Native Claims Settlement Act.	8/30/1996	X	.....
487	Program Coordinators for the Section 8 Family Self-Sufficiency (FSS) Program—Application Processing Instructions for July 26, 1996 NOFA.	8/26/1996	X	.....
488	Restrictions on Leasing Additional Units; Budget Guidance	8/23/1996	X	.....
489	Contracting and Monitoring in the Public Housing Tenant Opportunities Programs (TOP)	8/19/1996	X	.....
490	Procedures and Semi-Annual Reporting Instructions for Field Offices with Monitoring Oversight for Public Housing Agencies (PHAs) Selected for Funding Under the Fiscal Year 1994 Family Investment Centers (FIC) Program.	8/16/1996	X	.....
491	Rental Certificates and Vouchers—Departmental Policy on Sanctions for Delinquent Payments under the Portability Billing Procedures.	8/15/1996	X	.....
492	Final Rule—Part 953—Community Development Block Grants for Indian Tribes and Alaska Native Villages.	8/14/1996	X	.....
493	Determining Section 8 Rents For Units in HOME-assisted Projects	8/9/1996	X	.....
494	Extension of Notice PIH 95–49 (HA), Public and Indian Housing Guide Specifications	8/6/1996	X	.....
495	Tenant-Based Rental Vouchers or Certificates for Unassisted Low Income Residents of Preservation Eligible Projects Approved for Prepayment of the Mortgage or Voluntary Termination of the Mortgage Insurance.	8/6/1996	X	.....
496	New Requirements for Designation of Public Housing Projects	8/5/1996	X	.....
497	Extension of Notice PIH 95–50 (HA), Youth Apprenticeship Program (YAP), Form HUD–52360, Data Collection Requirements.	8/1/1996	X	.....
498	Extension of Notice PIH 95–48 (HA), Americans with Disabilities Act	7/31/1996	X	.....
499	Guidelines and Procedures for Approving Housing Agency (HA) Request for Higher Administrative Fees.	7/31/1996	X	.....
500	Policies and Procedures for Using Modernization Funds for Development Activities and Development Funds for Modernization Activities, and Modernization and Development Funds for Operations.	7/29/1996	X	.....
501	Reinstatement of Notice PIH 94–79 (HA), HUD Policy under which Public and Indian Housing Authorities may Contract with Health Care, Education and Social Service Organizations.	7/26/1996	X	.....
502	Accounting and Financial Management Procedures for the Portability provisions of the Section 8 Certificate and Voucher programs.	7/26/1996	X	.....
503	Public and Indian Housing (PIH) Compliance Supplement for Annual Audits of Public Housing Agencies and Indian Housing Authorities by Independent Auditors, Attachment I, Example A: ''Independent Auditor's Report on Compliance with Specific Requirements Applicable to Major HUD Programs''.	7/26/1996	X	.....
504	Public Housing Management Assessment Program (PHMAP)—Indicator #8, Security: ''One Strike and You're Out''.	7/25/1996	X	.....
505	Amendment And Reopening Of Application Period And Processing Of Grant Applications For Fiscal Year (FY) 1996 Public Housing Drug Elimination Program (PHDEP).	7/22/1996	X	.....
506	Guidelines For Sponsoring Or Co-Sponsoring Training Conferences And Workshops	7/12/1996	X	.....
507	Correction to Form HUD–52728, HA Calculation of Occupancy Percentage for a Requested Budget Year.	7/10/1996	X	.....
508	Tenant Opportunities Program (TOP) Semi-Annual Report Form (HUD–52370)	7/2/1996	X	.....
509	Extension of Notice PIH 95–39 (HUD), Elimination of Selections from the Waiting List by Unit Size in the Section 8 Rental Certificate and Voucher Programs and Elimination of the Specification of the Number of Units and Unit Sizes in the Certificate Annual Contributions Contract.	6/27/1996	X	.....
510	Extension of Notice PIH 95–41 (HUD), Treatment of Indian Trust Funds in Calculating Annual Income.	6/27/1996	X	.....

APPENDIX A—PUBLIC AND INDIAN HOUSING NOTICES—Continued

	Name of document	Date	Arch	Remove
511	Changes to Notice PIH 95–42 (HA), dated June 21, 1995; Public and Indian Housing Homeownership Programs—Loan Forgiveness, Establishment of Replacement Reserves and Use of Excess Residual Receipts, Operating Reserves and Proceeds from the Sale of Homeownership Units.	6/27/1996	X	.....
512	Extension of Notice PIH 95–35 (HA), Elimination of Employee Benefit Plan Requirements, Handbook 740l.7, Part II, Dated September 1988.	6/25/1996	X	.....
513	Obligation of Section 8 Funds and Related Matters	6/21/1996	X	.....
514	Waiver of the Minimum Rent Requirement	6/20/1996	X	.....
515	Form HUD–50058—Instructions for Reporting Certain Information—January 26, 1996, Continuing Resolution Statutory Changes.	6/19/1996	X	.....
516	Annual Adjustments for the Section 8 Certificate and Moderate Rehabilitation Programs	6/19/1996	X	.....
517	Reinstatement and Extension of Notice PIH 94–35 (HUD), LOCCS–VRS Procedures for the Urban Revitalization Demonstration—HOPE VI Program.	6/13/1996	X	.....
518	Processing Housing Agency Applications for the Family Unification Program—May 2, 1996 NOFA.	6/6/1996	X	.....
519	Maintenance Operations Manual and Supervisory Maintenance Training Materials for Public and Indian Housing.	6/6/1996	X	.....
520	Department of Justice Programs that promote crime prevention strategies and enhance the capacity of law enforcement agencies and communities to reduce crime.	6/5/1996	X	.....
521	Final Rule—Low Income Public and Indian Housing; Vacancy Rule	6/4/1996	X	.....
522	Extension of Notice PIH 95–29 (HA), Guidelines for Managing Public Housing Youth Apprenticeship (YAP) Grants through the Line of Credit Control System and Voice Response System (LOCCS/VRS) Payment Voucher System.	C	X	.....
523	Public and Indian Housing (PIH) Compliance Supplement for Annual Audits of Public Housing Agencies and Indian Housing Authorities by Independent Auditors.	5/29/1996	X	.....
524	Processing Of Grant Applications For Fiscal Year (FY) 1996 Public Housing Drug Elimination Program.	5/22/1996	X	.....
525	FY 1996 Subsidies for Operation of Low-Income Housing Projects	5/20/1996	X	.....
526	Implementing Performance Standards required by the Tenant Opportunities Program (TOP).	5/16/1996	X	.....
527	Reissuance and Extension of Notice PIH 94–83 (HA), New Semi-Annual Form for Public Housing Drug Elimination Program (PHDEP) Outcome Monitoring, HUD–52356.	5/16/1996	X	.....
528	Occupancy Provisions of the Housing Opportunity Program Extension Act of 1996	5/13/1996	X	.....
529	Policies and Procedures on Maximum Allowable Total Development Cost (TDC) for the HUD-assisted Indian Housing Program.	5/15/1996	X	.....
530	Indian Housing Homeownership Programs—Loan Forgiveness Procedures, Establishment of Replacement Reserves and Use of Excess Residual Receipts, Operating Reserves and Proceeds from the Sale of Homeownership Units for Grant or Loan Funded Projects.	5/7/1996	X	.....
531	Performance Funding System Policy Revision to Encourage Public and Indian Housing Authorities to Facilitate Resident Employment and Undertake Entrepreneurial Initiatives.	4/3/1996	X	.....
532	Omnibus Consolidated Rescissions and Appropriations Act of 1996 Statutory Changes Affecting the Administration of the Section 8 Certificate, Voucher, and Moderate Rehabilitation Programs.	5/1/1996	X	.....
533	Procedures for Calculating Earned Administrative Fees in the Section 8 Rental Certificate and Rental Voucher Programs.	4/22/1996	X	.....
534	Update—Accounting Procedures for Special Administrative Fees for the Section 8 Rental Certificate and Rental Voucher Programs.	4/19/1996	X	.....
535	Reduction of Section 8 Administrative Fee for HA Failure to Electronically Submit Form HUD–50058 and Form HUD–50058–FSS for Section 8 Participants.	4/20/1996	X	.....
536	Additional Budget Line Item for the Tenant Opportunities Program (TOP) in the Line of Credit Control System (LOCCS)/Voice Response System (VRS).	4/18/1996	X	.....
537	Travel Policy For Resident Management/Tenant Opportunities Program Grantees (RM/TOP).	4/18/1996	X	.....
538	Comprehensive Improvement Assistance Program (CIAP); Federal Fiscal Year (FFY) 1996 Application Submission, Processing and Fund Reservation.	4/18/1996	X	.....
539	"One Strike and You're Out" Screening and Eviction Guidelines for Public Housing Authorities (HAs).	4/12/1996	X	.....
540	Public Housing Development Cost Limits	4/3/1996	X	.....
541	Immigration and Naturalization Service Forms	3/26/1996	X	.....
542	Managing the Minimum Requirements	3/21/1996	X	.....
543	Extension of Notice PIH 95–9 (HA), Processing of Applications for Designated Housing for Disabled Families Public Housing Development and Major Reconstruction of Obsolete Public Housing (MROP) Activities.	3/20/1996	X	.....
544	Extension of Notice PIH 95–10 (HUD), HOPE VI—Urban Revitalization Demonstration (HOPE VI) Program Notice.	3/15/1996	X	.....
545	Extension of Notice PIH 94–64 (HA), Revised Submission Requirements for Requisition for Partial Payment of Annual Contributions, Form HUD–52663.	3/6/1996	X	.....
546	Extension of Notice PIH 95–34 (HA), Annual Adjustment Factor (AAF) Rent Increase Requirements Pursuant to the Fiscal Year 1995 Appropriations Act.	3/6/1996	X	.....

APPENDIX A—PUBLIC AND INDIAN HOUSING NOTICES—Continued

	Name of document	Date	Arch	Remove
547	January 26, 1996 Continuing Resolution Statutory Changes Affecting the Administration of the Section 8 Certificate, Voucher, and Moderate Rehabilitation Programs.	2/13/1996	X	.....
548	Administrative Provisions of the January 26, 1996 Continuing Resolution Affecting Public and Indian Housing Programs.	2/13/1996	X	.....
549	Clarification of policies, procedures and standards in the Public and Indian Housing Amendment to the Tenant Participation and Tenant Opportunities in Public and Indian Housing Final Rule 24 CFR part 950, et al.	2/13/1996	X	.....
550	Processing Section 8 Renewal Funding Increments in Fiscal Year 1996 and Related Financial Management Issues.	2/8/1996	X	.....
551	Discontinuance of ''Paper'' Reporting	2/1/1996	X	.....
552	Reinstatement and Extension of Notice H 94–88, Submission of Environmental Site Assessment Transaction Screen Process and Phase I Environmental Site Assessment Process.	1/29/1996	X	.....
553	Reissuance of Notice PIH 94–25 (IHA), Native American Preference in Admissions to Assisted Housing Programs.	1/22/1996	X	.....
554	Public Housing Energy Saving Opportunities	12/13/1995	X	.....
555	Procedures for Replacing Expiring Section 8 Moderate Rehabilitation Housing Assistance Payments (HAP) Contracts.	12/4/1995	X	.....
556	Extension of Notice PIH 94–67 (HA), Inter-agency Agreement with the Army Corps of Engineers to Conduct Public Housing Development/Major Reconstruction of Obsolete Public Housing (MROP) Inspections/Reviews on Behalf of the Department of Housing and Urban Development, dated September 22, 1994.	11/13/1995	X	.....
557	Calculating Ceiling Rents in the Indian Housing Rental Program; Use of Actual Debt Service.	11/13/1995	X	.....
558	Extension of Notice PIH 94–66 (PHA), Low Rent Public Housing Program—Streamlined Operating Budget and Financial Reporting Procedures.	11/2/1995	X	.....
559	Extension of Notice PIH 94–72 (IHA), Streamlined Operating Budget Procedures for the Indian Housing Program.	10/18/1995	X	.....
560	Extension of Notice PIH 95–34 (HA), Annual Adjustment Factor (AAF) Rent Increase Requirements Pursuant to the Fiscal Year 1995 Appropriations Act.	10/16/1995	X	.....
561	Final Conforming Rule for the Section 8 Certificate and Voucher Programs	10/11/1995	X	.....
562	Elimination of the Maximum Allowable Operating Reserve for the Section 23 and Section 10(c) Programs.	9/29/1995	X	.....
563	Extension of Notice PIH 94–63 (HA), Line of Credit Control System/Voice Response System (LOCCS/VRS) for Modernization Program Area.	9/28/1995	X	.....
564	Steps Public Housing Agencies and Indian Housing Authorities should take when identified as Potentially Responsible Parties by EPA.	9/28/1995	X	.....
565	Notice PIH 95–27 (HA), Required HA Cash Management and Investment Policies and Procedures—Change.	9/25/1995	X	.....
566	FY 1996 Performance Funding System (PFS) Inflation Factor and Equation	9/20/1995	X	.....
567	Public Housing Architectural and Engineering (A/E)-Design Professional (DP) Contracts	9/15/1995	X	.....
568	Revised Annual Contributions Contract (ACC) Amendment Forms for Modernization	9/13/1995	X	.....
569	Financial Management System for the Section 8 Certificate and Voucher Programs	9/6/1995	X	.....
570	Calculating Annual Income: Clarification of Treatment of Income Derived From Trust or Restricted Lands of Individual Native Americans and Treatment of Certain Payments Made Pursuant to the Alaska Native Claims Settlement Act.	8/29/1995	X	.....
571	Public Housing Architectural and Engineering (A/E)-Design Professional (DP) Contracts	8/18/1995	X	.....
572	Youth Apprenticeship Program (YAP), Form HUD—52360, Data Collection Requirements.	7/21/1995	X	.....
573	Public and Indian Housing Guide Specifications	7/20/1995	X	.....
574	Americans with Disabilities Act	7/17/1995	X	.....
575	Extension of Notice PIH 93–40 (PHA/IHA), Air Conditioning in Public and Indian Housing	7/6/1995	X	.....
576	Extension of Notice PIH 94–34 (HUD), Policies and Procedures on Maximum Allowable Total Development Cost (TDC) for the HUD-assisted Indian Housing Program.	6/28/1995	X	.....
577	Public Housing Development Cost Limits	6/27/1995	X	.....
578	Extension of Notice PIH 92–48 (PHA), Exclusion of Income Received under Training Programs.	6/26/1995	X	.....
579	Changes to Notice PIH 94–44 (HA), dated July 13, 1994; Public and Indian Housing Homeownership Programs—Loan Forgiveness, Establishment of Replacement Reserves and Use of Excess Residual Receipts, Operating Reserves and Proceeds from the Sale of Homeownership Units.	6/21/1995	X	.....
580	Extension of Notice PIH 92–6 (HUD), Treatment of Indian Trust Funds in Calculating Annual Income.	6/20/1995	X	.....
581	Extension of Notice PIH 94–2(HA), Sample Maintenance Policies and Procedures for Public Housing Agencies and Indian Housing Authorities.	6/19/1995	X	.....
582	Elimination of Selections from the Waiting List by Unit Size in the Section 8 Rental Certificate and Voucher Programs and Elimination of the Specification of the Number of Units and Unit Sizes in the Certificate Annual Contributions Contract.	6/15/1995	X	.....
583	Electronic Transmission of Required Family Data	6/12/1995	X	.....

APPENDIX A—PUBLIC AND INDIAN HOUSING NOTICES—Continued

	Name of document	Date	Arch	Remove
584	Extension of Notice PIH 94–5 (HA), Inter-agency Agreement with the Army Corps of Engineers to Conduct Modernization Inspections on behalf of the Department of Housing and Urban Development, dated February 5, 1994, and Notice PIH 94–14 (HA) (same subject) dated April 11, 1994.	6/9/1995	X	.....
585	Public and Indian Housing Directives Printed and Distributed During the Months of January, February, March, and April 1995.	6/9/1995	X	.....
586	Elimination of Employee Benefit Plan Requirements, Handbook 7401.7, Part II, Dated September 1988.	6/8/1995	X	.....
587	Form HUD–52540, Project Accounting Data (PAD): For Use in Public and Indian Housing Development and Modernization Programs.	6/12/1995	X	.....
588	Program Coordinators for the Section 8 Family Self-Sufficiency (FSS) Program—Application Processing Instructions for March 3, 1995 NOFA.	5/31/1995	X	.....
589	Public and Indian Housing (PIH) Compliance Supplement—Interim Guidance for Annual Audits of Public Housing Agencies and Indian Housing Authorities by Independent Auditors.	5/25/1995	X	.....
590	Operating Budget Forms	5/19/1995	X	.....
591	Guidelines for managing Public Housing Youth Apprenticeship (YAP) Grants through the Line of Credit Control System and Voice Response System (LOCCS/VRS) Payment Voucher System.	5/16/1995	X	.....
592	Final Regulation with New Requirements for Demolition and Disposition of Property of Public Housing Agencies.	5/12/1995	X	.....
593	Required HA Cash Management and Investment Policies and Procedures	5/11/1995	X	.....
594	Incentives for Public Housing Agencies and Indian Housing Authorities to Reduce The Cost of Utilities.	4/28/1995	X	.....
595	Supervisory Maintenance Training Materials for Public and Indian Housing	4/20/1995	X	.....
596	24 CFR parts 905 and 950: Indian Housing Program; Amendments; Final Rule	4/19/1995	X	.....
597	Addition of Nine Exclusions to the Definition of Annual Income	4/14/1995	X	.....
598	Processing of Applications for the FY 1995 Family Investment Centers (FIC Program)	4/14/1995	X	.....
599	Full Service Contracting in the Public and Indian Housing Tenant Opportunities Program	4/7/1995	X	.....
600	HOPE VI—Urban Revitalization Demonstration (HOPE VI) Program Notice	2/22/1995	X	.....
601	Processing of Applications for Designated Housing for Disabled Families—Public Housing Development and Major Reconstruction of Obsolete Public Housing (MROP) Activities.	2/16/1995	X	.....
602	FEDERAL REGISTER Notices Announcing Redelegation of Authority for Public and Indian Housing (PIH) Programs.	12/14/1994	X	.....
603	Streamlined Operating Budget Procedures for the Indian Housing Program	10/4/1994	X	.....
604	Inter-agency Agreement with the Army Corps of Engineers to conduct Public Housing Development/Major Reconstruction of Obsolete Public Housing (MROP) inspections/reviews on behalf of the Department of Housing and Urban Development (HUD).	9/22/1994	X	.....
605	Low Rent Public Housing Program—Streamlined Operating Budget and Financial Reporting Procedures.	9/21/1994	X	.....
606	Revised Submission Requirements for Requisition for Partial Payment of Annual Contributions, Form HUD–52663.	9/16/1994	X	.....
607	Line of Credit Control System/Voice Response System (LOCCS/VRS) for Modernization Program Areas.	9/14/1994	X	.....
608	Changes to Notice PIH 93–31 (PHA), dated June 29, 1993: Public and Indian Housing Homeownership Programs—Loan Forgiveness, Establishment of Replacement Reserves and Use of Excess Residual Receipts, Operating Reserves and Proceeds from the Sale of Homeownership Units.	7/13/1994	X	.....
609	Policies and Procedures on Maximum Allowable Total Development Cost (TDC) for the HUD-assisted Indian Housing Program.	6/10/1994	X	.....
610	Native American Preference in Admissions to Assisted Housing Programs	5/24/1994	X	.....
611	Inter-agency Agreement with the Army Corps of Engineers to Conduct Modernization Inspections on behalf of the Department of Housing and Urban Development (HUD)—Correction.	4/11/1994	X	.....
612	Inter-agency Agreement with the Army Corps of Engineers to Conduct Modernization Inspections on behalf of the Department of Housing and Urban Development (HUD).	2/5/1994	X	.....
613	Sample Maintenance Policies and Procedures for Public Housing Agencies and Indian Housing Authorities.	1/10/1994	X	.....
614	Implementation of the Federal Fiscal Year (FFY) 2018 Funding Provisions for the Housing Choice Voucher Program.	5/21/2018	X	.....
615	Funding Availability for Set-Aside Tenant-Protection Vouchers—Fiscal Year 2017 Funding.	2/8/2018	X	.....
616	Guidance Related to (1) Eligibility for Potential Shortfall Funding Under the Calendar Year (CY) 2017 Housing Assistance Payments (HAP) Renewal Set—Aside for the Housing Choice Voucher (HCV) Program and (2) CY 2017 Administrative Fees.	4/26/2017	X	.....
617	Implementation of the Federal Fiscal Year (FFY) 2017 Funding Provisions for the Housing Choice Voucher Program.	6/28/2017	X	.....
618	Requirements for PHAs removing all public housing units and guidance on either the termination of the ACC or the continuation of the public housing program.	12/7/2016	X	.....
619	Amendment—Public Housing Operating Subsidy Eligibility Calculations for Calendar Year 2015.	10/4/2016	X	.....

APPENDIX A—PUBLIC AND INDIAN HOUSING NOTICES—Continued

	Name of document	Date	Arch	Remove
620	Funding Availability for Tenant-Protection Vouchers for Certain at Risk Households in Low-Vacancy Areas—FY16.	8/18/2016	X	.....
621	Public Housing Operating Subsidy Eligibility Calculations for Calendar Year 2016	6/9/2016	X	.....
622	Implementation of the Federal Fiscal Year (FFY) 2016 Funding Provisions for the Housing Choice Voucher Program.	3/10/2016	X	.....
623	Emergency Safety and Security Grants Annual Funding Notification and Application Process.	3/9/2016	X	.....
624	Process for Public Housing Agency Voluntary Transfers and Consolidations of Housing Choice Vouchers, Five-Year Mainstream Vouchers, Project-Based Vouchers and Project-Based Certificates. • Attachment 1—Checklist HCV Transfer or Consolidations. • Attachment 2—Additional Questions—Details for HCV Transfers.	12/16/2015	X	.....
625	Public Housing Operating Subsidy Eligibility Calculations for Calendar Year 2016	11/13/2015	X	.....
626	Guidance on Reporting Public Housing Agency Executive Compensation Information ..... • Attachment.	9/11/2015	X	.....
627	Changes to Flat Rent Requirements—FY 2015 Appropriations Act	9/8/2015	X	.....
628	Administering the Community Service and Self-Sufficiency Requirement (CSSR)	8/13/2015	X	.....
629	Project-Basing HUD-Veterans Affairs Supportive Housing (VASH) Vouchers	6/12/2015	X	.....
630	Funding Availability for Tenant-Protection Vouchers for Certain At-Risk Households in Low-Vacancy Areas—Fiscal Year 2015.	4/23/2015	X	.....
631	Project-Based Voucher (PBV) Guidance	4/1/2015	X	.....
632	Expiration of Temporary Compliance Assistance for Public Housing and Housing Choice Voucher Programs—Temporary Compliance Assistance.	3/12/2015	X	.....
633	Implementation of the Federal Fiscal Year (FFY) 2015 Funding Provisions for the Housing Choice Voucher Program.	2/27/2015	X	.....
634	Extension: Administrative Guidance for Effective and Mandated Use of the Enterprise Income Verification (EIV) System.	1/9/2015	X	.....
635	Public Housing Operating Subsidy Eligibility Calculations for Calendar Year 2015	8/19/2014	X	.....
636	Relocation Requirements under the Rental Assistance Demonstration (RAD) ..... Program, Public Housing in the First Component.	7/14/2014	X	.....
637	Voluntary conversion assessment for Public Housing Agencies (PHAs) with fewer than 250 public housing units.	6/18/2014	X	.....
638	Funding for Tenant-Protection Vouchers for Certain At-Risk Households in Low-Vacancy Areas—2014 Appropriations Act.	5/20/2014	X	.....
639	Changes to Flat Rent Requirements—2014 Appropriations Act	5/19/2014	X	.....
640	Revision to PIH 2013–16—Public Housing Operating SubsidyEligibility Calculations for Calendar Year 2014.	6/25/2013	X	.....
641	Implementation of the Federal Fiscal Year 2014 Funding Provisions for the Housing Choice Voucher Program.	3/18/2014	X	.....
642	Funding for Tenant-Protection Vouchers for Certain At-Risk Households in Low-Vacancy Areas—Revision.	2/4/2014	X	.....
643	Set-Aside Funding Availability for Project-Basing HUD–VASH Vouchers	2/4/2014	X	.....
644	Guidance on Reporting Public Housing Agency Executive Compensation Information ..... • Attachment—HUD–52725 Form.	1/9/2014	X	.....
645	Extension: Administrative Guidance for Effective and Mandated Use of the Enterprise Income Verification (EIV) System.	11/5/2013	X	.....
646	Notice of Annual Factors for Determining Public Housing Agency Administrative Fees for the Section 8 Housing Choice Voucher and Moderate Rehabilitation Programs.	9/27/2013	X	.....
647	Revised Eligibility Requirements for Housing Choice Voucher (HCV) Contract Renewal Set-Aside Funding for Category 1, Shortfall Funds—Notice PIH 2013–12—Implementation of the Federal Fiscal Year 2013 Funding Provisions for the Housing Choice Voucher Program.	9/19/2013	X	.....
648	Extension: Administrative Guidance for Effective and Mandated Use of the Enterprise Income Verification (EIV) System.	8/30/2013	X	.....
649	Processing requests for regulatory waivers through appropriate field offices	8/8/2013	X	.....
650	Public Housing Operating Subsidy Eligibility Calculations for Calendar Year 2014	6/25/2013	X	.....
651	Disaster Housing Assistance Program—Sandy (DHAP—Sandy) Operating Requirements	6/10/2013	X	.....
652	Extension: Public Housing and Housing Choice Voucher Programs—Temporary Compliance Assistance.	6/1/2013	X	.....
653	Implementation of the Federal Fiscal Year 2013 Funding Provisions for the Housing Choice Voucher Program.	5/23/2013	X	.....
654	Funding for Tenant-Protection Vouchers for Certain At-Risk Households in Low-Vacancy Areas—Final Implementation.	4/12/2013	X	.....
655	Public Housing and Housing Choice Voucher Programs—Temporary Compliance Assistance. • FAQ—3/1/2013.	1/22/2013	X	.....
656	Section 184 Indian Housing Loan Guarantee Program's Maximum Loan Limits Effective January 1, 2013.	1/9/2013	X	.....
657	Providing Interim Funding in Fiscal Year 2013 to Recipients of Indian Housing Block Grants.	12/22/2012	X	.....
658	Draft Notice Extending Use of Op Reserves for Cap Improvements	10/25/2012	X	.....
659	Housing Choice Voucher Family Moves with Continued Assistance	10/25/2012	X	.....

APPENDIX A—PUBLIC AND INDIAN HOUSING NOTICES—Continued

	Name of document	Date	Arch	Remove
660	Funding for Tenant-Protection Vouchers for Certain At-Risk Households in Low-Vacancy Areas—Request for Comments.	9/10/2012	X	.....
661	Emergency Safety and Security Funding as it Relates to the Full-Year Continuing Appropriations Act, 2012 [Pub. L. 112–36].	9/7/2012	X	.....
662	SUPPLEMENTAL NOTICE to PIH Notice 2012–16 Request for Applications under the Moving to Work Demonstration Program for Fiscal Year 2011.	8/27/2012	X	.....
663	Federal Fiscal Year 2012 Funding Provisions for the Housing Choice Voucher Program—Award of Remaining Set-Aside Funds.	8/21/2012	X	.....
664	Public Housing Operating Subsidy Eligibility Calculations for Calendar Year 2013	6/22/2012	X	.....
665	Calendar Year 2012 $20 Million Set-Aside for Financial Hardship due to Public Housing Operating Subsidy Allocation Adjustment. • Attachment A. • Attachment B1. • Attachment B2.	6/8/2012	X	.....
666	Extension: Administrative Guidance for Effective and Mandated Use of the Enterprise Income Verification (EIV) System.	6/1/2012	X	.....
667	Non-smoking Policies in Public Housing	5/29/2012	X	.....
668	Revocation of Notice PIH 2012–19 (Implementation of Funding for Tenant-Protection Vouchers for Certain At-Risk Households in Low-Vacancy Areas).	5/2/2012	X	.....
669	Implementation of Funding for Tenant-Protection Vouchers for Certain At-Risk Households in Low-Vacancy Areas.	3/16/2012	X	.....
670	Rental Assistance Demonstration—Partial Implementation and Request for Comments ...	3/8/2012	X	.....
671	Request for Applications under the Moving to Work Demonstration Program for Fiscal Year 2011.	2/27/2012	X	.....
672	Guidance on Public Housing salary restrictions in HUD's Federal Fiscal Year (FFY) 2012 Appropriations Act (Pub. L. 112–55).	2/24/2012	X	.....
673	Extension—Administering the Community Service and Self Sufficiency Requirement (CSSR).	2/22/2012	X	.....
674	Indian Housing Plan/Annual Performance Report Form—Form HUD–52737	2/22/2012	X	.....
675	Implementation of the Federal Fiscal Year 2012 Funding Provisions for the Housing Choice Voucher Program.	2/8/2012	X	.....
676	Demolition/disposition of public housing and associated requirements for PHA Plans, resident consultation, Section 3 and application processing.	2/2/2012	X	.....
677	Extension of Notice 2010–49: Protecting Tenants at Foreclosure Act—Guidance on New Tenant Protections.	12/16/2011	X	.....
678	Implementation of New Cash Management Requirements for the Housing Choice Voucher Program.	12/9/2011	X	.....
679	Terminal Guidance on Disaster Housing Assistance Program—Ike (DHAP—Ike) and Extension Operating Requirements.	12/7/2011	X	.....
680	Extension—Guidance on requirement for PHAs to record current Declaration of Trusts (DOTs) against all public housing property and guidance on adding and removing public housing units and other property from the Annual Contributions Contract (ACC).	11/1/2011	X	.....
681	Public Housing Operating Subsidy Calculations for Calendar Year 2012	9/26/2011	X	.....
682	• Examples of Allocation Adjustments	.....	X	.....
683	Guidance on the Project-Based Voucher Program	9/20/2011	X	.....
684	Project-Basing HUD-Veterans Affairs Supportive Housing Vouchers	9/15/2011	X	.....
685	Guidance on Reporting Public Housing Agency Executive Compensation Information and Conducting Comparability Analysis.	8/26/2011	X	.....
686	• Attachment.	.....	X	.....
687	Extension—Administrative Requirements for Investing Indian Housing Block Grant (IHBG) Funds.	7/21/2011	X	.....
688	Extension—Demonstration Program—Self-Determined Housing Activities for Tribal Governments.	7/21/2011	X	.....
689	Extension: Information and Procedures for Implementation of Capital Funds Recovery Competition Grants.	7/13/2011	X	.....
690	Extension: Consolidated Guidance on Disaster Housing Assistance Program—Ike (DHAP—Ike) and Extension Operating Requirements.	6/30/2011	X	.....
691	Extension—Continuation of Disaster Voucher Program (DVP) Housing Assistance Payments.	6/28/2011	X	.....
692	Policies and Procedures for Special Purpose Housing Choice Vouchers for Non-Elderly Disabled Families and Other Special Populations.	6/14/2011	X	.....
693	Implementation of the Federal Fiscal Year 2011 Funding Provisions for the Housing Choice Voucher Program.	6/2/2011	X	.....
694	Extension—Establishing a Micro Purchase Process for Purchases Less Than $5,000 for Indian Housing Block Grant (IHBG) Recipients.	5/25/2011	X	.....
695	Extension: Administrative Guidance for Effective and Mandated Use of the Enterprise Income Verification (EIV) System.	5/30/2011	X	.....
696	Asset-Repositioning Fee	4/12/2011	X	.....
697	Extension of Notice PIH 2010–08, Renewal of Project-Based Certificate Housing Assistance Payments Contracts.	3/31/2011	X	.....
698	Public Housing Operating Subsidy Calculations for Calendar Year 2011	3/18/2011	X	.....
699	Guidelines for Undertaking Financing Unsecured by Public Housing Assets	2/24/2011	X	.....

APPENDIX A—PUBLIC AND INDIAN HOUSING NOTICES—Continued

	Name of document	Date	Arch	Remove
700	Reissuance of PIH Notice 2009–31—PIH Implementation Guidance for the Buy American Requirement of the American Recovery and Reinvestment Act of 2009 including Process for Applying Exceptions.	2/17/2011	X	.....
701	Extension—Administering the Community Service and Self Sufficiency Requirement (CSSR).	2/11/2011	X	.....
702	Appeals under the Operating Fund Program for Calendar Year 2011	2/11/2011	X	.....
703	Extension—Guidance for Obtaining HUD Consent for Takings of Public Housing Property by Eminent Domain.	1/28/2011	X	.....
704	Amendment to PIH Notice 2010–40 on Set-Aside Funding Availability for Project-Basing HUD-Veterans Affairs Supportive Housing Vouchers.	1/27/2011	X	.....
705	Reissuance of PIH Notice 2009–12—Information and Procedures for Processing American Recovery and Reinvestment Act Capital Fund Formula Grants.	1/21/2011	X	.....
706	Housing Choice Voucher Family Moves with Continued Assistance	1/19/2011	X	.....
707	Extension: Guidance—Verification of Social Security Numbers (SSNs), Social Security (SS) and Supplemental Security Income (SSI) Benefits.	1/12/2011	X	.....
708	Rent to Owners in subsidized projects under the Housing Choice Voucher (HCV) program.	1/12/2011	X	.....
709	Effective Use of the Enterprise Income Verification (EIV) System's Deceased Tenants Report to Reduce Subsidy Payment & Administrative Errors.	12/30/2010	X	.....
710	Protecting Tenants at Foreclosure Act—Guidance on New Tenant Protections	12/28/2010	X	.....
711	Extension—Cost-Test and Market Analyses Guidelines for the Voluntary Conversion of Public Housing Units Pursuant to 24 CFR part 972.	10/1/2010	X	.....
712	Performance of Physical Needs Assessments by Public Housing Authorities	11/10/2010	X	.....
713	Financial Reporting Requirements for the Housing Choice Voucher Program Submitted through the Financial Assessment Subsystem for Public Housing and the Voucher Management System.	10/29/2010	X	.....
714	Revision and Extension of Guidance on requirement for PHAs to record current Declaration of Trusts (DOTs) against all public housing property and guidance on adding and removing public housing units and other property from the Annual Contributions Contract (ACC).	10/20/2010	X	.....
715	Continuation of Disaster Voucher Program (DVP) Housing Assistance Payments	10/19/2010	X	.....
716	Certification of accuracy of data in the Inventory Management/Public Housing Information Center System used to calculate the Capital Fund formula allocation.	10/13/2010	X	.....
717	Using Energy Star to Promote Energy Efficiency in Public Housing	10/12/2010	X	.....
718	Set-Aside Funding Availability for Project-Basing HUD Veterans Affairs Supportive Housing Vouchers.	9/28/2010	X	.....
719	Process for Public Housing Agency Voluntary Transfers of Housing Choice Vouchers, Project-Based Vouchers and Project-Based Certificates.	9/28/2010	X	.....
720	Operating Fund Program: Guidance on Demonstration of Successful Conversion to Asset Management to Discontinue the Reduction of Operating Subsidy, Year 5 Applications.	9/7/2010	X	.....
721	Information and Procedures for Implementation of Capital Funds Recovery Competition Grants.	8/10/2010	X	.....
722	Transactions between Public Housing Agencies and their Related Affiliates and Instrumentalities.	8/2/2010	X	.....
723	Request for Applications under the Moving to Work Demonstration Program ..... • MTW Optional Eligibility Worksheet.	7/30/2010	X	.....
724	Extension of Notice PIH 2009–23 (HA)—Requirement for Designation of Public Housing Projects.	7/30/2010	X	.....
725	Non-Discrimination and Accessibility for Persons with Disabilities	7/26/2010	X	.....
726	Timely Reporting Requirements of the Family Report (form HUD–50058 and form HUD–50058 MTW) into the Public and Indian Housing Information Center.	7/7/2010	X	.....
727	Emergency Safety and Security Funding as it Relates to the Omnibus Appropriations Act, 2009 [Pub. L. 111–8] and the Consolidated Appropriations Act, 2010 [Pub. L. 111–117].	6/28/2010	X	.....
728	Project-Basing HUD-Veterans Affairs Supportive Housing Vouchers	6/25/2010	X	.....
729	Consolidated Guidance on Disaster Housing Assistance Program—Ike (DHAP—Ike) and Extension Operating Requirements.	6/17/2010	X	.....
730	Processing Information for the Submission of Replacement Housing Factor (RHF) Plans • Attachment.	5/24/2010	X	.....
731	Public Housing Development Cost Limits ..... • TDC Housing Cap Limits for FY 2010.	5/24/2010	X	.....
732	Administrative Guidance for Effective and Mandated Use of the Enterprise Income Verification (EIV) System. • Attachment 1. • Attachment 2.	5/17/2010	X	.....
733	Revision to HUD Notice PIH 2009–51 PHA Determinations of Rent Reasonableness in the Housing Choice Voucher (HCV) Program—Comparable Unassisted Units in the Premises.	5/10/2010	X	.....
734	Voucher Management System Enhancements and Reporting Requirements	5/6/2010	X	.....
735	U.S. Department of Housing and Urban Development (HUD) Privacy Protection Guidance for Third Parties.	5/6/2010	X	.....

APPENDIX A—PUBLIC AND INDIAN HOUSING NOTICES—Continued

	Name of document	Date	Arch	Remove
736	HUD Funding for Non-Presidentially Declared Natural Disasters	4/28/2010	X	
737	Reinstatement and Extension of Notice PIH 2008–12 (HA), Enhanced Voucher Requirements for Over-housed Families.	4/19/2010	X	
738	Reporting Requirements for the HUD-Veterans Affairs Supportive Housing Program • Attachment.	4/13/2010	X	
739	HQS Inspections for the Housing Choice Voucher Program and Guidance Related to Electrical Outlets.	3/31/2010	X	
740	Effective Use of the Enterprise Income Verification (EIV) System's Deceased Tenants Report to Reduce Subsidy Payment & Administrative Errors.	3/30/2010	X	
741	Reporting of Administrative Fee Reserves	3/12/2010	X	
742	Changes to Unit Reporting in Public Housing Information Center (PIC)	3/8/2010	X	
743	Implementation of the Federal Fiscal Year 2010 Funding Provisions for the Housing Choice Voucher Program.	2/16/2010	X	
744	Extension—Guidance for Obtaining HUD Consent for Takings of Public Housing Property by Eminent Domain.	1/22/2010	X	
745	Guidance—Verification of Social Security Numbers (SSNs), Social Security (SS) and Supplemental Security Income (SSI) Benefits.	1/20/2010	X	
746	Appeals under the Operating Fund Program for Calendar Year 2010	1/20/2010	X	
747	Extension of the Disaster Voucher Program (DVP)	1/5/2010	X	
748	Protecting Tenants at Foreclosure Act—Guidance on New Tenant Protections	12/15/2009	X	
749	PHA Determinations of Rent Reasonableness in the Housing Choice Voucher (HCV) Program—Comparable Unassisted Units in the Premises.	12/11/2009	X	
750	Administering the Community Service and Self-Sufficiency Requirement (CSSR)	11/25/2009	X	
751	Public Housing Operating Subsidy Calculations for Calendar Year 2010	11/19/2009	X	
752	Submission of Calendar Year 2009 Notices of Intent and Fungibility Plans by PHAs in Hurricane Katrina and Rita Disaster Areas Authorized to Combine Section 8(o) and 9(d)(e) Funding Under Section 901 of 2006 Emergency Supplemental Appropriations, as Extended by 2008 Emergency and Supplemental Appropriations.	11/6/2009	X	
753	Cost-Savings Measures in the Housing Choice Voucher (HCV) Program	10/23/2009	X	
754	Renewable energy and green construction practices in Public Housing	10/16/2009	X	
755	Extension-Cost-Test and Market Analyses Guidelines for the Voluntary Conversion of Public Housing Units Pursuant to 24 CFR part 972.	10/13/2009	X	
756	Processing requests for regulatory waivers	10/5/2009	X	
757	Distribution of Fiscal Year (FY) 2009 Administrative Fee	9/29/2009	X	
758	Prohibition on Public Housing Agencies Charging Application Fees	9/25/2009	X	
759	Independent Auditor Report Submission for Public Housing Agencies	9/22/2009	X	
760	Treatment of Income for Participants of Public Housing and Section 8 programs that qualify for payment adjustments under the American Recovery and Reinvestment Act (ARRA).	9/24/2009	X	
761	Supplemental Information to Application for Assistance Regarding Identification of Family Member, Friend or Other Person or Organization Supportive of a Tenant for Occupancy in HUD Assisted Housing.	9/15/2009	X	
762	State Lifetime Sex Offender Registration	9/9/2009	X	
763	Supplemental Asset Management Financial Reporting Information-Transition Year 1	9/8/2009	X	
764	Capital Fund Program Awards for FY 2009	9/3/2009	X	
765	Operating Fund Program: Guidance on Demonstration of Successful Conversion to Asset Management to Discontinue the Reduction of Operating Subsidy, Year 4 Applications.	8/26/2009	X	
766	Requirement of the American Recovery and Reinvestment Act of 2009 including Process for Applying Exceptions.	8/21/2009	X	
767	Request for Applications under the Moving to Work Demonstration Program	8/19/2009	X	
768	Guidance on requirement for PHAs to record current Declaration of Trusts (DOTs) against all public housing property and guidance on adding and removing public housing units and other property from the Annual Contributions Contract (ACC).	8/14/2009	X	
769	Implementation of the Federal Fiscal Year 2009 Funding Provisions for the Housing Choice Voucher Program—Award of Remaining Set-Aside Funds.	8/4/2009	X	
770	Energy Investment Guidance Under American Recovery and Reinvestment Act (Recovery Act) of 2009 (H.R. 1).	7/30/2009	X	
771	Transactions between Public Housing Agencies and their Related Affiliates and Instrumentalities.	7/23/2009	X	
772	Over Subsidization in the Housing Choice Voucher Program	7/21/2009	X	
773	Non-Smoking Policies in Public Housing	7/17/2009	X	
774	Guidance on the Asset-Repositioning Fee Under 24 CFR 990.190(h) and Guidance on Re-occupying Public Housing Units Proposed or Approved for Demolition, Disposition, or Transition to Homeownership.	7/17/2009	X	
775	Guidance on Energy Performance Contracts, including those with terms up to 20 years	6/12/2009	X	
776	Implementation of the Federal Fiscal Year 2009 Funding Provisions for the Housing Choice Voucher Program.	5/6/2009	X	
777	Information and Procedures for Processing American Recovery and Reinvestment Act Capital Fund Formula Grants.	3/18/2009	X	
778	Project-Basing HUD-Veterans Affairs Supportive Housing Vouchers	3/16/2009	X	
779	Appeals under the Operating Fund Program for Calendar Year 2009	3/5/2009	X	

APPENDIX A—PUBLIC AND INDIAN HOUSING NOTICES—Continued

	Name of document	Date	Arch	Remove
780	Using ENERGY STAR to Promote Energy Efficiency in Public Housing	3/5/2009	X	
781	Extension of the Disaster Voucher Program (DVP)	2/24/2009	X	
782	Submission of Calendar Year 2008 Notices of Intent and Fungibility Plans by PHAs in Hurricane Katrina and Rita Disaster Areas Authorized to Combine Section 8(o) and 9(d)(e) Funding Under Section 901 of 2006 Emergency Supplemental Appropriations, as Extended by 2008 Emergency and Supplemental Appropriations.	1/16/2009	X	
783	Operating Fund Program: Calculation of Transition Funding Amounts for Calendar Year 2009.	1/16/2009	X	
784	Guidance for Obtaining HUD Consent for Takings of Public Housing Property by Eminent Domain.	1/2/2009	X	
785	• Attachment—Extension Notice.		X	
786	Public Housing Development Cost Limits	12/22/2008	X	
787	• Public Housing Development Cost Limits (pdf version)	12/22/2008	X	
788	Certification of accuracy of data in the Inventory/Management/Public Housing Information Center System used to calculate the Capital Fund formula allocation.	12/10/2008	X	
789	Disaster Housing Assistance Program—Ike (DHAP—Ike) Case Management Guidelines	12/10/2008	X	
790	Verification of Social Security (SS) and Supplemental Security Income (SSI) Benefits	12/4/2008	X	
791	Housing Choice Voucher Portability Procedures and Corrective Actions	12/3/2008	X	
792	Public Housing Agency (PHA) Five-Year and Annual Plan Process for all PHAs	11/13/2008	X	
793	Income exclusion of kinship care payments when foster children are placed with relatives.	11/4/2008	X	
794	Processing Changes for Voucher Management System (VMS) Data—Housing Choice Voucher Program.	11/3/2008	X	
795	Disaster Housing Assistance Program—Ike (DHAP—Ike) Operating Requirements	10/14/2008	X	
796	Reporting Requirements for the HUD-Veterans Affairs Supportive Housing Program	10/14/2008	X	
797	Extension of the Disaster Voucher Program (DVP)	10/1/2008	X	
798	Cost-Test and Market Analyses Guidelines for the Voluntary Conversion of Public Housing Units Pursuant to 24 CFR part 972.	8/20/2008	X	
799	Public Housing Operating Subsidy Calculations for Calendar Year (CY) 2009	8/14/2008	X	
800	Reinstatement of PIH Notice 2006–19, Recipient Inspection of Housing Units Assisted Under the Native American Housing Assistance and Self-Determination Act of 1996 (NAHASDA) and Those Assisted Under the United States Housing Act of 1937.	8/8/2008	X	
801	Operating Fund Program: Guidance on Demonstration of Successful Conversion to Asset Management to Discontinue the Reduction of Operating Subsidy, Year 3 Applications.	7/17/2008	X	
802	Income exclusion of Kinship Guardian Assistant Payments (Kin-GAP) and other guardianship care payments.	7/14/2008	X	
803	Extension of the Disaster Voucher Program (DVP)	7/8/2008	X	
804	Extension—Housing Choice Voucher Program—Enhanced Vouchers—Adjustment of Voucher Housing Assistance Payments for Certain Families that Received ''Preservation'' Voucher Assistance as the Result of an Owner Prepayment or Voluntary Termination of Mortgage Insurance for a Preservation Eligible Property in Federal Fiscal Year (FY) 1997, FY 1998, and FY 1999.	7/2/2008	X	
805	PIH 2007–15 (HA) Regarding the Applicability of Public Housing Development Requirements to Transactions between Public Housing Agencies and their Related Affiliates and Instrumentalities.	7/2/2008	X	
806	Renewable energy and green construction practices in Public Housing	6/11/2008	X	
807	Extension—Guidance on Integrated Pest Management	5/29/2008	X	
808	Exclusion of tax rebates from the Internal Revenue Service (IRS) under the Economic Stimulus Act of 2008.	5/16/2008	X	
809	Guidance on Energy Performance Contracts, including those with terms up to 20 years	4/25/2008	X	
810	Disaster Housing Assistance Program (DHAP) Revisions to the Operating Requirements and Processing Guidance for Phase 3 Families; Suspension of the Incremental Rent Transition Requirement for Phase 2 and Phase 3 Families; Supplemental Guidance on Pre-Transition and Case Management Fees and Use of Disaster Information System (DIS) Information to Determine Family Unit Size under the PHA Subsidy Standards.	4/16/2008	X	
811	Over Subsidization in the Housing Choice Voucher Program	4/16/2008	X	
812	Extension—Process for Public Housing Agency Voluntary Transfers of Housing Choice Vouchers, Project-Based Vouchers and Project-Based Certificates.	3/31/2008	X	
813	Information on Upcoming Rulemaking Associated with the Public Housing Assessment System as a Result of the Conversion to Asset Management..	3/27/2008	X	
814	Guidance on Disposition of Excess Equipment and Non-Dwelling Real Property under Asset Management.	3/25/2008	X	
815	Guidance on Asset Management Provisions in the Consolidated Appropriations Act, 2008.	3/25/2008	X	
816	Implementation of Federal Fiscal Year 2008 Funding Provisions for the Housing Choice Voucher Program.	3/20/2008	X	
817	Renewal of Project-Based Certificate Housing Assistance Payments Contracts • Attachment—Addendum to the Section 8 Project-based Voucher Housing Assistance Payments (HAP) Contract for Existing Housing.	3/18/2008	X	

APPENDIX A—PUBLIC AND INDIAN HOUSING NOTICES—Continued

	Name of document	Date	Arch	Remove
818	Requests for Exception Payment Standards for Persons with Disabilities as a Reasonable Accommodation.	3/10/2008	X	.....
819	Reporting Requirements and Sanctions Policy under the Public Housing Program for the Family Report (Form HUD–50058) to the Office of Public and Indian Housing (PIH) Information Center (PIC).	2/6/2008	X	.....
820	Extension of Notice PIH 2007–1 (HA)—Requirement for Designation of Public Housing Projects.	1/31/2008	X	.....
821	Financial Reporting Requirements for the Housing Choice Voucher Program Submitted through the Financial Assessment Subsystem for Public Housing and the Voucher Management System.	1/30/2008	X	.....
822	Certification of accuracy of data in the Public Housing Information Center System used to calculate the Capital Fund formula allocation in Fiscal Year 2008.	1/24/2008	X	.....
823	Allocation of Funds Remaining under the Fiscal Year (FY) 2007 $100 Million Set-Aside and Availability of Special Fees for Public Housing Agencies (PHAs) Needing Additional Funds in the Operation of the Housing Choice Voucher (HCV) Program.	1/18/2008	X	.....
824	Guidance on Appeals under 24 CFR part 990, subpart G, for Calendar Year 2008	1/16/2008	X	.....
825	Guidance for Obtaining HUD Consent for Takings of Public Housing Property by Eminent Domain.	1/4/2008	X	.....
826	PIH 2010–8 (HA) Renewal of Project-Based Certificate Housing Assistance Payments Contracts.	3/26/2010	X	.....
827	PIH 2010–51 (HA) Over Subsidization in the Housing Choice Voucher Program	1/1/2011	X	.....

APPENDIX B—PUBLIC AND INDIAN HOUSING—OTHER GUIDANCE

	Name of document	Date	Arch	Remove
1	$80 Million HCV Competition Letter for PHAs in Hurricanes Katrina and Rita Disaster Impacted Areas.	7/21/2009	X	.....
2	Congressional Notifications on HCV Awards to PHAs under $80 million Competition	8/25/2009	X	.....
3	THU to HCV Conversion Process Flow Chart	6/11/2009	X	.....
4	Map of HCV Funding Awards and THU Concentrations by Housing Authority Area	No Date	X	.....
5	Checklist for THU to HCV Applicants	8/21/2009	X	.....
6	THU to HCV Frequently Asked Questions	12/12/2009	X	.....
7	Disaster Rent Subsidy Contract for Phase 2 and Phase 3 Families Disaster Housing Assistance Program—Disaster Rent Subsidy Contract.	No Date	X	.....
8	Disaster Rent Subsidy Contract for Phase 2 and Phase 3 Families Disaster Housing Assistance Program—Lease Addendum.	No Date	X	.....
9	Disaster Rent Subsidy Contract for Phase 2 and Phase 3 Families Disaster Housing Assistance Program—Disaster Rent Subsidy Contract.	No Date	X	.....
10	Disaster Rent Subsidy Contract for Phase 2 and Phase 3 Families Disaster Housing Assistance Program—Lease Addendum.	No Date	X	.....
11	Phase 3 Families Data Collection Needs	No Date	X	.....
12	Disaster Housing Assistance Program Frequently Asked Questions, Set 2 January 3, 2008.	1/3/2008	X	.....
13	Disaster Housing Assistance Program Frequently Asked Questions, Set 2 December 26, 2007.	12/26/2007	X	.....
14	Disaster Housing Assistance Program Frequently Asked Questions, Set 1 AUGUST 30, 2007.	8/30/2007	X	.....
15	**Federal Register** Notice Announcing Implementation of DHAP	8/17/2007	X	.....
16	DIS Update (MS-PowerPoint, 787 KB)	6/3/2008	X	.....
17	Chart of DHAP Phases	8/19/2008	X	.....
18	Phase 3 Family Processing Cross Functional Chart—With FEMA TRO Approval	No Date	X	.....
19	DIS System Review Slides	4/10/2008	X	.....
20	DIS Improvements Agenda	3/6/2008	X	.....
21	DIS Improvements Presentations	3/6/2008	X	.....
22	DHAP Contact List	3/6/2008	X	.....
23	Using the DIS* System: Updating Family Information for the Disaster Housing Assistance Program. (DHAP)	12/13/2007	X	.....
24	EOP Instructions	12/13/2007	X	.....
25	Satellite Broadcast 11–08–07 documents	11/8/2007	X	.....
26	Satellite Broadcast DIS System Agenda (MS-Word)	10/18/2007	X	.....
27	DIS New Fields (MS-Word)	10/18/2007	X	.....
28	Family Processing Map	10/18/2007	X	.....
29	Family Processing Map Symbol Legend (MS-Word)	10/18/2007	X	.....
30	Sample EOP (MS-Word)	10/18/2007	X	.....
31	Sample PHA Reassignment (MS-Word)	10/18/2007	X	.....
32	DHAP Satellite Broadcast PowerPoint Slides (MS-PowerPoint)	8/21/2007	X	.....
33	FAQ DHAP to HCV 9–17–09	9/17/2009	X	.....
34	FAQ DHAP to HCV 2–3–09	2/3/2009	X	.....
35	FAQ DHAP to HCV 1–7–09	1/7/2009	X	.....

APPENDIX B—PUBLIC AND INDIAN HOUSING—OTHER GUIDANCE—Continued

	Name of document	Date	Arch	Remove
36	HUD/FEMA Interagency Agreement (IAA)	No Date	X	
37	IAA Appendix A (MS-Excel)	7/20/2007	X	
38	DHAP Grant Agreement	8/21/2007	X	
39	PHAs Not Participating in the Disaster Housing Assistance Program (DHAP) (MS-Excel)	11/30/2007	X	
40	List of PHAs participating in DHAP as of 5–28–08 (MS-Excel)	5/28/2008	X	
41	DVP Addendum, Part D To The Tenant-Based Voucher HAP Contract (form HUD–52641).	No Date	X	
42	Grant Agreement Amendment for September and October 2009 TRPs	8/14/2009	X	
43	HUD/FEMA IAA Modification authorizing September and October 2009 TRPs	8/13/2009	X	
44	Policy Guidelines for September and October 2009 TRPs	8/14/2009	X	
45	Conditions to receive September and October 2009 TRPs	No Date	X	
46	Frequently Asked Questions—September and October 2009 TRPs	No Date	X	
47	Inter Agency Agreement (IAA)	2/19/2009	X	
48	PHA Grant Amendment—Final	No Date	X	
49	Letter to States Requesting Transitional Case Management	No Date	X	
50	Transitional Closeout Case Management Requests	No Date	X	
51	DHAP-Katrina Transitional Closeout Operating Requirements	2/21/2009	X	
52	DHAP Transitional Close-Out Process	No Date	X	
53	DHAP Katrina Transitional Closeout Welcome Letter	No Date	X	
54	Letter to Tenant (MS-Word)	2/24/2009	X	
55	Letter Agreement Attachment B	2/24/2009	X	
56	Landlord EFT Letter (MS-Word)	2/24/2009	X	
57	Landlord Check Letter (MS-Word)	2/24/2009	X	
58	New Landlord Letter Template (MS-Word)	2/24/2009	X	
59	DHAP-Ike Lease Addendum	No Date	X	
60	Disaster Rent Subsidy Contract (DRSC)	No Date	X	
61	Ike Family Obligations	No Date	X	
62	DHAP-Ike Reconciliation	No Date	X	
63	Case Management Updates	5/3/2011	X	
64	FAQ Updates	5/3/2011	X	
65	DIS System Improvements	1/21/2009	X	
66	DIS New fields	No Date	X	
67	Broadcast Agenda	No Date	X	
68	DHAP-Ike Family Processing Map	No Date	X	
69	Case Management Software	No Date	X	
70	DHAP-Ike Case Management FAQs 9.28.09	9/28/2009	X	
71	DHAP-Ike Frequently Asked Questions Updated as of March 16, 2011	3/16/2011	X	
72	List of DHAP-Ike participating PHAs as of 12–15–2008 (MS-Excel)	12/29/2008	X	
73	DHAP-Ike Grant Agreement	9/28/2009	X	
74	HUD/FEMA Interagency Agreement (IAA) for DHAP-Ike	9/23/2008	X	
75	DHAP-Ike Attachment A	No Date	X	
76	Weekly Reports as of 09–26–2011	9/26/2011	X	
77	Weekly Reports as of 09–12–2011	9/12/2011	X	
78	Weekly Reports as of 09–05–2011	9/2/2011	X	
79	Weekly Reports as of 08–31–2011	8/29/2011	X	
80	Weekly Reports as of 08–22–2011	8/22/2011	X	
81	Weekly Reports as of 08–15–2011	8/15/2011	X	
82	Weekly Reports as of 08–08–2011	8/8/2011	X	
83	Weekly Reports as of 08–01–2011	8/1/2011	X	
84	Disaster Voucher Program (DVP) Instruction Letter #8 Extension of DVP for Pre-disaster Public Housing, Project-based, Homeless and Special Needs Housing Families.	11/4/2009	X	
85	Pre-Disaster Public Housing, Project-based, Homeless and Special Needs Housing (Letter 6).	1/13/2009	X	
86	Pre-disaster Public Housing, Project-based, Homeless and Special Needs Housing (Letter 5).	No Date	X	
87	Pre-disaster Public Housing, Project-based, Homeless and Special Needs Housing Families (Extension of assistance letter 4).	No Date	X	
88	Pre-disaster Public Housing, Project-based, and Homeless and Special Needs Housing Families (Letter 3).	No Date	X	
89	Processing Instructions for Pre-disaster Public Housing, Project-based and Special Needs Housing Families (Letter 2).	No Date	X	
90	Processing Instructions for the Conversion of Pre-disaster Tenant-based Voucher Families from DVP to HCV Assistance (Letter 1).	No Date	X	
91	Rental Assistance for Special Needs Families Displaced by Hurricanes Katrina and Rita	No Date	X	
92	Tenant Protection Voucher (TPV) Final Instruction Letter	No Date	X	
93	Clarification on Income Eligibility Guidelines for Pre-Disaster Multifamily Residents (Letter 7).	7/2/2009	X	
94	Current status of Office of Multifamily properties affected by Hurricanes Katrina and Rita in New Orleans, LA..	No Date	X	
95	PHA Outreach Letter	11/10/2009	X	
96	Family Outreach Letter	No Date	X	
97	List of PHAs that Received Special Appropriation Funding	No Date	X	

APPENDIX B—PUBLIC AND INDIAN HOUSING—OTHER GUIDANCE—Continued

	Name of document	Date	Arch	Remove
98	Processing Centers for HUD Assisted Families	No Date	X	
99	Sample Record of Intake	No Date	X	
100	Sample Special Needs Eligibility Verification/Certification	No Date	X	
101	List of Special Needs Administering Agencies (SNAAs) Willing to Perform DVP-Related Functions (MS-Excel, 48 KB).	2/10/2006	X	
102	Amendment to Katrina Disaster Rent Subsidy Contract	No Date	X	
103	Amendment to KDHAP Lease Addendum	No Date	X	
104	Contact Information	No Date	X	
105	Consolidated Katrina Disaster Contributions Contract	No Date	X	
106	Katrina Disaster Rent Subsidy Contract and Lease Addendum	No Date	X	
107	KDHAP Questions and Answers	11/16/2005	X	
108	KDHAP Application—User Guide	12/1/2005	X	
109	PIH Administrative Waivers for Hurricane Wilma	3/7/2006	X	
110	PIH Administrative Waivers for Hurricane Rita	10/25/2005	X	
111	Rita Checklist—Regulatory Suspension Notifications and Waiver Requests (MS-Word)	10/26/2005	X	
112	PIH Administrative Final Waivers for Katrina Relief	9/27/2005	X	
113	Verification of Family Assistance	No Date	X	
114	Extension of PIH Administrative Waivers for Hurricanes Katrina, Rita and Wilma	No Date	X	
115	Katrina, Rita and Wilma Checklist—Regulatory Suspension Notifications and Waiver Requests (MS-Word).	12/28/2006	X	
116	HVC inspection form	No Date	X	
117	Letter to PHAs and Directors of Public Housing	2/2/2002	X	
118	Public Housing Occupancy Handbook	No Date	X	
119	The Resident Newsletter	2010–2014	X	
120	PHECC Resident Newsletter	2003–2014	X	
121	PH Asset Management Newsletter	2007–2013	X	
122	HCV Newsletter	2010–2012	X	
123	MTW Quarterly Newsletter	2011–2012	X	
124	CY 2011 PHA Guidance for Appeals for Changing Market Conditions	2011	X	
125	CY 2012 Formula Income Methodology and Guidance	2012	X	
126	CY 2013 Formula Income Methodology	2013	X	
127	Guidance on Funding CY 2013 New Projects and Units	2013	X	
128	CY 2014 Formula Income Methodology	2014	X	
129	Guidance on Funding CY 2014 New Projects and Units	2014	X	
130	CY 2015 Formula Income Methodology	2015	X	
131	Guidance on Funding CY 2015 New Projects and Units	2015	X	
132	Amended Lead Safe Housing Rule Video Series	11/5/2018	X	
133	Useful Life and Binding Commitments	5/10/2013	X	
134	Income Limits	5/4/2012	X	
135	(Recipient)—Income Limits under the Native American Housing Assistance and Self Determination Act of 1996.	3/31/2003	X	
136	Federal Financial Report (FFR)—Standard Form 425 for Indian Housing Block Grant Program.	1/5/2012	X	
137	Federal Financial Report (FFR)—Standard Form 425	1/4/2012	X	
138	Income Limits	4/19/2013	X	
139	Criminal History Guidance	8/19/2013	X	
140	Income Limits	1/30/2014	X	
141	Guidance for the Word and Excel Versions of the Indian Housing Plan/Annual Performance Report—Attachment.	9/22/2014	X	
142	Guidance for the Word and Excel Versions of the Indian Housing Plan/Annual Performance Report (Attachment).	9/22/2014 9/14/2018	X	
143	Income Limits under the Native American Housing Assistance and Self-Determination Act of 1996.	4/6/2015	X	
144	Income Limits under the Native American Housing Assistance and Self-Determination Act of 1996.	4/1/2016	X	
145	Indian Community Development Block Grant (ICDBG) Imminent Threat (IT) program	10/28/2016	X	
146	Indian Community Development Block Grant (ICDBG) Imminent Threat (IT) program	1/11/2017	X	
147	Income Limits under the Native American Housing Assistance and Self-Determination Act of 1996 (NAHASDA).	5/18/2017	X	
148	(Recipient)—Income Limits under the Native American Housing Assistance and Self-Determination Act of 1996.	2/10/2004	X	
149	(Recipient)—IHBG	9/8/2004	X	
150	(Recipient)—Income Limits under the Native American Housing Assistance and Self Determination Act of 1996 and the U.S. Housing Act of 1937.	2/12/2002	X	
151	(Tribe/TDHE)—Income Limits under the Native American Housing Assistance and Self-Determination Act of 1996.	4/17/2001	X	
152	(Tribe/TDHE)—Income Limits under NAHASDA	3/15/2000	X	
153	(Tribe/TDHE)—Calculating Annual Income under NAHASDA	2/1/1999	X	
154	(Tribe/TDHE)—Income Limits	2/11/1999	X	
155	(Tribe/TDHE)—Transition Guidance for Insurance Requirements	12/18/1998	X	
156	(Tribe/TDHE)—Income Limits	6/22/1998	X	
157	Homeownership Monitoring Review Checklist	No Date	X	

APPENDIX B—PUBLIC AND INDIAN HOUSING—OTHER GUIDANCE—Continued

	Name of document	Date	Arch	Remove
158	Conversion Desk Guide	12/1/2009	X	.....
159	Conversion Training Materials	8/1/2008	X	.....
160	PHA Plan (HERA) guidance	No Date	X	.....
161	Implication of "days of relocation" in SAC application	No Date	X	.....
162	Income Limits under NAHASDA for FY 2018 (Amended 6/18/2018)	6/18/2018	X	.....

APPENDIX C—COMMUNITY PLANNING AND DEVELOPMENT

	Name of document	Date	Arch	Remove
1	Implementing Risk Analyses for Monitoring Community Planning and Development Grant Programs for Fiscal Year 2003.	12/19/2002	X	.....
2	Implementing Risk Analyses for Monitoring Community Planning and Development Grant (CPD) Programs for Fiscal Year 2004.	2/2/2004	X	.....
3	Implementing Risk Analyses for Monitoring Community Planning and Development Grant Programs for Fiscal Year 2005.	10/28/2004	X	.....
4	Implementing Risk Analyses for Monitoring Community Planning and Development Grant Programs for FY 2006.	9/12/2005	X	.....
5	Implementing Risk Analyses for Monitoring Community Planning and Development Grant Programs in FY 2007.	10/23/2006	X	.....
6	Implementing Risk Analyses for Monitoring Community Planning and Development Grant Programs in FY 2008.	10/19/2007	X	.....
7	Implementing Risk Analyses for Monitoring Community Planning and Development Grant Programs in FY 2010 and 2011.	8/24/2009	X	.....
8	Capacity Building for Community Development and Affordable Housing	No Date	X	.....
9	Standards for HOPWA Short-term Rent, Mortgage, and Utility (STRMU) Payments and Connections to Permanent Housing.	8/3/2006	X	.....
10	Eligibility for Formula Allocations under HOPWA FY 2004	10/14/2003	X	.....
11	Environmental Policy for HOPWA Program—Handbook 1390.5	11/23/1995	X	.....
12	Use of HOPWA Grant Funds for Participation at 2015 HIV/AIDS Conferences	6/3/2015	X	.....
13	Meaningful Dialogue on Housing and Health HOPWA Presentation	4/13/2012	X	.....
14	HOPWA Modernization Proposal	3/1/2012	X	.....
15	2011 HOPWA Performance Reporting Update	10/28/2011	X	.....
16	HOPWA Financial Management Online Training Overview Webinar	10/26/2011	X	.....
17	HOPWA Financial Management Online Training	10/26/2011	X	.....
18	HOPWA Fact Sheet	7/1/2011	X	.....
19	HUD's Implementation Plan for the National HIV/AIDS Strategy	2/1/2011	X	.....
20	HOPWA CAPER Training Modules	11/1/2009	X	.....
21	HOPWA APR Training Modules	11/1/2009	X	.....
22	Standards for Short-term Rent, Mortgage, and/or Utility Assistance (STRMU) Payments	11/5/2002	X	.....
23	HOPWA Advance Payment Guidance, Iowa Finance Authority Request, CPD Comptroller Response.	5/1/2002	X	.....
24	An Action Guide for Involving Low-Income Communities: As it relates to HOPWA	6/1/2001	X	.....
25	ADAP Guidance	1/21/1998	X	.....
26	HOME FACTS Vol. 1, No. 2: PJ Process to Request a Reduction to the CHDO Set Aside.	5/1/2008	X	.....
27	HOME FACTS Vol. 1, No. 3: Using the IDIS PR 27 Status of HOME Grants Report to Compute Commitments.	4/1/2015	X	.....
28	HOME FACTS Vol. 2, No. 1: Determination of a HOME PJ's 24-Month Commitment Period Beginning and End Date.	1/1/2009	X	.....
29	HOME FACTS Vol. 2, No. 3: Field Office Process for Determining Compliance with HOME's Commitment, CHDO Reservation, and Expenditure Requirements.	12/1/2014	X	.....
30	HOME FACTS Vol. 3, No. 1: HOME Activities with Commitments in IDIS that are Over 12 Months Old with No Funds Disbursed.	2/1/2014	X	.....
31	HOME FACTS Vol. 5, No. 1 : How IDIS Treats Open HOME Activities in Final Draw for More Than 120 days.	3/1/2013	X	.....
32	HOME FACTS Vol. 6, No. 1: CHDO Reservation and Expenditure Requirements	4/1/2015	X	.....
33	HOMEfires Vol. 1 No. 10: Impact of Quality Housing and Work Responsibility Act of 1998 on Income Eligibility Requirements for Participants in HOME-Funded Lease-Purchase Programs.	12/1/1998	X	.....
34	HOMEfires Vol. 1 No. 5: Applicability of Section 504 Requirements to the HOME Program.	2/1/1998	X	.....
35	HOMEfires Vol. 1 No. 6: Setting up an Activity and Committing Funds in IDIS under HOME to Purchase, Rehabilitate, and Rent Homes at Different Locations.	2/1/1998	X	.....
36	HOMEfires Vol. 1 No. 7: Lead-Based Paint Requirements	4/1/1998	X	.....
37	HOMEfires Vol. 1 No. 9: HOME and other Federal requirements that Apply to Property Receiving HOME Downpayment Assistance.	8/1/1998	X	.....
38	HOMEfires Vol. 1 No. 1: Using HOME Funds for Housing Counseling	6/1/1997	X	.....
39	HOMEfires Vol. 1 No. 2: Applicability of HOME Program Requirements to Purchasers of 2–4 unit Owner-Occupied Projects.	7/1/1997	X	.....

APPENDIX C—COMMUNITY PLANNING AND DEVELOPMENT—Continued

	Name of document	Date	Arch	Remove
40	HOMEfires Vol. 1, No. 3: Use of HOME Funds to Construct Replacement Units for Demolished Public Housing Owned by a Public PHA.	9/1/1997	X	.....
41	HOMEfires Vol. 1, No. 4: HOME Assistance to a Project That Will Serve Only a Certain Special Needs Group.	10/1/1997	X	.....
42	HOMEfires Vol. 10, No. 1: Guidance on the HOME Maximum Purchase Price or After-Rehabilitation Value Limits.	2/1/2009	X	.....
43	HOMEfires Vol. 10, No. 2: Guidance on the Impact of the Final Rule on ''Refinement of Income and Rent Determination Requirements in Public and Assisted Housing Programs''.	2/1/2009	X	.....
44	HOMEfires Vol. 11 No. 1: Guidance on the Impact of the Violence Against Women Reauthorization Act of 2013 on HOME-Funded Projects.	12/1/2013	X	.....
45	HOMEfires Vol. 13 No. 1: Guidance on How a PJ Can Receive Credit for a HOME Commitment That It Made Prior to Its 24-Month Commitment Deadline but Did Not Set up in IDIS Prior to Its Deadline.	4/1/2016	X	.....
46	HOMEfires Vol. 2 No. 3: Wards of the State and Wards of the Court as Eligible Beneficiaries of HOME-Assisted Transitional Housing.	9/2/1999	X	.....
47	HOMEfires Vol. 2 No. 4: HOME Income, Rent, Per-Unit Subsidy and Purchase Price/After Rehab Value Limits.	9/1/1999	X	.....
48	HOMEfires Vol. 2 No. 5: IDIS HOME Data Cleanup	4/1/2000	X	.....
49	HOMEfires Vol. 2, No. 1: Eligible CHDO Activities in the HOME program	3/1/1999	X	.....
50	HOMEfires Vol. 3 No. 1: Purpose of HOME Written Rehabilitation Standards	1/1/2001	X	.....
51	HOMEfires Vol. 3, No. 2: Frequency and Number of Units Required for On-Site Inspections of HOME-Assisted Rental Housing.	2/1/2001	X	.....
52	HOMEfires Vol. 3, No. 3: Section 8	3/1/2001	X	.....
53	HOMEfires Vol. 3, No. 5: Twelve Month Construction Deadline and Six Month Transfer Deadlines.	4/1/2001	X	.....
54	HOMEfires Vol. 3, No. 8: Impact of Changes to the Section 8 Income Calculation Methodology on Calculating HOME Income Limits.	6/1/2001	X	.....
55	HOMEfires Vol. 3, No. 9: Community Land Trusts (CLTs) and CHDO Certification	10/1/2001	X	.....
56	HOMEfires Vol. 4, No. 1: Frequency of Recertification for CHDOs	4/1/2002	X	.....
57	HOMEfires Vol. 4, No. 3: Amenities that are Suitable to Include in HOME Assisted Projects.	7/1/2002	X	.....
58	HOMEfires Vol. 4, No. 4: Guidance on PJ Responsibilities for Monitoring with Respect to Entities Using Its HOME Funds.	9/1/2002	X	.....
59	HOMEfires Vol. 5, No. 1: Guidance on Allowing Nonprofit Organizations that Are Removed from the FHA Nonprofit Organization Roster to Participate in the HOME Program.	4/1/2003	X	.....
60	HOMEfires Vol. 5, No. 2: Termination of the Affordability Restrictions on a HOME-assisted Project Due to Foreclosure or Transfer in Lieu of Foreclosure.	5/1/2003	X	.....
61	HOMEfires Vol. 5, No. 3: Guidance on the Impact of Amendments to the Regulations for Calculating Income for Disabled Individuals and Households on HOME Income and Rent Calculations.	7/1/2003	X	.....
62	HOMEfires Vol. 6, No. 2: Guidance on PJ Property Standards Inspection Responsibilities.	10/1/2005	X	.....
63	HOMEfires Vol. 7, No. 1: Guidance on PJ Affirmative Marketing Responsibilities	1/1/2006	X	.....
64	HOMEfires Vol. 7, No. 2: Guidance on Property Standards When HOME Funds Are Used for Rehabilitation.	10/1/2006	X	.....
65	HOMEfires Vol. 9, No. 1: Guidance on using HOME to Help Existing Homeowners Who Are Having Difficulty Paying Their Private Mortgages Because of Unfavorable Financing Terms.	1/1/2008	X	.....
66	HOMEfires Vol. 9, No. 2: Guidance on Documentation of Commitments that a PJ Made Before the 24-Month Commitment Deadline for Projects or Agreements not Set Up in IDIS.	3/2/2008	X	.....
67	HOMEfires Vol. 9, No. 3: Guidance on the HOME Maximum Purchase Price or After Rehabilitation Loan Value Limits: Temporary Section 203(b) Limits Authorized by the Economic Stimulus Act of 2008.	3/1/2008	X	.....
68	HOMEfires Vol. 9, No. 4: Guidance on the HOME Maximum HOME Per-Unit Subsidy Limits: Higher Statutory Exceptions to the Maximum Section 221(D)(3) Mortgage Amounts.	8/1/2008	X	.....
69	CPD 09–03 Implementation of the Tax Credit Assistance Program (TCAP)	5/1/2009	X	.....
70	CPD 10–004 Tax Credit Assistance Program (TCAP)—Reallocation of Funds	12/1/2010	X	.....
71	CPD 15–08 TCAP Closeout Procedures Notice	10/1/2015	X	.....
72	Notice CPD 17–05: Guidance for HTF Grantees on FY 2017 HTF Allocation Plans	5/1/2017	X	.....
73	Notice CPD–00–01: Annual Performance Report for HOPE and HOPE 3, and Instructions for Return of Resale Proceeds.	1/19/2001	X	.....
74	Notice CPD–00–02: Commitment and Expenditure Deadline Requirements for the HOME Program.	1/7/2000	X	.....
75	Notice CPD–00–04: HOME- Designating New PJs; Reserving, Obligating, Reallocating Funds; Numbering Partnership Agreements.	5/25/2000	X	.....
76	Notice CPD–00–05: Procedures for Designating Consortia in HOME Investment Partnerships Program.	4/5/2000	X	.....

APPENDIX C—COMMUNITY PLANNING AND DEVELOPMENT—Continued

	Name of document	Date	Arch	Remove
77	Notice CPD–00–06: Procedures for Closing Out HOPE 3 Program Implementation Grants for Returning funds to HUD.	4/26/2000	X	.....
78	Notice CPD–00–08: HOME Match Reductions for Fiscal Distress for FY 1999 and 2000, and Presidentially-Declared Disasters.	6/9/2000	X	.....
79	Notice CPD–00–09: Accessibility Notice—Section 504 of the Rehabilitation Act of 1973 and The Fair Housing Act and Their Applicability to Housing Programs Funded by HOME and CDBG.	12/26/2000	X	.....
80	Notice CPD–00–10: Accessibility for Persons with Disabilities to Non-Housing Programs funded by Community Development Block Grant Funds—Section 504 of the Rehabilitation Act of 1973, the Americans With Disabilities Act, and Architectural Barriers Act.	12/26/2000	X	.....
81	Notice CPD–01–01: Combining Program Funds of the McKinney Act Programs and the HOPWA Program with the HOME Program.	1/17/2001	X	.....
82	Notice CPD–01–02: Annual Performance Report for HOPE and HOPE 3, and instructions for Return of Resale Proceeds.	1/19/2001	X	.....
83	Notice CPD–01–03: Procedures for Closing Out HOPE 3 Program Implementation Grants for Returning Funds to HUD.	4/26/2001	X	.....
84	Notice CPD–01–04: Procedures for Designating Consortia in HOME Investment Partnerships Program.	4/9/2001	X	.....
85	Notice CPD–01–06: HOME Match Reductions for Fiscal Distress for FY 2000 and 2001, and Presidentially-Declared Disasters.	5/14/2001	X	.....
86	Notice CPD–01–07: HOME- Designating New PJs; Reserving, Obligating, Reallocating Funds; Numbering Partnership Agreements.	5/15/2001	X	.....
87	Notice CPD–01–13: Commitment: CHDO Reservation, and Expenditure Deadline Requirements for HOME.	10/12/2001	X	.....
88	Notice CPD–02–01: HOME Match Reductions for Fiscal Distress for FY 2001 and 2002: and Presidentially-Declared Disasters.	4/11/2002	X	.....
89	Notice CPD–02–02: Procedures for Designation of Consortia as a Participating Jurisdiction for the HOME Program.	4/11/2002	X	.....
90	Notice CPD–02–03: Accessibility Notice—Section 504 of the Rehabilitation Act of 1973 and The Fair Housing Act and Their Applicability to Housing Programs Funded by HOME and CDBG.	5/2/2002	X	.....
91	Notice CPD–02–04: Accessibility for Persons with Disabilities to Non-Housing Programs funded by CDBG. Section 504..	5/2/2002	X	.....
92	Notice CPD–03–06: Procedures for Designation of Consortia as a Participating Jurisdiction for the HOME Program.	6/18/2003	X	.....
93	Notice CPD–03–07: HOME Match Reductions for Fiscal Distress for FY 2002 and 2003, and for Major Presidentially-Declared Disasters under the Stafford Act.	7/11/2003	X	.....
94	Notice CPD–03–08: Using HOME Funds in Addressing the Challenges of Homelessness	7/30/2003	X	.....
95	Notice CPD–04–05: Procedures for Designation of Consortia as a Participating Jurisdiction for the HOME program.	6/1/2004	X	.....
96	Notice CPD–04–06: HOME Match Reductions for Fiscal Distress for Presidentially-Declared Disasters under the Stafford Act.	6/4/2004	X	.....
97	Notice CPD–06–01: Admin and Soft Costs, Community Development Expenses under HOME and American Dream Downpayment Initiative.	2/1/2006	X	.....
98	Notice CPD–06–04: Procedures for Designation of Consortia as a Participating Jurisdiction for the HOME program.	4/11/2006	X	.....
99	Notice CPD–06–05: HOME- Designating New PJs; Reserving, Obligating, Reallocating Funds; Numbering Partnership Agreements.	5/4/2006	X	.....
100	Notice CPD–07–05: HOME Match Reductions for Fiscal Distress and for Presidentially-Declared Disasters under the Stafford Act (Supersedes CPD Notice 04–06).	7/11/2007	X	.....
101	Notice CPD–16–07: Guidance for HTF Grantees on FY 2016 HTF Allocation Plans	4/1/2016	X	.....
102	Notice CPD–18–08: Guidance for Grantees on Submitting HTF Allocation Plans	3/1/2018	X	.....
103	Notice CPD–95–04: Commitment Requirements and Deobligation Procedures: HOME Program.	5/3/1995	X	.....
104	Notice CPD–96–02: Procedures for Designating Consortia in HOME Investment Partnerships Program.	3/8/1996	X	.....
105	Notice CPD–96–07: Guidance on Tenant-Based Rental Assistance under the HOME Program.	11/1/1996	X	.....
106	Notice CPD–96–09: Administrative Costs, Project-Related Soft Costs, and CHDO Operating Expenses under the HOME Program.	12/20/1996	X	.....
107	Notice CPD–97–04: HOME Match Reductions for Fiscal Distress for FY 1996 and 1997 and Presidentially-Declared Disasters.	4/17/1997	X	.....
108	Notice CPD–97–05: Procedures for Designating Consortia in HOME Investment Partnerships Program.	4/25/1997	X	.....
109	Notice CPD–97–07: Commitment and Expenditure Deadline Requirements for the HOME Program.	5/19/1997	X	.....
110	Notice CPD–97–09: HOME Program Income, Recaptured Funds, Repayments and CHDO Proceeds.	9/12/1997	X	.....
111	Notice CPD–97–11: Guidance on CHDOs under the HOME Program	10/8/1997	X	.....
112	Notice CPD–97–12: Annual Performance Report for HOPE and HOPE 3	10/10/1997	X	.....
113	Notice CPD–97–13: Procedures for Closing Out HOPE 3 Program Implementation Grants.	11/19/1997	X	.....

APPENDIX C—COMMUNITY PLANNING AND DEVELOPMENT—Continued

	Name of document	Date	Arch	Remove
114	Notice CPD–98–01: Layering Guidance for HOME Participating Jurisdictions When Combining HOME Funds with Other Governmental Subsidies.	1/22/1998	X	.....
115	Notice CPD–98–02: Allocating Costs and Identifying HOME-assisted Units in Multi-Unit Projects.	3/18/1998	X	.....
116	Notice CPD–98–06-Rev: Commitment and Expenditure Deadline Requirements for the HOME Program.	5/5/1998	X	.....
117	Notice CPD–98–07: Procedures for Designating Consortia in HOME Investment Partnerships Program.	5/29/1998	X	.....
118	Notice CPD–98–08: HOME Match Reductions for Fiscal Distress for FY 1997 and 1998, and Presidentially-Declared Disasters.	6/11/1998	X	.....
119	Notice CPD–98–11: Annual Performance Report for HOPE and HOPE 3, and instructions for Return of Resale Proceeds.	10/14/1998	X	.....
120	Notice CPD–99–02: Procedures for Closing Out HOPE 3 Program Implementation Grants for Returning funds to HUD.	3/23/1999	X	.....
121	Notice CPD–99–04: Commitment and Expenditure Deadline Requirements for the HOME Program.	4/16/1999	X	.....
122	Notice CPD–99–05: Procedures for Designating Consortia in HOME Investment Partnerships Program.	5/18/1999	X	.....
123	Notice CPD–99–06: HOME Match Reductions for Fiscal Distress for FY 1998 and 1999, and Presidentially-Declared Disasters.	7/28/1999	X	.....
124	CPD Memo: System and Regulatory Changes to Eliminate First-In-First-Out Accounting in IDIS.	5/9/2014	X	.....
125	CPD Memo: Repayment of HOME Funds Used for Ineligible Activities or Ineligible Costs and Return of HOME Funds to the Treasury Account.	4/5/2011	X	.....
126	HOME IDIS Exercise Manual for PJs	7/1/2010	X	.....
127	HOME IDIS Homebuyer Set Up And Completion Form	8/1/2006	X	.....
128	2017 Housing Trust Fund Allocation Plan Sample Form	6/1/2017	X	.....
129	2016 Housing Trust Fund Allocation Plan Sample Form	5/1/2016	X	.....
130	2016 HTF Allocation Plans	4/1/2016	X	.....
131	HTF e-Con Planning Suite Screens Office Hours	9/1/2017	X	.....
132	TCAP Program-Level Plan	4/1/2017	X	.....
133	Fed Reporting Q&As	4/1/2017	X	.....
134	Davis-Bacon Prevailing Wage Requirements Q&As	4/1/2017	X	.....
135	Part 87—Lobbying Certifications	4/1/2017	X	.....
136	Lead-based Paint	4/1/2017	X	.....
137	National Environmental Policy Act (NEPA) & Related Laws	4/1/2017	X	.....
138	Program Income	4/1/2017	X	.....
139	TCAP Questions and Answers: Section 504 of the Rehabilitation Act of 1973	4/1/2017	X	.....
140	Technical Assistance	4/1/2017	X	.....
141	Uniform Relocation Act Requirements	4/1/2017	X	.....
142	Grant Agreement Guidance	4/1/2017	X	.....
143	Written Agreement Requirements	4/1/2017	X	.....
144	*FederalReporting.gov* Tipsheet	4/1/2017	X	.....
145	Job Count Guide	4/1/2017	X	.....
146	Fees and Asset Management Guide	4/1/2017	X	.....
147	Projects with Existing Environmental Review Guide	4/1/2017	X	.....
148	Lead-based Paint Interpretive Guide	4/1/2017	X	.....
149	TCAP Broadcast Powerpoint Presentation	4/1/2017	X	.....
150	TCAP Section 3 Waiver	4/1/2017	X	.....
151	TCAP URA Waiver	4/1/2017	X	.....
152	HOME Final Rule: Commitment and Expenditure Requirements Webcast	10/24/2013	X	.....
153	HOME Final Rule: Timeliness Webcast Transcript	10/24/2013	X	.....
154	CHDO Set-Aside Reservation & Expenditure Deadlines Webinar	5/7/2015	X	.....
155	CHDO Set-Aside Reservation & Expenditure Deadlines PowerPoint	5/7/2015	X	.....
156	Transcript of HOME Program Webinar CHDO Set-Aside Reservation and Expenditure Deadlines.	5/7/2015	X	.....
157	Overview of the HOME FY2012 Appropriations Law Requirements Webinar	6/1/2012	X	.....
158	Overview of the HOME FY2012 Appropriations Law Requirements PowerPoint	6/1/2012	X	.....
159	Consolidated and Further Continuing Appropriations Act of 2012: Overview of HOME Requirements—Webinar Transcript.	6/1/2012	X	.....
160	HOME FY2012 Appropriations Law Requirements—Underwriting and Developer Capacity for Homebuyer Projects Webinar.	6/14/2012	X	.....
161	HOME FY2012 Appropriations Law Requirements—Underwriting and Developer Capacity for Homebuyer Projects Webinar Transcript.	6/15/2012	X	.....
162	HOME FY2012 Appropriations Law Requirements—Underwriting and Developer Capacity for Homebuyer Projects Webinar PowerPoint.	6/16/2012	X	.....
163	HOME FY2012 Appropriations Law Requirements—Market Analysis Webinar	6/11/2012	X	.....
164	HOME FY2012 Appropriations Law Requirements—Market Analysis Webinar PowerPoint.	6/11/2012	X	.....
165	HOME FY2012 Appropriations Law Requirements—Market Analysis Webinar Transcript	6/11/2012	X	.....
166	HOME FY2012 Appropriations Law Requirements—Deadline for Sale of Homebuyer Units Webinar.	6/18/2012	X	.....

APPENDIX C—COMMUNITY PLANNING AND DEVELOPMENT—Continued

	Name of document	Date	Arch	Remove
167	HOME FY2012 Appropriations Law Requirements—Deadline for Sale of Homebuyer Units and Conversion to Rental Webinar Additional Resources.	6/18/2012	X	.....
168	HOME FY2012 Appropriations Law Requirements—Deadline for Sale of Homebuyer Units and Conversion to Rental Webinar PowerPoint.	6/18/2012	X	.....
169	HOME FY2012 Appropriations Law Requirements—Deadline for Sale of Homebuyer Units and Conversion to Rental Webinar Transcript.	6/18/2012	X	.....
170	HOME FY2012 Appropriations Law Requirements—Underwriting and Developer Capacity for Rental Projects Webinar PowerPoint.	6/28/2012	X	.....
171	HOME FY2012 Appropriations Law Requirements—Underwriting and Developer Capacity for Rental Projects Webinar.	6/28/2012	X	.....
172	HOME FY2012 Appropriations Law Requirements—Underwriting and Developer Capacity for Rental Projects Webinar Transcript.	6/28/2012	X	.....
173	HOME FY2012 Appropriations Law Requirements—For CHDOs—Understanding the CDHO Development Capacity Requirement Webinar.	7/12/2012	X	.....
174	CHDO Capacity Checklist Guide	7/12/2012	X	.....
175	CHDO Capacity Checklist Tool	7/12/2012	X	.....
176	HOME FY2012 Appropriations Law Requirements—For CHDOs—Understanding the CDHO Development Capacity Requirement Webinar PowerPoint.	7/12/2012	X	.....
177	HOME FY2012 Appropriations Law Requirements—For CHDOs—Understanding the CDHO Development Capacity Requirement Webinar Transcript.	7/12/2012	X	.....
178	Long Term Affordability Using NSP and HOME Webinar	10/6/2011	X	.....
179	Long Term Affordability Using NSP and HOME Webinar PowerPoint	10/6/2011	X	.....
180	Long Term Affordability Using NSP and HOME Webinar Transcript	10/6/2011	X	.....
181	HOME Proposed Rule Webinar	12/16/2011	X	.....
182	HOME Proposed Rule Webinar PowerPoint	12/16/2011	X	.....
183	HOME Proposed Rule Webinar Transcript	12/16/2011	X	.....
184	Ten Q&As on Section 106 Compliance	3/1/2006	X	.....
185	Environmental Review FAQs: Hurricane Sandy	5/1/2014	X	.....
186	WSRA Section 7(a) Process Flowchart	1/1/2013	X	.....
187	Choosing an Environmentally Safe Site	9/1/2006	X	.....
188	Exemptions for Disaster and Imminent Threats	5/16/2009	X	.....
189	Field Environmental Review Processing for HUD Colonias Initiative Grants	1/27/2000	X	.....
190	Modified Environmental Processing for SHOP	5/21/2001	X	.....
191	Modified Environmental Processing for Self-Help Homeownership Opportunity Program (SHOP) Fiscal Year 2001 Legislative Change.	5/21/2001	X	.....
192	Environmental Review and the HOME Investment Partnerships Program	7/17/2001	X	.....
193	Cooperating Agency Agreements for Implementing Procedural Requirements of NEPA	8/22/2002	X	.....
194	Waiving Statutory Environmental Review Requirements for the Indian Housing Block Grant Program for Tribes that Have Assumed Environmental Review Responsibilities under 24 CFR part 58.	8/10/2004	X	.....
195	Waiving Statutory Environmental Review Requirements for the Indian Housing Block Grant Program for Tribes that Have Assumed Environmental Review Responsibilities under 24 CFR part 58.	8/10/2005	X	.....
196	Field Environmental Review Processing for RHED Grants	8/30/2005	X	.....
197	Field Environmental Review Processing for RHED Grants	10/12/2006	X	.....
198	Environmental Review Processing for Emergency Solutions Grants (ESG) Programs FY2012.	6/15/2012	X	.....
199	Field Environmental Processing for Loan Guarantee Recovery Fund	1996	X	.....
200	Environmental Guide for SHOP	2/20/1997	X	.....
201	Environmental Guide for SHOP	2/20/1998	X	.....
202	Modified Environmental Processing for SHOP	10/14/1998	X	.....
203	Field Environmental Review Processing for HUD Colonias Initiative Grants	1/27/1999	X	.....
204	Modified Environmental Processing for SHOP	10/14/1999	X	.....
205	Field Environmental Review Processing for the HUD Urban Empowerment Zones (EZ) Program (Round II).	9/20/1999	X	.....
206	HUD Environmental Justice Strategy	11/1/2016	X	.....
207	2012–2015 Environmental Justice Strategy	3/30/2012	X	.....
208	Coastal Barrier Resources Act: Guidelines for Compliance	2008	X	.....
209	Overview of Exempt Activities and Categorically Excluded Activities Not Subject to § 58.5 Related Laws and Authorities.	6/1/2013	X	.....
210	Fact Sheet Using CDBG Funds for Disaster Recovery	1998	X	.....
211	Pt. 51 Guide to HUD Environmental Criteria and Standards contained in 24 CFR 51	8/1/1984	X	.....

APPENDIX D—DAVIS–BACON AND LABOR STANDARDS

	Name of document	Date	Arch	Remove
1	SF 308 Request For Wage Determination And Response To Request	05/1985	X	.....
2	The Davis Bacon Act—40 U.S.C. 3141 *et seq*	4/2009	X	.....
3	Title 29 CFR parts 1, 3, 5, 6 and 7—Department of Labor Regulations	12/1/2012	X	.....
4	WD–10—Report of Construction Contractor's Wage Rates	5/1/2014	X	.....

APPENDIX D—DAVIS–BACON AND LABOR STANDARDS—Continued

	Name of document	Date	Arch	Remove
5	WH–347—Payroll	12/2008	X	
6	Copeland Anti-Kickback Act—40 U.S.C 3145	12/1/2012	X	
7	WH–1321 SPA Davis-Bacon Poster in Spanish	10/2017	X	
8	WH–1321 Davis-Bacon Poster in English	10/2017	X	
9	HUD's On the Mark #10: What's new about Davis-Bacon certification forms? WH–348	12/1/2012	X	
10	HUD's On the Mark #9: What's new about contractor and	12/1/2012	X	
11	Field Operations Handbook	5/1/2012	X	
12	HUD Handbook 1344.1, Federal Labor Standards Compliance in Housing and Community Development Programs.	2/1/2012	X	
13	WH Publication 1318 Fair Labor Standards Act of 1938, as amended	5/1/2011	X	
14	HUD Form 4010 Federal Labor Standards Provision	6/1/2009	X	
15	HUD Form 4734 Labor Standards Deposit Account Voucher	9/1/2008	X	
16	HUD Form 11–SP—Spanish Version: Record of Employee Review	8/1/2004	X	
17	HUD form 4730–E Online Employee Questionnaire	6/1/2004	X	
18	WH1432 Contract Work Hours and Safety Standards, as amended	Not dated	X	
19	On the Mark! Publication Series	6/1/1996	X	
20	HUD form 4230A Report of Additional Classification	8/1/2003	X	
21	HUD Form 4730—Federal Labor Standards Questionnaire	1/1/2019	X	
22	HUD Form 4734—Labor Standards Deposit Account Voucher	9/1/2008	X	
23	HUD Form 4733 Wire Transfer instructions	7/1/2006	X	
24	HUD Form 4710 Semi-Annual Enforcement Report	11/1/2004	X	
25	HUD Form 5370 General contract provisions	11/1/2006	X	
26	HUD Form 5370–EZ General Contracts provisions for small contractors	10/1/2006	X	
27	HUD Form 5370 C General conditions nonconstruction contracts	10/1/2006	X	
28	HUD Form 4751 Maintenance wage rate survey	1/1/2007	X	
29	HUD Form 4750 Maintenance wage rate recommendation	1/1/2007	X	
30	HUD Form 4752 Maintenance wage rate survey summary sheet	1/1/2007	X	
31	HUD Form 4731 Compliant Intake Form	6/1/2004	X	
32	HUD Form 4730 in Spanish, Federal Labor Standards Questionnaire	6/1/2004	X	
33	PHA On-Site Monitoring Instructions	No Date	X	
34	Waiving statutory environmental review requirements for the Indian Housing Block Grant Program for Tribes that Have Assumed Environmental Review Responsibilities under 24 CFR part 58.	8/10/2006	X	

APPENDIX E—HOUSING/FHA MORTGAGEE LETTERS

	Name of document	Date	Arch	Remove
1	Debenture Interest Rates	7/1/1987	X	
2	Debenture Interest Rates	12/31/1987	X	
3	Debenture Interest Rates	7/29/1988	X	
4	Debenture Interest Rates	2/1/1989	X	
5	Debenture Interest Rates	7/24/1989	X	
6	Debenture Interest Rates	1/25/1990	X	
7	Debenture Interest Rates	7/20/1992	X	
8	Debenture Interest Rates	1/27/1992	X	
9	Debenture Interest Rates	7/27/1993	X	
10	Debenture Interest Rates	1/19/1993	X	
11	Debenture Interest Rates	1/28/1994	X	
12	Debenture Interest Rates	7/13/1995	X	
13	Collection of Interest of One-Time Mortgage Insurance Premium Payments that were made late INSURANCE.	8/12/1991	X	
14	Multifamily Mortgage Insurance Premiums	5/28/1991	X	
15	Lockbox Closes for Section 530 and Risk-Based Monthly—Premiums	4/17/1996	X	
16	Announcement of Reconciliation Group for Risk-Based Premiums	8/7/1991	X	
17	Optional use of Private Courier Services for Remittance of Mortgage Insurance Premiums (MIP).	5/7/1984	X	
18	Updates via CLAS	6/11/1996	X	
19	Change in Maximum Interest Rates	1/29/1988	X	
20	Change in Maximum Interest Rates	9/8/1987	X	
21	Change in Maximum Interest Rates	5/8/1987	X	
22	Change in Maximum Interest Rates	9/8/1987	X	
23	Change in Maximum Interest Rates	5/8/1987	X	
24	Change in Maximum Interest Rates	1/29/1988	X	
25	Change in Maximum Interest Rates	7/17/1989	X	
26	Change in Maximum Interest Rates	6/5/1989	X	
27	Change in Maximum Interest Rates	12/16/1988	X	
28	Headquarters Review of Certain Applications for Section 232 Mortgage Insurance	11/6/2000	X	
29	IRS Form 5405	No Date	X	
30	Extension of Initial Disaster Foreclosure Moratorium for Properties in Specified Areas Impacted by Hurricanes Harvey, Irma, and Maria.	10/20/2017	X	

APPENDIX E—HOUSING/FHA MORTGAGEE LETTERS—Continued

	Name of document	Date	Arch	Remove
31	Extension of Disaster Foreclosure Moratoriums for Specified Areas Impacted by Hurricane Maria.	5/16/2018	X	.....
32	Extension of Disaster Foreclosure Moratoriums for Specified Areas Impacted by Hurricane Maria in Puerto Rico and the U.S. Virgin Islands.	5/16/2018	X	.....
33	2019 Nationwide Forward Mortgage Limits	12/14/2018	X	.....
34	2019 Nationwide Home Equity Conversion Mortgage (HECM) Limits	12/14/2018	X	.....
35	Downpayment Assistance and Operating in a Governmental Capacity	4/18/2019	X	.....
36	Extension of the Effective Date of Mortgagee Letter 2019–06, Downpayment Assistance and Operating in a Governmental Capacity.	4/25/2019	X	.....
37	Construction to Permanent and Building on Own Land Programs	5/16/2019	X	.....
38	Suspension of the Effective Date of Mortgagee Letter 2019–06, Downpayment Assistance and Operating in a Government Capacity.	7/23/2019	X	.....
39	Rescission of Mortgagee Letters 2019–06, Downpayment Assistance and Operating in a Governmental Capacity; 2019–07, Extension of the Effective Date of Mortgagee Letter 2019–06, Downpayment Assistance and Operating in a Governmental Capacity; and 2019–10, Suspension of the Effective Date of Mortgagee Letter 2019–06, Downpayment Assistance and Operating in a Governmental Capacity.	8/13/2019	X	.....
40	Establishment of the Federal Housing Administration (FHA) Inspector Roster • Attachment.	8/2/2004	X	.....
41	Eligibility of Mortgages on Hawaiian Home Lands Insured Under Section 247	11/1/2004	X	.....
42	Revised Borrower's Closing Costs Guidelines	1/27/2006	X	.....
43	Home Equity Conversion Mortgage (HECM) for Purchase Program	10/20/2008	X	.....
44	HECM Mortgage Limits—Effective Immediately	11/6/2008	X	.....
45	Loan Limit Increases for FHA • Attachment I—Counties at the Ceiling. • Attachment II—Counties Between the Floor and Ceiling.	2/24/2009	X	.....
46	Online Versions of Handbooks 4155.1, Mortgage Credit Analysis for Mortgage Insurance; and 4155.2, Lenders' Guide to Single Family Mortgage Insurance Processing.	4/9/2009	X	.....
47	Home Equity Conversion Mortgage (HECM)—Principal Limit Factors	9/23/2009	X	.....
48	Introduction of HUD's Web-Based Training Application: Electronic Class (EClass) on Loss Mitigation and Servicing System.	10/27/2009	X	.....
49	Adoption of the Appraisal Update and/or Completion Report (Fannie Mae Form 1004D/Freddie Mac Form 442/March 2005).	12/7/2009	X	.....
50	Announcement of the FHA Nonprofit Data Management System	1/28/2010	X	.....
51	Availability of Treasury Success Payments for FHA–HAMP Modifications	3/26/2010	X	.....
52	Home Equity Conversion Mortgage (HECM) Program Submission of Case Binder Documents. • Attachment—Home Equity Conversion Mortgage Required Documents for Endorsement.	7/20/2010	X	.....
53	Home Equity Conversion Mortgage Program—Introducing HECM Saver; Mortgage Insurance Premiums and Principal Limit Factor Changes for HECM Standard.	9/21/2010	X	.....
54	2011 FHA Maximum Loan Limits • Attachment 1 (Areas at Ceiling and Above). • Attachment 2 (Areas Between Floor and Ceiling).	12/1/2010	X	.....
55	Federal Housing Administration Maximum Loan Limits, Effective Period: January 1, 2013, through December 31, 2013.	12/6/2012	X	.....
56	Home Equity Conversion Mortgage Program—Consolidation of Pricing Options and Principal Limit Factors for Fixed Interest Rate Mortgages Mortgagee Letters.	1/30/2013	X	.....
57	Home Equity Conversion Mortgage (HECM) Financial Assessment and Property Charge Guide. • Attachment (1/13/2014).	9/3/2013	X	.....
58	Home Equity Conversion Mortgage Program's Mandatory Obligations, Life Expectancy Set-Aside Calculation, and Purchase Transactions.	9/25/2013	X	.....
59	Eligible Properties in Presidentially Declared Major Disaster Area Super Storm Sandy for 203(k) insured mortgages.	9/27/2013	X	.....
60	Delay in Effective Date for Home Equity Conversion Mortgage (HECM) Financial Assessment Requirements and Funding Requirements for the Payment of Property Charges.	12/20/2013	X	.....
61	Voluntary Termination of FHA Mortgage Insurance	7/3/2014	X	.....
62	Update of Preservation and Protection (P&P) Requirements and Cost Reimbursement Procedures for Title II Forward Mortgages and Home Equity Conversion Mortgages (HECMS).	2/5/2016	X	.....
63	Revised HUD 92900–A HUD/VA Addendum to Uniform Residential Loan Application	3/15/2016	X	.....
64	Property Assessed Clean Energy (PACE)*(Superseded in part by HUD Handbook 4000.1).	7/19/2016	X	.....
65	2017 Nationwide Home Equity Conversion Mortgage (HECM) Limits	12/1/2016	X	.....
66	Change in Method of Payment of Mortgage Insurance Premiums With HUD Debentures	12/23/1980	X	.....
67	Microfilming, Retention, and Disposition of Documents in Single Family HUD-Insured Mortgage Files.	4/9/1981	X	.....
68	HUD-Approved Forms	6/16/1981	X	.....
69	Property Inspection Fees	6/16/1981	X	.....
70	The Proper Utilization of Escrow Accounts—Clarifications	8/25/1981	X	.....

APPENDIX E—HOUSING/FHA MORTGAGEE LETTERS—Continued

	Name of document	Date	Arch	Remove
71	Redemption of Debentures in Exchange for the Payment of Mortgage Insurance Premiums.	12/22/1981	X	.....
72	Mortgage Record Change Key Punch Instructions	2/20/1981	X	.....
73	Initiatives Designed to Provide Economic Stimulus to the Housing Industry	6/22/1982	X	.....
74	Microfilming, Retention, and Disposition of Documents of Single Family HUD-Insured Mortgage.	7/9/1982	X	.....
75	Refinancing existing HUD-insured mortgages for minimal risk applications	10/28/1981	X	.....
76	Revision to Mortgagee Remittance Requirements for Single Family Mortgage Insurance Premiums.	7/19/1982	X	.....
77	Mortgagee Letter 81–23, Escrows Established to Reduce Monthly Interest Charges to the Buyer.	5/6/1982	X	.....
78	One-Time Mortgage Insurance Premium—Mortgage Modifications	12/7/1983	X	.....
79	Withholding of Interest on HUD Debentures	3/25/1983	X	.....
80	Computerized Processing of Mortgage Credit Data—Reimbursement of Real Estate Brokers.	4/14/1983	X	.....
81	Single Family Claims for Insurance Benefits	4/4/1984	X	.....
82	Reporting Defaulted Mortgagors to Credit Bureaus	4/25/1984	X	.....
83	Post Office Box Number for Submission of Claims for Single Family Mortgage Insurance Benefits.	8/22/1984	X	.....
84	Capitalization Accounting	1/30/1984	X	.....
85	Adjustable Rate Mortgages (ARM) Mortgage Servicing Procedures	12/17/1984	X	.....
86	Single Family Condominium Provisions of the Housing and Urban-Rural Recovery Act of 1983.	3/27/1984	X	.....
87	Single Family Origination: Lower Down Payment for Properties Under $50,000	5/10/1985	X	.....
88	High Risk Mortgages—Investor Refinances	5/16/1985	X	.....
89	New Single Family Claims Payment System Form HUD–27011, Single Family Application for Insurance Benefits—Title II Mortgages.	9/10/1985	X	.....
90	Ferrell v. Pierce, 73 C 334, N.D. ILL. Assignment Reprocessing	9/13/1985	X	.....
91	Equity Skimming	9/16/1985	X	.....
92	Implementation of New Single Family Claims Payment System (Title II mortgages)	1/30/1985	X	.....
93	Growing Equity Mortgages (GEMs)	3/1/1985	X	.....
94	Mortgagee Letter 86–10, Single Family Production, Requiring Signatures on HUD–1 Settlement Statement.	6/3/1986	X	.....
95	Tax Bills on Single Family Properties and Mortgages Assigned to the Department	7/31/1986	X	.....
96	Changes to Single Family Programs	8/8/1986	X	.....
97	Automatic assignment of mortgages pursuant to Section 221(g)(4) of the National Housing Act Single Family.	9/26/1986	X	.....
98	Single Family Production Processing of Refinance Transactions	1/28/1986	X	.....
99	Single Family Production—Investor Transactions	1/29/1986	X	.....
100	Single Family Development—Streamlined Refund Process for Refinance Transactions	3/24/1986	X	.....
101	Claims without Conveyance of Title (CWCOT); Bidding Requirements for Foreclosure Sales.	6/23/1987	X	.....
102	Replacement Mortgage Insurance Certificates	7/31/1987	X	.....
103	Refinance Transactions—Additional Instructions and Clarifications	8/31/1987	X	.....
104	Fraud Alert—Fictitious Notices of Mortgage Transfer or Sale	No Date	X	.....
105	Corrections Needed for Errors in Reporting on the 90 or More Days Delinquent Loan Report, Single Family Default Monitoring System (SFDMS).	7/27/1987	X	.....
106	Single Family Processing Procedures—Shared Equity Identity of Interest Uniform Residential Appraisal Report (URAR) Sales Data Prohibited Kickback Payments Mortgagor Borrowing Funds for the Required Investment.	10/19/1987	X	.....
107	Change in Maximum Interest Rates	10/20/1987	X	.....
108	Single Family Production—Revisions to Interest Buydown Policy	10/22/1987	X	.....
109	Homeowner's Fact Sheet-One-time Mortgage Insurance Premium (MIP) Refunds and Distributive Shares.	10/28/1987	X	.....
110	Single Family Development—The Use of a Real Estate Schedule in Investor Transactions.	11/9/1987	X	.....
111	Changes to the Term of Conditional Commitments Issued for Proposed Construction	11/30/1987	X	.....
112	Additional Processing instructions for Determining Creditworthiness of Assuming Mortgagors—Mortgagee Letter 86–15.	1/12/1987	X	.....
113	Single Family Development—Streamlined Refund Process for Refinance Transactions	2/2/1987	X	.....
114	Mortgage Insurance on Indian Reservations and other Restricted Lands	4/6/1988	X	.....
115	Occupied Conveyance of One-to Four-Family Properties: Final Rule	4/27/1988	X	.....
116	Single Family Production—Requests to Increase the Single Family Maximum Mortgage Limits.	5/17/1988	X	.....
117	All Approved Mortgagees Streamline Refinance, Allowable Fees	5/18/1988	X	.....
118	Single Family Production—Including Home Inspection Fees in Closing Costs	5/19/1988	X	.....
119	Change in Maximum Interest Rates	5/20/1988	X	.....
120	Deeds-in-lieu of Foreclosure	No Date	X	.....
121	Shared Equity Program Purchase Transactions	6/27/1988	X	.....
122	Administration of the Section 235 Program: Common Servicing Errors, Clarification of Policies and Procedures and Recent Legislative Changes.	7/14/1988	X	.....

APPENDIX E—HOUSING/FHA MORTGAGEE LETTERS—Continued

	Name of document	Date	Arch	Remove
123	Disclosure Requirements Concerning the Origination of Adjustable Rate Mortgages (ARMs).	7/21/1988	X	.....
124	Credit Alert Interactive Voice Response (CAIVR) System Additional Processing Instructions.	8/1/1988	X	.....
125	Implementation of the Housing and Community Development Act of 1987—Single Family Provisions.	2/5/1988	X	.....
126	Single Family Loan Production—Revised Form HUD 92900, Application for HUD/FHA Insured Mortgage.	11/7/1988	X	.....
127	Lender Foreclosure Delays	No Date	X	.....
128	Change in Maximum Interest Rates	10/31/1988	X	.....
129	Purchase of Mortgages Prior to Issuance of MICs	11/3/1988	X	.....
130	Obtaining Duplicate Mortgage Insurance Certificates (MICs)	11/9/1988	X	.....
131	Single Family Production—Recap of HUD's Temporary Interest Buydown Policy	12/1/1988	X	.....
132	Home Equity Conversion Mortgage Insurance Demonstration-Procedures for Applying for Reservations of Insurance Authority.	12/22/1988	X	.....
133	Revised Credit Alert Interactive Voice Response System (CAIVRS)—Combining Title I and Title II Records Additional Processing Instructions.	2/24/1988	X	.....
134	Single Family Development—Certifications of Mechanical Equipment, Roofing or Structural Components by Qualified Home Inspectors (Existing Properties).	2/29/1988	X	.....
135	Claims Without Conveyance of Title (CWCOT) Implementation Corrections, Additions and Clarifications.	2/29/1988	X	.....
136	Clarification of Correct Index to Use for Interest Rate Adjustments of FHA-Insured Adjustable Rate Mortgages (ARMS).	3/1/1988	X	.....
137	Standards for Residential Mortgage Credit Reports	3/30/1988	X	.....
138	Establishment of Allowable Fees for Assumptions (All Single Family Programs)	4/6/1988	X	.....
139	HUD Initiatives to Counter Mortgagor Abuse	2/2/1989	X	.....
140	Clarification of Residential Mortgage Credit Report Standards	3/29/1989	X	.....
141	Implementation of Deficiency Judgment Activities	5/3/1989	X	.....
142	Title Insurance Coverage for Single Family Conveyed Properties	5/11/1989	X	.....
143	Providing Housing Through Local Government Participation	5/22/1989	X	.....
144	Pre-Foreclosure Reviews and Mortgagee Servicing	6/15/1989	X	.....
145	Transfer of Loan Management and Property Disposition Responsibilities	6/23/1989	X	.....
146	Single Family Subdivision Processing Requirements—VA/CRVs and MCRVs	1/4/1989	X	.....
147	Single Family Loan Production—Modifications to Mortgage Credit underwriting	6/27/1989	X	.....
148	Single Family Loan Production—Requirements for Single Family Mortgage Instruments	10/11/1989	X	.....
149	Insurance of Adjustable Rate Mortgages on Single Family Properties Section 251 of the National Housing Act.	9/29/1989	X	.....
150	Single Family Loan Production—Use of Effective Gross Income To Calculate Borrower Qualifying Ratios and Changes to Underwriting Investor Applications.	10/20/1989	X	.....
151	Servicing FHA-Insured Loans Affected by Hurricane Hugo (September 1989)	11/3/1989	X	.....
152	Mortgagee Requirements to Process and Execute A Release From Personal Liability on a Mortgage Note for ANY HUD-Insured One-to-Four Family Mortgage.	11/7/1989	X	.....
153	Servicing FHA-Insured Mortgages Affected by the Earthquake (October 17, 1989)	11/9/1989	X	.....
154	Single Family Default Monitoring System (SFDMS)—Addition of Status Codes	12/20/1989	X	.....
155	Checklist of Housing Mortgagee Letters	1/18/1989	X	.....
156	Single Family Default Monitoring System (SFDMS) Reporting Errors and Problems	12/20/1989	X	.....
157	Single Family Loan Production—Implementation of Certain Provisions of the "Department of Housing and Urban Development Reform Act of 1989".	12/26/1989	X	.....
158	Additional Requirements of Section 143 of the Internal Revenue Code of 1986 Which Affect FHA Assumption Policy.	12/27/1988	X	.....
159	Attachment to Mortgagee Letter 89–4	1/1/1989	X	.....
160	HUD-Approved Housing Counseling Agencies	1/9/1989	X	.....
161	Revised Requirements—Implementation of the Housing and Community Development Act of 1987—Single Family Provisions—(ML 88–2); Assumption Processing—Time Frame.	1/19/1989	X	.....
162	Revision to Mortgagee Letter 88–2, Assumption Policy	1/19/1989	X	.....
163	Growing Equity Mortgage Program	1/19/1989	X	.....
164	Claims Without Conveyance of Title (CWCOT)—First Year End Concerns	1/30/1989	X	.....
165	Revised Single Family Subdivision Processing Requirements—VA/CRVs and MCRVs	2/1/1989	X	.....
166	Checklist of Housing Mortgagee Letters	1/18/1989	X	.....
167	Single Family Default Monitoring System (SFDMS)	7/27/1990	X	.....
168	Update of Foreclosure Time Frames	8/14/1990	X	.....
169	Single Family Default Monitoring System (SFDMS) Change to Instructions for Completing Form HUD–92068–A.	8/28/1990	X	.....
170	Implementation of New Foreclosure Time Frames	2/14/1990	X	.....
171	Change in Maximum Interest Rates	2/22/1990	X	.....
172	Changes to HUD's Occupied Conveyance Procedures	2/11/1991	X	.....
173	Allowable Attorney Fees and Foreclosure and Acquisition Costs on FHA Single Family Claims.	No Date	X	.....
174	Claims Without Conveyance of Title (CWCOT)—Deficiency Judgment Bidding and Reimbursement Procedures.	3/11/1991	X	.....
175	Soldiers' and Sailors' Civil Relief Act of 1940 Section 235 Factor Tables	4/23/1991	X	.....

APPENDIX E—HOUSING/FHA MORTGAGEE LETTERS—Continued

	Name of document	Date	Arch	Remove
176	A.—Procedures for Reconveyance B.—Procedures for Reimbursement to Lenders on Uninsured Cases.	4/25/1991	X	.....
177	Announcement Of HUD's Pre-Foreclosure Sale Program Demonstration	9/25/1991	X	.....
178	Occupied Conveyance of One-to-Four-Family Properties	11/1/1991	X	.....
179	Effect of Soldiers' and Sailors' Civil Relief Act of 1940 on FHA-insured Mortgages	1/30/1991	X	.....
180	Expansion Of HUD's Pre-Foreclosure Sale (PFS) Program Demons	1/6/1993	X	.....
181	Servicing FHA-Insured Mortgages Affected by the Flood of 1993	7/15/1993	X	.....
182	Single Family Default Monitoring System: Introduction of Revised Form HUD–92068A; and Recent Policy Changes.	8/11/1993	X	.....
183	Allowable Attorney's and Trustee's Fees Mortgagees May Charge to Mortgagors	9/28/1993	X	.....
184	First Legal Action to Commence Foreclosure in the State of Connecticut	10/21/1993	X	.....
185	Single Family Loan Production—Compliance with the 1992 Model Energy Code—Additional Instructions and Follow-Up to Mortgagee Letter 93–26—(Superseded in part by HUD Handbook 4000.1).	10/22/1993	X	.....
186	Single Family Loan Servicing Fees and Charges After Endorsement—Charges to mortgagors.	10/28/1993	X	.....
187	Referral Fees Charged for Reverse Mortgages	4/11/1997	X	.....
188	Ending Referral Fees Charged by Companies for HUD Reverse Mortgages	4/11/1997	X	.....
189	Document 98–28 Attachment	10/21/1998	X	.....
190	Single Family Loan Production: Clarifications Regarding the Homebuyer Protection Plan	12/31/1997	X	.....
191	Home Equity Conversion Mortgage Calculation Software	12/10/1999	X	.....
192	Single Family Loan Production—Increase in FHA Maximum Mortgage Limits	10/21/1998	X	.....
193	Adjustable Rate Mortgages—Addition of LIBOR Index	10/12/2007	X	.....
194	Home Equity Conversion Mortgage Program—Non FHA-Approved Mortgage Brokers	5/16/2008	X	.....
195	Home Equity Conversion Mortgages—Fixed Interest Rate	3/28/2008	X	.....
196	Home Equity Conversion Mortgages (HECM); Signature Reduction, Clarification of Required FHA Documents and Revised Instruction to "Residential Loan Application for Reverse Mortgages"—Single Family.	9/29/2004	X	.....
197	Home Equity Conversion Mortgage (HECM) Program—Delayed Effective Date for Mortgagee Letter 2004–25 Instructions.	7/22/2004	X	.....
198	Refinancing Existing Home Equity Conversion Mortgages (HECM) and Revision to the HECM Calculation Software—Single Family.	4/23/2004	X	.....
199	Home Equity Conversion Mortgage (HECM)—Interest Rate Lock-Ins	9/24/2003	X	.....
200	Home Equity Conversion Mortgage Program (HECM) Servicing and Claim Issues	6/25/2001	X	.....
201	Home Equity Conversion Mortgages (HECMs) in Texas (Supplement to Mortgagee Letter 00–09 dated March 8, 2000) and instructions on using HECM Mortgage Calculation Software (Supplement to Mortgagee Letter 99–36, dated December 10, 1999).	8/30/2000	X	.....
202	Revisions to the Home Equity Conversion Mortgages (HECMs) Program	3/8/2000	X	.....
203	Home Equity Conversion Mortgages (HECMs) in Texas	3/8/2000	X	.....
204	Home Equity Conversion Mortgage (HECM) Insurance Program—Lapse of Insuring Authority. • Attachment (6/25/2001). • Attachment 1 (12/28/2001). • Attachment 2 (12/28/2001).	9/29/1995	X	.....
205	Single Family Loan Production—Increase in FHA Maximum Mortgage Limits ..... • Attachment I (12/31/2002). • Attachment II (12/31/2002).	12/28/2001	X	.....
206	Single Family Loan Production—Increase in FHA Maximum Mortgage Limits ..... • Attachment (8/28/2003).	12/31/2002	X	.....
207	Revisions to FHA Maximum Mortgage Areas and Limits ..... • Attachment 1 (12/31/2003). • Attachment 2 (12/31/2003).	8/28/2003	X	.....
208	Single Family Loan Production—Increase in FHA Maximum Mortgage Limits	12/31/2003	X	.....
209	Revised "Residential Loan Application for Reverse Mortgages" Required for Home Equity Conversion Mortgage (HECM). • Attachment (4/23/2004). • Attachment (9/29/2004). • Attachment (11/1/2004).	4/2/2004	X	.....
210	Property Flipping Prohibition Exemption in Presidentially-declared Major Disaster Areas in Midwestern States.	11/24/2008	X	.....
211	Pre-Foreclosure Sale Program—Claims Instructions	3/24/1992	X	.....
212	Servicing FHA-Insured Mortgages Affected by the Los Angeles Riots (April 30, 1992)	5/22/1992	X	.....
213	Servicing FHA-Insured Mortgages Affected by Hurricane Andrew	8/28/1992	X	.....
214	Assistance to Mortgagors Adversely Affected by Hurricane Andrew	No Date X	X	.....
215	Single Family Default Monitoring System: Introduction of Monthly Error Reports and Policy Clarifications.	4/14/1994	X	.....
216	Deeds-in-lieu of Foreclosure	4/19/1994	X	.....
217	Single Family Loan Production—Increase in FHA Maximum Mortgage Limits	10/21/1998	X	.....
218	"Reinventing" FHA—Opening of Single Family Homeownership Centers	10/7/1996	X	.....
219	1997 Preservation and Protection/Post Endorsement Guidelines and Fee Schedules ..... • Attachment (4/2/2004).	No Date	X	.....
220	Changes to the Home Equity Conversion Mortgage Program Requirements	9/3/2013	X	.....

APPENDIX E—HOUSING/FHA MORTGAGEE LETTERS—Continued

	Name of document	Date	Arch	Remove
221	IRS Tax Credit Summary	1/4/2011	X	.....
222	Annual Revisions to Base City High Cost Percentage, High Cost Area and Per Unit Substantial Rehabilitation Threshold for 2019.	5/20/2019	X	.....
223	Annual Revisions to Base City High Cost Percentage, High Cost Area and Per Unit Substantial Rehabilitation Threshold for 2018.	5/23/2018	X	.....
224	Annual Revisions to Base City High Cost Percentage, High Cost Area and Per Unit Substantial Rehabilitation Threshold for 2017.	8/31/2017	X	.....
225	Online Versions of Handbooks 4155.1, Mortgage Credit Analysis for Mortgage Insurance; and 4155.2, Lenders' Guide to Single Family Mortgage Insurance Processing.	4/9/2009	X	.....
226	Revision of Mortgagee Letter ML 10–30, Extension of Temporary Authority for Multifamily Hubs to Process Waiver Requests Pertaining to the Three-Year Rule for Section 223(f)1.	2/17/2011	X	.....
227	Revisions to Large Loan Risk Mitigation Policies	2/28/2014	X	.....
228	HUD Office of Multifamily Development Radon Policy	1/31/2013	X	.....

APPENDIX F—HOUSING/FHA NOTICES AND OTHER GUIDANCE

	Name of document	Date	Arch	Remove
1	Funding Procedures Applicable to FHA-Field Office Procurements • Attachment 1. • Attachment 2. • Attachment 3. • Attachment 4.	10/22/1999	X	.....
2	Deposit of FHA Funds	4/1/1997	X	.....
3	Fire Safety Equipment Loan Insurance Program for Nursing Homes	No Date	X	.....
4	Accounts Receivable (''AR'') Financing	11/17/2008	X	.....
5	Document 01–03 Appendices	03/09/2001	X	.....
6	Hospital Mortgage Insurance: Section 223(f) Refinancing in Conjunction with Section 242 Financing—Amendments to Threshold Criteria.	2/22/2010	X	.....
7	Hospital Mortgage Insurance: Section 223(f) Refinancing in Conjunction with Section 242 Financing.	7/1/2009	X	.....
8	Rider to HUD–92323–ORCF, Operator Security Agreement	9/6/2013	X	.....
9	Single Family Mortgage Insurance Case Binder Submission, Maintenance	7/1/1991	X	.....
10	Land Planning Procedures and Data for Insurance for Home Mortgage	4/1/1973	X	.....
11	Home Mortgage Insurance Condominium Units	7/1/1973	X	.....
12	Mortgage Assignment Processing and Secretary-Held Servicing	3/24/1995	X	.....
13	Extension of ''Revitalization Area Evaluation Criteria—Single Family Property Disposition''.	12/12/2001	X	.....
14	Extension of ''$1 Home Sales to Local Governments Program''	6/11/2001	X	.....
15	Reinstatement and Extension of Notice H 94–66 (HUD), Recapture of Section 235 Assistance Payment Guide.	5/29/2002	X	.....
16	Revitalization Area Evaluation Criteria—Single Family Property Disposition	7/15/2003	X	.....
17	Elimination of Lead-Based Paint Hazards in HUD-Owned Single Family Properties Built Before 1978 and Sold with FHA-Insured Financing.	12/23/2003	X	.....
18	Secretary-Held Mortgages—The Interest Rate Reduction Program	7/12/2004	X	.....
19	Radon Gas and Mold Notice and Release Agreement	5/28/2004	X	.....
20	Revitalization Area Evaluation Criteria—Single Family Property Disposition	4/6/2005	X	.....
21	Extension of Housing Notice H 2005–09, Revitalization Area Evaluation Criteria—Single Family Property Disposition.	4/14/2006	X	.....
22	Extension of Housing Notice H 2005–14, Lead Disclosure Requirements and Addendum Format.	6/20/2006	X	.....
23	Home Equity Conversion Mortgage Program—Consolidation of Pricing Options and Principal Limit Factors for Fixed Interest Rate Mortgages.	1/30/2013	X	.....
24	Closing Agent Services Request for Proposal (RFP) Format (Single Family Property Disposition).	4/23/1990	X	.....
25	Maintenance of the Claims Without Conveyance of Title (CWCOT) Case Files	9/20/1990	X	.....
26	Monitoring of Monthly Mortgage Insurance Premium (MIP) Remittances (Limited Scope)	1/25/1991	X	.....
27	Solicitation and Requirements for Single Family Real Estate Asset Management (REAM) Services.	2/6/1991	X	.....
28	Claims Without Conveyance of Title (CWCOT) Deficiency Judgment Bidding and Reimbursement Procedures.	3/11/1991	X	.....
29	RESCISSION—Acceleration of Mortgages Subject to the Housing and Community Development Act of 1987 and the Department of Housing and Urban Development Reform Act of 1989.	3/14/1991	X	.....
30	Additional Information—Monthly Mortgage Insurance Premium (MIP) Remittances	7/29/1991	X	.....
31	Lease and Sale of Acquired Single Family Properties for the Homeless—Housing Responsibilities.	11/7/1991	X	.....
32	Revision & Extension of H 90–83/Instructions to Field Offices on Implementation of Single Family Demonstration Program for Sale of Properties to Nonprofits and Government Entities.	11/15/1991	X	.....

APPENDIX F—HOUSING/FHA NOTICES AND OTHER GUIDANCE—Continued

	Name of document	Date	Arch	Remove
33	Single Family Claims for Insurance Benefits: Changes in the Requirements for Preservation and Protection of Insured Properties.	12/5/1991	X	.....
34	Failure to Abide by HUD's Earnest Money Policy	1/28/1992	X	.....
35	Designation of Authority and Responsibility for Decentralized Single Family Foreclosure Management and Contract Administration.	2/27/1992	X	.....
36	Supervisory Review and Management of the Assigned Single Family Mortgage Portfolio (Material Weakness 89–15).	3/11/1992	X	.....
37	Extension of Notice H 91–34 (HUD), Procedures for Reconveyance and Procedures for Reimbursement to Lenders on Uninsured Cases.	4/13/1992	X	.....
38	Extension of Notice H 91–24 (HUD), Rescission—Acceleration of Mortgages Subject to the Housing and Community Development Act of 1987 and the Department of Housing and Urban Development Reform Act of 1989.	4/13/1992	X	.....
39	Extension of Notice H 91–20, Fraud, Waste and Mismanagement Vulnerability Secretary-Held Mortgages—Section 235.	4/13/1992	X	.....
40	Extension of Notice H 91–23 (HUD) Claims Without Conveyance of Title (CWCOT)—Deficiency Judgment Bidding and Reimbursement Procedures.	4/13/1992	X	.....
41	Servicing FHA-insured Mortgages Affected by the Los Angeles Riots (April 30, 1992) REGION IX (LOS ANGELES OFFICE ONLY).	5/22/1992	X	.....
42	Extensions of Closing Agent Services Request for Proposal (RFP) Format Single Family Property Disposition.	6/15/1992	X	.....
43	Extension of Notice, Claims Without Conveyance of Title (CWCOT) Reporting	5/31/1992	X	.....
44	Extension of Single Family Development—Extension of Reciprocity in the Approval of Subdivisions.	6/15/1992	X	.....
45	Revision to Notice H 91–91, Lease and Sale of Acquired Single Family Properties For the Homeless—Housing Responsibilities.	1/13/1992	X	.....
46	Revised Lead-Based Paint Hazard Notice and Disclosure Requirements	8/11/1992	X	.....
47	Single Family Accounting Management System Internal Controls	8/12/1992	X	.....
48	Extension of Notice 91–63, Extension of Time Requirement for Single Family Claims for Insurance Benefits.	8/11/1992	X	.....
49	Extension of Notice 91–75 (HUD), Requests for Payment of Property Disposition Procurement—SAMS 1106 Form, Invoice Transmittal.	8/11/1992	X	.....
50	Extension of Notices H 90–51 and H 91–74, Single Family Property Disposition Pricing of Properties.	8/11/1992	X	.....
51	The Interest Rate Reduction Program	8/13/1992	X	.....
52	Monitoring Mortgagees During On-site Reviews in Compliance with the Provisions of the Housing and Urban Development Act of 1968 as amended—Single Family.	8/28/1992	X	.....
53	Monitoring Real Estate Asset Managers and Closing Agents	9/28/1992	X	.....
54	Extension of Notice H 91–91, Lease and Sale of Acquired Single Family Properties for the Homeless—Housing Responsibilities.	10/26/1992	X	.....
55	Extension of Notice H 91–94, Single Family Claims for Insurance Benefits: Changes in the Requirements for Preservation and Protection of Insured Properties.	11/17/1992	X	.....
56	Extension of Notice H 91–92 (HUD), Revision & Extension of H 90–83/Instructions to Field Offices on Implementation of Single Family Demonstration Program for Sale of Properties to Nonprofits and Government Entities.	11/20/1992	X	.....
57	Clarification of Solicitation Document for Real Estate Asset Management (REAM) Contracts.	1/17/1992	X	.....
58	Fiscal Year 1993 Special Marketing Tools	12/3/1992	X	.....
59	Civil Money Penalties Implementation of the HUD Reform Act of 1989	12/11/1992	X	.....
60	Requirement to Provide State and Local Tax Information to Providers in the Single Family Homeless Initiative Program and Start of FY' 93 Inventory Guidelines by Region.	12/18/1992	X	.....
61	Extension of Notice H 91–12 (HUD), Solicitation and Requirements for Single Family Real Estate Asset Management (REAM) Services.	2/26/1993	X	.....
62	Extension of Notice H 92–18 (HUD), Designation of Authority and Responsibility for Decentralized Single Family Foreclosure Management and Contract Administration.	2/26/1993	X	.....
63	Reinstatement and extension of Notice H 91–65 (HUD), Additional Information—Monthly Mortgage Insurance Premium (MIP) Remittances.	2/26/1993	X	.....
64	Electronic Data Interchange of Form HUD–27011 and Title Approval Letters	3/5/1993	X	.....
65	Single Family Development and Management Directive—Revised Section 235(r) Refinance Program.	3/9/1993	X	.....
66	Extension of Notice H 92–26 (HUD), Supervisory Review and Management of the Assigned Single Family Mortgage Portfolio (Material Weakness 89–15).	3/24/1993	X	.....
67	Extension of Notice H 92–10 (HUD), Failure to Abide by HUD's Earnest Money Policy ...	1/13/1993	X	.....
68	Reinstatement and extension of Notice H 91–24 (HUD), Rescission—Acceleration of Mortgages Subject to the Housing and Community Development Act of 1987 and the Department of Housing & Urban Development Reform Act of 1989.	4/30/1993	X	.....
69	Reinstatement and extension of Notice H 91–20 (HUD), Fraud, Waste and Mismanagement Vulnerability Secretary-Held Mortgages—Section 235.	4/1/1993	X	.....
70	Reinstatement and extension of Notice H 91–34 (HUD), Procedures for Reconveyance and Procedures for Reimbursement to Lenders on Uninsured Cases.	4/26/1993	X	.....
71	Reinstatement and extension of Notice H 91–23 (HUD), Claims Without Conveyance of Title (CWCOT)—Deficiency Judgement Bidding and Reimbursement Procedures.	4/1/1993	X	.....
72	Form SAMS–1116A, Selling Broker Information and Certification	6/11/1993	X	.....

APPENDIX F—HOUSING/FHA NOTICES AND OTHER GUIDANCE—Continued

	Name of document	Date	Arch	Remove
73	Extension of Notice H 92–8 (HUD), Clarification of Solicitation Document for Real Estate Asset Management (REAM) Contracts.	1/13/1993	X	.....
74	Single Family Claim Reviews	7/1/1993	X	.....
75	''Byrd Amendment''—Limitation on Payments made to Influence Certain Federal Financial and Contracting Transactions.	6/21/1993	X	.....
76	Rescinding Quarterly Reporting for the Single Family Deficiency Judgment Program	6/28/1993	X	.....
77	Extension of Notice H 90–31 (HUD), Closing Agent Services Request for Proposal (RFP) Format (Single Family Property Disposition).	6/30/1993	X	.....
78	Extension of Notice H 92–5 (HUD), Revision to Notice H 91–91, Lease and Sale of Acquired Single Family Properties for the Homeless—Housing Responsibilities.	1/14/1993	X	.....
79	Lease of HUD-Owned Single Family Properties to State and Local Governments For Use In Law Enforcement.	8/17/1993	X	.....
80	Changes and Clarifications of Existing Procedures on Compromises and Write-offs of Secretary-held Mortgages.	9/9/1993	X	.....
81	Change of Notice Number H 93–62 (HUD): Extension of Notice H 92–62 (HUD), Revised Lead-Based Paint Hazard Notice and Disclosure Requirements, Dated August 24, 1993.	9/14/1993	X	.....
82	Sale of HUD Owned Properties to HOPE 3 Grant Recipients	1/19/1993	X	.....
83	Extension of Notice H 92–73 (HUD): Monitoring Real Estate Asset Managers and Closing Agents.	9/20/1993	X	.....
84	Military Base Closings	9/30/1993	X	.....
85	Reinstatement and Extension of Notice H 92–63 (HUD): Single Family Accounting Management System Internal Controls.	10/4/1993	X	.....
86	Policy And Procedural Guidelines For Paying Taxes Through SAMS And The Service Center.	2/26/1993	X	.....
87	Reinstatement and Extension of Notice H 90–71 (HUD): Maintenance of the Claims Without Conveyance of Title (CWCOT) Case Files.	10/20/1993	X	.....
88	Modified Sales Procedures Single Family Property Disposition	10/25/1993	X	.....
89	Extension of Notice H 92–83 (HUD): Lease and Sale of Acquired Single Family Properties for the Homeless—Housing Responsibilities.	11/8/1993	X	.....
90	Designation of ''Revitalization Areas'' for FY '94 in the Single Family Property Disposition Sales Program.	11/10/1993	X	.....
91	Pilot Program—Single Family Property Disposition Program Referral of Delinquent Former Tenant Accounts to Debt Management Centers.	11/12/1993	X	.....
92	Fiscal Year 1994 Special Marketing Tools	12/7/1993	X	.....
93	Reinstatement and Extension of Notice H 92–67 (HUD): The Interest Rate Reduction Program.	12/8/1993	X	.....
94	System Security Procedures for the Single Family Accounting Management System (SAMS).	12/27/1993	X	.....
95	Extension of Notice H 91–6 (HUD), Monitoring of Monthly Mortgage Insurance Premium (MIP) Remittances (limited Scope).	2/26/1993	X	.....
96	Extension of Notice H 93–38 (HUD), Form SAMS–1116A, Selling Broker Information and Certification.	6/16/1994	X	.....
97	New HUD Single Family Nonjudicial Foreclosure Statute	11/22/1995	X	.....
98	Extension of Notice H 91–6 (HUD), Monitoring of Monthly Mortgage Insurance Premium (MIP) Remittance (Limited Scope) and Notice H 91–65 (HUD), Additional Information—Monthly Mortgage Insurance Premium (MIP) Remittances.	3/31/1995	X	.....
99	Revisions to the Single Family Property Disposition Homeless Program	4/21/1995	X	.....
100	Extension of Notice H 91–24 (HUD), Rescission—Acceleration of Mortgages Subject to the Housing and Community Development Act of 1987 and the Department of Housing & Urban Development Reform Act of 1989.	4/28/1995	X	.....
101	Changes to the FHA Single Family Maximum Mortgage Limits	5/8/1995	X	.....
102	Reinstatement and Extension of Notice H 92–67 (HUD), The Interest Rate Reduction Program.	1/1/1995	X	.....
103	Extension of Notice H 94–43 (HUD), Revision to the SFPD Homeless Initiative Program	6/19/1995	X	.....
104	Designation of FY '95 Revitalization Areas	1/20/1995	X	.....
105	Extension of Notice H 94–49 (HUD), 1992 Amendments to the Single Family Regulations.	6/27/1995	X	.....
106	Elimination of Monetary Limits for Field Office Approval of Compromises and Write-offs of Secretary-Held Mortgages.	6/27/1995	X	.....
107	Extension of Notice H 94–49 (HUD), 1992 Amendments to the Single Family Regulations.	7/13/1995	X	.....
108	Extension of Notice H 93–58 (HUD), Lease of HUD-Owned Single Family Properties to State and Local Governments for Use In Law Enforcement.	8/31/1995	X	.....
109	Use of Single Family Acquired Properties by Law Enforcement Agencies for Operation Safe Home.	11/7/1995	X	.....
110	Extension of Notice H 94–66 (HUD), Recapture of Section 235 Assistance Payments Guide (For Field Office Use Only).	9/30/1995	X	.....
111	Reinstatement and Extension of Notice H 94–74 (HUD), Revisions to Single Family Property Disposition Sales Procedures.	10/11/1995	X	.....
112	Reinstatement and Extension of Notice H 90–31, Closing Agent Services Request for Proposal (RFP) Format Single Family Property Disposition.	10/11/1995	X	.....

APPENDIX F—HOUSING/FHA NOTICES AND OTHER GUIDANCE—Continued

	Name of document	Date	Arch	Remove
113	Fiscal Year 1996 Special Marketing Tools	11/20/1995	X	.....
114	Correction to Notice H 96–91 (Extension of HUD Notice H 95–99, Fiscal Year 1996 Special Marketing Tools).	11/27/1996	X	.....
115	Extension of Notice 95–82 (HUD), Use of Single Family Acquired Properties by Law Enforcement Agencies for Operation Safe Home.	11/29/1996	X	.....
116	Temporary Suspension of New Leases under the Single Family Property Disposition Homeless Program, Lease with Option to Purchase.	12/31/1996	X	.....
117	Extension of Notice H 95–15 (HUD), Single Family Property Disposition Program—Changes to procedures for Treatment of Defective Paint.	3/29/1996	X	.....
118	Extension of Notice H 91–6 (HUD), Monitoring of Monthly Mortgage Insurance Premium (MIP) Remittance (Limited Scope) and Notice H 91–65 (HUD), Additional Information-Monthly Mortgage Insurance Premium (MIP) Remittances.	3/29/1996	X	.....
119	Secretary-Held Mortgages—Assessment of Late Charges	4/15/1996	X	.....
120	Extension of Notice H 95–34 (HUD), Revision to the Single Family Property Disposition Homeless Program.	4/30/1996	X	.....
121	Extension of Notice H 91–20 (HUD), Fraud, Waste and Mismanagement Vulnerability Secretary-Held Mortgages—Section 235.	4/30/1996	X	.....
122	Extension of Notice H 91–20 (HUD), Fraud, Waste and Mismanagement Vulnerability Secretary-Held Mortgages—Section 235.	4/30/1996	X	.....
123	Repayment under the Nehemiah Housing Opportunity Grants Program (NHOP) (For Field Office Use Only).	2/6/1996	X	.....
124	Single Family Property Disposition Program—Disclosure Requirements Related to Obtaining A Home Inspection.	5/22/1996	X	.....
125	Extension of Notice H 95–62 (NOD), Elimination of Monetary Limits for Field Office Approval of Compromises and Write-offs or Secretary-Held Mortgages.	6/28/1996	X	.....
126	Extension of Notice H 94–43 (HUD), Revision to the SFPD Homeless Initiative Program	6/28/1996	X	.....
127	Extension of Notice H 95–53 (HUD)—Revised Procedures for Determining Median House Sales Price and Establishing FHA Single Family Maximum Mortgage Limits for High Cost Areas.	6/28/1996	X	.....
128	Public Housing Homeownership Initiative	8/7/1996	X	.....
129	Extension of Notice H 93–58 (HUD), Lease of HUD-Owned Single Family Properties to State and Local Governments for Use In Law Enforcement.	8/30/1996	X	.....
130	Extension of Notice H 95–79 (HUD), Single Family Property Disposition/Real Estate Owned Preservation and Protection—Debris Removal.	9/30/1996	X	.....
131	Extension of Notice H 94–66 (HUD), Recapture of Section 235 Assistance Payments Guide (For Field Office Use Only).	9/30/1996	X	.....
132	Reinstatement and Extension of Notice H 92–67, The Interest Rate Reduction Program	9/30/1996	X	.....
133	Reinstatement and Extension of Notice H 91–12 (HUD): Solicitation and Requirements for Single Family Real Estate Asset Management (RAM) Services and Notice H 92–8 (HUD), Clarification of Solicitation Document for Real Estate Asset Management (REAM) Contracts.	2/1/1996	X	.....
134	Extension of HUD Notice H 95–99, Fiscal Year 96 Special Family Housing, HS	10/31/1996	X	.....
135	Single Family Property Disposition Program—New Initiatives Relating to Lead-Based Paint Hazards.	11/5/1996	X	.....
136	Reinstatement and Extension of Notice H 95–89 (HUD), Revisions to Single Family Property Disposition Sales Procedures.	11/6/1996	X	.....
137	Suspension Of Reserve For Replacement Releases By Mortgagees	11/15/1996	X	.....
138	Reinstatement and Extension of Notice H 96–08 (HUD), Solicitation and Requirements for Single Family Real Estate Asset Management (REAM) Services and Notice H 92–8 (HUD), Clarification of Solicitation Document for Real Estate Asset Management (REAM) Contracts.	2/20/1997	X	.....
139	Extension of Notice H 96–17 (HUD), Single Family Property Disposition Program—Changes to Procedures for Treatment of Defective Paint.	3/27/1997	X	.....
140	Extension of Notice H 95–34 (HUD), Revision to the Single Family Property Disposition Homeless Program.	4/30/1997	X	.....
141	Revised User Fees for the Technical Suitability of Products Program	5/1/1997	X	.....
142	Reinstatement and Extension of Notice 96–26 (HUD), Revisions to the Single Family Property Disposition Homeless Program.	7/18/1996	X	.....
143	Extension of Notice H 96–71 (HUD), Public Housing Homeownership Initiative	7/29/1997	X	.....
144	Reinstatement and Extension of Notice 96–55 (HUD), Revision to the SFPD Homeless Initiative Program.	7/21/1997	X	.....
145	Extension of Notice H 96–75 (HUD), Lease of HUD-Owned Single Family Properties to State and Local Governments for Use In Law Enforcement.	10/22/1997	X	.....
146	Extension of HUD Notice H 96–100, Correction to Notice H 96–91 (Extension of HUD Notice H 95–99, Fiscal year 1996 Special Marketing Tools).	10/27/1997	X	.....
147	Extension of Notice H 96–93 (HUD), Single Family Property Disposition Program—New Initiatives Relating to Lead-Based Paint Hazards.	12/2/1997	X	.....
148	Supplement to Notice H 96–45, Revised Procedures for Review and Approval of Waivers of Directives.	2/3/1997	X	.....
149	Extension of Notice H 96–101 (HUD), Use of Single Family Acquired Properties by Law Enforcement Agencies for Operation Safe Home.	12/2/1997	X	.....

APPENDIX F—HOUSING/FHA NOTICES AND OTHER GUIDANCE—Continued

	Name of document	Date	Arch	Remove
150	Extension of Notice H 96–107, Temporary Suspension of New Leases under the Single Family Property Disposition Homeless Program, Lease with Option to Purchase.	12/31/1997	X	.....
151	Extension of Notice H 97–22 (HUD), Single Family Property Disposition Program—Changes to Procedures for Treatment of Defective Paint.	4/2/1998	X	.....
152	Direct Endorsement Update—Sending Copies of Rejected Loan Applications to HUD	1/19/1990	X	.....
153	Direct Endorsement Update—Mortgagee Staff Appraisers	8/14/1990	X	.....
154	Extension of Notice H 93–7: Policy and Procedural Guidelines for Paying Taxes Through SAMS and The Service Center.	2/23/1994	X	.....
155	Extension of Notice H 91–12 (HUD): Solicitation and Requirements for Single Family Real Estate Asset Management (REAM) Services.	2/28/1994	X	.....
156	Reinstatement and Extension of Notice H 92–18 (HUD), Designations of Authority and Responsibility for Decentralized Single Family Foreclosure Management and Contract Administrations.	3/15/1994	X	.....
157	Reinstatement and Extension of Notice H 91–6 (HUD), Monitoring of Monthly Mortgage Insurance Premium (MIP) Remittance (Limited Scope) and Notice H 91–65 (HUD), Additional Information—Monthly Mortgage Insurance Premium (MIP) Remittances.	3/15/1994	X	.....
158	Fiscal Year 1994 Request for Grant Application (RFGA) for Housing Counseling	4/8/1994	X	.....
159	Extension of Notice H 91–20 (HUD), Fraud, Waste and Mismanagement Vulnerability Secretary-Held Mortgages—Section 235.	4/30/1994	X	.....
160	Extension of Notice H 91–24 (HUD), Rescission—Acceleration of Mortgage Subject to the Housing and Community Development Act of 1987 and the Department of Housing & Urban Development Reform Act of 1989.	4/30/1994	X	.....
161	Reinstatement and Extension of Notice H 92–98 (HUD) Civil Money Penalties Implementation of the HUD Reform Act of 1989.	1/7/1994	X	.....
162	Reinstatement and Extension of Notice H 92–98 (HUD) Civil Money Penalties Implementation of the HUD Reform Act of 1989.	1/7/1994	X	.....
163	Extension of Notice H 91–23 (HUD Claims Without Conveyance of Title (CWCOT)—Deficiency Judgement Bidding and Reimbursement Procedures.	4/30/1994	X	.....
164	Extension of Notice H 92–8 (HUD), Clarification of Solicitation Document for Real Estate Asset Management (REAM) Contracts.	1/31/1994	X	.....
165	Supplemental Claims	5/26/1994	X	.....
166	Revisions to the SFPD Homeless Initiative Program	6/14/1994	X	.....
167	SFPD Modified Sales Procedures	6/16/1994	X	.....
168	Extension of Notice H 90–31 (HUD), Closing Agent Services Request for Proposal (RFP) Format (Single Family Property Disposition).	6/16/1994	X	.....
169	Interest Rate Reduction on Secretary-held Mortgages	8/9/1994	X	.....
170	Extension of Notice H 93–58 (HUD), Lease of HUD-Owned Single Family Properties to State and Local Governments for Use In Law Enforcement.	8/31/1994	X	.....
171	Recapture of Section 235 Assistance Payments Guide (For Field Office Use Only)	9/2/1994	X	.....
172	Reinstatement and extension of Notice 92–10 (HUD), Failure to abide by HUD's Earnest Money Policy.	1/31/1994	X	.....
173	Single Family Property Disposition Sales Program for Public Safety Employees	9/16/1994	X	.....
174	Form HUD 9887–A, Applicant's and Tenant's Consent to the release of Information (Used by Owners).	9/16/1994	X	.....
175	Designation of FY '95 Revitalization Areas	9/29/1994	X	.....
176	Fiscal Year 1995 Special Marketing Tools	9/30/1994	X	.....
177	Reinstatement and Extension of Notice H 92–5 (HUD) Revision to Notice H 91–91, Lease and Sale of Acquired Single Family Properties For the Homeless—Housing Responsibilities.	2/10/1994	X	.....
178	Extension of Notice H 93–66 (HUD), Changes and Clarifications of Existing Procedures on Compromises and Write-offs of Secretary-held Mortgages.	10/14/1994	X	.....
179	Extension of Notice H 93–73 (HUD), Military Base Closings	10/14/1994	X	.....
180	1. Servicing Insured HECM Mortgages	10/21/1994	X	.....
181	2. HECM Assignment Processing	10/21/1994	X	.....
182	3. Servicing Secretary-held HECM Mortgages	10/21/1994	X	.....
183	Single Family Property Disposition Homeless Program Fiscal Year 1995 Exception Offices.	12/1/1994	X	.....
184	Reinstatement and Extension of Notice H 93–86 (HUD), Pilot Program—Single Family Property Disposition Program Referral of Delinquent Former Tenant Accounts to Debt Management Centers.	12/15/1994	X	.....
185	H.R. Rep. 102–760	7/30/1992	X	.....
186	S. Rep. 102–332	7/23/1992	X	.....
187	Pre-Claim Collection Assistance	9/25/1986	X	.....
188	Obtaining Appraisal Services on Manufactured Homes	1/11/1988	X	.....
189	Third Regional Service Center Established	11/3/1988	X	.....
190	Request for Comments and Suggestions for Possible Changes to the Title I Program	11/3/1989	X	.....
191	Home Mortgage Disclosure Act Reporting Requirements	8/1/1990	X	.....
192	Proposed Reform of the Title I Program	1/29/1991	X	.....
193	Title I Express Telephone Service	2/25/1991	X	.....
194	Imposition of Civil Money Penalties Against Title I Lenders, Dealers and Loan Correspondents Under the Department of HUD Reform Act of 1989.	8/23/1991	X	.....
195	Change of Notification of Annual Recertification Procedures	8/10/1992	X	.....

APPENDIX F—HOUSING/FHA NOTICES AND OTHER GUIDANCE—Continued

	Name of document	Date	Arch	Remove
196	Changes in the Property Improvement Loan Program and Title I Lender Approval Requirements.	10/6/1994	X	.....
197	Title I Showcase Program	No Date	X	.....
198	Waiver Of The Title I Regulations To Assist Victims Of Hurricanes Marilyn And Opal	1/19/1996	X	.....
199	First Title I Showcase Award Made To The Philadelphia Home Improvement Loan Program.	4/10/1996	X	.....
200	Special Title I Assistance to Victims in Presidentially Declared Major Disaster Areas—Nevada, Idaho, California, South Dakota, North Dakota, Minnesota, Washington, and Oregon.	2/10/1997	X	.....
201	Special Title I Assistance to Victims in Presidentially Declared Major Disaster Areas—Arkansas, Kentucky and Ohio.	3/10/1997	X	.....
202	Special Title I Assistance to Victims in Presidentially Declared Major Disaster Areas-Indiana, Tennessee, West Virginia and additional counties.	3/19/1997	X	.....
203	Special Title I Assistance to Victims in Presidentially Declared Major Disaster Areas—Illinois.	4/1/1997	X	.....
204	Declared Major Disaster Areas—Minnesota, North Dakota, South Dakota, Washington State and Tennessee.	4/14/1997	X	.....
205	Special Title I Assistance to Victims in Presidentially Declared Major Disaster Areas—Arkansas.	4/29/1997	X	.....
206	Major Disaster Areas—Additional Counties added to the Previous Disaster Declarations for Minnesota.	5/16/1997	X	.....
207	Planned Reform of the Property Improvement Loan Program	5/29/1997	X	.....
208	Special Title I Assistance to Victims in Presidentially Declared Major Disaster Areas—Texas and Wisconsin.	7/16/1997	X	.....
209	Special Title I Assistance to Victims in Presidentially Declared Major Disaster Areas—Mississippi.	7/18/1997	X	.....
210	Special Title I Assistance to Victims in Presidentially Declared Major Disaster Areas—Alabama, Vermont, Washington State and Michigan.	8/4/1997	X	.....
211	Special Title I Assistance to Victims in Presidentially Declared Major Disaster Area—Colorado.	8/14/1997	X	.....
212	Special Title I Assistance to Victims in Presidentially Declared Major Disaster Areas—Minnesota.	9/23/1997	X	.....
213	Special Title I Assistance to Victims in Presidentially Declared Major Disaster Areas—Nebraska.	12/8/1997	X	.....
214	Special Title I Assistance to Victims in Presidentially Declared Major Disaster Areas—ME, TN, NY, FL, GU, & Northern Mariana Island.	1/15/1998	X	.....
215	Lender List on the World Wide Web	1/15/1998	X	.....
216	Special Title I Assistance to Victims in Presidentially Declared Major Disaster Areas—North Carolina, Vermont, New Hampshire and an Additional County.	1/28/1998	X	.....
217	Special Title I Assistance to Victims in Presidentially Declared Major Disaster Areas—California, New Mexico and Additional Counties Added.	2/20/1998	X	.....
218	Special Title I Assistance to Victims in Presidentially Declared Major Disaster Areas	3/26/1998	X	.....
219	Special Title I Assistance to Victims in Presidentially Declared Major Disaster Areas	4/17/1998	X	.....
220	FHA Connection Lender Approval Functions: Adding Branches, Maintaining Institution Data, and Determining Recertification Fees.	5/14/1999	X	.....
221	Temporary Suspension of Authority to Insure Under Title I of the National Housing Act ..	7/17/2000	X	.....
222	Reinstatement of General Insurance Endorsement Authority	11/11/2000	X	.....
223	Temporary Suspension of Authority to Insure Under Title I of the National Housing Act ..	9/13/2003	X	.....
224	Temporary Suspension of Authority to Insure Under Title I of the National Housing Act ..	1/12/2004	X	.....
225	Electronic Payment of the Annual Recertification Fee and Downloading of the Yearly Verification Report via the FHA Connection.	5/17/2005	X	.....
226	Modifications to the Home Energy Retrofit Loan Pilot Program (FHA PowerSaver Pilot Program).	9/18/2013	X	.....
227	FHA Consolidation of Title I and Title II Lender Identification Numbers	3/18/2014	X	.....
228	Annual Revisions to Base City High Cost Percentage, High Cost Area and Per Unit Substantial Rehabilitation Threshold for 2019.	5/20/2019	X	.....
229	Annual Revisions to Base City High Cost Percentage, High Cost Area and Per Unit Substantial Rehabilitation Threshold for 2018.	5/23/2018	X	.....
230	Index of Housing Issuances	9/27/1991	X	.....
231	Section 811 PRA Report to Congress	5/1/2014	X	.....
232	Guidelines for Mark-Up-To-Market Nonprofit Transfers and Budget-Based Rent Increase for Capital Repairs by Nonprofit Owners.	No Date	X	.....
233	Admission and Occupancy Provisions of the Quality Housing and Work Responsibility Act of 1998 (QHWRA) for Multifamily Housing Programs.	No Date	X	.....
234	Guidelines For Calculating And Retaining Section 236 Excess Income	No Date	X	.....
235	Reinstatement and Extension of HUD Notice H 99–17, Annual Adjustment Factors (AAF).	No Date	X	.....
236	Review of Budget-based Rent Increase Requests from Project Owners	No Date	X	.....
237	Electronic Submission Of Tenant Data Using Form HUD–50059 input to the Tenant Rental Assistance Certification System (TRACS) For Preservation Properties.	1/31/2001	X	.....
238	Guidelines For Calculating And Retaining Section 236 Excess Income	7/27/2001	X	.....
239	Section 221(d)(3) Nonprofit Transactions	No Date	X	.....

APPENDIX F—HOUSING/FHA NOTICES AND OTHER GUIDANCE—Continued

	Name of document	Date	Arch	Remove
240	***Compliance with Section 504 of the Rehabilitation Act of 1973 and the Disability/Accessibility Provisions of the Fair Housing Act of 1988 [OGCFH Concurring: We do not know to what document this entry refers and are concerned from its title that it may be a document that was jointly created with FHEO. Therefore, we strongly recommend that this document not be archived without first consulting with our office and/or FHEO.] ***.	5/30/2003	X	.....
241	Screening and Eviction for Drug Abuse and Other Criminal Activity—Final Rule	5/24/2001	X	.....
242	Renewal of Expiring Project Rental Assistance Contracts (PRACS) for Projects Under the Section 202 Program of Supportive Housing for the Elderly and the Section 811 Program of Supportive Housing for Persons with Disabilities.	8/31/2003	X	.....
243	Revised Prepayment of Direct Loans on Section 202 and 202/8 Projects	7/26/2019	X	.....
244	Section 8 Project-Based Rent Adjustments Using the Annual Adjustment Factor (AAF) ...	11/8/2017	X	.....
245	Technical Corrections To Notice H 01–07—Guidelines For Calculating And Retaining Section 236 Excess Income.	No Date	X	.....
246	Guidance on Asset Management Issues Concerning Bond Financed Section 8 Projects	No Date	X	.....
247	Office of Management and Budget Mandated Reporting Changes to Race and Ethnicity Categories.	No Date	X	.....
248	Guidance to Contract Administrators on Providing Information to Law Enforcement on Fugitive Felons.	No Date	X	.....
249	Reinstatement and Extension of HUD Notice H 2002–10, Section 8 Project-Based Rent Adjustments Using the Annual Adjustment Factor (AAF).	7/5/2004	X	.....
250	Verification of Immigration Status in HUD-Assisted Properties	No Date	X	.....
251	Deployment of Military Personnel to Active Duty	No Date	X	.....
252	Income calculation and verification guidance regarding Medicare Prescription Drug Cards and Transitional Assistance.	11/10/2004	X	.....
253	Prepayments Subject to Section 250(a) of the National Housing Act	11/2014	X	.....
254	Income calculation regarding Medicare Prescription Drug Cards and Transitional Assistance.	7/30/2005	X	.....
255	Prepayment of Direct Loans on Section 202 and 202/8 Projects with Inclusion of FHA Mortgage Insurance Guidelines.	8/31/2003	X	.....
256	Reinstatement and Extension of Notice H 99–13, Revised Asset Management Procedures.	No Date	X	.....
257	Procedures for Preparing, Submitting & Reviewing Rent Comparability Studies	No Date	X	.....
258	Guidelines for Continuation of Interest Reduction Payments after Refinancing: ''Decoupling'', under Section 236(e)(2) and refinancing of insured Section 236 projects into non-insured Section 236(b) projects.	5/2000	X	.....
259	Reinstatement and Extension of Notice H 95–55, Procedures for Implementing Section 214 of the Housing and Community Development Act of 1980, as amended—Restrictions on Assistance to Noncitizens.	11/30/2002	X	.....
260	Guidelines for Continuation of Interest Reduction Payments after Refinancing: ''Decoupling'', under Section 236(e)(2) and refinancing of insured Section 236 projects into non-insured Section 236(b) projects.	No Date	X	.....
261	Extension of Notice H 95–38 Secondary Financing by Public Bodies for Section 202 and Section 811 Projects.	12/31/2003	X	.....
262	Guidelines for Continuation of Interest Reduction Payments after Refinancing: ''Decoupling'', Under Section 236(e)(2) and Refinancing of Insured Section 236 Projects into Non-Insured Section 236(b) Projects.	5/2000	X	.....
263	Extension of Notice H 01–07, Guidelines for Calculating and Retaining Section 236 Excess Income as clarified by Notice H 02–09, Technical Corrections to Notice H 01–07 issued on May 10, 2002.	5/31/2003	X	.....
264	Reinstatement and Extension of Notice 00–26, Prepayment of Direct Loans on Section 202 and 202/8 Projects with Inclusion of FHA Mortgage Insurance Guidelines.	5/31/2003	X	.....
265	Reinstatement and Extension of Notice 96–19, Telecommunications Service Contracts between Telecommunications Service Providers and Project Owners.	12/31/2004	X	.....
266	Reinstatement and Extension of Notice 97–31, Lead-Based Paint: Notification of Purchasers and Tenants in HUD-Insured, HUD-Held and HUD-Subsidized Housing.	1/31/2006	X	.....
267	Reinstatement and Extension of Notice 97–49, Backing-Out Trustee Sweep Savings Before Calculating AAFs for Projects which Originally Received a Financial Adjustment Factor (FAF) and whose Bonds were Refunded.	12/31/2007	X	.....
268	Guidelines For Continuation of Interest Reduction Payments after Refinancing: ''Decoupling,'' Under Section 236 (e) (2) and Refinancing of Insured Section 236 Projects into Non-Insured Section 236 (b) Projects.	5/2000	X	.....
269	Extension of Notice H 02–14, Guidelines for Calculating and Retaining Section 236 Excess Income as clarified by Notice H 02–09, Technical Corrections to Notice H 01–07 issued May 10, 2002.	7/31/2004	X	.....
270	Compliance with Section 504 of the Rehabilitation Act of 1973 and the Disability/Accessibility Provisions of the Fair Housing Act of 1988.	5/30/2003	X	.....
271	Reinstatement/Extension of Notice H03–23—Office of Management and Budget Mandated Reporting Changes to Race and Ethnicity Categories.	12/31/2005	X	.....
272	Disaster Recovery Guidance by Multifamily Housing After a Presidentially-Declared Disaster.	11/27/2018	X	.....

APPENDIX F—HOUSING/FHA NOTICES AND OTHER GUIDANCE—Continued

	Name of document	Date	Arch	Remove
273	Reinstatement and Extension of HUD Notice 03–17, Guidelines For Continuation of Interest Reduction Payments after Refinancing: ''Decoupling,'' Under Section 236 (e) (2) and Refinancing of Insured Section 236 Projects into Non-Insured Section 236 (b) Projects.	11/0/2005	X	.....
274	Extension of Notice H 03–13, Guidelines for Calculating and Retaining Section 236 Excess Income.	7/31/2004	X	.....
275	Compliance with Section 504 of the Rehabilitation Act of 1973 and the Disability/Accessibility Provisions of the Fair Housing Act of 1988.	5/30/2003	X	.....
276	Revised Prepayment of Direct Loans on Section 202 and Section 202/8 Projects with Inclusion of FHA Mortgage Insurance Guidelines.	8/30/2003	X	.....
277	Enterprise Income Verification (EIV) System	11/2/2018	X	.....
278	Supplemental Information to Application for Assistance Regarding Identification of Family Member, Friend or Other Person or Organization Supportive of a Tenant for Occupancy in HUD Assisted Housing.	5/9/2012	X	.....
279	Eligibility of Projects for Mortgage Insurance where Construction has Started	No Date	X	.....
280	State Lifetime Sex Offender Registration	No Date	X	.....
281	Delegated Processing Procedures	No Date	X	.....
282	Temporary Authority for Multifamily Hubs to Process Waiver Requests Pertaining to the Three-Year Rule for Section 223(f).	2/6/2009	X	.....
283	Guidelines for Assumption, Subordination, or Assignment of Mark-to-Market (M2M) Program Loans in Transfer of Physical Assets (TPA) and Refinance Transactions.	5/5/2012	X	.....
284	Guidelines for Assumption, Subordination, or Assignment of Mark-to-Market (M2M) Program Loans in Transfer of Physical Assets (TPA) and Refinance Transactions.	5/5/2012	X	.....
285	Enterprise Income Verification (EIV) System	11/2/2018	X	.....
286	Fiscal Year 2007 Annual Operating Cost Standards—Section 202 Supportive Housing for the Elderly and Section 811 Supportive Housing for Persons with Disabilities Programs.	10/31/2008	X	.....
287	Guidelines for Assumption, Subordination, or Assignment of Mark-to-Market (M2M) Program Loans in Transfer of Physical Assets (TPA) and Refinance Transactions.	5/5/2012	X	.....
288	Fiscal Year 2007 Policy for Capital Advance Authority Assignments, Instructions and Program Requirements for the Section 202 and Section 811 Capital Advance Programs, Application Processing and Selection Instructions, and Processing Schedule.	No Date	X	.....
289	Fiscal Year 2007 Interest Rate for Section 202 and Section 811 Capital Advance Projects.	5/31/2008	X	.....
290	Guidelines for Continuation of Interest Reduction Payments after Refinancing: Decoupling, Under Section 236(e)(2) and Refinancing of Insured Section 236 Projects into Non-Insured Section 236(b) Projects.	No Date	X	.....
291	Disaster Recovery Guidance by Multifamily Housing After a Presidentially-Declared Disaster.	9/2/2010	X	.....
292	Maintenance of the Claims Without Conveyance of Title (CWCOT) Case Files	No Date	X	.....
293	Closing Agent Services Request for Proposal (RFP) Format (Single Family Property Disposition).	No Date	X	.....
294	Extension of Notice H 91–4 (HUD)—Section 8 Contract Rents—Retroactive Payments	1/31/1993	X	.....
295	Extension of Notice H 91–1 (HUD)—Collection of Overdue Excess Income—Section 236 Multifamily Housing Projects.	1/31/1993	X	.....
296	Permissible Uses of Secondary Financing for Section 202 Projects	No Date	X	.....
297	Single Family Claims for Insurance Benefits: Changes in the Requirements for Preservation and Protection of Insured Properties.	No Date	X	.....
298	Revision & Extension of H 90–83/Instructions to Field Offices on Implementation of Single Family Demonstration Program for Sale of Properties to Nonprofits and Government Entities.	11/28/1990	X	.....
299	Lease and Sale of Acquired Single Family Properties for the Homeless—Housing Responsibilities.	11/30/1994	X	.....
300	Delegated Processing Procedures	No Date	X	.....
301	Processing and Approving the Disposition of HUD-Owned Multifamily Projects	No Date	X	.....
302	Early Warning System for Multifamily Housing Projects	No Date	X	.....
303	Additional Information—Monthly Mortgage Insurance Premium (MIP) Remittances	No Date	X	.....
304	Technical Corrections, Delegated Processing Procedures	7/31/1992	X	.....
305	Reinstatement and extension of Notice H 90–1 (HUD), Secondary Financing by Public Bodies for Section 202 Projects.	6/30/1993	X	.....
306	Delegated Processing Procedures	No Date	X	.....
307	RESCISSION—Acceleration of Mortgages Subject to the Housing and Community Development Act of 1987 and the Department of Housing and Urban Development Reform Act of 1989.	3/31/1992	X	.....
308	Claims Without Conveyance of Title (CWCOT) Deficiency Judgment Bidding and Reimbursement Procedures.	No Date	X	.....
309	Solicitation and Requirements for Single Family Real Estate Asset Management (REAM) Services.	2/28/1997	X	.....
310	Monitoring of Monthly Mortgage Insurance Premium (MIP) Remittances (Limited Scope)	No Date	X	.....
311	Phase-in of Tenant Rents after Plan of Action Implementation	No Date	X	.....
312	Requirement to Provide State and Local Tax Information to Providers in the Single Family Homeless Initiative Program and Start of FY' 93 Inventory Guidelines by Region.	No Date	X	.....

APPENDIX F—HOUSING/FHA NOTICES AND OTHER GUIDANCE—Continued

	Name of document	Date	Arch	Remove
313	Civil Money Penalties Implementation of the HUD Reform Act of 1989	No Date	X	.....
314	Processing HUD Insured Projects Involving Low Income Housing Tax Credits Using Form HUD–92264–T.	12/31/1993	X	.....
315	Fiscal Year 1993 Special Marketing Tools	No Date	X	.....
316	Extension of Notice H 91–100, Permissible Uses of Secondary Financing for Section 202 Projects.	12/31/1993	X	.....
317	Extension of Notice H 91–99, Review of Section 202 Applications for Projects for the Elderly in FY 1990 in Areas with Limited Market Demand.	12/31/199	X	.....
318	Extension of Notice H 91–98, Davis-Bacon Exclusions for Section 202 Group Homes	12/31/1993	X	.....
319	Extension of Notice 91–96, Release of Section 202 Ratings and Rankings	12/31/1993	X	.....
320	Extension of Notice H 91–92 (HUD), Revision & Extension of H 90–83/Instructions to Field Offices on Implementation of Single Family Demonstration Program for Sale of Properties to Nonprofits and Government Entities.	9/30/1993	X	.....
321	Extension of Notice H 91–94, Single Family Claims for Insurance Benefits: Changes in the Requirements for Preservation and Protection of Insured Properties.	12/5/1993	X	.....
322	The Disposition Of Hazard Insurance Proceeds	6/17/1994	X	.....
323	Extension of Notice H 91–88, Delegated Processing Procedures	10/31/1993	X	.....
324	Extension of Notice H 91–91, Lease and Sale of Acquired Single Family Properties for the Homeless—Housing Responsibilities.	11/30/1993	X	.....
325	A new form HUD 9887, Authorization for the Release of Information	10/31/1993	X	.....
326	Processing Applications under the Preservation NOFA for Technical Assistance Planning Grants for Resident Groups, Community Groups, Community-Based Nonprofit Organizations and Resident Councils.	11/30/1995	X	.....
327	Extension of Notice H 91–84, Processing and Approving the Disposition of HUD-Owned Multifamily Projects.	10/31/1993	X	.....
328	Directors and Officers Liability Insurance vs Indemnification By The Corporation	No Date	X	.....
329	Washington Docket And Amortization Schedule For Multifamily Mortgage Insurance Projects.	No Date	X	.....
330	Transmittal of Smoke Detector Final Rule	No Date	X	.....
331	Monitoring Real Estate Asset Managers and Closing Agents	No Date	X	.....
332	Implementing Accountability Monitoring	No Date	X	.....
333	Second Section 221 (g) (4) Project Mortgage Auction	9/30/1993	X	.....
334	Monitoring Mortgagees During On-site Reviews in Compliance with the Provisions of the Housing and Urban Development Act of 1968 as amended—Single Family.	No Date	X	.....
335	Notice of Cancellation of Handbook—4515.02—Rental and Cooperative Housing for Lower Income Tenants—Fiscal Procedure.	8/31/1993	X	.....
336	Notice of Cancellation of Handbook—4515.01—Mortgage Insurance for Lower Income Families, Rehabilitation Housing, Section 235(j).	No Date	X	.....
337	The Interest Rate Reduction Program	No Date	X	.....
338	Extension of Notices H 90–51 and H 91–74, Single Family Property Disposition Pricing of Properties.	8/31/1993	X	.....
339	Extension of Notice 91–75 (HUD), Requests for Payment of Property Disposition Procurement—SAMS 1106 Form, Invoice Transmittal.	8/31/1993	X	.....
340	Extension of Notice 91–63, Extension of Time Requirement for Single Family Claims for Insurance Benefits.	8/31/1993	X	.....
341	Single Family Accounting Management System Internal Controls	No Date	X	.....
342	Revised Lead-Based Paint Hazard Notice and Disclosure Requirements	No Date	X	.....
343	Extension of Notice H 91–79, Early Warning System for Multifamily Housing Projects	8/31/1993	X	.....
344	Final Closing Section 202 Loans	No Date	X	.....
345	Extension of Notice H 91–68, Delegation of Authority to Foreclose Multifamily Mortgages	8/31/1993	X	.....
346	Extension of Notice H 91–59, Resident Initiatives Program for Multifamily Housing	8/31/1993	X	.....
347	Retroactive Section 8 Housing Assistance Payments—Section 801 Of The Housing And Urban Development Reform Act Of 1989.	No Date	X	.....
348	Extension of Notice H 91–31 and H 91–62, Delegated Processing Procedures	8/31/1993	X	.....
349	Processing Instructions for Implementation of the Low Income Housing Preservation and Resident Homeownership Act of 1990 by Housing Development Staff.	No Date	X	.....
350	Extension of Notice H 91–58, Change of Authority to Approve Section 202 Project Name Changes.	7/31/1993	X	.....
351	Extension of Notice H 91–53, Revised Processing Procedures for Projects Involving Relocation in the Section 202 Program.	6/30/1993	X	.....
352	Extension of Notice H 90–1 and H 91–52, Secondary Financing by Public Bodies for Section 202 Projects.	6/30/1993	X	.....
353	Extension of Notice H 90–42 and Notice H 91–46, Field Office Review of Market Need for Multifamily Insurance and Coinsurance.	6/30/1993	X	.....
354	Extension of Single Family Development—Extension of Reciprocity in the Approval of Subdivisions.	6/30/1993	X	.....
355	Extension of Notice, Claims Without Conveyance of Title (CWCOT) Reporting	No Date	X	.....
356	Extensions of Closing Agent Services Request for Proposal (RFP) Format Single Family Property Disposition.	6/30/1993	X	.....
357	Servicing FHA-insured Mortgages Affected by the Los Angeles Riots (April 30, 1992) REGION IX (LOS ANGELES OFFICE ONLY).	5/31/1993	X	.....

APPENDIX F—HOUSING/FHA NOTICES AND OTHER GUIDANCE—Continued

	Name of document	Date	Arch	Remove
358	Extension of Notice H 91–39, Need to Reduce Underwriting Risk on Multifamily Insured and Coinsured and Delegated Processing Projects.	5/31/1993	X	.....
359	Extension of Notice H 91–44, Modification of Certification of Incorporation Guide Form Language.	5/31/1993	X	.....
360	Processing of Applications for Service coordinators in Section 202 Housing and Monitoring of Approved Applications.	No Date	X	.....
361	Extension of Notice H 91–23 (HUD) Claims Without Conveyance of Title (CWCOT)—Deficiency Judgment Bidding and Reimbursement Procedures.	3/31/1993	X	.....
362	Extension of Notice H 91–20, Fraud, Waste and Mismanagement Vulnerability Secretary-Held Mortgages—Section 235.	3/31/1993	X	.....
363	Extension of Notice H 91–24 (HUD), Rescission—Acceleration of Mortgages Subject to the Housing and Community Development Act of 1987 and the Department of Housing and Urban Development Reform Act of 1989.	3/31/1993	X	.....
364	Extension of Notice H 91–34 (HUD), Procedures for Reconveyance and Procedures for Reimbursement to Lenders on Uninsured Cases.	4/25/1993	X	.....
365	Flexible Subsidy Program Instructions	6/21/2020	X	.....
366	Transfer of Physical Assets (TPA) Approvals of Formerly Coinsured Projects with Subsidy (including Section 8 Moderate Rehabilitation, Loan Management Set Aside, Substantial Rehabilitation, Property Disposition Set Aside, etc.) and Coinsured Projects.	4/30/1993	X	.....
367	Processing Instructions for the Fiscal Year 1992 HOPE for Homeownership of Multifamily Units Program (HOPE 2)—Applications for Grants.	No Date	X	.....
368	Extension of Notice H 91–29: Processing Plans of Action Under the Housing Community Development Act of 1987.	3/31/1993	X	.....
369	Extension of Notice H 91–31, Delegated Processing Procedures	3/31/1993	X	.....
370	Extension of Notice H 91–28, Authorization for the Release of Information—Form HUD–9886.	3/31/1993	X	.....
371	Supervisory Review and Management of the Assigned Single Family Mortgage Portfolio (Material Weakness 89–15).	3/31/1993	X	.....
372	Calculating Imputed Income From Assets	3/31/1993	X	.....
373	Extension of Notice H 91–22, Comprehensive MF Servicing Program	3/31/1993	X	.....
374	Extension of Notice H 91–18, Combining Low-Income Housing Tax Credits (LIHTC) with HUD Program.	3/31/1993	X	.....
375	Designation of Authority and Responsibility for Decentralized Single Family Foreclosure Management and Contract Administration.	2/28/1993	X	.....
376	Actions Subsequent to Notification of Funding Approval for the HOPE for Homeownership of Multifamily Units Program (HOPE 2).	1/31/1993	X	.....
377	Supplemental Instructions on Conversion of Section 202/8 Section 162 Fund Reservations to Capital Advances.	12/31/1992	X	.....
378	1992 Annual Operating Cost Standards: Section 202 Supportive Housing for the Elderly and Section 811 Supportive Housing for Persons with Disabilities.	11/30/1992	X	.....
379	Failure to Abide by HUD's Earnest Money Policy	1/31/1992	X	.....
380	Monitoring of FY 1991 and 1992 Special Purpose Grants	10/31/1992	X	.....
381	Clarification of HDG Settlement Procedures	10/31/1992	X	.....
382	Clarification of Solicitation Document for Real Estate Asset Management (REAM) Contracts.	1/31/1993	X	.....
383	Changes to Previous Participation (2530) Procedures	9/30/1992	X	.....
384	1992 Special Purpose Grant Application Reviews	9/30/1992	X	.....
385	Revision to Notice H 91–91, Lease and Sale of Acquired Single Family Properties For the Homeless—Housing Responsibilities.	1/13/1993	X	.....
386	Instructions for Reporting Closings of Section 202 and Section 811 Conversions	8/31/1992	X	.....
387	Section 221(g)(4) Project Mortgage Auction: Amendment of HUD Notice 92–24	8/8/1992	X	.....
388	Instructions for Processing Applications After Selection for Funding—Section 202 Supportive Housing for the Elderly and Section 811 Supportive Housing for Persons with Disabilities.	7/31/1992	X	.....
389	Reinstatement of Housing Development Grant—Project Settlement Procedures	1/31/1993	X	.....
390	Instructions for Providing Documentation of Availability of HUD-owned Properties for HOPE 2 Applicants in FY 1992.	7/31/1992	X	.....
391	System Security Procedures for the Single Family Accounting Management System (SAMS).	No Date	X	.....
392	Federally Mandated Exclusions from Income	5/30/2014	X	.....
393	Reinstatement and Extension of Notice H 92–67 (HUD): The Interest Rate Reduction Program.	9/30/1997	X	.....
394	Fiscal Year 1994 Special Marketing Tools	No Date	X	.....
395	Expedited Section 223(a)(7) Processing Instructions	8/31/1995	X	.....
396	Fiscal Year 1993 Interest Rate For Section 202 and Section 811 Capital Advance Projects.	No Date	X	.....
397	Fiscal Year 1994 Interest Rate For Section 202 and Section 811 Capital Advance Projects.	No Date	X	.....
398	Pilot Program—Single Family Property Disposition Program Referral of Delinquent Former Tenant Accounts to Debt Management Centers.	11/30/1994	X	.....
399	Designation of "Revitalization Areas" for FY '94 in the Single Family Property Disposition Sales Program.	11/30/1994	X	.....

APPENDIX F—HOUSING/FHA NOTICES AND OTHER GUIDANCE—Continued

	Name of document	Date	Arch	Remove
400	Extension of Notice H 92–83 (HUD): Lease and Sale of Acquired Single Family Properties for the Homeless—Housing Responsibilities.	11/30/1994	X	.....
401	Extension of Notice H 92–86, The Disposition of Hazard Insurance Proceeds	11/30/1994	X	.....
402	Modified Sales Procedures Single Family Property Disposition	10/31/1994	X	.....
403	Reinstatement and Extension of Notice H 90–71 (HUD): Maintenance of the Claims Without Conveyance of Title (CWCOT) Case Files.	9/30/1994	X	.....
404	Extension of Notice H 92–84, Delegated Processing Procedures	10/31/1994	X	.....
405	Extension of Notice H 92–78, Processing and Approving the Disposition of HUD-Owned Multifamily Projects.	10/31/1994	X	.....
406	Processing Instructions for the Fiscal Year 1993 HOPE for Homeownership of Multifamily Units Program (HOPE 2)—Applications for Grants.	10/31/1994	X	.....
407	Extension of Notice H 92–82, A new form HUD–9887, Authorization for the Release of Information.	10/31/1994	X	.....
408	Extension of Notice H 92–81, Processing Applications under the Preservation NOFA for Technical Assistance Planning Grants for Resident Groups, Community Groups, Community-Based Nonprofit Organizations and Resident Councils.	10/31/1994	X	.....
409	Reinstatement and Extension of Notice H 92–63 (HUD): Single Family Accounting Management System Internal Controls.	10/31/1994	X	.....
410	Military Base Closings	9/30/1994	X	.....
411	Extension of Notice H 92–75, Washington Docket and Amortization Schedule for Multifamily Mortgage Insurance Projects.	9/30/1994	X	.....
412	Processing of Requests for section 8 Funds for Service Coordinators in Section 202 Housing and Monitoring of Approved Requests—Fiscal Year (FY) 1993/94.	9/30/1994	X	.....
413	Extension of Notice H 92–73 (HUD): Monitoring Real Estate Asset Managers and Closing Agents.	9/30/1994	X	.....
414	Change of Notice Number H 93–62 (HUD): Extension of Notice H 92–62 (HUD), Revised Lead-Based Paint Hazard Notice and Disclosure Requirements, Dated August 24, 1993.	9/30/1994	X	.....
415	Housing for Elderly and Handicapped/Disabled—Capital Advance Programs with Project Rental Assistance Contracts.	9/30/1994	X	.....
416	Changes and Clarifications of Existing Procedures on Compromises and Write-offs of Secretary-held Mortgages.	9/30/1994	X	.....
417	Uses of Residual Receipts by owners of certain nonprofit projects with mortgages insured or held by HUD.	9/7/1994	X	.....
418	Corrections to Handbooks 4571.2 and 4571.3 REV–1 Regarding the Location Analysis for Section 202 and Section 811 Projects.	8/31/1994	X	.....
419	Extension of Notice H 92–59, Delegation of Authority to Foreclose Multifamily Mortgages	8/31/1994	X	.....
420	Extension of Notice H 91–31, H 91–62, and H 92–56, Delegated Processing Procedures	8/31/1994	X	.....
421	Extension of H 92–60 (HUD), Final Closing Section 202 Loans	8/31/1994	X	.....
422	Extension of Notice H 92–61, Early Warning System for Multifamily Housing Projects	8/31/1994	X	.....
423	Lease of HUD-Owned Single Family Properties to State and Local Governments For Use In Law Enforcement.	8/31/1994	X	.....
424	Extension of Notice H 92–57 (HUD), Retroactive Section 8 Housing Assistance Payments—Section 801 of the Housing and Urban Development Reform Act of 1989.	8/31/1994	X	.....
425	Funding Procedures Applicable to Regional Office and Field Office Contracts—FHA, Preservation Preliminary Analyses and Section 202/811.	8/31/1994	X	.....
426	Section 223(d) Operating Loss Loan Procedures for Formerly Coinsured Projects Under Sections 221(d)(3), 221(d)(4) and 232 and Change Regarding Inclusion of Initial Operating Deficit in Operating Loss Loan Processing.	8/31/1994	X	.....
427	Extension of Notice H 92–54, Processing Instructions for Implementation of the Low Income Housing Preservation and Resident Homeownership Act of 1990 by Housing Development.	7/31/1994	X	.....
428	Extension of Notice H 91–58 and H 92–53, Change of Authority to Approve Section 202 Project Name Changes.	7/31/1994	X	.....
429	Extension of Notice H 90–31 (HUD), Closing Agent Services Request for Proposal (RFP) Format (Single Family Property Disposition).	6/30/1994	X	.....
430	Revised Fiscal Year 1993 Policy for Section 202 Application Processing and Selections, Revised Processing Schedule.	7/31/1994	X	.....
431	Revised Fiscal Year 1993 Policy for Section 811 Application Processing and Selections, Revised Processing Schedule.	7/31/1994	X	.....
432	Fiscal Year 1993 Policy for Capital Advance Authority Assignments, Instructions and Additional Program Requirements for the Section 202 and Section 811 Capital Advance Programs.	4/30/1994	X	.....
433	Rescinding Quarterly Reporting for the Single Family Deficiency Judgment Program	6/30/1994	X	.....
434	"Byrd Amendment"—Limitation on Payments made to Influence Certain Federal Financial and Contracting Transactions.	6/30/1994	X	.....
435	Extension of Notice H 92–51, Secondary Financing by Public Bodies for Section 202 Projects.	6/30/1994	X	.....
436	Extension of Notice H 92–50, Field Office Review of Market Need for Multifamily Insurance and Coinsurance.	6/30/1994	X	.....
437	Single Family Claim Reviews	7/31/1994	X	.....

APPENDIX F—HOUSING/FHA NOTICES AND OTHER GUIDANCE—Continued

	Name of document	Date	Arch	Remove
438	Reinstatement and Extension of Notice H 90–17, H 91–18, and H 92–22, Combining Low-Income Housing Tax Credits (LIHTC) with HUD Programs.	6/30/1993	X	.....
439	Form SAMS–1116A, Selling Broker Information and Certification	6/30/1994	X	.....
440	Reserve Fund for Replacement Balances Reported as part of the Mortgagor's Submission and Certification of the Required Independently Audited Annual Financial Statements.	6/30/1994	X	.....
441	Group Homes Funded Under Section 202 and Section 811	6/30/1994	X	.....
442	Start-up Procedures For the Congregate Housing Services Program—FY 1993	5/31/1994	X	.....
443	Housing Development Processing Instructions for the HOME Program	5/31/1994	X	.....
444	Reinstatement and extension of Notice H 91–23 (HUD), Claims Without Conveyance of Title (CWCOT)—Deficiency Judgement Bidding and Reimbursement Procedures.	4/30/1994	X	.....
445	Reinstatement and extension of Notice H 91–34 (HUD), Procedures for Reconveyance and Procedures for Reimbursement to Lenders on Uninsured Cases.	4/30/1994	X	.....
446	Reinstatement and extension of Notice H 91–20 (HUD), Fraud, Waste and Mismanagement Vulnerability Secretary-Held Mortgages—Section 235.	4/30/1994	X	.....
447	Reinstatement and extension of Notice H 91–24 (HUD), Rescission—Acceleration of Mortgages Subject to the Housing and Community Development Act of 1987 and the Department of Housing & Urban Development Reform Act of 1989.	4/30/1994	X	.....
448	Lead-Based Paint: Notification of Tenants in HUD-insured, HUD-held and HUD-subsidized Housing.	4/30/1994	X	.....
449	Definition of Annual Income: Holocaust Reparations	4/30/1994	X	.....
450	Extension of Notice H 92–40 (HUD), Processing of Applications for Service Coordinators in Section 202 Housing and Monitoring of Approved Applications.	4/30/1994	X	.....
451	Reinstatement & Extension of Notice H 92–2 (HUD), Housing Development Grant—Project Settlement Procedures, which expired 1/31/93.	4/30/1994	X	.....
452	Procedures For the Extension of Existing Congregate Housing Services Program (CHSP) Grants Expiring through February 1994.	4/30/1994	X	.....
453	Need to Reduce Underwriting Risk on Multifamily Insured and Coinsured and Delegated Processing Projects and Problem with Summary Rejection of Applications.	4/30/1994	X	.....
454	Close-out of Section 106(b) Nonprofit Sponsor Assistance ''Seed Money'' Loan Program	4/30/1994	X	.....
455	Housing Development Instructions for Processing Plans of Action Under Title II of the Housing and Community Development Act of 1987 and Associated Section 241(f) Loan Applications.	4/30/1994	X	.....
456	Fiscal Year 1993 Interest Rate For Section 202 and Section 811 Capital Advance Projects.	3/31/1994	X	.....
457	Extension of Notice H 92–26 (HUD), Supervisory Review and Management of the Assigned Single Family Mortgage Portfolio (Material Weakness 89–15).	3/31/1994	X	.....
458	Financial Statement Requirement for Sponsors Under the Capital Advance Program	3/31/1994	X	.....
459	Extension and Clarification of Notice H 92–31 (HUD), Revised Processing Instructions for the Section 223(f) Full Insurance Program.	3/25/1994	X	.....
460	Extension of Notice H 91–29 and H 92–30, Processing Plans of Action Under the Housing Community Development Act of 1987.	6/30/1993	X	.....
461	Extension of Notice H 92–25, Calculating Imputed Income from Assets	3/31/1994	X	.....
462	Single Family Development and Management Directive—Revised Section 235(r) Refinance Program.	3/31/1994	X	.....
463	Electronic Data Interchange of Form HUD–27011 and Title Approval Letters	3/31/1994	X	.....
464	Reinstatement and extension of Notice H 91–65 (HUD), Additional Information—Monthly Mortgage Insurance Premium (MIP) Remittances.	2/28/1994	X	.....
465	Extension of Notice H 92–18 (HUD), Designation of Authority and Responsibility for Decentralized Single Family Foreclosure Management and Contract Administration.	2/28/1994	X	.....
466	Extension of Notice H 91–12 (HUD), Solicitation and Requirements for Single Family Real Estate Asset Management (REAM) Services.	2/28/1994	X	.....
467	Extension of Notice H 91–6 (HUD), Monitoring of Monthly Mortgage Insurance Premium (MIP) Remittances (limited Scope).	2/28/1994	X	.....
468	Application Review and Selection Procedures For the Congregate Housing Services Program—FY 1993.	3/31/1994	X	.....
469	Policy And Procedural Guidelines For Paying Taxes Through SAMS And The Service Center.	2/28/1994	X	.....
470	Sale of HUD Owned Properties to HOPE 3 Grant Recipients	11/9/1992	X	.....
471	1993 Annual Operating Cost Standards: Section 202 Supportive Housing for the Elderly and Section 811 Supportive Housing for Persons with Disabilities.	12/31/1993	X	.....
472	Instructions for Use of the Line of Credit Control System/Voice Response System (LOCCS/VRS) for the Congregate Housing Services Program (CHSP).	12/31/1993	X	.....
473	Extension of Notice H 92–5 (HUD), Revision to Notice H 91–91, Lease and Sale of Acquired Single Family Properties for the Homeless—Housing Responsibilities.	1/31/1994	X	.....
474	Instructions for Providing Documentation of Availability of HUD-owned Properties for HOPE 2 Applicants in FY 1993.	11/30/1993	X	.....
475	Extension of Notice H 92–8 (HUD), Clarification of Solicitation Document for Real Estate Asset Management (REAM) Contracts.	1/13/1993	X	.....
476	Title VI, subtitle D, of the Housing and community Development Act of 1992, Authority to Provide Preferences for Elderly Residents and Units for Disabled Residents in Certain Section 8 Assisted Housing.	8/31/1993	X	.....

APPENDIX F—HOUSING/FHA NOTICES AND OTHER GUIDANCE—Continued

	Name of document	Date	Arch	Remove
477	Extension of Notice H 92–10 (HUD), Failure to Abide by HUD's Earnest Money Policy ...	1/31/1994	X	.....
478	Actions Subsequent to Notification of Funding Approval for Preservation Technical Assistance Planning Grants.	5/31/1993	X	.....
479	Extension of Notice H 91–70, Multifamily Housing Workload Priorities	4/12/1993	X	.....
480	Acceptable Tax Exempt Status Documentation for Section 202 and Section 811 Capital Advance Projects.	5/31/1993	X	.....
481	Reinstatement and Extension of Notice H 93–86 (HUD), Pilot Program—Single Family Property Disposition Program Referral of Delinquent Former Tenant Accounts to Debt Management Centers.	12/31/1995	X	.....
482	Section 223(d)(3) Expansion of the Operating Loss Loan Program—10-Year Loan	12/31/1995	X	.....
483	Refunding of Bonds Issued to Finance Section 8 Financing Adjustment Factor Projects ..	12/131/1995	X	.....
484	Single Family Property Disposition Homeless Program Fiscal Year 1995 Exception Offices.	12/31/1995	X	.....
485	Fiscal Year 1995 Interest Rate For Section 202 and Section 811 Capital Advance Projects and Corrections to Notices H 93–87 and H 93–88.	11/30/1995	X	.....
486	Instructions for Intermediaries Processing Applications under the Preservation NOFA for Technical Assistance Planning Grants for Resident Groups, Community-Based Housing Developers and Resident Councils.	11/30/1995	X	.....
487	Extension of Notice H 93–89 HUD, Expedited 223(a)(7) Processing Instructions	11/30/1995	X	.....
488	Submission of Environmental Site Assessment Transaction Screen Process and Phase I Environmental Site Assessment Process.	10/31/1995	X	.....
489	Surveyor Identification of Gas and Hazardous Liquids Pipelines Regulated by 49 CFR parts 192 and 195, and A&E Collection of Pipeline Operator Compliance Certifications.	10/31/1995	X	.....
490	1. Servicing Insured HECM Mortgages	10/31/1995	X	.....
491	2. HECM Assignment Processing	10/31/1995	X	.....
492	3. Servicing Secretary-held HECM Mortgages	10/31/1995	X	.....
493	Extension of Notice H 93–80, Delegated Processing Procedures	10/31/1995	X	.....
494	Extension of Notice H 93–76, Processing Applications under the Preservation NOFA for Technical Assistance Planning Grants for Resident Groups, Community Groups, Community-Based Nonprofit Organizations and Resident Councils.	10/31/1995	X	.....
495	Extension of Notice H 93–79, Processing and Approving the Disposition of HUD-Owned Multifamily Projects.	10/31/1995	X	.....
496	Extension of Notice H 93–73 (HUD), Military Base Closings	10/31/1995	X	.....
497	Extension of Notice H 93–66 (HUD), Changes and Clarifications of Existing Procedures on Compromises and Write-offs of Secretary-held Mortgages.	10/31/1995	X	.....
498	Section 8 Rents that Exceed 120 percent of the Fair Market Rents in Low Income Housing Preservation and Resident Homeownership Act (LIHPRHA) Projects.	9/30/1995	X	.....
499	Fiscal Year 1995 Special Marketing Tools	9/30/1995	X	.....
500	Recapture of Section 235 Assistance Payments Guide (For Field Office Use Only)	9/30/1995	X	.....
501	Extension of Notice H 93–58 (HUD), Lease of HUD-Owned Single Family Properties to State and Local Governments for Use In Law Enforcement.	8/31/1995	X	.....
502	Extension of Notice H 93–55 (HUD), Funding Procedures Applicable to Regional Office and Field Office Contracts—FHA, Preservation Preliminary Analyses and Section 202/811.	8/31/1995	X	.....
503	Extension of Notice H 93–61, Delegated Processing Procedures	8/31/1995	X	.....
504	Extension of H 93–64 (HUD), Corrections to Handbooks 4571.2 and 4571.3 REV–1 Regarding the Location Analysis for Section 202 and Section 811 Projects.	8/31/1995	X	.....
505	Extension of H 93–60 (HUD), Final Closing Section 202 loans	8/31/1995	X	.....
506	Extension of Notice H 93–59, Early Warning System for Multifamily Housing Projects	8/31/1995	X	.....
507	Interest Rate Reduction on Secretary-held Mortgages	8/31/1995	X	.....
508	Extension of Notice H 93–54 (HUD), Section 223(d) Operating Loss Loan Procedures for Formerly Coinsured Projects Under Sections 221(d)(3), 221(d)(4) and 232 and Change Regarding Inclusion of Initial Operating Deficit in Operating Loss Loan Processing.	8/31/1995	X	.....
509	Extension of Notice H 93–57 (HUD), Retroactive Section 8 Housing Assistance Payments—Section 801 of the Housing and Urban Development Reform Act of 1989.	8/31/1995	X	.....
510	Expedited Section 223(a)(7) Processing Instructions For Coinsured Projects	8/31/1995	X	.....
511	Extension of Notice H 93–62, Delegation of Authority to Foreclose Multifamily Mortgages	8/31/1995	X	.....
512	Extension of Notice H 93–50, Change of Authority to Approve Section 202 Project Name Changes.	8/31/1995	X	.....
513	Extension of Notice H 93–41, Field Office Review of Market Need for Multifamily Insurance and Coinsurance.	6/30/1995	X	.....
514	Extension of Notice H 93–36, Group Homes Funded under Section 202 and Section 811	6/30/1995	X	.....
515	Revised Processing Procedures And Timetable For The Application Submission, Review, Rating, Ranking, Selection And Grant Processing Procedures For The Congregate Housing Services Program (CHSP) For FY 1994.	6/30/1995	X	.....
516	Extension of Notice H 93–38 (HUD), Form SAMS–1116A, Selling Broker Information and Certification.	6/30/1995	X	.....
517	Extension of Notice H 90–31 (HUD), Closing Agent Services Request for Proposal (RFP) Format (Single Family Property Disposition).	6/30/1995	X	.....

APPENDIX F—HOUSING/FHA NOTICES AND OTHER GUIDANCE—Continued

	Name of document	Date	Arch	Remove
518	Fiscal Year 1994 Policy for Capital Advance Authority Assignments, Instructions and Additional Program Requirements for the Section 202 and Section 811 Capital Advance Programs, Section 202 and Section 811 Application Processing and Selection Instructions, Processing Schedule.	2/28/1995	X	.....
519	SFPD Modified Sales Procedures	6/30/1995	X	.....
520	Revisions to the SFPD Homeless Initiative Program	6/30/1995	X	.....
521	Mid-Course Correction II—For Low Income Housing Preservation and Resident Homeownership (LIHPRHA) and Emergency Low Income Housing Preservation Act (ELIHPA) Programs.	6/30/1995	X	.....
522	Instructions for the Use of the Line of Credit Control System/Voice Response System (LOCCS/VRS) for the Congregate Housing Services Program (CHSP).	5/31/1995	X	.....
523	Supplemental Claims	5/31/1995	X	.....
524	Extension of Notice H 93–35, Start-up Procedures For the Congregate Housing Services Program—FY 1993.	5/31/1995	X	.....
525	Extension of Notice H 93–34, Housing Development Processing Instructions for the HOME Program.	5/31/1995	X	.....
526	Reinstatement and Extension of Notice H 93–28, Definition of Annual Income: Holocaust	5/31/1995	X	.....
527	Reinstatement and extension of Notice H 93–26, Housing Development Grant—Project Settlement Procedures.	5/31/1995	X	.....
528	Reinstatement and extension of Notice H 93–23, Need to Reduce Underwriting Risk on Multifamily Insured and Coinsured and Delegated Processing Projects and Problem with Summary Rejection of Applications.	5/31/1995	X	.....
529	Reinstatement and extension of Notice H 93–25, Procedures for the Extension of Existing Congregate Housing Services Program (CHSP) Grants Expiring through February 1994.	5/31/1995	X	.....
530	Reinstatement and extension of Notice H 93–22, Close-out of Section 106(b) Nonprofit Sponsor Assistance ''Seed Money'' Loan Program.	5/31/1995	X	.....
531	Extension of Notice H 91–23 (HUD Claims Without Conveyance of Title (CWCOT)—Deficiency Judgement Bidding and Reimbursement Procedures.	5/31/1995	X	.....
532	Extension of Notice H 91–20 (HUD), Fraud, Waste and Mismanagement Vulnerability Secretary-Held Mortgages—Section 235.	4/30/1995	X	.....
533	Special Rent Adjustment for Non-Drug Related Crime Prevention/Security Measures under the ''or Similar Costs'' Statutory Language for Section 8 Rents Based on the Annual Adjustment Factor (AAF).	4/30/1995	X	.....
534	Revised Fiscal Year 1994 Policy for Section 202 Application Processing and Selections, Revised Section 202 Processing Schedule.	4/30/1995	X	.....
535	Amendment to Notice H–94–15 for Temporary Relocation Housing Requirements and Additional Guidance for Flexible Subsidy for Eligible Multifamily Preservation (LIHPRHA and ELIHPA) Properties—HUD Earthquake Loan Program (HELP).	4/30/1995	X	.....
536	Correction To Notice H 94–14 (HUD) Application Submission, Review, Rating, Ranking, Selection And Grant Processing Procedures For The Congregate Housing Services Program (CHSP) For FY 1994.	4/30/1995	X	.....
537	Fiscal Year 1994 Request for Grant Application (RFGA) for Housing Counseling	4/30/1995	X	.....
538	Monitoring Responsibilities Of Government Technical Representatives (GTRs)/Government Technical Monitors (GTMs) Under The Congregate Housing Services Program (CHSP).	4/30/1995	X	.....
539	Processing of Requests for Section 8 Funds for Service Coordinators in Section 8 (including Farmers Home 515/8), Sections 202, 202/8, 221(d) and 236 Projects and Monitoring of Approved Requests—Fiscal Year (FY) 1994.	3/31/1995	X	.....
540	Implementation of Section 6 of the HUD Demonstration Act of 1993: Section 8 Community Investment Demonstration Program.	3/31/1995	X	.....
541	Extension of Notice H 93–17, Extension and Clarification of Notice H 92–31, Revised Processing Instructions for the Section 223(f) Full Insurance Program.	3/31/1995	X	.....
542	Extension of Notice H 93–15, Calculating Imputed Income from Assets	3/31/1995	X	.....
543	Implementation of the Special Allocation for Flexible Subsidy—HUD Earthquake Loan Program (HELP).	3/31/1995	X	.....
544	Application Submission, Review, Rating, Ranking, Selection And Grant Processing Procedures For The Congregate Housing Services Program (CHSP) For FY 1994.	3/31/1995	X	.....
545	Reinstatement and Extension of Notice H 91–6 (HUD), Monitoring of Monthly Mortgage Insurance Premium (MIP) Remittance (Limited Scope) and Notice H 91–65 (HUD), Additional Information—Monthly Mortgage Insurance Premium (MIP) Remittances.	3/31/1995	X	.....
546	Reinstatement and Extension of Notice H 92–18 (HUD), Designations of Authority and Responsibility for Decentralized Single Family Foreclosure Management and Contract Administrations.	3/31/1995	X	.....
547	Extension of Notice H 91–12 (HUD): Solicitation and Requirements for Single Family Real Estate Asset Management (REAM) Services.	2/28/1995	X	.....
548	Extension of Notice H 93–7: Policy and Procedural Guidelines for Paying Taxes Through SAMS and The Service Center.	2/28/1995	X	.....
549	Review Checklist for Preservation Appraisal(s) under Title II of the Emergency Low Income Housing Preservation Act of 1987 (ELIHPA) and Title VI of the Low Income Housing Preservation and Resident Homeownership Act of 1990 (LIHPRHA).	2/28/1995	X	.....
550	Elderly Persons and Persons with Disabilities in Assisted Housing—Population Mix	2/28/1995	X	.....

APPENDIX F—HOUSING/FHA NOTICES AND OTHER GUIDANCE—Continued

	Name of document	Date	Arch	Remove
551	Reinstatement and Extension of Notice H 92–5 (HUD) Revision to Notice H 91–91, Lease and Sale of Acquired Single Family Properties For the Homeless—Housing Responsibilities.	2/28/1995	X	.....
552	Reinstatement and extension of Notice 92–10 (HUD), Failure to abide by HUD's Earnest Money Policy.	2/28/1995	X	.....
553	Reinstatement and Extension of Notice H 92–97 (HUD), Processing HUD Insured Projects Involving Low Income Housing Tax Credits Using Form HUD–92264–T.	2/28/1995	X	.....
554	Extension of Notice H 92–8 (HUD), Clarification of Solicitation Document for Real Estate Asset Management (REAM) Contracts.	1/31/1995	X	.....
555	Reinstatement and Extension of Notice H 92–98 (HUD) Civil Money Penalties Implementation of the HUD Reform Act of 1989.	1/31/1995	X	.....
556	1994 Annual Operating Cost Standards—Section 202 Supportive Housing for the Elderly and Section 811 Supportive Housing for Persons with Disabilities.	1/31/1995	X	.....
557	Reminder to Appraisers to Consider Applicability of State and Local Laws (Rent Control, etc.), in their Estimation of the Value of Properties Without Federal Participation Under Title II of the Housing and Community Development Act of 1987, the Emergency Low Income Housing Preservation Act of 1987.	1/31/1995	X	.....
558	Extension of Notice H 94–91, Instructions for Intermediaries Processing Applications under the Preservation NOFA for Technical Assistance Planning Grants for Resident Groups, Community-Based Housing Developers and Resident Councils.	11/30/1996	X	.....
559	Extension of Notice H 94–90, Expedited 223(a) (7) Processing Instructions	11/30/1996	X	.....
560	Fiscal Year 1996 Interest Rate For Section 202 and Section 811 Capital Advance Projects.	11/30/1996	X	.....
561	New HUD Single Family Nonjudicial Foreclosure Statute	11/30/1996	X	.....
562	Fiscal Year 1996 Special Marketing Tools	11/30/1996	X	.....
563	Extension of Notice H 94–87, Surveyor Identification of Gas and Hazardous Liquids Pipelines Regulated by 49 CFR parts 192 and 195, and A&E Collection of Pipeline Operator Compliance Certifications.	10/31/1996	X	.....
564	Extension of Notice H 94–85, Delegated Processing Procedures	10/31/1996	X	.....
565	Extension of Notice H 94–84, Processing Applications under the Preservation NOFA for Technical Assistance Planning Grants for Resident Groups, Community Groups, Community-Based Nonprofit Organizations and Resident Councils.	10/31/1996	X	.....
566	Extension of Notice H 94–83, Processing and Approving the Disposition of HUD-Owned Multifamily Projects.	10/31/1996	X	.....
567	Extension of Notice H 94–79, Start-Up Procedures for Congregate Housing Services Program (CHSP)—FY 1994.	10/31/1996	X	.....
568	Reinstatement and Extension of Notice H 90–31, Closing Agent Services Request for Proposal (RFP) Format Single Family Property Disposition.	10/31/1996	X	.....
569	Reinstatement and Extension of Notice H 94–74 (HUD), Revisions to Single Family Property Disposition Sales Procedures.	10/31/1996	X	.....
570	Extension of Notice H 94–66 (HUD), Recapture of Section 235 Assistance Payments Guide (For Field Office Use Only).	10/31/1996	X	.....
571	Extension of Notice H 94–71, The Extension, Amendment and Close-Out Process for Congregate Housing Services Program (CHSP Grants).	9/30/1996	X	.....
572	Extension of Notice H 94–70, Washington Docket and Amortization Schedule for Multifamily Mortgage Insurance Projects.	9/30/1996	X	.....
573	Use of Single Family Acquired Properties by Law Enforcement Agencies for Operation Safe Home.	11/30/1996	X	.....
574	Computerized Community Connections—How to Develop Computerized Learning Centers in HUD Insured and Assisted Housing.	9/30/1996	X	.....
575	Revised Definition of Income—Addition of Nine Exclusions to Annual Income	9/30/1996	X	.....
576	Extension of Notice H 93–58 (HUD), Lease of HUD-Owned Single Family Properties to State and Local Governments for Use In Law Enforcement.	9/30/1996	X	.....
577	Funding Of Comprehensive Needs Assessments (CNAs), FY 1995	8/31/1996	X	.....
578	Extension of Notice H 94–55, Delegation of Authority to Foreclosure Multifamily Mortgages.	8/31/1996	X	.....
579	Extension of Notice H 94–63, Delegated Processing Procedures	8/31/1996	X	.....
580	Extension of H 94–62, Corrections to Handbooks 4571.2 and 4571.3 REV–1 Regarding the Location Analysis for Section 202 and Section 811 Projects.	8/31/1996	X	.....
581	Extension of H 94–61, Final Closing Section 202 Loans	8/31/1996	X	.....
582	Extension of Notice H 94–56, Expedited Section 223(a)(7) Processing Instructions for Coinsured Projects.	8/31/1996	X	.....
583	Extension of Notice H 94–58, Section 223(d) Operating Loss Loan Procedures for Formerly Coinsured Projects Under Sections 221(d)(3), 221(d)(4) and 232 and Change Regarding Inclusion of Initial Operating Deficit in Operating Loss Loan Processing.	8/31/1996	X	.....
584	Extension of Notice H 94–60, Early Warning System for Multifamily Housing Projects	8/31/1996	X	.....
585	Processing Instructions for the Recording of Recaptures of Financing Adjustment Factor (FAF) Funds/McKinney Act Funds in the Program Accounting System (PAS) when the Housing Assistance Payments Contract/Annual Contributions Contract (HAPC/ACC) Amendment Method of Savings Sharing is Used.	8/31/1996	X	.....

APPENDIX F—HOUSING/FHA NOTICES AND OTHER GUIDANCE—Continued

	Name of document	Date	Arch	Remove
586	Revisions to Notice H 95–55—Procedures for implementing Section 214 of the Housing and Community Development Act of 1980, as amended—Restrictions on Assistance to Noncitizens.	8/31/1996	X	.....
587	Operating Cost Adjustment Factors (OCAF)	7/31/1996	X	.....
588	Requirements for Accepting Limited Liability Companies and Partnerships as Mortgagor Entities for Insured Multifamily Housing Projects.	7/31/1996	X	.....
589	Loss Mitigation Job Aid: Educational Supplement to Outstanding Handbook Procedures	7/31/1996	X	.....
590	Extension of Notice H 94–49 (HUD), 1992 Amendments to the Single Family Regulations.	7/31/1996	X	.....
591	Elimination of Monetary Limits for Field Office Approval of Compromises and Write-offs of Secretary-Held Mortgages.	7/31/1996	X	.....
592	Extension of Notice H 94–49 (HUD), 1992 Amendments to the Single Family Regulations.	7/30/1996	X	.....
593	Revision of Housing Development Grant—Project Settlement Procedures	7/30/1996	X	.....
594	Extension of Notice H 94–43 (HUD), Revision to the SFPD Homeless Initiative Program	7/30/1996	X	.....
595	Extension of Notice H 94–51, Field Office Review of Market Need for Multifamily Insurance and Coinsurance.	7/30/1996	X	.....
596	Extension of Notice H 94–50, Group Homes Funded Under Section 202 and Section 811.	7/30/1996	X	.....
597	Procedures for implementing Section 214 of the Housing and Community Development Act of 1980, as amended—Restrictions on Assistance to Noncitizens.	6/30/1996	X	.....
598	Extension of Notice H 94–41, Instructions for the Use of the Line of Credit Control System/Voice Response System (LOCCS/VRS) for the Congregate Housing Services Program (CHSP).	5/31/1996	X	.....
599	Extension of Notice H 94–38, Housing Development Processing Instructions for the HOME Program.	5/31/1996	X	.....
600	Extension of Notice H 94–36, Definition of Annual Income: Holocaust	5/31/1996	X	.....
601	Extension of Notice H 94–35—Housing Development Grant—Project Settlement Procedures.	5/31/1996	X	.....
602	Extension of Notice H 94–34—Need to Reduce Underwriting Risk on Multifamily Insured and Coinsured and Delegated Processing Projects and Problem with Summary Rejection of Applications.	5/31/1996	X	.....
603	Fiscal Year 1995 Policy for Capital Advance Authority Assignments, Instructions and Additional Program Requirements for the Section 202 and Section 811 Capital Advance Programs, Section 202 and Section 811 Application Processing and Selection Instructions, Processing Schedule.	5/31/1996	X	.....
604	Extension of Notice H 94–31—Development Instructions for Processing Plans of Action Under Title II of the Housing and Community Development Act of 1987 and Associated Section 241(f) Loan Applications.	5/31/1996	X	.....
605	1995 Annual Operating Cost Standards—Section 202 Supportive Housing for the Elderly and Section 811 Supportive Housing for Persons with Disabilities.	5/31/1996	X	.....
606	Correction To Notice H–95–30—Application Submission, Review, Rating, Ranking, Selection And Grant Processing Procedures For The Congregate Housing Services Program (CHSP) For FY 1995.	5/31/1996	X	.....
607	Changes to the FHA Single Family Maximum Mortgage Limits	5/31/1996	X	.....
608	Revisions to the Single Family Property Disposition Homeless Program	4/30/1996	X	.....
609	Extension of Notice H 94–27, Special Rent Adjustment for Non-Drug Related Crime Prevention/Security Measures under the ''in Similar Costs'' Statutory Language for Section 8 Rents Based on the Annual Adjustment Factor (AAF).	4/30/1996	X	.....
610	Extension of Notice H 91–6 (HUD), Monitoring of Monthly Mortgage Insurance Premium (MIP) Remittance (Limited Scope) and Notice H 91–65 (HUD), Additional Information—Monthly Mortgage Insurance Premium (MIP) Remittances.	4/30/1996	X	.....
611	Comprehensive Needs Assessments—CNAs Initial Surveys	4/0/1996	X	.....
612	Processing Shallow Rental Subsidy for Low-Income Housing Preservation and Resident Homeownership Act Properties.	5/31/1996	X	.....
613	Extension of Notice H 94–21, Monitoring Responsibilities of Government Technical Representatives/Government Technical Monitors Under the Congregate Housing Services Program.	5/31/1996	X	.....
614	Extension of Notice 94–19, Implementation of Section 6 of the HUD Demonstration Act of 1993: Section 8 Community Investment Demonstration Program.	5/31/1996	X	.....
615	Extension of Notice H 94–16, Calculating Imputed Income From Assets	5/31/1996	X	.....
616	Extension of Notice H 94–15, Implementation of the Special Allocation for Flexible Subsidy—HUD Earthquake Loan Program (HELP).	5/31/1996	X	.....
617	Production Branch Instructions to Process Section 241 Loan Applications Pursuant to Title VI of the Low Income Housing Preservation and Resident Homeownership Act of 1990 Plan of Action Stage.	9/30/1995	X	.....
618	Addendum to Notice H 94–91 (HUD), Instructions for Intermediaries Processing Applications under the Preservation NOFA for Technical Assistance Planning Grants for Resident Groups, Community-Based Housing Developers and Resident Councils.	9/30/1995	X	.....
619	Annual Adjustment Factor Rent Increase Requirements Pursuant to the Housing Appropriations Act of 1995.	9/30/1995	X	.....

APPENDIX F—HOUSING/FHA NOTICES AND OTHER GUIDANCE—Continued

	Name of document	Date	Arch	Remove
620	Extension of Notice H 94–9 (HUD), Review Checklist for Preservation Appraisal(s) under Title II of the Emergency Low Income Housing Preservation Act of 1987 (ELIHPA) and Title VI of the Low Income Housing Preservation and Resident Homeownership Act of 1990 (LIHPRHA).	2/29/1996	X	.....
621	Extension of Notice H 94–8, Elderly Persons and Persons with Disabilities in Assisted Housing—Population Mix.	2/29/1996	X	.....
622	Extension of Notice H 94–4 (HUD), Processing HUD Insured Projects Involving Low Income Housing Tax Credits Using Form HUD–92264–T.	2/29/1996	X	.....
623	Summary of HUD Policies on Multifamily Housing Bond Refunding Transactions and Announcement of Certain Changes and Clarifications.	2/29/1996	X	.....
624	Extension of Notice H 94–01, Reminder to Appraisers to Consider Applicability of State and Local Laws (Rent Control, etc.), in their Estimation of the Value of Properties Without Federal Participation Under Title II of the Housing and Community Development Act of 1987, the Emergency Low Income Housing Preservation Act of 1987.	2/29/1996	X	.....
625	Designation of FY '95 Revitalization Areas	1/31/1996	X	.....
626	Subsidy Layering Reviews (SLRs)—Implementing Instructions	1/31/1996	X	.....
627	Reinstatement and Extension of Notice H 92–67 (HUD), The Interest Rate Reduction Program.	1/31/1996	X	.....
628	Preservation Processing	12/21/1995	X	.....
629	Implementation of Section 6 of the HUD Demonstration Act of 1993: Section 8 Community Investment Demonstration Program—Fiscal Year 1995.	1/31/1996	X	.....
630	Temporary Suspension of New Leases under the Single Family Property Disposition Homeless Program, Lease with Option to Purchase.	No Date	X	.....
631	Extension of Notice H 95–102, Expedited Section 223 (a) (7) Processing Instructions	12/31/1997	X	.....
632	Reinstatement and Extension of Notice H 95–97, Delegated Processing Procedures	12/31/1997	X	.....
633	Reinstatement and Extension of Notice H 95–98. Surveyor Identification of GAS and Hazardous Liquids Pipelines Regulated by 49 CFR parts 192 and 195, and A&E Collection of Pipeline Operator Compliance Certifications.	12/31/1997	X	.....
634	Redesigned Section 202 Supportive Housing for the Elderly and Section 811 Supportive Housing for Persons with Disabilities Programs—Firm Commitment Processing to Final Closing.	12/31/1997	X	.....
635	Extension of Notice 95–82 (HUD), Use of Single Family Acquired Properties by Law Enforcement Agencies for Operation Safe Home.	11/30/1997	X	.....
636	Correction to Notice H 96–91 (Extension of HUD Notice H 95–99, Fiscal Year 1996 Special Marketing Tools).	11/30/1997	X	.....
637	Refinancing of Multifamily HUD-Held Loans Sold in Note Sales	11/30/1997	X	.....
638	Suspension Of Reserve For Replacement Releases By Mortgagees	11/30/1997	X	.....
639	Supplement To Notice H96–89	11/30/1997	X	.....
640	Reinstatement and Extension of Notice H 95–89 (HUD), Revisions to Single Family Property Disposition Sales Procedures.	11/30/1997	X	.....
641	Single Family Property Disposition Program—New Initiatives Relating to Lead-Based Paint Hazards.	11/30/1997	X	.....
642	Fiscal Year 1997 Interest Rate for Section 202 and Section 811 Capital Advance Projects.	10/31/1997	X	.....
643	Extension of HUD Notice H 95–99, Fiscal Year 96 Special Family Housing, HS	10/31/1997	X	.....
644	FY97 HUD Appropriations Act	10/31/1997	X	.....
645	Revisions to Notices H 95–55 and 95–68—Procedures for implementing Section 214 of the Housing and Community Development Act of 1980, as amended—Restrictions on assistance to Noncitizens.	10/31/1997	X	.....
646	Extension of Notice H 95–85, Washington Docket and Amortization Schedule for Multifamily Mortgage Insurance Projects.	9/30/1997	X	.....
647	Extension of Notice H 95–81, Computerized Community Connections—How to Develop Computerized Learning Centers in HUD Insured and Assisted Housing.	9/30/1997	X	.....
648	Reinstatement and Extension of Notice H 92–67, The Interest Rate Reduction Program	9/30/1997	X	.....
649	Extension of Notice H 94–66 (HUD), Recapture of Section 235 Assistance Payments Guide (For Field Office Use Only).	9/30/1997	X	.....
650	Extension of Notice H 95–79 (HUD), Single Family Property Disposition/Real Estate Owned Preservation and Protection—Debris Removal.	9/30/1997	X	.....
651	Financing Energy Conservation Measures In HUD-Assisted HUD-Insured Multifamily Housing.	9/30/1997	X	.....
652	Supplement to Notice H 96–45, Revised Procedures for Review and Approval of Waivers of Directives.	9/30/1997	X	.....
653	Extension of Notice H 93–58 (HUD), Lease of HUD-Owned Single Family Properties to State and Local Governments for Use In Law Enforcement.	9/30/1997	X	.....
654	Project-Based Section 8 Contract Expiring In Fiscal Year 97	8/31/1997	X	.....
655	Corrections to Notice H–96–53—Fiscal Year 1996 Policy for Capital Advance Authority Assignments, Instructions and Additional Program Requirements for the Section 202 and Section 811 Capital Advance Programs Section 202 and Section 811 Application Processing and Selection Instructions Processing Schedule.	8/31/1997	X	.....
656	Public Housing Homeownership Initiative	8/31/1997	X	.....
657	Extension of Notice H 95–76, Delegation of Authority to Foreclosure Multifamily Mortgages.	8/31/1997	X	.....

APPENDIX F—HOUSING/FHA NOTICES AND OTHER GUIDANCE—Continued

	Name of document	Date	Arch	Remove
658	Extension of Notice H 95–73, Final Closing Section 202 Loans	8/31/1997	X	.....
659	Extension of Notice H 95–72, Expedited Section 223(a) (7) Processing Instructions for Coinsured Projects.	8/31/1997	X	.....
660	Extension of Notice H 95–71, Section 223(d) Operating Loss Loan Procedures for Formerly Coinsured Projects Under Sections 221(d) (3), 221(d) (4) and 232 and Change Regarding Inclusion of Initial Operating Deficit in Operating Loss Loan Processing.	8/31/1997	X	.....
661	Extension of Notice H 95–70, Early Warning System for Multifamily Housing Projects	8/31/1997	X	.....
662	Nonprofit Services and Fees in New Construction and Substantial Rehabilitation Projects Financed with Multifamily Mortgage Insurance.	7/31/1997	X	.....
663	Condominium Units and Cooperatives under Section 811	7/31/1997	X	.....
664	Extension of Notice H 95–64, Loss Mitigation Job Aid: Educational Supplement to Outstanding Handbook Procedures.	7/31/1997	X	.....
665	Extension of Notice H 95–53 (HUD)—Revised Procedures for Determining Median House Sales Price and Establishing FHA Single Family Maximum Mortgage Limits for High Cost Areas.	7/31/1997	X	.....
666	Extension of Notice H 94–43 (HUD), Revision to the SFPD Homeless Initiative Program	7/31/1997	X	.....
667	Extension of Notice H 95–62 (NOD), Elimination of Monetary Limits for Field Office Approval of Compromises and Write-offs or Secretary-Held Mortgages.	6/30/1997	X	.....
668	Extension of Notice H 95–55—Procedures for Implementing Section 214 of the Housing and Community Development Act of 1980, As Amended—Restrictions on Assistance to Noncitizens.	6/30/1997	X	.....
669	Extension of Notice H 95–50, Housing Development Processing Instructions for the HOME Program.	6/30/1997	X	.....
670	Single Family Property Disposition Program—Disclosure Requirements Related to Obtaining A Home Inspection.	6/30/1997	X	.....
671	Extension of Notice H 95–48, Definition of Annual Income: Holocaust	6/30/1997	X	.....
672	Extension of Notice H 95–46. Need to Reduce Underwriting Risk on Multifamily Insured and Coinsured and Delegated Processing Projects and Problem with Summary Rejection of Applications.	6/30/1997	X	.....
673	Instructions for Use of the Line of Credit Control System/Voice Response System (LOCCS/VRS) for the Congregate Housing Services Program (CHSP).	5/31/1997	X	.....
674	Extension of Notice H 95–44, Close-out of Section 106(b) Nonprofit Sponsor Assistance ''Seed Money'' Loan Program.	5/31/1997	X	.....
675	Extension of Notice H 95–41, Cost Certification Review	5/31/1997	X	.....
676	Exclusion Of Income Received Under Training Programs In Multifamily Housing Programs.	5/31/1997	X	.....
677	Reinstatement and Extension of Notice H 94–99—Processing of Requests for Section 8 Funds for Service Coordinators in Section 8 (including Section 515/8 of the Rural Housing and Community Development Services (RHCDS)), Sections 202/8, 221(d) (3) and 236 projects and Monitoring of Approved Requests Fiscal Year (FY) 1995.	5/31/1997	X	.....
678	Reinstatement and Extension of Notice H 94–98—Funding a Service Coordinator in Eligible Housing Projects for Elderly, Disabled, or Families by Using Residual Receipts, Budget-Based Rent Increases or Special Adjustments.	5/31/1997	X	.....
679	Section 8 New Construction and Substantial Rehabilitation, all Section 8 Loan Management Set Aside (LMSA) and Property Disposition (PD) Contracts in which the method of rent adjustment is the Annual Adjustment Factor.	5/31/1997	X	.....
680	Extension of Notice H 91–20 (HUD), Fraud, Waste and Mismanagement Vulnerability Secretary-Held Mortgages—Section 235.	5/31/1997	X	.....
681	Extension of Notice H 91–20 (HUD), Fraud, Waste and Mismanagement Vulnerability Secretary-Held Mortgages—Section 235.	4/30/1997	X	.....
682	Extension of Notice H 95–34 (HUD), Revision to the Single Family Property Disposition Homeless Program.	4/30/1997	X	.....
683	Extension of Notice H 95–32, Amendment to Notice H 94–15 for Temporary Relocation Housing Requirements and Additional Guidance for Flexible Subsidy for Eligible Multifamily Preservation Properties—HUD Earthquake Loan Program.	4/30/1997	X	.....
684	Secretary-Held Mortgages—Assessment of Late Charges	4/30/1997	X	.....
685	Telecommunications Services—Contracts between Telecommunications Service Providers and Project Owners.	4/30/1997	X	.....
686	Extension of Notice H 91–6 (HUD), Monitoring of Monthly Mortgage Insurance Premium (MIP) Remittance (Limited Scope) and Notice H 91–65 (HUD), Additional Information-Monthly Mortgage Insurance Premium (MIP) Remittances.	4/30/1997	X	.....
687	Extension of Notice H 95–15 (HUD), Single Family Property Disposition Program—Changes to procedures for Treatment of Defective Paint.	5/30/1997	X	.....
688	Extension of Notice H 95–24, Monitoring Responsibilities of Government Technical Representatives/Government Technical Monitors Under the Congregate Housing Services Program.	5/30/1997	X	.....
689	Extension of Notice H 95–22, Implementation of Section 6 of the HUD Demonstration Act of 1993: Section 8 Community Investment Demonstration Program.	5/30/1997	X	.....
690	Extension of Notice H 95–20, Extension and Clarification of Notice H 92–31, Revised Processing Instructions for the Section 223(f) Full Insurance Program.	5/31/1997	X	.....

APPENDIX F—HOUSING/FHA NOTICES AND OTHER GUIDANCE—Continued

	Name of document	Date	Arch	Remove
691	Extension of Notice H 95–14, Production Branch Instructions to Process Section 241 Loan Applications Pursuant to Title VI of the Low Income Housing Preservation and Resident Homeownership Act of 1990 Plan of Action Stage.	5/31/1997	X	.....
692	Reinstatement and Extension of Notice H 91–12 (HUD): Solicitation and Requirements for Single Family Real Estate Asset Management (RAM) Services and Notice H 92–8 (HUD), Clarification of Solicitation Document for Real Estate Asset Management (REAM) Contracts.	2/28/1997	X	.....
693	Repayment under the Nehemiah Housing Opportunity Grants Program (NHOP) (For Field Office Use Only).	2/28/1997	X	.....
694	Reinstatement and Extension of Notice H 94–88, Submission of Environmental Site Assessment Transaction Screen Process and Phase I Environmental Site Assessment Process.	2/28/1997	X	.....
695	Occupancy In Section 202/8 Projects	12/31/1998	X	.....
696	Officer Next Door Sales Program Single Family Property Disposition—Replaced by FR–4712–F–03 regarding Good Neighbor Next Door Sales Program, Final Rule.	12/31/199	X	.....
697	Extension of Notice H 96–107, Temporary Suspension of New Leases under the Single Family Property Disposition Homeless Program, Lease with Option to Purchase.	12/31/1998	X	.....
698	Extension of Notice H 96–101 (HUD), Use of Single Family Acquired Properties by Law Enforcement Agencies for Operation Safe Home.	12/31/1998	X	.....
699	Extension of Notice H 96–93 (HUD), Single Family Property Disposition Program—New Initiatives Relating to Lead-Based Paint Hazards.	12/31/1998	X	.....
700	FY 1998 HUD Appropriations Act	11/30/1998	X	.....
701	Reinstatement and Extension of Notice H 96–88, Procedures for Implementing Section 214 of the Housing and Community Development Act of 1980, as amended—Restrictions on assistance to Noncitizens.	11/30/1998	X	.....
702	Extension of HUD Notice H 96–100, Correction to Notice H 96–91 (Extension of HUD Notice H 95–99, Fiscal year 1996 Special Marketing Tools).	11/30/1998	X	.....
703	Extension of Notice H 96–75 (HUD), Lease of HUD-Owned Single Family Properties to State and Local Governments for Use In Law Enforcement.	10/31/1998	X	.....
704	Operating Cost Adjustment Factors (OCAF)	10/31/1998	X	.....
705	Reinstatement and Extension of Notice H 96–69, Delegated Processing Procedures	10/31/1998	X	.....
706	Reinstatement and Extension of Notice H 96–67, Final Closing Section 202 Loans	9/30/1998	X	.....
707	This Notice provides guidance for implementing provisions of the Emergency Supplemental Appropriations Act for FY 1997 (Pub. L. 105–18), approved June 12, 1997.	9/30/1998	X	.....
708	Multifamily Military Housing/Section 238(c)—Mortgage Insurance in Military Impacted Areas.	9/30/1998	X	.....
709	Single Family Property Disposition (Officer Next Door Sales Program)—Replaced by FR–4712–F–03 regarding Good Neighbor Next Door Sales Program, Final Rule.	11/1/2006	X	.....
710	Contract Non-Renewal Notice	8/31/1998	X	.....
711	Backing-Out Trustee Sweep Savings Before Calculating AAFs for Projects which Originally Received a Financial Adjustment Factor (FAF) and whose Bonds were Refunded.	8/31/1998	X	.....
712	Reinstatement and Extension of Notice 96–55 (HUD), Revision to the SFPD Homeless Initiative Program.	8/31/1998	X	.....
713	Extension of Notice H 96–71 (HUD), Public Housing Homeownership Initiative	7/31/1998	X	.....
714	Reinstatement and Extension of Notice 96–26 (HUD), Revisions to the Single Family Property Disposition Homeless Program.	7/31/1998	X	.....
715	Reinstatement and Extension of Notice B 96–49—Group Homes Funded under Section 202 and Section 811.	7/31/1998	X	.....
716	Reinstatement and Extension of Notice H 96–47—Procedures for Implementing Section 214 of the Housing and Community Development Act of 1980, As Amended Restrictions on Assistance to Noncitizens.	7/31/1998	X	.....
717	Recertification for Residents who Lose Income due to the "Contract with America Advancement Act of 1996, 11 Public Law 104–121, (Advancement Act), and the "Personal Responsibility and Work Opportunity Reconciliation Act of 199611 (Pub. L. 104–193) (Welfare Reform Act).	7/31/1998	X	.....
718	Extension of Notice H 96–50—Field office Review of Market Need for Multifamily Insurance and Coinsurance.	6/30/1998	X	.....
719	**Urgent Notice on Contract Renewals**	6/30/1998	X	.....
720	Reinstatement and Extension of Notice H 96–37, Cost Certification Review	5/31/1998	X	.....
721	Extension of Notice H 96–40, Instructions for Use of the Line of Credit Control System/Voice Response System (LOCCS/VRS) for the Congregate Housing Services Program (CHSP).	5/31/1998	X	.....
722	Lead-Based Paint: Notification Of Purchasers And Tenants In HUD-Insured, HUD-Held And HUD-Subsidized Housing.	5/31/1998	X	.....
723	Fiscal Year 1997 Policy for Capital Advance Authority Assignments, Instructions and Additional Program Requirements for the Section 811 Capital Advance Program Section 811 Application Processing and Selection Instructions, Processing Schedule.	5/23/1998	X	.....
724	1997 Annual Operating Cost Standards Section 202 Supportive Housing for the Elderly and Section 811 Supportive Housing for Persons with Disabilities.	4/24/1998	X	.....
725	Revised User Fees for the Technical Suitability of Products Program	4/24/1998	X	.....
726	Extension of Notice H 95–34 (HUD), Revision to the Single Family Property Disposition Homeless Program.	4/301997	X	.....

APPENDIX F—HOUSING/FHA NOTICES AND OTHER GUIDANCE—Continued

	Name of document	Date	Arch	Remove
727	Deposit of FHA Funds	3/28/1998	X	.....
728	Extension of Notice H 96–17 (HUD), Single Family Property Disposition Program—Changes to Procedures for Treatment of Defective Paint.	3/28/1998	X	.....
729	Extension of Notice H 96–14, Implementation of Section 6 of the HUD Demonstration Act of 1993: Section 8 Community Investment Demonstration Program.	3/28/1998	X	.....
730	Extension of Notice H 96–12, Extension and Clarification of Notice H 92–31, Revised Processing Instructions for the Section 223(f) Full Insurance Program.	3/28/1998	X	.....
731	Extension of Notice H 96–10, Production Branch Instructions to Process Section 241 Loan Applications Pursuant to Title VI of the Low Income Housing Preservation and Resident Homeownership Act of 1990 Plan of Action Stage.	3/31/1997	X	.....
732	Fiscal Year 1997 Annual Adjustment Factor (AAF) Requirements	3/31/1997	X	.....
733	Fiscal Year 1997 Policy for Capital Advance Authority Assignments, Instructions and Additional Program Requirements for the Section 202 Capital Advance Program, Section 202 Application Processing and Selection Instructions, Processing Schedule.	3/31/1997	X	.....
734	FHA's Mixed-Income Housing Underwriting Guidelines	3/31/1997	X	.....
735	Supplemental Guidance for Section 236 Projects with Expiring Section 8 Contracts in Fiscal Year 1997.	3/31/1997	X	.....
736	Reinstatement and Extension of Notice H 96–08 (HUD), Solicitation and Requirements for Single Family Real Estate Asset Management (REAM) Services and Notice H 92–8 (HUD), Clarification of Solicitation Document for Real Estate Asset Management (REAM) Contracts.	3/31/1997	X	.....
737	Revised User Fees for the Technical Suitability of Products Program	2/12/1998	X	.....
738	Extension of Notice H 96–02, Submission of Environmental Site Assessment Transaction Screen Process and Phase I Environmental Site Assessment Process.	2/28/1998	X	.....
739	Supplement to Notice H 96–45, Revised Procedures for Review and Approval of Waivers of Directives.	2/28/1998	X	.....
740	Guidance On Use And Administration Of Savings	2/28/1998	X	.....
741	Small Projects Mortgage Insurance Processing Guidelines	2/5/1998	X	.....
742	Fiscal Year 1997 Annual Adjustment Requirements	2/5/1998	X	.....
743	Comprehensive Needs Assessments (CNAS)	11/10/2017	X	.....
744	Issues Related to Licensure, Underwriting and Development Processing of Nursing Homes, Board and Care Homes and Assisted Living Facilities Insured under Section 232.	2/5/1998	X	.....
745	Project-based Section 8 Contracts Expiring in Fiscal Year 1999	9/3/1999	X	.....
746	Section 8 Contracts Expiring Early in Fiscal Year 1999	9/3/1999	X	.....
747	1998 Annual Operating Cost Standards Section 202 Supportive Housing for the Elderly and Section 811 Supportive Housing for Persons with Disabilities Programs.	9/3/1999	X	.....
748	Fiscal Year 1998 Policy for Capital Advance Authority Assignments, Instructions and Additional Program Requirements for the Section 202 and Section 811 Capital Advance Programs, Application Processing and Selection Instructions, and Processing Schedule. • Attachment 1. • Attachment 2. • Attachment 3. • Attachment 4.	9/3/1999	X	.....
749	Extension of Notice H 97–28, Amendment to Notice H 94–15 for Temporary Relocation Housing Requirements and Additional Guidance for Flexible Subsidy for Eligible Multifamily Preservation Properties—HUD Earthquake Loan Program.	4/30/1999	X	.....
750	New Multifamily Project Audit Requirements Office Of Management And Budget (OMB) Circular A–133 Single Audit Act Amendments Of 1996 (Pub. L. 104–156, July 5, 1996; 31 U.S.C. 7501 *et seq.*).	4/30/1999	X	.....
751	Extension of Notice H 97–17, Extension and Clarification of Notice H 96–12 and B 92–31, Revised Processing Instructions for the Section 223(f) Full Insurance Program.	4/30/1999	X	.....
752	Extension of Notice H 97–12, FHA's Mixed Income Housing Underwriting Guidelines	4/30/1999	X	.....
753	Extension of Notice H 97–15, Production Branch Instructions to Process Section 241 Loan Applications Pursuant to Title VI of the Low Income Housing Preservation and Resident Homeownership Act of 1950 Plan of Action Stage.	4/30/1999	X	.....
754	Extension of Notice H 97–22 (HUD), Single Family Property Disposition Program—Changes to Procedures for Treatment of Defective Paint.	5/31/1999	X	.....
755	Reinstatement and Extension of Notice H 97–11, Supplemental Guidance for Section 236 Projects with Expiring Section 8 Contracts in Fiscal Year 1997.	5/31/1999	X	.....
756	Extension and Reinstatement of Notice H–97–04; Small Projects Mortgage Insurance Guidelines.	5/31/1999	X	.....
757	Use of Section 202 Projects to Support Assisted Living Activities for Frail Elderly and People with Disabilities.	2/28/1999	X	.....
758	Reinstatement and Extension of HUD Notice H 97–02, Comprehensive Needs Assessments (CNAS).	2/28/1999	X	.....
759	Calculating And Retaining Section 236 Excess Income	2/28/1999	X	.....
760	Reinstatement and Extension of Notice H 96–66, Expedited Section 223(a)(7) Processing Instructions for Coinsured Projects.	2/28/1999	X	.....

APPENDIX F—HOUSING/FHA NOTICES AND OTHER GUIDANCE—Continued

	Name of document	Date	Arch	Remove
761	Extension of HUD Notice H 97–01, Issues Related to Licensure, Underwriting and Development Processing of Nursing Homes, Board and Care Homes and Assisted Living Facilities Insured under Section 232.	2/28/1999	X	.....
762	Reinstatement and Extension of Notice H 96–102, Redesigned Section 202 Supportive Housing for the Elderly and Section 811 Supportive Housing for Persons with Disabilities Programs—Firm Commitment Processing to Final Closing.	1/31/1999	X	.....
763	Reinstatement and Extension of Notice H 96–105, Delegated Processing Procedures	1/31/1999	X	.....
764	Reinstatement and Extension of Notice H 96–106, Expedited Section 223(a)(7) Processing Instructions.	1/31/1999	X	.....
765	Annual Adjustment Factors (AAF)	1/31/1999	X	.....
766	Fiscal Year 1998 Interest Rate for Section 202 and Section 811, Capital Advance Projects.	1/31/1999	X	.....
767	Project-based Section 8 Contracts Expiring in Fiscal Year 2000 ..... • Attachments 1–25B.	1/31/1999	X	.....
768	Reinstatement and Extension of HUD Notices H 97–02 and H 98–11, Comprehensive Needs Assessments.	1/31/1999	X	.....
769	Reinstatement and Extension of Notice H 95–55, Procedures for Implementing Section 214 of the Housing and Community Development Act of 1980, as amended—Restrictions on Assistance to Noncitizens.	11/30/2002	X	.....
770	Revised Processing Instructions for the Section 223(f) Program ..... • Appendix 1. • Appendix 2. • Appendix 3. • Format 1. • Format 2. • Format 3.	11/30/2002	X	.....
771	Revisions to Notice H 99–15, Emergency Initiative to Preserve Below-Market Project-Based Section 8 Multifamily Housing Stock, and Clarification of Certain Section 8 Policies in Notices H 98–34 and H 99–08.	11/30/2002	X	.....
772	Extension of the Teacher Next Door (TND) Initiative—Replaced by FR–4712–F–03 regarding Good Neighbor Next Door Sales Program, Final Rule.	11/1/2006	X	.....
773	Funding Procedures Applicable To FHA-Field Office Procurements ..... • Attachment I. • Attachment II. • Attachment III. • Attachment IV.	10/22/1999	X	.....
774	This Notice applies to all Section 236 projects whose mortgages are insured or held by HUD, noninsured State Agency projects whose mortgages are assisted under the Section 236 program and former non-insured State Agency Section 236 assisted projects whose mortgages were refinanced under the Section 223(f) program.	10/22/1999	X	.....
775	Issues Related to Market Study, Management Experience, and Underwriting ..... • Attachment.	10/22/1999	X	.....
776	Extension of Notices H 98–34 and H 99–08, Project-based Section 8 Contracts Expiring in Fiscal Year 1999.	10/22/1999	X	.....
777	Clarification of Eligible Medical Expenses	6/19/1999	X	.....
778	Guidance on definition of ''public charge'' in immigration laws	6/19/1999	X	.....
779	Reinstatement and Extension of Notice H 97–01 and H 98–08, Issues Related to Licensure, Underwriting and Development Processing of Nursing Homes, Board and Care Homes and Assisted Living Facilities Insured under Section 232.	6/19/1999	X	.....
780	Emergency Initiative to Preserve Below-Market Project-Based Section 8 Multifamily Housing Stock. • Attachment 1. • Attachment 2. • Attachment 3. • Attachment 4. • Attachment 5.	6/19/1999	X	.....
781	Revised Asset Management Procedures ..... • Attachment.	5/31/2003	X	.....
782	Use of Assisted Housing Projects (other than Section 202, 202/8 and 202/PRAC) to Support Assisted Living Activities (ALAS) for Frail Elderly and People with Disabilities.	5/31/2003	X	.....
783	Reinstatement and Extension of Notice H 96–102, Redesigned Section 202 Supportive Housing for the Elderly and Section 811 Supportive Housing for Persons with Disabilities Programs—Firm Commitment Processing to Final Closing.	5/31/2003	X	.....
784	Reinstatement and Extension of Notice H 98–12, Use of Section 202 Projects to Support Assisted Living Activities for Frail Elderly and People with Disabilities.	5/31/2002	X	.....
785	Small Projects Mortgage Insurance Processing Guidelines	11/30/2000	X	.....
786	Revision to Notice H 98–34 (HUD) on Project-based Section 8 Contracts Expiring in Fiscal Year 1999. • Attachments 1–18.	11/30/2000	X	.....
787	Subordinate Financing by Federal Home Loan Banks for Section 202 and Section 811 Projects. • Attachment.	11/30/2000	X	.....

APPENDIX F—HOUSING/FHA NOTICES AND OTHER GUIDANCE—Continued

	Name of document	Date	Arch	Remove
788	Prepayment of Direct Loans on Section 202 and 202/8 Projects	11/30/2000	X	
789	Fiscal Year 1999 Policy for Capital Advance Authority Assignments, Instructions and Program Requirements for the Section 202 and Section 811 Capital Advance Programs, Application Processing and Selection Instructions, and Processing Schedule.	11/30/2000	X	
790	Ground Leases for Section 232 Projects	5/31/2017	X	
791	Green Retrofit Program for Multifamily Housing (GRP)	9/30/2012	X	
792	The Extension, Amendment And Close-Out Process For Congregate Housing Services Program (CHSP) Grants.	9/30/1995	X	
793	Designation of FY '95 Revitalization Areas	9/30/1995	X	
794	Reinstatement and extension of Notice H 93–21, Housing Development Instructions for Processing Plans of Action Under Title II of the Housing and Community Development Act of 1987 and Associated Section 241(f) Loan Applications.	9/30/1995	X	
795	Policy and Processing Adjustments to the Title II and Title VI Preservation Programs	11/30/1996	X	
796	Extension of Notice H 94–92, Fiscal Year 1995 Interest Rate for Section 202 and Section 811 Capital Advance Projects and Corrections to Notices H 93–87 and H 93–88.	11/30/1996	X	
797	Reinstatement and extension of Notice 95–12: Annual Adjustment Factor (AAF) Rent Increase Requirements.	11/30/1996	X	
798	Extension of Notice H 94–54, Processing Instructions for Implementation of the Low-Income Housing Preservation and Resident Homeownership Act of 1990 by Housing Development Staff.	6/15/1996	X	
799	Processing Shallow Rental Subsidy for Low-Income Housing Preservation and Resident Homeownership Act Properties.	6/15/1996	X	
800	Extension of Notice H 94–25, Amendment to Notice H 94–15 for Temporary Relocation Housing Requirements and Additional Guidance for Flexible Subsidy for Eligible Multifamily Preservation (LIHPRHA and ELIHPA) Properties—HUD Earthquake Loan Program (HELP).	6/15/1996	X	
801	Extension of Notice H 94–22, Policy and Processing Adjustments to the Title II and Title VI Preservation Programs.	4/30/1996	X	
802	Extension of Notice H 95–87, Section 8 Rents that Exceed 120 percent of the Fair Market Rents in Low Income Housing Preservation and Resident Homeownership Act (LIHPRHA) Projects.	4/30/1996	X	
803	Extension of Notice H 95–67, Operating Cost Adjustment Factors (OCAF)	4/30/1996	X	
804	Extension of Notice H 95–65, Processing Instructions for Implementation of the Low-Income Housing Preservation and Resident Homeownership Act of 1990 by Housing Development Staff.	4/30/1996	X	
805	Extension of Notice H 95–56—Mid-Course Correction II—For Low-Income Housing Preservation and Resident Homeownership and Emergency Low Income Housing Preservation Act Programs.	6/30/1997	X	
806	Reinstatement and extension of Notice 95–92: Reinstatement and Extension of Notice 95–12: Annual Adjustment Factor (AAF) Rent Increase Requirements.	6/30/1997	X	
807	Reinstatement and Extension of Notice H 96–59, Processing Instructions for Implementation of the Low-Income Housing Preservation and Resident Homeownership Act of 1990 by Housing Development Staff.	5/31/1998	X	
808	Extension of Notice H 96–48—Mid-Course Correction II—For Low-Income Housing Preservation and Resident Homeownership and Emergency Low-Income Housing Preservation Act Programs.	5/31/1998	X	
809	Reinstatement and Extension of Notice H 96–38, Development Instructions for Processing Plans of Action Under Title II of the Housing and Community Development Act of 1987 and Associated Section 241(f) Loan Applications.	5/31/1998	X	
810	Extension of Notice H 96–25, Special Rent Adjustment for Non-Drug Related Crime Prevention/Security Measures under the "or Similar Costs" Statutory Language for Section 8 Rents Based on the Annual Adjustment Factor (AAF).	4/30/1999	X	
811	Extension of Notice H 97–25, Special Rent Adjustment for Non-Drug Related Crime Prevention/Security Measures under the "or Similar Costs" Statutory Language for Section 8 Rents Based on the Annual Adjustment Factor (AAF).	4/30/1999	X	
812	Reinstatement and Extension of Notice H 98–27, Special Rent Adjustment for Non-Drug Related Crime Prevention/Security Measures under the "or Similar Costs" Drug Related Crime Prevention/Security Measures under the "or Similar Costs" Statutory Language for Section 8 Rents Based on the Annual Adjustment Factor (AAF).	4/30/1999	X	
813	1999 Annual Operating Cost Standards Section 202 Supportive Housing for the Elderly and Section 811 Supportive Housing for Persons with Disabilities Programs.	4/30/1999	X	
814	Extension of Notice H 91–97, Site Changes in the Section 202 Program	No Date	X	

APPENDIX G—MANUFACTURED HOUSING

	Name of document	Date	Arch	Remove
1	SEBA Report on Frost Free Foundations	10/7/2016	X	
2	RV Exemption under Manufactured Housing Act	10/1/2014	X	
3	Interpretative Bulletin A–1–88 (Measurement for the RV exemption)	10/5/1988	X	
4	Inclusion of Lofts in our RV Exemption	8/1/1997	X	

APPENDIX G—MANUFACTURED HOUSING—Continued

	Name of document	Date	Arch	Remove
5	Correction of Reference Standard for Anti-Scald Valves-Final Rule	6/3/2014	X	
6	Nortek Global HVAC Furnace Service Bulletin TB15–120A/OEM Memo	12/9/2015	X	

APPENDIX H—LEAD HAZARD CONTROL AND HEALTHY HOMES

	Name of document	Date	Arch	Remove
1	Rehabbing Flooded Houses	1/120141/	X	
2	Reconstruction y Rehabilitacion de Viviendas	1/1/2018	X	
3	CO Detectors Press Release	1/1/2019	X	
4	Archived Resources	1/1/2017	X	
5	Community Health Worker	4/30/2018	X	
6	Policy Review	4/30/2018	X	
7	HIPAA Requirements	4/30/2018	X	
8	The Entire Rule (as amended 1/13/2017)	1/13/2017	X	
9	Press Release on Lead Safe Housing Rule	8/31/2016	X	
10	Proposal to amend Lead Safe Housing Rule	9/1/2016	X	
11	LSHR Overview document	12/6/1999	X	
12	RIA Original 1999 Rule	9/7/1999	X	
13	Rule Fact Sheet	9/15/1999	X	
14	Summary of the Rule's requirements and effective dates for various types of multifamily housing programs and relevant funding and training assistance.	9/15/2000	X	
15	Subpart A—Disclosure of Known Lead-Based Paint Hazards Upon Sale or Lease of Residential Property.	9/15/1999	X	
16	Regulatory Overview (MS PowerPoint)	12/6/1999	X	
17	Proposal to amend Lead Safe Housing Rule Video of Convening (3:03)	10/6/2016	X	
18	Purpose and Use of Healthy Homes Supplemental Funding (HHSupp)	8/31/2016	X	
19	Purpose and Use of Healthy Homes Supplemental Funding	8/31/2016		X
20	LOCCS Policy Guidance Including Administrative Cost (Superseded by PGI 2015–02)	4/1/2013		X
21	Units Counted as Match	10/19/2012		X
22	Administrative Costs (Superseded by PGI 2015–01)	10/15/2012		X
23	Use Of Contractors Trained In Lead-Safe Work Practices To Conduct Interim Controls	5/14/2002		X
24	Closeout Procedures for Lead-Based Paint Hazard Control Grants	3/30/2000		X
25	Modification To 12-Month Follow-Up Dust-Wipe Testing Requirement	1/8/1998		X
26	Relocation Occupant Protection Plan	4/30/2018		X
27	Lead Safe Housing Rule Elevated Blood Lead Level amendment	1/13/2017		X
28	HUDNo_17–017—HUD Offers Grants to Clean Up Lead-Based Paint Hazards	2/8/2017		X
29	Find HUD-approved Lead Safe Work Practices Training Curricula	10/20/2010		X
30	Renovate Right: Important Lead Hazard Information for Families, Child Care Providers, and Schools (PDF).	1/1/2010		X
31	Lead Safety During Renovation (PDF) color, in English	3/1/2008		X
32	EPA Small Entity Compliance Guide to Renovate Right (PDF)	12/1/2008		X
33	EPA Small Entity Compliance Guide to Renovate Right En Espanol (PDF)	12/1/2008		X
34	U.S.EPA/HUD Lead Safety for Renovation, Repair and Painting (RRP) Train-the-Trainer Program Presentation.	1/1/2010		X
35	HUD–EPA Lead Safe Housing Rule Fact Sheet	12/1/1996		X

APPENDIX I—FAIR HOUSING AND EQUAL OPPORTUNITY

	Name of document	Date	Arch	Remove
1	Questions and Answers on Hurricanes Katrina and Rita Evacuees in Housing for Older Persons.	11/14/2005	X	
2	Questions and Answers on Sexual Harassment Under the Fair Housing Act	11/17/2008	X	
3	Service Animals and Assistance Animals for People with Disabilities in Housing and HUD-funded Programs.	4/25/2013	X	
4	Elements of Proof	8/13/2014	X	
5	Compliance-based Evaluations of a Recipients Certifications that it has Affirmatively Furthered Fair Housing.	3/5/2013	X	
6	Technical Guidance Memorandum #4: Exemption from Familial Status Prohibition for State Elderly Housing Programs: REV—1: Program Determinations.	2/14/1991	X	
7	Civil Rights Limited On-Site Monitoring and Section 504 Reviews of Multifamily Housing Projects for Contract Administrators.	No Date	X	
8	Letter from Secretary Shaun Donovan to OSHC Grantees	1/20/2012	X	
9	Top Seven (7) Keys to Affirmatively Further Fair Housing	No Date	X	
10	Fact Sheet: HUD's Fair Housing and Civil Rights Mission	No Date	X	
11	FHEO Conclusions Concerning Affirmatively Furthering Fair Housing (AFFH) and CDBG	3/3/2011	X	
12	AFFH Regional Training, Sample Agenda	No Date	X	
13	AFFH Timeline Infographic for Consolidated Plan Program Participants	No Date	X	
14	Guidance on HUD's Review of Assessments of Fair Housing (AFH)	6/1/2016	X	

APPENDIX I—FAIR HOUSING AND EQUAL OPPORTUNITY—Continued

	Name of document	Date	Arch	Remove
15	Memo to all CPD re: Incorporating 24 CFR part 5 Affirmatively Furthering Fair Housing into 24 CFR 91.10 Consolidated Program Year, 24 CFR 91.105 Citizen Participation Plan for Local Governments and 24 CFR 91.115 Citizen Participation Plan for States.	3/14/2016	X	.....
16	AFFH Training Modules Developed by Abt	5/4/2015	X	.....
17	Assessment of Fair Housing (AFH) Reviewer Field Guide	9/9/2017	X	.....
18	Fair Housing Act Application to Internet Advertising	9/20/2006	X	.....
19	Limitations on Accepting as Dual-Filings FHAP Cases That Implicate First Amendment ..	3/7/2001	X	.....
20	Insurance Policy Restrictions as a Defense for Refusals to Make a Reasonable Accommodation.	6/12/2006	X	.....

[FR Doc. 2020–23986 Filed 10–29–20; 8:45 am]

BILLING CODE 4210–67–P

FEDERAL REGISTER

Vol. 85 Tuesday,

No. 213 November 3, 2020

Part VI

Department of Justice

Antitrust Division

United States, et al. v. Waste Management, Inc., et al. Proposed Final Judgment and Competitive Impact Statement; Notice

DEPARTMENT OF JUSTICE

Antitrust Division

United States, et al. v. Waste Management, Inc., et al. Proposed Final Judgment and Competitive Impact Statement

Notice is hereby given pursuant to the Antitrust Procedures and Penalties Act, 15 U.S.C. 16(b)–(h), that a proposed Final Judgment, Stipulation, and Competitive Impact Statement have been filed with the United States District Court for the District of Columbia in *United States of America, et al.* v. *Waste Management, Inc., et al.,* Civil Action No. 1:20–cv–3063. On October 23, 2020, the United States filed a Complaint alleging that Waste Management, Inc.'s proposed acquisition of Advanced Disposal Services, Inc. would violate Section 7 of the Clayton Act, 15 U.S.C. 18. The proposed Final Judgment, filed at the same time as the Complaint, requires Waste Management and Advanced Disposal Services to divest certain tangible and intangible assets in 57 local markets located in 10 states.

Copies of the Complaint, proposed Final Judgment, and Competitive Impact Statement are available for inspection on the Antitrust Division's website at *http://www.justice.gov/atr* and at the Office of the Clerk of the United States District Court for the District of Columbia. Copies of these materials may be obtained from the Antitrust Division upon request and payment of the copying fee set by Department of Justice regulations.

Public comment is invited within 60 days of the date of this notice. Such comments, including the name of the submitter, and responses thereto will be posted on the Antitrust Division's website, filed with the Court, and, under certain circumstances, published in the **Federal Register**. Comments should be directed to Katrina Rouse, Chief, Defense, Industrials, and Aerospace Section, Antitrust Division, Department of Justice, 450 Fifth Street NW, Suite 8700, Washington, DC 20530 (telephone: 202–598–2459).

Suzanne Morris,

Chief, Premerger and Division Statistics, Antitrust Division.

United States District Court for the District of Columbia

United States of America, U.S. Department of Justice, Antitrust Division, 450 Fifth Street NW, Suite 8700, Washington, DC 20530, State of Florida, Office of Attorney General, PL–01, The Capitol, Tallahassee, FL 32399, State of Illinois, Illinois Attorney General, 100 West Randolph Street, Chicago, IL 60601, State of Minnesota, Minnesota Attorney General, 445 Minnesota Street, Suite 1400, St. Paul, MN 55101, Commonwealth of Pennsylvania, Office of Attorney General, 14th Floor, Strawberry Square, Harrisburg, PA 17120, and *State of Wisconsin, Wisconsin Department of Justice, P.O. Box 7857, Madison, WI 53707,* Plaintiffs, v. *Waste Management, Inc., 1001 Fannin Street, Houston, TX 77002,* and *Advanced Disposal Services, Inc., 90 Fort Wade Road, Ponte Vedra, FL 32081,* Defendants.

Civil Action No.: 1:20–cv–3063
Judge: Hon. John D. Bates

Complaint

The United States of America (''United States''), acting under the direction of the Attorney General of the United States, and the States of Florida, Illinois, Wisconsin, and Minnesota as well as the Commonwealth of Pennsylvania (''Plaintiff States''), bring this civil antitrust action against Defendants Waste Management, Inc. (''WMI'') and Advanced Disposal Services, Inc. (''ADS'') to enjoin WMI's proposed acquisition of ADS. The United States and Plaintiff States complain and allege as follows:

I. Nature of the Action

1. WMI's proposed $4.6 billion acquisition of its competitor, ADS, would combine the largest and fourth-largest solid waste management companies in the United States. The proposed transaction presents the most significant consolidation in the waste industry in over a decade and would eliminate critical competition in over 50 local markets in ten states in the eastern half of the United States.

2. WMI and ADS compete aggressively against each other to provide waste collection and waste disposal services in these local markets. In each of these local markets, WMI and ADS are either the only two or two of only a few significant providers of small container commercial waste (''SCCW'') collection and municipal solid waste (''MSW'') disposal, which are essential for businesses, municipalities, and towns throughout the country.

3. If the transaction proceeds to close in its current form, consumers would likely pay higher prices and receive lower quality service. Competition between WMI and ADS has resulted in lower prices and improved service to numerous customers, including towns and cities, restaurants, offices, apartment buildings, and other businesses. Collection customers rely on WMI and ADS to collect their waste reliably and on a regular basis. In the absence of competition between WMI and ADS, these customers would likely pay more for waste collection and receive lower quality service. Disposal customers, such as independent and municipally-owned waste haulers, rely on WMI and ADS for affordable and accessible waste disposal options, including landfills and transfer stations, to dispose of the waste they collect from towns, cities, and other municipalities. If the transaction is consummated as proposed by Defendants, these disposal customers would likely face higher fees and less favorable access to WMI's and ADS's disposal facilities.

4. The proposed transaction will likely substantially lessen competition for SCCW collection and MSW disposal in over 50 local markets in the United States in violation of Section 7 of the Clayton Act, 15 U.S.C. 18, and therefore should be enjoined.

II. The Parties and the Transaction

5. WMI is a Delaware corporation headquartered in Houston, Texas. WMI is the largest solid waste hauling and disposal company in the United States and provides waste collection, recycling, and disposal (including transfer) services. WMI operates in 49 states and the District of Columbia. For 2019, WMI reported revenues of approximately $15.5 billion.

6. ADS is a Delaware corporation headquartered in Ponte Vedra, Florida. It is the fourth-largest solid waste hauling and disposal company in the United States and provides waste collection, recycling, and disposal (including transfer) services. ADS operates in 16 states, primarily in the Midwest, Mid-Atlantic, and Southeast regions of the United States. For 2019, ADS reported revenues of approximately $1.6 billion.

7. On April 14, 2019, WMI agreed to acquire all of the outstanding common stock of ADS for approximately $4.9 billion. On June 24, 2020, WMI and ADS agreed to a revised purchase price of approximately $4.6 billion.

III. Jurisdiction and Venue

8. The United States brings this action under Section 15 of the Clayton Act, 15 U.S.C. 25, as amended, to prevent and restrain Defendants from violating Section 7 of the Clayton Act, 15 U.S.C. 18.

9. The Plaintiff States bring this action under Section 16 of the Clayton Act, 15 U.S.C. 26, to prevent and restrain Defendants from violating Section 7 of the Clayton Act, 15 U.S.C. 18. The Plaintiff States, by and through their respective Attorneys General, bring this action as parens patriae on behalf of and to protect the health and welfare of their

citizens and the general economy in each of their states.

10. Defendants' activities substantially affect interstate commerce. They provide SCCW collection and MSW disposal throughout the eastern half of the United States. This Court has subject matter jurisdiction over this action pursuant to Section 15 of the Clayton Act, 15 U.S.C. 25, and 28 U.S.C. 1331, 1337(a), and 1345.

11. Defendants have consented to venue and personal jurisdiction in this judicial district. Venue is proper in this district under Section 12 of the Clayton Act, 15 U.S.C. 22, and under 28 U.S.C. 1391(b) and (c).

IV. Relevant Markets

A. Product Markets

1. Small Container Commercial Waste Collection

12. SCCW (small container commercial waste) collection is a relevant product market. Waste collection firms—also called haulers—collect MSW (municipal solid waste) from residential, commercial, and industrial establishments, and transport that waste to a disposal site, such as a transfer station, landfill or incinerator, for processing and disposal.

13. SCCW collection is the business of collecting MSW from commercial and industrial accounts, usually in small containers (*i.e.,* dumpsters with one to ten cubic yards capacity), and transporting or hauling such waste to a disposal site. Typical SCCW collection customers include office and apartment buildings and retail establishments (*e.g.,* stores and restaurants).

14. SCCW collection is distinct from the collection of other types of waste such as residential and roll-off waste, each of which is subject to its own regulatory scheme dictating the manner in which it must be collected. An individual commercial customer typically generates substantially more MSW than a residential customer. To handle this high volume of MSW efficiently, haulers often provide commercial customers with small containers for storing the waste. Haulers organize their commercial accounts into routes, and collect and transport the MSW generated by these accounts in front-end load (''FEL'') trucks uniquely well suited for commercial waste collection.

15. On a typical SCCW collection route, an operator drives an FEL truck to the customer's container, engages a mechanism that grasps and lifts the container over the front of the truck, and empties the container into the vehicle's storage section where the waste is compacted and stored. The operator continues along the route, collecting MSW from each of the commercial accounts, until the vehicle is full. The operator then drives the FEL truck to a disposal facility, such as a transfer station, landfill, or incinerator, and empties the contents of the vehicle. Depending on the number of locations and amount of waste collected on the route, the operator may make one or more trips to the disposal facility in servicing the route.

16. In contrast to an SCCW collection route, a residential waste collection route is highly labor intensive. A residential customer's MSW is typically stored in much smaller containers, (*e.g.,* garbage bags or trash cans) and instead of using an FEL truck manned by a single operator, residential waste collection haulers routinely use rear-end load or side-load trucks manned by two- or three-person teams. On residential routes, crews often hand-load the customer's MSW by tossing garbage bags and emptying trash cans into the vehicle's storage section. In light of these differences, haulers typically organize commercial customers into separate routes from residential customer routes.

17. Roll-off collection also is not a substitute for SCCW collection. A roll-off container is much larger than an SCCW container, and is serviced by a truck capable of carrying a roll-off container rather than an FEL truck. Unlike SCCW customers, multiple roll-off customers are not served between trips to the disposal site, as each roll-off truck is typically only capable of carrying one roll-off container at a time.

18. Other types of waste collection, such as hazardous or medical waste collection, also are not substitutes for SCCW collection. These forms of collection differ from SCCW collection in the hauling equipment required, the volume of waste collected, and the facilities where the waste is disposed.

19. Thus, absent competition from other SCCW collection firms, SCCW collection providers could profitably increase their prices without losing significant sales to firms engaged in the provision of other types of waste collection services. In other words, in the event of a small but significant price increase for SCCW collection, customers would not substitute to other forms of collection in sufficient numbers so as to render the price increase unprofitable. SCCW collection is therefore a line of commerce, or relevant product market, for purposes of analyzing the effects of the acquisition under Section 7 of the Clayton Act.

2. Municipal Solid Waste Disposal

20. MSW (municipal solid waste) disposal is a relevant product market. MSW is solid putrescible waste generated by households and commercial establishments such as retail stores, offices, restaurants, warehouses, and industrial facilities. MSW has physical characteristics that readily distinguish it from other liquid or solid waste (*e.g.,* waste from manufacturing processes, regulated medical waste, sewage, sludge, hazardous waste, or waste generated by construction or demolition sites).

21. Haulers must dispose of all MSW at a permitted disposal facility. There are three main types of disposal facilities—landfills, incinerators, and transfer stations. Such facilities must be located on approved types of land and operated under prescribed procedures. Federal, state, and local safety, environmental, zoning, and permit laws and regulations dictate critical aspects of storage, handling, transportation, processing, and disposal of MSW. In less densely populated areas, MSW often is disposed of directly into landfills that are permitted and regulated by a state and the federal government. Landfill permit restrictions often impose limitations on the type and amount of waste that can be deposited. In many urban and suburban areas, however, landfills are scarce due to high population density and the limited availability of suitable land. As a result, MSW generated in such areas often is burned in an incinerator or taken to a transfer station. A transfer station is an intermediate disposal site for the processing and temporary storage of MSW before it is transferred, in bulk, to more distant landfills or incinerators for final disposal.

22. Some haulers—including WMI and ADS—are vertically integrated and operate their own disposal facilities. Vertically-integrated haulers often prefer to dispose of waste at their own disposal facilities. Depending on the market, vertically-integrated haulers may sell a portion of their disposal capacity to customers in need of access to a disposal facility. These disposal customers include independent (non-vertically integrated) and municipally-owned haulers. Disposal customers rely on the availability of cost-competitive disposal capacity to serve their own collection customers and to compete for new ones.

23. Due to strict laws and regulations that govern the disposal of MSW, there are no reasonable substitutes for MSW disposal, which must occur at landfills, incinerators, or transfer stations. Thus,

in the event of a small but significant price increase from MSW disposal firms, customers would not substitute to other forms of disposal in sufficient numbers so as to render the price increase unprofitable. MSW disposal is therefore a line of commerce, or relevant product market, for purposes of analyzing the effects of the acquisition under Section 7 of the Clayton Act.

B. Relevant Geographic Markets

1. Small Container Commercial Waste Collection

24. SCCW collection generally is provided in highly localized areas. This is because a hauler needs a large number of commercial accounts that are reasonably close together to operate efficiently and profitably. If there is significant travel time between customers, then the hauler earns less money for the time that the truck operates. Haulers, therefore, try to minimize the ''dead time'' in which the truck is operating and incurring costs from fuel, wear and tear, and labor, but not generating revenue from collecting waste. Likewise, customers must be near the hauler's base of operations as it would be unprofitable for a truck to travel a long distance to the start of a route. Haulers, therefore, generally establish garages and related facilities to serve as bases within each area served.

25. As currently contemplated, the transaction would likely cause harm in 33 relevant geographic markets for SCCW collection located in six states: Alabama, Florida, Georgia, South Carolina, Minnesota, and Wisconsin. Those 33 markets are identified in Appendix A. In each of these markets, a hypothetical monopolist of SCCW collection could profitably impose a small but significant non-transitory increase in price to local customers without losing significant sales to more distant competitors. Accordingly, each of the areas listed in Appendix A constitutes a relevant geographic market and section of the country for purposes of analyzing the effects of the acquisition under Section 7 of the Clayton Act.

2. Municipal Solid Waste Disposal

26. Collection trucks transport MSW to landfills, incinerators, and transfer stations for disposal. The price and availability of disposal sites close to a hauler's routes are major factors that determine a hauler's competitiveness and profitability, as the cost of transporting MSW to a disposal site—including fuel, regular truck maintenance, and hourly labor—is a substantial component of the total cost of disposal. Haulers also prefer nearby disposal sites to minimize the FEL truck dead time. Due to the costs associated with travel time and customers' preference to have disposal sites close by, an MSW disposal provider must have local disposal facilities to be competitive. The relevant markets for MSW disposal markets are therefore local, often consisting of no more than a few counties.

27. As currently contemplated, the transaction would likely cause harm in 24 relevant geographic markets for MSW disposal located in eight states: Alabama, Florida, Georgia, Illinois, Indiana, Michigan, Pennsylvania, and Wisconsin. Those 24 markets are identified in Appendix B. In each of these local markets, a hypothetical monopolist of MSW disposal could profitably impose a small but significant non-transitory increase in price for the disposal of MSW without losing significant sales to more distant disposal sites.

28. Accordingly, each of the areas listed in Appendix B constitutes a relevant geographic market and section of the country for purposes of analyzing the effects of the acquisition under Section 7 of the Clayton Act.

V. Anticompetitive Effects

29. The proposed transaction would substantially lessen competition and harm consumers in each relevant market by eliminating the substantial head-to-head competition that currently exists between WMI and ADS. Businesses, municipalities, independent haulers, and other customers would pay higher prices as a result of the acquisition.

30. WMI's acquisition of ADS would remove a significant competitor for SCCW collection and MSW disposal in markets that are already highly concentrated and difficult to enter. WMI and ADS compete head-to-head for SCCW collection and/or MSW disposal customers in each of the 57 geographic markets identified in Appendices A and B. In these geographic markets, WMI and ADS each account for a substantial share of total revenue generated from SCCW collection and/or MSW disposal and, in each relevant market, are two of no more than four significant (*i.e.,* not fringe) competitors. *See* Appendices A and B (providing a complete list of the number of significant competitors in each relevant market pre-merger). In each SCCW collection market, collection customers including offices, apartment buildings, and retail establishments have been able to secure better collection rates and improved service by threatening to switch to the competing SCCW hauler. Likewise, in each MSW disposal market, independent haulers and municipalities have been able to negotiate more favorable disposal rates by threatening to move waste to the other competitor's disposal facilit(ies). In each of the relevant markets identified in Appendices A and B, the resulting increase in concentration, loss of competition, and the unlikeliness of significant entry or expansion would likely result in higher prices, lower quality and level of service, and reduced choice for SCCW collection and MSW disposal customers.

VI. Entry

A. Difficulty of Entry Into Small Container Commercial Waste Collection

31. Entry of new competitors into SCCW collection in each of the relevant markets identified in Appendix A would be difficult and time-consuming and is unlikely to prevent the harm to competition that is likely to result if the proposed transaction is consummated.

32. A new entrant in SCCW collection could not provide a significant competitive constraint on the prices that market incumbents charge until achieving a minimum efficient scale and operating efficiency comparable to existing competitors. In order to obtain a comparable operating efficiency, a new competitor would have to achieve route densities similar to those of firms already in the market. Incumbents in a geographic market, however, can prevent new entrants from winning a large enough base of customers by selectively lowering prices and entering into longer term contracts with collection customers.

B. Difficulty of Entry Into Municipal Solid Waste Disposal

33. Entry of new competitors into MSW disposal in each of the relevant markets identified in Appendix B would be difficult and time-consuming and is unlikely to prevent the harm to competition that is likely to result if the proposed transaction is consummated.

34. A new entrant in MSW disposal would need to obtain a permit to construct a disposal facility or to expand an existing one, and this process is costly and time-consuming, typically taking many years. Land suitable for MSW disposal is scarce, as a landfill must be constructed away from environmentally-sensitive areas, including fault zones, wetlands, flood plains, and other restricted areas. Even when suitable land is available, local public opposition frequently increases the time and uncertainty of the permitting process.

35. Construction of a new transfer station or incinerator also is difficult and time consuming and faces many of the same challenges as new landfill construction, including local public opposition.

36. Entry by constructing and permitting a new MSW disposal facility would thus be costly and time-consuming and unlikely to prevent market incumbents from significantly raising prices for MSW disposal in each of the disposal markets following the acquisition.

VII. Violations Alleged

37. WMI's proposed acquisition of ADS is likely to substantially lessen competition in each of the relevant markets set forth above in violation of Section 7 of the Clayton Act, 15 U.S.C. 18.

38. The acquisition will likely have the following anticompetitive effects, among others, in the relevant markets:

a. Actual and potential competition between WMI and ADS will be eliminated;

b. competition generally will be substantially lessened; and

c. prices will likely increase and quality and the level of service will likely decrease.

VIII. Request for Relief

39. The United States and the Plaintiff States request that this Court:

a. Adjudge and decree WMI's acquisition of ADS to be unlawful and in violation of Section 7 of the Clayton Act, 15 U.S.C. 18;

b. preliminarily and permanently enjoin Defendants and all persons acting on their behalf from consummating the proposed acquisition by WMI of ADS or from entering into or carrying out any other contract, agreement, plan, or understanding, the effect of which would be to combine WMI with ADS;

c. award the United States and the Plaintiff States the costs for this action; and

d. grant the United States and the Plaintiff States such other relief as the Court deems just and proper.

Dated: October 23, 2020.

Respectfully submitted,

COUNSEL FOR PLAINTIFF UNITED STATES:

Makan Delrahim (D.C. Bar #457795),
Assistant Attorney General, Antitrust Division.

Bernard A. Nigro, Jr. (D.C. Bar #412357),
Principal Deputy Assistant Attorney General, Antitrust Division.

Alexander P. Okuliar (D.C. Bar #481103),
Deputy Assistant Attorney General, Antitrust Division.

Kathleen S. O'Neil,
Senior Director of Investigations and Litigation, Antitrust Division.

Katrina H. Rouse (D.C. Bar #1013035),
Chief, Defense, Industrials, and Aerospace Section, Antitrust Division.

Jay D. Owen,
Assistant Chief, Defense, Industrials, and Aerospace Section, Antitrust Division.

Jeremy W. Cline * (D.C. Bar #1011073),
Stephen Harris,
Gabriella R. Moskowitz (D.C. Bar #1044309),
Kerrie J. Freeborn (D.C. Bar #503143),
Daniel J. Monahan, Jr.,
Veronica N. Onyema (D.C. Bar #979040)
Trial Attorneys, Defense, Industrials, and Aerospace Section, Antitrust Division, 450 Fifth Street NW, Suite 8700, Washington, DC 20530, Telephone: (202) 598–2294, Facsimile: (202) 514–9033, Email: jeremy.cline@usdoj.gov.
* Lead Attorney To Be Noticed.

FOR PLAINTIFF STATE OF FLORIDA:

Ashley Moody,
Attorney General.
Patricia A. Conners,
Chief Associate Deputy Attorney General.

Lizabeth A. Brady,
Chief, Multistate Enforcement, Florida State Bar Number: 457991, Office of the Attorney General, State of Florida, PL–01, The Capitol, Tallahassee, FL 32399–1050, Tel: (850) 414–3300, Fax: (850) 488–9134, Email: liz.brady@myfloridalegal.com.
Colin G. Fraser,
Assistant Attorney General, Florida State Bar Number: 104741, Email: colin.fraser@myfloridalegal.com.

FOR PLAINTIFF STATE OF ILLINOIS:

Kwame Raoul,
Attorney General.

Blake L. Harrop,
Chief, Antitrust Bureau.
Joseph B. Chervin,
Assistant Attorney General, Office of the Attorney General of Illinois, Antitrust Bureau, 100 W Randolph Street, 11th Floor, Chicago, IL 60601, Telephone: (312) 814–3722, Fax: (312) 814–4209, jchervin@atg.state.il.us.

FOR PLAINTIFF STATE OF MINNESOTA:

Keith Ellison,
Attorney General, State of Minnesota.
James W. Canaday,
Deputy Attorney General.

Justin Moor,
Assistant Attorney General, Atty. Reg. No. 0397596, 445 Minnesota Street, Suite 1400, St. Paul, Minnesota 55101–2130, (651) 757–1060, justin.moor@ag.state.mn.us.

FOR PLAINTIFF COMMONWEALTH OF PENNSYLVANIA:

Josh Shapiro,
Attorney General of Pennsylvania.
James A. Donahue, III,
Executive Deputy Attorney General, jdonahue@attorneygeneral.gov.
Tracy W. Wertz,
Chief Deputy Attorney General, twertz@attorneygeneral.gov.

Norman W. Marden (PA Bar #203423),
Senior Deputy Attorney General, nmarden@attorneygeneral.gov.
Pennsylvania Office of Attorney General, Antitrust Section, Strawberry Square, 14th Floor, Harrisburg, PA 17120, Telephone: (717) 787–4530.

FOR PLAINTIFF STATE OF WISCONSIN:

Joshua L. Kaul,
Attorney General, State of Wisconsin, Wisconsin Department of Justice.

Shannon A. Conlin (Pro Hac Forthcoming),
Assistant Attorney General, Post Office Box 7857, Madison, WI 53707–7857, (608) 266–1677, Conlinsa@doj.state.wi.us.

Appendix A: SCCW Geographic Markets and Number of Significant Competitors Pre-Merger

SMALL CONTAINER COMMERCIAL WASTE

Geographic market	Counties/municipalities within geographic market	Number of significant competitors pre-merger
1. Lee County, Alabama	Lee County, AL	3
2. Macon County, Alabama	Macon County, AL	2
3. Mobile, Alabama	City of Mobile, AL	3

SMALL CONTAINER COMMERCIAL WASTE—Continued

Geographic market	Counties/municipalities within geographic market	Number of significant competitors pre-merger
4. Montgomery County, Alabama	Montgomery County, AL	3
5. Tuscaloosa, Alabama	City of Tuscaloosa, AL	3
6. Jacksonville, Florida	Duvall, St. Johns, and Clay Counties, FL	3
7. Ocala, Florida	Marion and Citrus Counties, FL	3
8. Augusta, Georgia	Columbia and Richmond Counties, GA and Edgefield and Aiken Counties, SC.	4
9. Rochester, Minnesota	City of Rochester, MN	3
10. St. Cloud, Minnesota	City of St. Cloud, MN	3
11. Calumet County, Wisconsin	Calumet County, WI	2
12. Clark, Wisconsin	Clark and Taylor Counties, WI	3
13. Dane County, Wisconsin	Dane County, WI	3
14. Fond du Lac and Sheboygan, Wisconsin	Dodge, Fond du Lac, Ozaukee, Sheboygan, and Washington Counties, WI.	2
15. Green Bay, Wisconsin	Brown and Outagamie Counties, WI	4
16. Green County, Wisconsin	Green County, WI	3
17. Green Lake, Wisconsin	Columbia, Green Lake, and Marquette Counties, WI	2
18. Eau Claire, Wisconsin	Chippewa and Eau Claire Counties, WI	4
19. Jackson County, Wisconsin	Jackson County, WI	3
20. Jefferson County, Wisconsin	Jefferson County, WI	3
21. Kenosha County, Wisconsin	Kenosha County, WI	2
22. Kewaunee County, Wisconsin	Kewaunee County, WI	2
23. Langlade, Wisconsin	Langlade, Lincoln, Oneida, and Shawano Counties, WI	2
24. Manitowoc County, Wisconsin	Manitowoc County, WI	3
25. Mar-Oco, Wisconsin	Marinette and Oconto Counties, WI	3
26. Marathon, Wisconsin	Marathon, Portage, and Wood Counties, WI	3
27. Milwaukee, Wisconsin	Milwaukee, Racine, and Waukesha Counties, WI	2
28. Price County, Wisconsin	Price County, WI	3
29. Rock County, Wisconsin	Rock County, WI	3
30. Sauk County, Wisconsin	Sauk County, WI	3
31. Walworth County, Wisconsin	Walworth County, WI	3
32. Waupaca, Wisconsin	Waupaca County, WI	4
33. Waushara, Wisconsin	Waushara and Winnebago Counties, WI	2

Appendix B: MSW Disposal Geographic Markets and Number of Significant Competitors Pre-Merger

MSW DISPOSAL

Geographic market	Counties/municipalities within geographic market	Number of significant competitors pre-merger
1. East Central, Alabama	Lee and Macon Counties, AL	2
2. Mobile, Alabama	City of Mobile, AL	3
3. Phenix City, Alabama	Phenix City, AL	2
4. Ocala, Florida	Marion and Citrus Counties, FL	3
5. Atlanta, Georgia	Cherokee, Forsyth, Gwinnett, Fulton, Clayton, and Cobb Counties, GA.	3
6. Kane County, Illinois	Kane County, IL	3
7. Lake County, Illinois	Lake County, IL	3
8. Northern Cook County, Illinois	Area west of Interstate 94 and north of Interstate 90 in Cook County, Illinois.	4
9. Fort Wayne, Indiana	Allen, Kosciusko, and Whitley Counties, IN	3
10. Detroit, Michigan	Wayne, Macomb and Oakland Counties, MI	4
11. Bedford County, Pennsylvania	Bedford County, PA	2
12. Fayette County, Pennsylvania	Fayette and Greene Counties, PA	4
13. Indiana County, Pennsylvania	Clarion, Jefferson, and Indiana Counties, PA	3
14. Somerset County, Pennsylvania	Cambria and Somerset Counties, PA	2
15. State College, Pennsylvania	Centre and Clearfield Counties, PA	3
16. Dane County, Wisconsin	Dane County, WI	3
17. Eau Claire, Wisconsin	Chippewa and Eau Claire Counties, WI	2
18. Fond du Lac and Sheboygan, Wisconsin	Dodge, Fond du Lac, Ozaukee, Sheboygan, and Washington Counties, WI.	2
19. Greater Green Bay, Appleton, Oshkosh, Wisconsin	Brown, Outagamie, and Winnebago Counties, WI	2
20. Greater Manitowoc, Wisconsin	Calumet, Kewaunee, and Manitowoc Counties, WI	2

MSW DISPOSAL—Continued

Geographic market	Counties/municipalities within geographic market	Number of significant competitors pre-merger
21. Green County, Wisconsin	Green County, WI	3
22. Janesville, Wisconsin	Jefferson, Rock, and Walworth Counties, WI	3
23. Milwaukee, Wisconsin	Milwaukee, Racine, and Waukesha Counties, WI	2
24. St. Croix, Wisconsin	Pierce and St. Croix Counties, WI	3

United States District Court for the District of Columbia

United States of America, State of Florida, State of Illinois, State of Minnesota, Commonwealth of Pennsylvania, and *State of Wisconsin,* Plaintiffs, v. *Waste Management, Inc.,* and *Advanced Disposal Services, Inc.,* Defendants.

Civil Action No.: 1:20–cv–3063
Judge: Hon. John D. Bates

Proposed Final Judgment

Whereas, Plaintiffs, United States of America and the States of Florida, Illinois, Wisconsin, and Minnesota and the Commonwealth of Pennsylvania (collectively, the ''Plaintiff States''), filed their Complaint on October 23, 2020;

And whereas, the United States, Plaintiff States, and Defendants, Waste Management, Inc. (''WMI'') and Advanced Disposal Services, Inc. (''ADS''), have consented to entry of this Final Judgment without the taking of testimony, without trial or adjudication of any issue of fact or law, and without this Final Judgment constituting any evidence against or admission by any party regarding any issue of fact or law;

And whereas, Defendants agree to make a divestiture to remedy the loss of competition alleged in the Complaint;

And whereas, Defendants represent that the divestiture and other relief required by this Final Judgment can and will be made and that Defendants will not later raise a claim of hardship or difficulty as grounds for asking the Court to modify any provision of this Final Judgment;

Now therefore, it is ordered, adjudged, and decreed:

I. Jurisdiction

The Court has jurisdiction over the subject matter of and each of the parties to this action. The Complaint states a claim upon which relief may be granted against Defendants under Section 7 of the Clayton Act, as amended (15 U.S.C. 18).

II. Definitions

As used in this Final Judgment:

A. ''Acquirer'' or ''Acquirers'' means GFL or another entity or entities to which Defendants divest the Divestiture Assets.

B. ''WMI'' means Defendant Waste Management, Inc., a Delaware corporation with its headquarters in Houston, Texas, its successors and assigns, and its subsidiaries, divisions, groups, affiliates, partnerships, and joint ventures, and their directors, officers, managers, agents, and employees.

C. ''ADS'' means Defendant Advanced Disposal Services, Inc., a Delaware corporation with its headquarters in Ponte Vedra, Florida, its successors and assigns, and its subsidiaries, divisions, groups, affiliates, partnerships, and joint ventures, and their directors, officers, managers, agents, and employees.

D. ''GFL'' means GFL Environmental Inc., a Canadian corporation with is headquarters in Ontario, Canada, its successors and assigns, and its subsidiaries, divisions, groups, affiliates, partnerships, and joint ventures, and their directors, officers, managers, agents, and employees.

E. ''Disposal'' means the business of disposing of waste into disposal sites, including the use of transfer stations to facilitate shipment of waste to other disposal sites.

F. ''MSW'' means municipal solid waste. Municipal solid waste is a term of art used to describe solid putrescible waste generated by households and commercial establishments such as retail stores, offices, restaurants, warehouses, and non-manufacturing activities in industrial facilities. MSW does not include special handling waste (*e.g.,* waste from manufacturing processes, regulated medical waste, sewage, and sludge), hazardous waste, or waste generated by construction or demolition sites.

G. ''Small Container Commercial Waste Collection'' (or ''SCCW Collection'') means the business of collecting MSW from commercial and industrial accounts, usually in ''dumpsters'' (*i.e.,* small containers with one-to-ten cubic yards of storage capacity), and transporting—or ''hauling''—that waste to a disposal site, typically by use of a front-end, side-load, or rear-end truck. Typical Small Container Commercial Waste Collection customers include office and apartment buildings and retail establishments (*e.g.,* stores and restaurants).

H. ''Residential Waste Collection'' means the business of collecting MSW from residential accounts and transporting—or ''hauling''—such waste to a disposal site, typically by use of a rear-end or side-load truck. Typical Residential Waste Collection customers include single-family residences and small apartment buildings.

I. ''Roll-Off Waste Collection'' means the business of collecting MSW that is stored in twenty-to-forty cubic yard containers from commercial and industrial accounts and transporting that waste to a disposal site, typically by use of a truck with a roll-off trailer attachment.

J. ''Commercial Recycling Collection'' means the business of collecting recyclables, which are discarded materials that will be processed and reused, from commercial and industrial accounts and transporting those recyclables to a recycling site (typically called a ''materials recovery facility,'' or ''MRF'').

K. ''Residential Recycling Collection'' means the business of collecting recyclables, which are discarded materials that will be processed and reused, from residential accounts and transporting those recyclables to a recycling site.

L. ''Mixed Collection'' or ''Co-Collect'' means the business of collecting a mixture of commercial waste, residential waste, and/or recycling and transporting such waste and/or recycling to a disposal or recycling site.

M. ''Yard Waste Collection'' means the business of collecting organic waste from single-family and small residences and transporting such waste to a disposal site.

N. ''Route'' means a group of customers receiving regularly scheduled waste or recycling collection service as of August 25, 2020, including customers from that group for whom service has been suspended due to issues related to COVID–19, and any customers added to that group between August 25, 2020 and the date that the Route is divested to an Acquirer.

O. ''Divestiture Assets'' means all of Defendants' rights, titles, and interests in and to:

1. The transfer stations and landfills listed in Appendix A;

2. all property and assets, tangible and intangible, wherever located, related to or used in connection with the transfer stations and landfills listed in Appendix A, including but not limited to:

a. All real property, including but not limited to fee simple interests, real property leasehold interests and renewal rights thereto, improvements to real property, and options to purchase any adjoining or other property, together with all offices, garages, material recovery facilities, and other related facilities;

b. all tangible personal property, including but not limited to capital equipment, trucks and other vehicles, scales, power supply equipment, and office furniture, materials, and supplies;

c. all contracts, contractual rights, and customer relationships; and all other agreements, commitments, and understandings, including but not limited to swap agreements;

d. all licenses, permits, certifications, approvals, consents, and authorizations, and all pending applications or renewals; and

e. copies of all records and data, including but not limited to customer lists, accounts, credits records, and repair and performance records;

3. the hauling facilities and Routes listed in Appendix B; and

4. all property and assets, tangible and intangible, wherever located, related to or used in connection with the Routes listed in Appendix B, including but not limited to:

a. All real property, including but not limited to fee simple interests, real property leasehold interests and renewal rights thereto, improvements to real property, and options to purchase any adjoining or other property, together with all offices, garages, and related facilities;

b. all tangible personal property, including but not limited to capital equipment, trucks and other vehicles (those assigned to Routes, and, at the option of Acquirer, all spare vehicles, containers, and supplies), scales, power supply equipment, and office furniture, materials, and supplies;

c. all contracts (except Straddle Contracts), contractual rights, and customer relationships; and all other agreements, commitments, and understandings, including but not limited to swap agreements;

d. all licenses, permits, certifications, approvals, consents, and authorizations, and all pending applications or renewals; and

e. copies of all records and data, including but not limited to customer lists, accounts, and credits records, and repair and performance records; provided, however, that the assets specified in Paragraphs II(O)(4)(a)–(e) above do not include the facilities identified in Appendix C.

P. ''Straddle Contracts'' means customer waste or recycling collection contracts that include a combination of services and/or collection stops included in the Divestiture Assets and services and/or collection stops not included in the Divestiture Assets.

Q. ''Relevant Personnel'' means all full-time, part-time, or contract employees of WMI or ADS, wherever located, involved in the MSW Disposal, Small Container Commercial Waste Collection, Residential Waste Collection, Roll-Off Waste Collection, Commercial Recycling Collection, Residential Recycling Collection, Mixed Collection, or Yard Waste Collection services provided for a Route or facility included in the Divestiture Assets at any time between April 15, 2019, and the date on which the Divestiture Assets are divested to GFL or another Acquirer. The United States, in its sole discretion, will resolve any disagreement regarding which employees are Relevant Personnel.

III. Applicability

A. This Final Judgment applies to WMI and ADS, as defined above, and all other persons, in active concert or participation with any Defendant, who receive actual notice of this Final Judgment.

B. If, prior to complying with Section IV and Section V of this Final Judgment, Defendants sell or otherwise dispose of all or substantially all of their assets or of business units that include the Divestiture Assets, Defendants must require any purchaser to be bound by the provisions of this Final Judgment. Defendants need not obtain such an agreement from the Acquirers.

IV. Divestitures

A. Defendants are ordered and directed, within thirty (30) calendar days after the Court's entry of the Asset Preservation Stipulation and Order in this matter, to divest the Divestiture Assets in a manner consistent with this Final Judgment to GFL or an alternative Acquirer acceptable to the United States, in its sole discretion, after consultation with the Plaintiff States. The United States, in its sole discretion, may agree to one or more extensions of this time period, not to exceed sixty (60) calendar days in total, and will notify the Court of any extensions.

B. Defendants must use their best efforts to divest the Divestiture Assets as expeditiously as possible and may not take any action to impede the permitting, operation, or divestiture of the Divestiture Assets.

C. Unless the United States otherwise consents in writing, divestiture pursuant to this Final Judgment must include the entire Divestiture Assets and must be accomplished in such a way as to satisfy the United States, in its sole discretion, after consultation with the Plaintiff States, that the Divestiture Assets can and will be used by Acquirer as part of a viable, ongoing MSW Disposal business and a viable, ongoing Small Commercial Container Waste Collection business and that the divestiture to Acquirer will remedy the competitive harm alleged in the Complaint.

D. The divestiture must be made to an Acquirer that, in the United States' sole judgment, after consultation with the Plaintiff States, has the intent and capability (including the necessary managerial, operational, technical, and financial capability) to compete effectively in the business of MSW Disposal and Small Container Commercial Waste Collection.

E. The divestiture must be accomplished so as to satisfy the United States, in its sole discretion, after consultation with the Plaintiff States, that none of the terms of any agreement between Acquirer and Defendants give Defendants the ability unreasonably to raise Acquirer's costs, to lower Acquirer's efficiency, or otherwise to interfere in the ability of Acquirer to compete effectively.

F. Divestiture of the Divestiture Assets may be made to one or more Acquirers, provided that it is demonstrated to the sole satisfaction of the United States, after consultation with the Plaintiff States, that the criteria required by Paragraphs IV(C), IV(D), and IV(E) will still be met.

G. In the event Defendants are attempting to divest the Divestiture Assets to an Acquirer other than GFL, Defendants promptly must make known, by usual and customary means, the availability of the Divestiture Assets. Defendants must inform any person making an inquiry regarding a possible purchase of the Divestiture Assets that the Divestiture Assets are being divested in accordance with this Final Judgment and must provide that person with a copy of this Final Judgment. Defendants must offer to furnish to all prospective Acquirers, subject to customary confidentiality assurances, all

information and documents relating to the Divestiture Assets that are customarily provided in a due-diligence process; provided, however, that Defendants need not provide information or documents subject to the attorney-client privilege or work-product doctrine. Defendants must make all information and documents available to Plaintiffs at the same time that the information and documents are made available to any other person.

H. Defendants must provide prospective Acquirers with (1) access to make inspections of the Divestiture Assets; (2) access to all environmental, zoning, and other permitting documents and information; and (3) access to all financial, operational, or other documents and information customarily provided as part of a due diligence process. Defendants also must disclose all encumbrances on any part of the Divestiture Assets, including on intangible property.

I. Defendants must cooperate with and assist Acquirer to identify and hire all Relevant Personnel.

1. Within ten (10) business days following the filing of the Complaint in this matter, Defendants must identify all Relevant Personnel to Acquirer and Plaintiffs, including by providing organization charts covering all Relevant Personnel.

2. Within ten (10) business days following receipt of a request by Acquirer or the United States, Defendants must provide to Acquirer and Plaintiffs the following additional information related to Relevant Personnel: Name; job title; current salary and benefits including most recent bonus paid, aggregate annual compensation, current target or guaranteed bonus, if any, any retention agreement or incentives, and any other payments due to or promises made to the employee; descriptions of reporting relationships, past experience, responsibilities, and training and educational histories; lists of all certifications; and all job performance evaluations. If Defendants are barred by any applicable law from providing any of this information, within ten (10) business days following receipt of the request, Defendants must provide the requested information to the full extent permitted by law and also must provide a written explanation of Defendants' inability to provide the remaining information.

3. At the request of Acquirer, Defendants must promptly make Relevant Personnel available for private interviews with Acquirer during normal business hours at a mutually agreeable location.

4. Defendants must not interfere with any effort by Acquirer to employ any Relevant Personnel. Interference includes but is not limited to offering to increase the compensation or improve the benefits of Relevant Personnel unless: (a) The offer is part of a company-wide increase in compensation or improvement in benefits that was announced prior to April 1, 2020; or (b) the offer is approved by the United States in its sole discretion. Defendants' obligations under this Paragraph will expire six (6) months after the divestiture of the Divestiture Assets pursuant to this Final Judgment.

5. For Relevant Personnel who elect employment with Acquirer within six (6) months of the date on which the Divestiture Assets are divested to Acquirer, Defendants must waive all non-compete and non-disclosure agreements, vest all unvested pension and other equity rights, provide any pay pro-rata, provide all other compensation and benefits that those Relevant Personnel have fully or partially accrued, and provide all other benefits that those Relevant Personnel otherwise would have been provided had the Relevant Personnel continued employment with Defendants, including but not limited to any retention bonuses or payments. Defendants may maintain reasonable restrictions on disclosure by Relevant Personnel of Defendants' proprietary non-public information that is unrelated to the business of MSW Disposal, Small Commercial Container Waste Collection, Residential Waste Collection, Roll-Off Waste Collection, Commercial Recycling Collection, Residential Recycling Collection, Mixed Collection, and Yard Waste Collection and not otherwise required to be disclosed by this Final Judgment.

6. For a period of twelve (12) months from the date on which the Divestiture Assets are divested to Acquirer, Defendants may not solicit to rehire Relevant Personnel who were hired by Acquirer within six (6) months of the date on which the Divestiture Assets are divested to Acquirer unless (a) an individual is terminated or laid off by Acquirer or (b) Acquirer agrees in writing that Defendants may solicit to rehire that individual. Nothing in this Paragraph prohibits Defendants from advertising employment openings using general solicitations or advertisements and rehiring Relevant Personnel who apply for an employment opening through a general solicitation or advertisement.

J. Defendants must warrant to Acquirer that (1) the Divestiture Assets will be operational and without material defect on the date of their transfer to the Acquirer; (2) there are no material defects in the environmental, zoning, or other permits pertaining to the operation of the Divestiture Assets; and (3) Defendants have disclosed all encumbrances on any part of the Divestiture Assets, including on intangible property. Following the sale of the Divestiture Assets, Defendants must not undertake, directly or indirectly, challenges to the environmental, zoning, or other permits pertaining to the operation of the Divestiture Assets.

K. Defendants must assign, subcontract, or otherwise transfer all contracts (except Straddle Contracts), agreements, and relationships (or portions of such contracts, agreements, and relationships) included in the Divestiture Assets, including but not limited to all supply and sales contracts and swap agreements, to Acquirer; provided, however, that for any contract or agreement that requires the consent of another party to assign, subcontract, or otherwise transfer, Defendants must use best efforts to accomplish the assignment, subcontracting, or transfer. Defendants must not interfere with any negotiations between Acquirer and a contracting party.

L. At the option of Acquirer, and subject to approval by the United States in its sole discretion, on or before the date on which the Divestiture Assets are divested to Acquirer, Defendants must assign, subcontract, or otherwise transfer all Straddle Contracts; provided, however, that for any Straddle Contract that requires the consent of another party to assign, subcontract, or otherwise transfer, Defendants must use best efforts to accomplish the assignment, subcontracting, or other transfer. Defendants must not interfere with any negotiations between Acquirer and a contracting party.

M. Defendants must make best efforts to assist Acquirer to obtain all necessary licenses, registrations, and permits to operate the Divestiture Assets. Until Acquirer obtains the necessary licenses, registrations, and permits, Defendants must provide Acquirer with the benefit of Defendants' licenses, registrations, and permits to the full extent permissible by law.

N. At the option of Acquirer, and subject to approval by the United States in its sole discretion, on or before the date on which the Divestiture Assets are divested to Acquirer, Defendants must enter into a contract to provide transition services for back office, human resources, accounting, employee health and safety, and information technology services and support for a

period of up to six (6) months on terms and conditions reasonably related to market conditions for the provision of the transition services. The United States, in its sole discretion, may approve one or more extensions of any contract for transition services, for a total of up to an additional six (6) months. If Acquirer seeks an extension of the term of any transition services agreement, Defendants must notify the United States in writing at least one (1) month prior to the date the contract expires. Acquirer may terminate a contract for transition services without cost or penalty at any time upon thirty (30) days' written notice to WMI. The employee(s) of Defendants tasked with providing these transition services must not share any competitively sensitive information of Acquirer with any other employee of Defendants.

O. At the option of Acquirer, and subject to approval by the United States in its sole discretion, on or before the date on which the Divestiture Assets are divested to Acquirer, Defendants must enter into a landfill disposal contract to provide rights to landfill disposal at ADS's Orchard Hills Landfill, located at 8290 Highway 251 South, Davis Junction, Illinois, 61020. The landfill disposal contract must allow Acquirer to dispose up to 1,200 tons of MSW per day at the Orchard Hills Landfill for a period of up to three (3) years from the date on which the Divestiture Assets are divested to Acquirer. Defendants must operate the Orchard Hills gates, scale houses, and disposal areas for the benefit of Acquirer under terms and conditions no less favorable than those that Defendants provide to their own vehicles. The United States, in its sole discretion, may approve one or more extensions of a landfill disposal contract for a total of up to an additional two (2) years. If Acquirer seeks an extension of the term of a landfill disposal contract, Defendants must notify the United States, the State of Illinois, and the State of Wisconsin in writing at least one (1) month prior to the date the contract expires. Acquirer may terminate a contract for landfill disposal without cost or penalty at any time upon thirty (30) days' written notice to WMI.

P. If any term of an agreement between Defendants and Acquirer to effectuate the divestiture required by this Final Judgment varies from a term of this Final Judgment, to the extent that Defendants cannot fully comply with both, this Final Judgment determines Defendants' obligations.

V. Appointment of Divestiture Trustee

A. If Defendants have not divested the Divestiture Assets within the period specified in Paragraph IV(A), Defendants must immediately notify Plaintiffs of that fact in writing. Upon application of the United States, the Court will appoint a divestiture trustee selected by the United States and approved by the Court to effect the divestiture(s) of any of the Divestiture Assets.

B. After the appointment of a divestiture trustee by the Court, only the divestiture trustee will have the right to sell the Divestiture Assets. The divestiture trustee will have the power and authority to accomplish the divestiture(s) to an Acquirer or Acquirers acceptable to the United States, in its sole discretion, after consultation with the Plaintiff States, at a price and on terms as are then obtainable upon reasonable effort by the divestiture trustee, subject to the provisions of Sections IV, V, and VI of this Final Judgment, and will have other powers as the Court deems appropriate. The divestiture trustee must sell the Divestiture Assets as quickly as possible.

C. Defendants may not object to a sale by the divestiture trustee on any ground other than malfeasance by the divestiture trustee. Objections by Defendants must be conveyed in writing to Plaintiffs and the divestiture trustee within ten (10) calendar days after the divestiture trustee has provided the notice of proposed divestiture required under Section VI.

D. The divestiture trustee will serve at the cost and expense of Defendants pursuant to a written agreement, on terms and conditions, including confidentiality requirements and conflict-of-interest certifications, that are approved by the United States.

E. The divestiture trustee may hire at the cost and expense of Defendants any agents or consultants, including but not limited to investment bankers, attorneys, and accountants, that are reasonably necessary in the divestiture trustee's judgment to assist with the divestiture trustee's duties. These agents or consultants will be accountable solely to the divestiture trustee and will serve on terms and conditions, including terms and conditions governing confidentiality requirements and conflict-of-interest certifications, that are approved by the United States.

F. The compensation of the divestiture trustee and agents or consultants hired by the divestiture trustee must be reasonable in light of the value of the Divestiture Assets and based on a fee arrangement that provides the divestiture trustee with incentives based on the price and terms of the divestiture(s) and the speed with which it is accomplished. If the divestiture trustee and Defendants are unable to reach agreement on the divestiture trustee's compensation or other terms and conditions of engagement within fourteen (14) calendar days of the appointment of the divestiture trustee by the Court, the United States may, in its sole discretion, take appropriate action, including by making a recommendation to the Court. Within three (3) business days of hiring an agent or consultant, the divestiture trustee must provide written notice of the hiring and rate of compensation to Defendants and the United States.

G. The divestiture trustee must account for all monies derived from the sale of the Divestiture Assets sold by the divestiture trustee and all costs and expenses incurred. Within thirty (30) calendar days of the date of the sale of the Divestiture Assets, the divestiture trustee must submit that accounting to the Court for approval. After approval by the Court of the divestiture trustee's accounting, including fees for unpaid services and those of agents or consultants hired by the divestiture trustee, all remaining money must be paid to Defendants and the trust will then be terminated.

H. Defendants must use their best efforts to assist the divestiture trustee to accomplish the required divestiture. Subject to reasonable protection for trade secrets, other confidential research, development, or commercial information, or any applicable privileges, Defendants must provide the divestiture trustee and agents or consultants retained by the divestiture trustee with full and complete access to all personnel, books, records, and facilities of the Divestiture Assets. Defendants also must provide or develop financial and other information relevant to the Divestiture Assets that the divestiture trustee may reasonably request. Defendants must not take any action to interfere with or to impede the divestiture trustee's accomplishment of the divestiture.

I. The divestiture trustee must maintain complete records of all efforts made to sell the Divestiture Assets, including by filing monthly reports with Plaintiffs setting forth the divestiture trustee's efforts to accomplish the divestiture ordered by this Final Judgment. The reports must include the name, address, and telephone number of each person who, during the preceding month, made an offer to acquire, expressed an interest in acquiring, entered into negotiations to acquire, or was contacted or made an inquiry about acquiring any interest in the Divestiture

Assets and must describe in detail each contact with any such person.

J. If the divestiture trustee has not accomplished the divestiture ordered by this Final Judgment within six months of appointment, the divestiture trustee must promptly provide Plaintiffs with a report setting forth: (1) The divestiture trustee's efforts to accomplish the required divestiture; (2) the reasons, in the divestiture trustee's judgment, why the required divestiture has not been accomplished; and (3) the divestiture trustee's recommendations for completing the divestiture. Following receipt of that report, the United States may make additional recommendations consistent with the purpose of the trust to the Court. The Court thereafter may enter such orders as it deems appropriate to carry out the purpose of this Final Judgment, which may include extending the trust and the term of the divestiture trustee's appointment by a period requested by the United States.

K. The divestiture trustee will serve until divestiture of all Divestiture Assets is completed or for a term otherwise ordered by the Court.

L. If the United States determines that the divestiture trustee is not acting diligently or in a reasonably cost-effective manner, the United States may recommend that the Court appoint a substitute divestiture trustee.

VI. Notice of Proposed Divestiture

A. Within two (2) business days following execution of a definitive divestiture agreement, Defendants or the divestiture trustee, whichever is then responsible for effecting the divestiture, must notify Plaintiffs of a proposed divestiture required by this Final Judgment. If the divestiture trustee is responsible for completing the divestiture, the divestiture trustee also must notify Defendants. The notice must set forth the details of the proposed divestiture and list the name, address, and telephone number of each person not previously identified who offered or expressed an interest in or desire to acquire any ownership interest in the Divestiture Assets.

B. Within fifteen (15) calendar days of receipt by the United States of this notice, the United States may request from Defendants, the proposed Acquirer(s), other third parties, or the divestiture trustee additional information concerning the proposed divestiture, the proposed Acquirer(s) and other prospective Acquirers. Defendants and the divestiture trustee must furnish the additional information requested within fifteen (15) calendar days of the receipt of the request, unless the United States provides written agreement to a different period.

C. Within forty-five (45) calendar days after receipt of the notice required by Paragraph VI(A) or within twenty (20) calendar days after the United States has been provided the additional information requested pursuant to Paragraph VI(B), whichever is later, the United States must provide written notice to Defendants and any divestiture trustee that states whether or not the United States, in its sole discretion, after consultation with the Plaintiff States, objects to Acquirer(s) or any other aspect of the proposed divestiture. Without written notice that the United States does not object, a divestiture may not be consummated. If the United States provides written notice that it does not object, the divestiture may be consummated, subject only to Defendants' limited right to object to the sale under Paragraph V(C) of this Final Judgment. Upon objection by Defendants pursuant to Paragraph V(C), a divestiture by the divestiture trustee may not be consummated unless approved by the Court.

D. No information or documents obtained pursuant to this Section VI may be divulged by Plaintiffs to any person other than an authorized representative of the executive branch of the United States or an authorized representative of the Plaintiff States, except in the course of legal proceedings to which the United States is a party, including grand-jury proceedings, for the purpose of evaluating a proposed Acquirer or securing compliance with this Final Judgment, or as otherwise required by law.

E. In the event of a request by a third party for disclosure of information under the Freedom of Information Act, 5 U.S.C. 552, the Antitrust Division will act in accordance with that statute and the Department of Justice regulations at 28 CFR part 16, including the provision on confidential commercial information at 28 CFR 16.7. Persons submitting information to the Antitrust Division should designate the confidential commercial information portions of all applicable documents and information under 28 CFR 16.7. Designations of confidentiality expire ten years after submission, ''unless the submitter requests and provides justification for a longer designation period.'' *See* 28 CFR 16.7(b).

F. If at the time that a person furnishes information or documents to the United States or the Plaintiff States pursuant to this Section VI, that person represents and identifies in writing information or documents for which a claim of protection may be asserted under Rule 26(c)(1)(G) of the Federal Rules of Civil Procedure, and marks each pertinent page of such material, ''Subject to claim of protection under Rule 26(c)(1)(G) of the Federal Rules of Civil Procedure,'' the United States and the Plaintiff States must give that person ten calendar days' notice before divulging the material in any legal proceeding (other than a grand-jury proceeding).

VII. Financing

Defendants may not finance all or any part of any Acquirer's purchase of all or part of the Divestiture Assets made pursuant to this Final Judgment.

VIII. Asset Preservation

Until the divestiture required by this Final Judgment has been accomplished, Defendants must take all steps necessary to comply with the Asset Preservation Stipulation and Order entered by the Court. Defendants must take no action that would jeopardize the divestiture ordered by the Court.

IX. Affidavits

A. Within twenty (20) calendar days of the filing of the Complaint in this matter, and every thirty (30) calendar days thereafter until the divestiture required by this Final Judgment has been completed, Defendants must deliver to Plaintiffs an affidavit, signed by each Defendant's Chief Financial Officer and General Counsel, describing the fact and manner of Defendants' compliance with this Final Judgment. The United States, in its sole discretion, may approve different signatories for the affidavits.

B. Each affidavit must include: (1) The name, address, and telephone number of each person who, during the preceding thirty (30) calendar days, made an offer to acquire, expressed an interest in acquiring, entered into negotiations to acquire, or was contacted or made an inquiry about acquiring, an interest in the Divestiture Assets and describe in detail each contact with such persons during that period; (2) a description of the efforts Defendants have taken to solicit buyers for and complete the sale of the Divestiture Assets, and to provide required information to prospective Acquirers; and (3) a description of any limitations placed by Defendants on information provided to prospective Acquirers. If the information set forth in the affidavit is true and complete, objection by the United States to information provided by Defendants to prospective Acquirers must be made within fourteen (14) calendar days of receipt of the affidavit.

C. Defendants must keep all records of any efforts made to divest the Divestiture Assets until one year after the divestiture has been completed.

D. Within twenty (20) calendar days of the filing of the Complaint in this matter, Defendants also must deliver to Plaintiffs an affidavit signed by each Defendant's Chief Financial Officer and General Counsel, that describes in reasonable detail all actions Defendants have taken and all steps Defendants have implemented on an ongoing basis to comply with Section VIII of this Final Judgment. The United States, in its sole discretion, may approve different signatories for the affidavits.

E. If Defendants make any changes to the efforts and actions outlined in any earlier affidavits provided pursuant to Paragraph IX(D), Defendants must, within fifteen (15) calendar days after any change is implemented, deliver to Plaintiffs an affidavit describing those changes.

F. Defendants must keep all records of any efforts made to preserve the Divestiture Assets until one year after the divestiture has been completed.

X. Compliance Inspection

A. For the purposes of determining or securing compliance with this Final Judgment, or of related orders such as the Asset Preservation Stipulation and Order or of determining whether this Final Judgment should be modified or vacated, upon written request of an authorized representative of the Assistant Attorney General for the Antitrust Division, and reasonable notice to Defendants, Defendants must permit, from time to time and subject to legally recognized privileges, authorized representatives, including agents retained by the United States:

1. To have access during Defendants' office hours to inspect and copy, or at the option of the United States, to require Defendants to provide electronic copies of all books, ledgers, accounts, records, data, and documents in the possession, custody, or control of Defendants relating to any matters contained in this Final Judgment; and

2. to interview, either informally or on the record, Defendants' officers, employees, or agents, who may have their individual counsel present, regarding such matters. The interviews must be subject to the reasonable convenience of the interviewee and without restraint or interference by Defendants.

B. Upon the written request of an authorized representative of the Assistant Attorney General for the Antitrust Division, Defendants must submit written reports or respond to written interrogatories, under oath if requested, relating to any of the matters contained in this Final Judgment.

C. No information or documents obtained by the United States pursuant to this Section X may be divulged by Plaintiffs to any person other than an authorized representative of the executive branch of the United States or an authorized representative of the Plaintiff States, except in the course of legal proceedings to which the United States is a party, including grand jury proceedings, for the purpose of securing compliance with this Final Judgment, or as otherwise required by law.

D. In the event of a request by a third party for disclosure of information under the Freedom of Information Act, 5 U.S.C. 552, the Antitrust Division will act in accordance with that statute and the Department of Justice regulations at 28 CFR part 16, including the provision on confidential commercial information at 28 CFR 16.7. Defendants submitting information to the Antitrust Division should designate the confidential commercial information portions of all applicable documents and information under 28 CFR 16.7. Designations of confidentiality expire ten years after submission, ''unless the submitter requests and provides justification for a longer designation period.'' *See* 28 CFR 16.7(b).

E. If at the time that Defendants furnish information or documents to the United States pursuant to this Section X, Defendants represent and identify in writing information or documents for which a claim of protection may be asserted under Rule 26(c)(1)(G) of the Federal Rules of Civil Procedure, and Defendants mark each pertinent page of such material, ''Subject to claim of protection under Rule 26(c)(1)(G) of the Federal Rules of Civil Procedure,'' the United States must give Defendants ten (10) calendar days' notice before divulging the material in any legal proceeding (other than a grand jury proceeding).

XI. Notification

A. Unless a transaction is otherwise subject to the reporting and waiting period requirements of the Hart-Scott-Rodino Antitrust Improvements Act of 1976, as amended, 15 U.S.C. 18a (the ''HSR Act''), Defendants may not, without first providing notification to the United States and to any Plaintiff State in which any of the assets or interests are located, directly or indirectly acquire (including through an asset swap agreement) any assets of or any interest, including a financial, security, loan, equity, or management interest, in any person or entity involved in MSW Disposal and/or Small Container Commercial Waste Collection services in any area identified in Appendix D, where that person's or entity's revenues for the 12 months preceding the proposed acquisition from MSW Disposal and/or Small Container Commercial Waste Collection services in the identified area were in excess of $500,000. This provision also applies to an acquisition of facilities that serve an identified area but are located outside the area and requires notice to any Plaintiff State where an identified area in the state is serviced by assets or interests to be acquired that are located outside of the state's border.

B. Defendants must provide the notification required by this Section XI in the same format as, and in accordance with the instructions relating to, the Notification and Report Form set forth in the Appendix to Part 803 of Title 16 of the Code of Federal Regulations as amended, except that the information requested in Items 5 through 8 of the instructions must be provided only about MSW Disposal and Small Container Commercial Waste Collection. Notification must be provided at least thirty (30) calendar days before acquiring any assets or interest, and must include, beyond the information required by the instructions, the names of the principal representatives who negotiated the transaction on behalf of each party and all management or strategic plans discussing the proposed transaction. If, within the thirty (30) calendar days following notification, representatives of the United States make a written request for additional information, Defendants may not consummate the proposed transaction until thirty (30) calendar days after submitting all requested information.

C. Early termination of the waiting periods set forth in this Section XI may be requested and, where appropriate, granted in the same manner as is applicable under the requirements and provisions of the HSR Act and rules promulgated thereunder. This Section XI must be broadly construed and any ambiguity or uncertainty regarding whether to file a notice under this Section XI must be resolved in favor of filing notice.

XII. Limitations on Reacquisition

Defendants may not reacquire any part of or any interest in the Divestiture Assets during the term of this Final Judgment.

XIII. Retention of Jurisdiction

The Court retains jurisdiction to enable any party to this Final Judgment to apply to the Court at any time for further orders and directions as may be necessary or appropriate to carry out or

construe this Final Judgment, to modify any of its provisions, to enforce compliance, and to punish violations of its provisions.

XIV. Enforcement of Final Judgment

A. The United States retains and reserves all rights to enforce the provisions of this Final Judgment, including the right to seek an order of contempt from the Court. Defendants agree that in a civil contempt action, a motion to show cause, or a similar action brought by the United States regarding an alleged violation of this Final Judgment, the United States may establish a violation of this Final Judgment and the appropriateness of a remedy therefor by a preponderance of the evidence, and Defendants waive any argument that a different standard of proof should apply.

B. This Final Judgment should be interpreted to give full effect to the procompetitive purposes of the antitrust laws and to restore the competition the United States and the Plaintiff States allege was harmed by the challenged conduct. Defendants agree that they may be held in contempt of, and that the Court may enforce, any provision of this Final Judgment that, as interpreted by the Court in light of these procompetitive principles and applying ordinary tools of interpretation, is stated specifically and in reasonable detail, whether or not it is clear and unambiguous on its face. In any such interpretation, the terms of this Final Judgment should not be construed against either party as the drafter.

C. In an enforcement proceeding in which the Court finds that Defendants have violated this Final Judgment, the United States may apply to the Court for a one-time extension of this Final Judgment, together with other relief that may be appropriate. In connection with a successful effort by the United States to enforce this Final Judgment against a Defendant, whether litigated or resolved before litigation, that Defendant agrees to reimburse the United States for the fees and expenses of its attorneys, as well as all other costs including experts' fees, incurred in connection with that enforcement effort, including in the investigation of the potential violation.

D. For a period of four (4) years following the expiration of this Final Judgment, if the United States has evidence that a Defendant violated this Final Judgment before it expired, the United States may file an action against that Defendant in this Court requesting that the Court order: (1) Defendant to comply with the terms of this Final Judgment for an additional term of at least four years following the filing of the enforcement action; (2) all appropriate contempt remedies; (3) additional relief needed to ensure the Defendant complies with the terms of this Final Judgment; and (4) fees or expenses as called for by this Section XIV.

XV. Expiration of Final Judgment

Unless the Court grants an extension, this Final Judgment will expire ten (10) years from the date of its entry, except that after five (5) years from the date of its entry, this Final Judgment may be terminated upon notice by the United States, after consultation with the Plaintiff States, to the Court and Defendants that the divestiture has been completed and the continuation of this Final Judgment is no longer necessary or in the public interest.

XVI. Public Interest Determination

Entry of this Final Judgment is in the public interest. The parties have complied with the requirements of the Antitrust Procedures and Penalties Act, 15 U.S.C. 16, including by making available to the public copies of this Final Judgment and the Competitive Impact Statement, public comments thereon, and any response to comments by the United States. Based upon the record before the Court, which includes the Competitive Impact Statement and, if applicable, any comments and response to comments filed with the Court, entry of this Final Judgment is in the public interest.

Date: _____

[Court approval subject to procedures of Antitrust Procedures and Penalties Act, 15 U.S.C. 16]

_____

United States District Judge

Appendix A: List of Divested Landfills and Transfer Stations (Paragraph II(O)(1))

I. Alabama

a. ADS's Stone's Throw Landfill, located at 1303 Washington Boulevard, Tallassee, Alabama 36078;

b. ADS's Turkey Trot Landfill, located at 2328 Mannish Ryan Road, Citronelle, Alabama 36522;

c. ADS's Mobile Transfer Station, located at 5740 Carole Plantation Road, Mobile, Alabama 36582;

d. ADS's Central Alabama Transfer Station, located at 2141 Hunter Loop Road, Montgomery, Alabama 36108;

e. ADS's East Alabama Transfer Station, located at 2100 Poplar Street, Opelika, Alabama 36801;

f. WMI's Phenix City Transfer Station, located at 610 State Docks Road Southeast, Phenix City, Alabama 36867.

II. Georgia

a. ADS's Eagle Point Landfill, located at 8880, 9465, 9385, and 9425 Old Federal Road, Ball Ground, Georgia 30107 and Land Lots 37, 38, 107 and 108, District 3, Canton, Georgia;

b. ADS's Gwinnett Transfer Station, located at 535 Seaboard Industrial Drive, Lawrenceville, Georgia 30046;

c. ADS's Smyrna Transfer Station, located at 4696 South Cobb Drive SE, Smyrna, Georgia 30080;

d. ADS's Welcome All Transfer Station, located at 5225 Welcome All Road, College Park, Georgia 30349;

e. ADS's Cobb County Transfer Station, located at 1897 County Services Parkway, Marietta, Georgia 30008.

III. Florida

a. ADS's Ocala Transfer Station, located at 5111 South Pine Avenue, Ocala, Florida 34479.

IV. Illinois

a. ADS's Zion Landfill, located at 701 Green Bay Road, Zion, Illinois 60099;

b. ADS's Rolling Meadows Transfer Station, located at 3851 Berdnick Street, Rolling Meadows, Illinois 60008;

c. ADS's Northbrook Transfer Station, located at 2750 Shermer Road, Northbrook, Illinois 60062;

d. WMI's Elburn Transfer Station, located at 1 N 138 Linlar Drive, Elburn, Illinois 60119.

V. Indiana

a. ADS's Hoosier Landfill, located at 2710 East 800 South Road, Claypool, Indiana 46510;

b. ADS's Fort Wayne Transfer Station, located at 4429 Allen Martin Drive, Fort Wayne, Indiana 46806.

VI. Michigan

a. ADS's Arbor Hills Landfill, located at 10690 West Six Mile Road, Northville, Michigan 48168;

b. ADS's Pontiac Transfer Station, located at 575 Collier Road, Auburn Hills, Michigan 48340;

c. ADS's Dearborn Transfer Station, located at 3051 Schaefer Road, Dearborn, Michigan 48126.

VII. Minnesota

a. ADS's Rochester Transfer Station, located at 4245 and 4225 Highway 14 East, Rochester, Minnesota 55904.

VIII. Pennsylvania

a. ADS's Sandy Run Landfill, located at 915 and 995 Landfill Road, Hopewell, Pennsylvania 16650;

b. ADS's Greentree Landfill, located at 635 Toby Road, Kersey, Pennsylvania 15846;

c. ADS Chestnut Valley Landfill, located at 1184 McClellandtown Road, McClellandtown, Pennsylvania 15458;

d. ADS's Diller Transfer Station, located at 6820 Wertzville Road, Enola, Pennsylvania 17025;

e. WMI's Southern Alleghenies Landfill, located at 843 Miller Picking Road, Davidsville, Pennsylvania 15928.

IX. Wisconsin

a. ADS's Emerald Park Landfill, located at W124 S10629 South 124th Street, Muskego, Wisconsin 53150;

b. ADS's Glacier Ridge Landfill, located at N7296 Highway V, Horicon, Wisconsin 53032;

c. ADS's Hickory Meadows Landfill, located at W3105 Schneider Road, Hilbert, Wisconsin 54129;

d. ADS's Mallard Ridge Landfill, located at W8470 State Road 11, Delavan, Wisconsin 53115;

e. ADS's Seven Mile Creek Landfill, located at 8001 Olson Drive, Eau Claire, Wisconsin 54703;

f. ADS's Waunakee Transfer Station, located at 300, 304, 306, and 308 Raemisch Road, Waunakee, Wisconsin 53597;

g. ADS's Fort Atkinson Transfer Station, located at 1203, 1205, and 1215 Klement Street, Fort Atkinson, Wisconsin 53538;

h. ADS's Kenosha Transfer Station, located at 5421 46th Street, Kenosha, Wisconsin 53144;

i. ADS's Muskego Transfer Station, located at W143 S6350, W143 6400, and W144 S6350 College Court, Muskego, Wisconsin 53150;

j. ADS's Germantown Transfer Station, located at N104 W13075 Donges Bay Road, Germantown, Wisconsin 53022;

k. ADS's West Bend Transfer Station, located at 803 North River Road and 1422 Lang Street, West Bend, Wisconsin 53095;

l. ADS's Hartland Transfer Station, located at 630 Industrial Drive, Hartland, Wisconsin 53029;

m. ADS's Omro Transfer Station, located at 250 Alder Avenue, Omro, Wisconsin 54963 and W200 Ft. of Lot 4: CSM 5477 Omro, Wisconsin 54963;

n. ADS's De Pere Transfer Station, located at 1799 County Trunk Hwy PP, De Pere, Wisconsin 54115;

o. ADS's Chilton Transfer Station (Recyclery), located at 1113 Park and 1045 Park Street, Chilton, Wisconsin 53014;

p. ADS's Door County Transfer Station, located at 1509 Division Road, Sturgeon Bay, Wisconsin 54235;

q. ADS's Medford Transfer Station, located at 645 Jensen Drive, Medford, Wisconsin 54451;

r. ADS's Roberts Transfer Station, located at 100 Packer Drive, Roberts, Wisconsin 54023;

s. ADS's Horicon Transfer Station, located at N7296 Highway V, Horicon, Wisconsin 53032;

t. ADS's Waunakee Material Recovery Facility, located at 300, 304, 306, and 308 Raemisch Road, Waunakee, Wisconsin 53597;

u. WMI's Janesville Transfer Station, located at 304 West Sunny Lane, Janesville, Wisconsin 53546;

v. WMI's Darlington Transfer Station, located at 11500 Ames Road, Darlington, Wisconsin 53530;

w. WMI's Mosinee Transfer Station, located at 204500 State Highway 34 (*i.e.,* 1372 State Highway 34), Mosinee, Wisconsin 54455;

x. WMI's Antigo Transfer Station, located at 1715 Deleglise Street, Antigo, Wisconsin 54409;

y. WMI's Chippewa Falls Transfer Station, located at 11888 & 11863 30th Avenue, Chippewa Falls, Wisconsin 54729;

z. WMI's Sheboygan Falls Transfer Station, located at 115 Birch Road, Sheboygan Falls, Wisconsin 53085.

Appendix B: List of Divested Hauling Facilities and Routes (Paragraph II(O)(3))

I. Alabama

a. The following ADS Small Container Commercial Waste Collection Routes:

i. Tuscaloosa Routes: 710, 711, 712, and 713;

ii. Montgomery/Tallassee/Alexander City Routes: 901, 902, 908, 950, 951, 952, 953, 954, 956, 957, 958, 959, 960, and 961;

iii. Mobile Routes: 900, 901, 910, 920, and 925;

b. The following ADS Residential Waste Collection Routes:

i. Montgomery/Tallassee/Alexander City Routes: 605, 606, 612, 613, 616, 622, 623, and 624;

c. The following ADS Roll-Off Waste Collection Routes:

i. Montgomery/Tallassee/Alexander City Routes: 409 (*i.e.* ''Alex City Roll Off'');

d. ADS's hauling facility located at 1121 Wilbanks Street, Montgomery, Alabama 36108;

e. ADS's hauling facility located at 1303 Washington Boulevard, Tallassee, Alabama 36078;

f. ADS's hauling facility located at 4701 12th Street Northeast, Tuscaloosa, Alabama 35404;

g. ADS's hauling facility located at 6225 Rangeline Road, Theodore, Alabama 36582;

h. ADS's hauling facility located at 4342 Washington Street, Alexander City, Alabama 35010.

II. Georgia

a. The following ADS Small Container Commercial Waste Collection Routes:

i. Augusta routes: 901, 904, 905, 907, 908, 909, 910, and 911;

b. ADS's hauling facility located at 1064 Franke Industrial Drive, Augusta, Georgia 30909.

III. Florida

a. The following ADS Small Container Commercial Waste Collection Routes:

i. Ocala Routes: 701, 702, 704, and 706;

ii. Jacksonville Routes: 901, 902, 906, 907, 908, 910, 911, 913, 918, 922;

b. The following WMI Small Container Commercial Waste Collection Routes:

i. St. Johns and Clay County Routes: J181, J281, J381, J481, J581, J681, J189, J289, J389, J489, J589, J689;

ii. Citrus County Routes: W180, W280, W380, W480, W580, W680, W186, and W475;

c. ADS's hauling facility located at 5111 South Pine Avenue, Ocala, Florida 34480;

d. ADS's hauling facility located at 7580 Philips Highway, Jacksonville, Florida 32256.

IV. Michigan

a. The following ADS Small Container Commercial Waste Collection Routes:

i. Pontiac Routes: 751, 752, 753, 754, 755, 756, 757, 758, 759, 763, 765, 766, and 767;

b. The following ADS Residential Waste Collection Routes:

i. Pontiac Routes: 403, 405, 493, 495, 500, 501, 502, 503, 504, 505, 506, 509, 514, 592, 595, 596, and 599;

c. The following ADS Yard Waste Collection Routes:

i. Pontiac Routes: 301, 401, 402, 492, 498, and 901;

d. The following ADS Commercial Recycling Collection Routes:

i. Pontiac Routes: 511, 771, and 772;

e. The following ADS Residential Recycling Collection Routes:

i. Pontiac Routes: 507, 508, 597, and 598;

f. The following ADS Roll-Off Waste Collection Routes:

i. Pontiac Routes: 601, 602, 603, 604, 605, 606, 622, 651, 652, 653, 654, 655, 656, 657, 658, 659, and 670;

g. ADS hauling facility located at 575 Collier Road, Auburn Hills, Michigan 48340.

V. Minnesota

a. The following ADS Small Container Commercial Waste Collection Routes:

i. St. Cloud Routes: 710, 720, 730, and 740;

ii. Rochester Routes: 701, 705, 709, 711, 730, and 750;

b. ADS's hauling facility located at 2355 12th Street Southeast, St. Cloud, Minnesota 56304;

c. ADS's hauling facility located at 4245 and 4225 Highway 14 East, Rochester, Minnesota 55904.

VI. Pennsylvania

a. The following ADS Small Container Commercial Waste Collection Routes:

i. McClellandtown Routes: 711, 712, and 713;

b. The following ADS Residential Waste Collection Routes:

i. McClellandtown Routes: 153, 154, 440, 443, 444, 447, 449, 451, 454, and 459;

c. The following ADS Commercial Recycling Collection Routes:

i. McClellandtown Routes: 725 and 811;

d. The following ADS Residential Recycling Collection Routes:

i. McClellandtown Routes: 801 and 805;

e. The following ADS Roll-Off Waste Collection Routes:

i. McClellandtown Routes: 603;

f. ADS's hauling facility located at 1192 McClellandtown Road, McClellandtown, Pennsylvania 15458.

VII. Wisconsin

a. The following ADS Small Container Commercial Waste Collection Routes:

i. Beloit Routes: 100;

ii. Madison Routes: 100, 101, 102, 103, 104, 105, 106, 107, 108, 109, 301, and 401;

iii. Hartland Routes: 701, 702, 703, 704, 705, 706, 707, 708, 740, 741, and 742;

iv. Muskego Routes: 505, 924, 980, 981, 982, 983, 984, 985, 986, 987, 988, 989, 990, 991, 992, 993, 994, 995, 996, 997, 998, and 999;

v. West Bend and Horicon Routes: 705, 711, 725, 760, 761, 765, 766, 767, 771, 776, and 777;

vi. Omro Routes: 150, 151, 152, 153, 154, 155, 156, 157, 700, 702, 739, 742, 744, 745, 747, 748, and 778;
vii. Green Bay Routes: 701, 702, 703, 704, 705, 706, 707, 708, 709, 714, and 751;
viii. Chilton and Kaukauna Routes: 702, 703, 704, 705, 710, 711, 712, 713, and 714;
ix. Fort Atkinson Routes: 151, 152, 351, 352, and 353;
x. Door County Routes: 710 and 711;
xi. Medford Routes: 422 and 423;
xii. Waukegan Routes: 704, 708, and 709;
b. The following WMI Small Container Commercial Waste Collection Routes:
i. Antigo Routes: O1AA, O1EE, O2DD, O2EE, O2FF, O3AA, O3EE, O4AA, O4DD, and O5EE;
ii. Chippewa Falls Routes: K1A1, K2A1, K3A1, K3A3, K4A3, K5A1, and K5A3;
iii. Darlington Routes: F1A2, F2A3, and F5A3;
iv. Sheboygan Routes: W1A7, W2A7, W3A7, W4A7, and W5A7;
v. Janesville Routes: H1GC, H1GD, H1GF, H2GC, H2GA, H2GD, H2GF, H3GF, H3GC, H3GD, H4GD, H4GA, H4GC, H4GF, H5GF, H5GC, H5GA, H5GD, H5GE, H6PZ, and H6QZ;
vi. Mosinee Routes: G1A1, G1A2, G1A3, G1A4, G1A5, G2A1, G2A2, G2A4, G2A5, G2A6, G3A1, G3A2, G3A3, G3A4, G3A5, G4A1, G4A5, G5A1, G5A2, G5A3, G5A4, G5A5, and G1M1;
c. The following ADS Co-Collect Routes:
i. Green Bay Routes: 711, 712, 713, 715, 716, 717, and 719;
ii. Fort Atkinson Routes: 589;
iii. Door County Routes: 500, 501, 502, 503, and 504;
d. The following ADS Mixed Collection Routes:
i. Eau Claire Routes: 442;
e. The following ADS Residential Waste Collection Routes:
i. Muskego Routes: 011, 504, 524, 525, 526, 527, 528, 529, 530, 536, 537, 541, 542, 548, 549, 550, 553, 595, and 599;
ii. Green Bay Routes: 500, 501, 502, 503, 504, 505, 506, 508, 509, 510, 512, 513, 514, 516, and 714;
iii. Fort Atkinson Routes: 551, 553, 554, 555, 557, 558, 559, 560, 562, and 571;
f. The following ADS Residential Recycling Collection Routes:
i. Muskego Routes: 556, 584, 585, 701, 702, 703, 705, 707, 708, 709, 710, 711, 727, 735, 741, and 755;
ii. Green Bay Routes: 800, 801, 802, 803, 804, 805, 806, 807, 808, and 809;
iii. Fort Atkinson Routes: 653, 658, 659, 671, 672, 673, 674, 676, 677, and 680;
g. The following ADS Roll-Off Waste Collection Routes:
i. Door County Routes: 606;
h. The following ADS Commercial Recycling Collection Routes:
i. Beloit Routes: 200;
ii. Madison Routes: 201, 202, 203, 204, 205, 206, 207, and 208;
iii. Hartland Routes: 815, 865, 885, 886, 888, 889, and 890;
iv. Muskego Routes: 014, 015, 017, 018, 019, 020, 021, 022, 023, 024, 025, and 026;
v. West Bend and Horicon Routes: 706, 751, 778, 780, 781, 782, 783, and 791;
vi. Omro Routes: 150, 152, 153, 154, 155, 156, 157, 779, 896, and 898;
vii. Green Bay Routes: 720, 721, 722, 723, 724, 725, and 726;
viii. Waukegan Routes: 725 and 751;
ix. Chilton and Kaukauna Routes: 401, 721, 722, 723, 724, 725, 730, and 731;
x. Fort Atkinson Routes: 251, 252, 254, and 451;
xi. Door County Routes: 710 and 711;
xii. Medford Routes: 428 and 448;
i. The following WMI Commercial Recycling Collection Routes:
i. Antigo Routes: O1CC, O3DD, O3CC, O4CC, and O5CC;
ii. Chippewa Falls Routes: K1A2, K2A2, K3A2, K4A2, and K5A2;
iii. Darlington Routes: F3S1;
iv. Sheboygan Routes: W2S2 and W5S2;
v. Janesville Routes: H1IB, H1IC, H2IB, H3IB, H3IC, H4IB, H5IF, H5IC, and H5IB;
vi. Mosinee Routes: G1G2, G1G4, G2G1, G2G3, G3G1, G3G4, G4A4, G4G1, G4G2, G4G3, G4G4, G5G1, and G5G4;
j. ADS's hauling facility located at W143 S 6440 College Court, Muskego, Wisconsin 53150;
k. ADS's hauling facility located at N7296 Highway V, Horicon, Wisconsin 53032;
l. ADS's hauling facility located at 803 North River Road and 1422 Lang Street, West Bend, Wisconsin 53095;
m. ADS's hauling facility located at 250 Alder Avenue, Omro, Wisconsin 54963;
n. ADS's hauling facility located at 1799 County Trunk Highway, De Pere, Wisconsin 54115;
o. ADS's hauling facility located at 428 High Street, Chilton, Wisconsin 53014;
p. ADS's hauling facility located at N2016 Vandenbroek Road, Kaukauna, Wisconsin 54130;
q. ADS's hauling facility located at 1509 Division Road, Sturgeon Bay, Wisconsin 54235;
r. ADS's hauling facility, located at 630 Industrial Drive, Hartland, Wisconsin 53029;
s. ADS's hauling facility located at 645 Jensen Drive, Medford, Wisconsin 54451;
t. ADS's hauling facility located at 300, 304, 306, and 308 Raemisch Road, Waunakee, Wisconsin 53597;
u. ADS's hauling facility located at 1203, 1205, and 1215 Klement Street, Fort Atkinson, Wisconsin 53538;
v. WMI's hauling facility located at 204500 State Highway 34 (*i.e.,* 1372 State Highway 34), Mosinee, Wisconsin 54455;
w. WMI's hauling facility located at 1715 Deleglise Street, Antigo, Wisconsin 54409;
x. WMI's hauling facility located at 11888 & 11863 30th Avenue, Chippewa Falls, Wisconsin 54729;
y. WMI's hauling facility located at 304 West Sunny Lane, Janesville, Wisconsin 53546;
z. WMI's hauling facility located at 11500 Ames Road, Darlington, Wisconsin 53530.

Appendix C: List of Retained Hauling Facilities (Paragraph II(O)(4)(e))

I. Florida

a. WMI's hauling facility located at 8708 NE 44th Drive, Wildwood, Florida 34785;
b. WMI's hauling facility located at 6501 Greenland Road, Jacksonville, Florida 32258.

II. Wisconsin

a. ADS's hauling facility located at 2301 W B R Townline Road, Beloit, Wisconsin 53511;
b. WMI's hauling facility located at 301 Thomas Street, Fond du Lac, Wisconsin 54935;
c. ADS's hauling facility located at 2626 Mondovi Road, Eau Claire, Wisconsin 54701;
d. ADS's hauling facility located at 559 Progress Drive, Hartland, Wisconsin 53029.

III. Illinois

a. ADS's hauling facility located at 2230 Ernie Krueger Circle, Waukegan, Illinois 60087.

IV. Georgia

a. ADS's hauling facility located at 5734 Columbia Road, Grovetown, GA 30813.

Appendix D: Areas for Which the Notice Provision in Paragraph XI(A) Applies

Geographic market	Counties/municipalities within geographic market	Relevant service
East Central, Alabama	Lee and Macon Counties, AL	MSW Disposal.
Lee County, Alabama	Lee County, AL	SCCW Collection.
Macon County, Alabama	Macon County, AL	SCCW Collection.
Mobile, Alabama	City of Mobile, AL	SCCW Collection and MSW Disposal.
Montgomery County, Alabama	Montgomery County, AL	SCCW Collection.
Phenix City, Alabama	Phenix City, AL	MSW Disposal.
Tuscaloosa, Alabama	City of Tuscaloosa, AL	SCCW Collection.
Jacksonville, Florida	Duvall, St. Johns, and Clay Counties, FL	SCCW Collection.
Ocala, Florida	Marion and Citrus Counties, FL	SCCW Collection and MSW Disposal.
Atlanta, Georgia	Cherokee, Forsyth, Gwinnett, Fulton, Clayton, and Cobb Counties, GA.	MSW Disposal.
Augusta, Georgia	Columbia and Richmond Counties, GA and Edgefield and Aiken Counties, SC.	SCCW Collection.
Kane County, Illinois	Kane County, IL	MSW Disposal.

Geographic market	Counties/municipalities within geographic market	Relevant service
Lake County, Illinois	Lake County, IL	MSW Disposal.
Northern Cook County, Illinois	Area west of Interstate 94 and north of Interstate 90 in Cook County, Illinois.	MSW Disposal.
Fort Wayne, Indiana	Allen, Kosciusko, and Whitley Counties, IN	MSW Disposal.
Detroit, Michigan	Wayne, Macomb and Oakland Counties, MI	MSW Disposal.
Rochester, Minnesota	City of Rochester, MN	SCCW Collection.
St. Cloud, Minnesota	City of St. Cloud, MN	SCCW Collection.
State College, Pennsylvania	Centre and Clearfield Counties, PA	MSW Disposal.
Indiana County, Pennsylvania	Clarion, Jefferson, and Indiana Counties, PA	MSW Disposal.
Fayette County, Pennsylvania	Fayette and Greene Counties, PA	MSW Disposal.
Somerset County, Pennsylvania	Cambria and Somerset Counties, PA	MSW Disposal.
Bedford County, Pennsylvania	Bedford County, PA	MSW Disposal.
Greater Green Bay, Appleton, Oshkosh, Wisconsin	Brown, Outagamie, and Winnebago Counties, WI	MSW Disposal.
Calumet County, Wisconsin	Calumet County, WI	SCCW Collection.
Clark, Wisconsin	Clark and Taylor Counties, WI	SCCW Collection.
Dane County, Wisconsin	Dane County, WI	SCCW Collection and MSW Disposal.
Eau Claire, Wisconsin	Chippewa and Eau Claire Counties, WI	SCCW Collection and MSW Disposal.
Fond du Lac and Sheboygan, Wisconsin	Dodge, Fond du Lac, Ozaukee, Sheboygan, and Washington Counties, WI.	SCCW Collection and MSW Disposal.
Greater Manitowoc, Wisconsin	Calumet, Kewaunee, and Manitowoc Counties, WI	MSW Disposal.
Green Bay, Wisconsin	Brown and Outagamie Counties, WI	SCCW Collection.
Green County, Wisconsin	Green County, WI	SCCW Collection and MSW Disposal.
Green Lake, Wisconsin	Columbia, Green Lake, and Marquette Counties, WI.	SCCW Collection.
Jackson County, Wisconsin	Jackson County, WI	SCCW Collection.
Janesville, Wisconsin	Jefferson, Rock, and Walworth Counties, WI	MSW Disposal.
Jefferson County, Wisconsin	Jefferson County, WI	SCCW Collection.
Kenosha County, Wisconsin	Kenosha County, WI	SCCW Collection.
Kewaunee County, Wisconsin	Kewaunee County, WI	SCCW Collection.
Langlade, Wisconsin	Langlade, Lincoln, Oneida, and Shawano Counties, WI.	SCCW Collection.
Manitowoc County, Wisconsin	Manitowoc County, WI	SCCW Collection.
Mar-Oco, Wisconsin	Marinette and Oconto Counties, WI	SCCW Collection.
Marathon, Wisconsin	Marathon, Portage, and Wood Counties, WI	SCCW Collection.
Milwaukee, Wisconsin	Milwaukee, Racine, and Waukesha Counties, WI	SCCW Collection and MSW Disposal.
Price County, Wisconsin	Price County, WI	SCCW Collection.
Rock County, Wisconsin	Rock County, WI	SCCW Collection.
Sauk County, Wisconsin	Sauk County, WI	SCCW Collection.
St. Croix, Wisconsin	Pierce and St. Croix Counties, WI	MSW Disposal.
Walworth County, Wisconsin	Walworth County, WI	SCCW Collection.
Waupaca, Wisconsin	Waupaca County, WI	SCCW Collection.
Waushara, Wisconsin	Waushara and Winnebago Counties, WI	SCCW Collection.

United States District Court for the District of Columbia

United States of America, State of Florida, State of Illinois, State of Minnesota, Commonwealth of Pennsylvania, and *State of Wisconsin,* Plaintiffs, v. *Waste Management, Inc.* and *Advanced Disposal Services, Inc.,* Defendants.

Civil Action No.: 1:20–cv–3063
Judge: Hon. John D. Bates

Competitive Impact Statement

The United States of America, under Section 2(b) of the Antitrust Procedures and Penalties Act, 15 U.S.C. 16(b)–(h) (the ''APPA'' or ''Tunney Act''), files this Competitive Impact Statement relating to the proposed Final Judgment submitted for entry in this civil antitrust proceeding.

I. Nature and Purpose of the Proceeding

On April 14, 2019, Waste Management, Inc (''WMI'') agreed to acquire Advanced Disposal Services, Inc. (''ADS'') for approximately $4.9 billion. On June 24, 2020, WMI and ADS agreed to a revised purchase price of approximately $4.6 billion. The United States, the States of Florida, Illinois, Minnesota, and Wisconsin, and the Commonwealth of Pennsylvania (the ''Plaintiff States'') filed a civil antitrust Complaint on October 23, 2020, seeking to enjoin the proposed acquisition. The Complaint alleges that the likely effect of this acquisition would be to substantially lessen competition for Small Container Commercial Waste (''SCCW'') collection or municipal solid waste (''MSW'') disposal in 57 geographic markets in the eastern United States in violation of Section 7 of the Clayton Act, 15 U.S.C. 18.

At the same time the Complaint was filed, the United States and the Plaintiff States filed an Asset Preservation Stipulation and Order (''Stipulation and Order'') and proposed Final Judgment, which are designed to remedy the loss of competition alleged in the Complaint. Under the proposed Final Judgment, which is explained more fully below, Defendants are required to divest specified SCCW collection and MSW disposal assets in ten different states. Under the terms of the Stipulation and Order, Defendants will take certain steps to ensure that the assets to be divested are operated in such a way as to ensure that the assets continue to be ongoing, economically viable, and active competitors in the provision of Small Container Commercial Waste Collection and MSW Disposal, and that the assets maintain full economic viability, marketability, and competitiveness during the pendency of the required divestiture.

The United States and Defendants have stipulated that the proposed Final Judgment may be entered after compliance with the APPA. Entry of the proposed Final Judgment will terminate this action, except that the Court will retain jurisdiction to construe, modify, or enforce the provisions of the

proposed Final Judgment and to punish violations thereof.

II. Description of Events Giving Rise to the Alleged Violation

A. The Defendants and the Proposed Transaction

WMI is a Delaware corporation headquartered in Houston, Texas. WMI is the largest solid waste hauling and disposal company in the United States and provides waste collection, recycling, and disposal (including transfer) services. WMI operates in 49 states and the District of Columbia. For 2019, WMI reported revenues of approximately $15.5 billion.

ADS is a Delaware corporation headquartered in Ponte Vedra, Florida. It is the fourth-largest solid waste hauling and disposal company in the United States and provides waste collection, recycling, and disposal (including transfer) services. ADS operates in 16 states, primarily in the Midwest, Mid-Atlantic, and Southeast regions of the United States. For 2019, ADS reported revenues of approximately $1.6 billion.

On April 14, 2019, WMI agreed to acquire all of the outstanding common stock of ADS for approximately $4.9 billion. On June 24, 2020, WMI and ADS agreed to a revised purchase price of approximately $4.6 billion.

B. Relevant Product Markets

1. Small Container Commercial Waste Collection

As alleged in the Complaint, SCCW (small container commercial waste) collection is a relevant product market. Waste collection firms—also called haulers—collect MSW (municipal solid waste) from residential, commercial, and industrial establishments, and transport that waste to a disposal site, such as a transfer station, landfill or incinerator, for processing and disposal.

SCCW collection is the business of collecting MSW from commercial and industrial accounts, usually in small containers (*i.e.,* dumpsters with one to ten cubic yards capacity), and transporting or hauling that waste to a disposal site. Typical SCCW collection customers include office and apartment buildings and retail establishments (*e.g.,* stores and restaurants).

SCCW collection is distinct from the collection of other types of waste such as residential and roll-off waste, each of which is subject to its own regulatory scheme dictating the manner in which it must be collected. An individual commercial customer typically generates substantially more MSW than a residential customer. To handle this high volume of MSW efficiently, haulers often provide commercial customers with small containers for storing the waste. Haulers organize their commercial accounts into routes, and collect and transport the MSW generated by these accounts in front-end load (''FEL'') trucks uniquely well suited for commercial waste collection.

On a typical SCCW collection route, an operator drives a FEL truck to the customer's container, engages a mechanism that grasps and lifts the container over the front of the truck, and empties the container into the vehicle's storage section where the waste is compacted and stored. The operator continues along the route, collecting MSW from each of the commercial accounts, until the vehicle is full. The operator then drives the FEL truck to a disposal facility, such as a transfer station, landfill, or incinerator, and empties the contents of the vehicle. Depending on the number of locations and amount of waste collected on the route, the operator may make one or more trips to the disposal facility in servicing the route.

In contrast to an SCCW collection route, a residential waste collection route is highly labor intensive. A residential customer's MSW is typically stored in much smaller containers, (*e.g.,* garbage bags or trash cans) and instead of using an FEL manned by a single operator, residential waste collection haulers routinely use rear-end load or side-load trucks manned by two- or three-person teams. On residential routes, crews often hand-load the customer's MSW by tossing garbage bags and emptying trash cans into the vehicle's storage section. In light of these differences, haulers typically organize commercial customers into separate routes from residential customers.

Roll-off collection also is not a substitute for SCCW collection. A roll-off container is much larger than an SCCW container, and is serviced by a truck capable of carrying a roll-off container rather than an FEL. Unlike SCCW customers, multiple roll-off customers are not served between trips to the disposal site because each roll-off truck is typically capable of carrying only one roll-off container at a time.

Other types of waste collection, such as hazardous or medical waste collection, also are not substitutes for SCCW collection. These forms of collection differ from SCCW collection in the hauling equipment required, the volume of waste collected, and the facilities where the waste is disposed.

The Complaint alleges that, absent competition from other SCCW collection firms, SCCW collection providers could profitably increase their prices without losing significant sales to firms engaged in the provision of other types of waste collection services. In other words, in the event of a small but significant price increase for SCCW collection, customers would not substitute to other forms of collection in sufficient numbers so as to render the price increase unprofitable. Accordingly, the Complaint alleges that SCCW collection is therefore a line of commerce, or relevant product market, for purposes of analyzing the effects of the acquisition under Section 7 of the Clayton Act.

2. Municipal Solid Waste Disposal

As alleged in the Complaint, MSW disposal is a relevant product market. MSW is solid putrescible waste generated by households and commercial establishments such as retail stores, offices, restaurants, warehouses, and industrial facilities. MSW has physical characteristics that readily distinguish it from other liquid or solid waste (*e.g.,* waste from manufacturing processes, regulated medical waste, sewage, sludge, hazardous waste, or waste generated by construction or demolition sites).

Haulers must dispose of all MSW at a permitted disposal facility. There are three main types of disposal facilities—landfills, incinerators, and transfer stations. Such facilities must be located on approved types of land and operated under prescribed procedures. Federal, state, and local safety, environmental, zoning, and permit laws and regulations dictate critical aspects of storage, handling, transportation, processing and disposal of MSW. In less densely populated areas, MSW often is disposed of directly into landfills that are permitted and regulated by a state and the federal government. Landfill permit restrictions often impose limitations on the type and amount of waste that can be deposited. In many urban and suburban areas, however, landfills are scarce due to high population density and the limited availability of suitable land. As a result, MSW generated in such areas often is burned in an incinerator or taken to a transfer station. A transfer station is an intermediate disposal site for the processing and temporary storage of MSW before it is transferred, in bulk, to more distant landfills or incinerators for final disposal.

Some haulers—including WMI and ADS—are vertically integrated and operate their own disposal facilities. Vertically-integrated haulers often prefer to dispose of waste at their own

disposal facilities. Depending on the market, vertically-integrated haulers may sell a portion of their disposal capacity to customers in need of access to a disposal facility. These disposal customers include independent (non-vertically integrated) and municipally-owned haulers. Disposal customers rely on the availability of cost-competitive disposal capacity to serve their own collection customers and to compete for new ones.

According to the Complaint, due to strict laws and regulations that govern the disposal of MSW, there are no reasonable substitutes for MSW disposal, which must occur at landfills, incinerators, or transfer stations. Thus, in the event of a small but significant price increase from MSW disposal firms, customers would not substitute to other forms of disposal in sufficient numbers so as to render the price increase unprofitable. Accordingly, the Complaint alleges that MSW disposal is a line of commerce, or relevant product market, for purposes of analyzing the effects of the acquisition under Section 7 of the Clayton Act.

C. Relevant Geographic Markets

1. Small Container Commercial Waste Collection

As alleged in the Complaint, SCCW collection generally is provided in highly localized areas. This is because a hauler needs a large number of commercial accounts that are reasonably close together to operate efficiently and profitably. If there is significant travel time between customers, then the hauler earns less money for the time that the truck operates. Haulers, therefore, try to minimize the ''dead time'' in which the truck is operating and incurring costs from fuel, wear and tear, and labor, but not generating revenue from collecting waste. Likewise, customers must be near the hauler's base of operations as it would be unprofitable for a truck to travel a long distance to the start of a route. Haulers, therefore, generally establish garages and related facilities to serve as bases within each area served.

As alleged in the Complaint, as currently contemplated, the transaction would likely cause harm in 33 relevant geographic markets for SCCW collection located in six states: Alabama, Florida, Georgia, South Carolina, Minnesota, and Wisconsin (identified in Appendix A). In each of these markets, a hypothetical monopolist of SCCW collection could profitably impose a small but significant non-transitory increase in price to local customers without losing significant sales to more distant competitors. Accordingly, the Complaint alleges that each of the areas listed in Appendix A constitutes a relevant geographic market and section of the country for purposes of analyzing the effects of the acquisition under Section 7 of the Clayton Act.

2. Municipal Solid Waste Disposal

Collection trucks transport MSW to landfills, incinerators, and transfer stations for disposal. The price and availability of disposal sites close to a hauler's routes are major factors that determine a hauler's competitiveness and profitability, as the cost of transporting MSW to a disposal site—including fuel, regular truck maintenance, and hourly labor—is a substantial component of the total cost of disposal. Haulers also prefer nearby disposal sites to minimize the FEL dead time. Due to the costs associated with travel time and customers' preference to have disposal sites close by, an MSW disposal provider must have local disposal facilities to be competitive. The relevant markets for MSW disposal markets are therefore local, often consisting no more than a few counties.

As alleged in the Complaint, as currently contemplated, the transaction would likely cause harm in 24 relevant geographic markets for MSW disposal located in eight states: Alabama, Florida, Georgia, Illinois, Indiana, Michigan, Pennsylvania, and Wisconsin (identified in Appendix B). In each of these local markets, a hypothetical monopolist of MSW disposal could profitably impose a small but significant non-transitory increase in price for the disposal of MSW without losing significant sales to more distant disposal sites.

Accordingly, the Complaint alleges that each of the areas listed in Appendix B constitutes a relevant geographic market and section of the country for purposes of analyzing the effects of the acquisition under Section 7 of the Clayton Act.

D. Anticompetitive Effects of the Proposed Transaction

According to the Complaint, the proposed transaction would substantially lessen competition and harm consumers in each alleged relevant market by eliminating the substantial head-to-head competition that currently exists between WMI and ADS. Businesses, municipalities, independent haulers, and other customers would pay higher prices as a result of the acquisition.

WMI's acquisition of ADS would remove a significant competitor for SCCW collection and MSW disposal in markets that are already highly concentrated and difficult to enter. WMI and ADS compete head-to-head for SCCW collection and/or MSW disposal customers in each of the 57 geographic markets identified in Appendices A and B. In these geographic markets, WMI and ADS each account for a substantial share of total revenue generated from SCCW collection and/or MSW disposal and, in each relevant market, are two of no more than four significant (*i.e.,* not fringe) competitors. *See* Appendices A and B (providing a complete list of the number of significant competitors in each relevant market pre-merger). In each SCCW collection market alleged, collection customers including offices, apartment buildings, and retail establishments, have been able to secure better collection rates and improved service by threatening to switch to the competing SCCW hauler. Likewise, in each MSW disposal market alleged, independent haulers and municipalities have been able to negotiate more favorable disposal rates by threatening to move waste to the other competitor's disposal facilit(ies). In each of the relevant markets identified in Appendices A and B, the resulting increase in concentration, loss of competition, and the unlikeliness of significant entry or expansion would likely result in higher prices, lower quality and level of service, and reduced choice for SCCW collection and MSW disposal customers.

E. Difficulty of Entry

1. Difficulty of Entry Into Small Container Commercial Waste Collection

According to the Complaint, entry of new competitors into SCCW collection in each of the relevant markets identified in Appendix A would be difficult and time-consuming and is unlikely to prevent the harm to competition that is likely to result if the proposed transaction is consummated.

A new entrant in SCCW collection could not provide a significant competitive constraint on the prices that market incumbents charge until achieving a minimum efficient scale and operating efficiency comparable to existing competitors. In order to obtain a comparable operating efficiency, a new competitor would have to achieve route densities similar to those of firms already in the market. Incumbents in a geographic market, however, can prevent new entrants from winning a large enough base of customers by selectively lowering prices and entering into longer term contracts with collection customers.

2. Difficulty of Entry Into Municipal Solid Waste Disposal

According to the Complaint, entry of new competitors into MSW disposal in each of the relevant markets identified in Appendix B would be difficult and time-consuming and is unlikely to prevent the harm to competition that is likely to result if the proposed transaction is consummated.

A new entrant in MSW disposal would need to obtain a permit to construct a disposal facility or to expand an existing one, and this process is costly and time-consuming, typically taking many years. Land suitable for MSW disposal is scarce as a landfill must be constructed away from environmentally-sensitive areas, including fault zones, wetlands, flood plains, and other restricted areas. Even when suitable land is available, local public opposition frequently increases the time and uncertainty of the permitting process. Construction of a new transfer station or incinerator also is difficult and time consuming and faces many of the same challenges as new landfill construction, including local public opposition.

Entry by constructing and permitting a new MSW disposal facility would thus be costly and time-consuming and unlikely to prevent market incumbents from significantly raising prices for MSW disposal in each of the disposal markets following the acquisition.

III. Explanation of the Proposed Final Judgment

The divestitures required by the proposed Final Judgment will remedy the loss of competition alleged in the Complaint by establishing an independent and economically viable competitor in each of the SCCW collection and MSW disposal markets alleged in the Complaint.

Paragraph IV(A) of the proposed Final Judgment requires that the Divestiture Assets (capitalized terms are defined in the proposed Final Judgment) be divested within 30 days after the entry of the Stipulation and Order by the court to GFL Environmental Inc., or an alternative Acquirer acceptable to the United States, in its sole discretion, after consultation with the Plaintiff States. The assets must be divested in such a way as to satisfy the United States in its sole discretion, after consultation with the Plaintiff States, that the assets can and will be operated by the purchaser as a viable, ongoing SCCW collection and MSW disposal business that can compete effectively in each of the markets alleged in the Complaint.

The Divestiture Assets are defined as all tangible and intangible assets relating to or used in connection with the MSW disposal assets identified in Paragraphs II(O)(1) and II(O)(2) of the proposed Final Judgment and the SCCW collection assets identified in Paragraphs II(O)(3) and II(O)(4) of the proposed Final Judgment. The Divestiture Assets include 15 landfills, 37 transfer stations, 29 hauling locations, and over 200 Routes. The Divestiture Assets also include, *inter alia,* in each MSW disposal market alleged: All tangible and intangible property and assets related to or used in connection with the transfer stations and landfills, and in each SCCW collection market alleged: All intangible and tangible assets related to or used in connection with the Routes except for what the proposed Final Judgment defines as Straddle Contracts and the hauling facilities identified in Appendix C.

Paragraph IV(K) of the proposed Final Judgment facilitates the transfer of customers and other contractual relationships, except for Straddle Contracts, to the Acquirer. Defendants must transfer all contracts, agreements, and relationships to the Acquirer and must make best efforts to assign, subcontract, or otherwise transfer contracts or agreements that require the consent of another party before assignment, subcontracting or other transfer. Straddle Contracts, which are defined in Paragraph II(P) as customer waste or recycling contracts that include a combination of services and/or collection stops included in the Divestiture Assets and services and/or collection stops not included in the Divestiture Assets, and that make up a small portion of the divestiture package, are required under Paragraph IV(L) to be divested at the option of the Acquirer so that the Acquirer will have the option to acquire the customer contracts which it determines it can efficiently and profitably serve.

The hauling facilities listed in Appendix C are not part of the Divestiture Assets because the Acquirer will acquire other hauling locations from which it can competitively run the acquired Routes in those areas. In certain markets, the Divestiture Assets include not only SCCW collection and MSW disposal assets, but also other collection assets including Roll-Off, Residential, and Recycling assets, which should enhance the viability of the Divestiture Assets.

The proposed Final Judgment contains several provisions to facilitate the transition of the Divestiture Assets to the Acquirer. First, Paragraph IV(N) of the proposed Final Judgment requires Defendants, at the Acquirer's option, to enter into a transition services agreement for back office, human resources, accounting, employee health and safety, and information technology services and support for the Divestiture Assets for a period of up to six months. The paragraph further provides that the United States, in its sole discretion, may approve one or more extensions of this transition services agreement for a total of up to an additional six months.

Second, Paragraph IV(O) of the proposed Final Judgment requires Defendants, at the Acquirer's option, to enter into a contract to provide rights to landfill disposal at ADS's Orchard Hill's landfill for a period of up to three years. The paragraph further provides that the United States, in its sole discretion, may approve one or more extensions of the agreement for a total of up to two additional years. The proposed Final Judgment also requires Defendants to operate gates, side houses, and disposal areas for the benefit of the Acquirer under terms and conditions that are no less favorable than those provided to WMI's own vehicles. This provision is intended to give the Acquirer an efficient outlet for the waste that it will receive at the West Elburn Transfer Station as it establishes itself in the market.

The proposed Final Judgment also contains provisions intended to facilitate the Acquirer's efforts to hire certain employees. Paragraph IV(I) of the proposed Final Judgment requires Defendants to provide the Acquirer, the United States, and the Plaintiff States with organization charts and information relating to certain employees and to make them available for interviews. It also provides that Defendants must not interfere with any negotiations by the Acquirer to hire these employees. In addition, for employees who elect employment with the Acquirer, Defendants must waive all non-compete and non-disclosure agreements, vest all unvested pension and other equity rights, provide any pay pro-rata, provide all other compensation and benefits that those employees have fully or partially accrued, and provide all other benefits that those employees otherwise would have been provided had those employees continued employment with Defendants, including but not limited to any retention bonuses or payments. This paragraph further provides that the Defendants may not solicit to hire any employees who elect employment with the Acquirer, unless that individual is terminated or laid off by the Acquirer or the Acquirer agrees in writing that the Defendants may solicit or hire that individual. The non-solicitation period runs for 12 months from the date of the divestiture.

If the Defendants do not accomplish the divestiture within the period prescribed in Section IV of the proposed Final Judgment, Section V of the proposed Final Judgment provides that the Court will appoint a divestiture trustee selected by the United States to effect the divestiture. If a divestiture trustee is appointed, the proposed Final Judgment provides that the Defendants will pay all costs and expenses of the trustee. The divestiture trustee's commission will be structured so as to provide an incentive for the trustee based on the price obtained and the speed with which the divestiture is accomplished. After the divestiture trustee's appointment becomes effective, the trustee will provide monthly reports to the Plaintiffs setting forth his or her efforts to accomplish the divestiture. At the end of six months, if the divestiture has not been accomplished, the United States may make recommendations to the Court, which may enter such orders as appropriate, in order to carry out the purpose of the Final Judgment, including by extending the trust or the term of the divestiture trustee's appointment.

Section XI of the proposed Final Judgment requires WMI to notify the United States and any Plaintiff State in which any of the assets or interests are located in advance of acquiring, directly or indirectly (including by asset swap), in a transaction that would not otherwise be reportable under the Hart-Scott-Rodino Antitrust Improvements Act of 1976, as amended, 15 U.S.C. 18a (the ''HSR Act''), any interest in any business engaged in waste collection or disposal in a market where the Complaint alleged a violation, which are listed in Appendix D. The proposed Final Judgment further provides for waiting periods and opportunities for the United States to obtain additional information analogous to the provisions of the HSR Act. The notification requirement applies when the acquired business's annual revenues from the relevant service in the market exceeded $500,000 for the 12 months preceding the proposed acquisition. Because many of the markets alleged in the Complaint are highly concentrated, it is important for the Division and Plaintiff States to receive notice of even small transactions that have the potential to reduce competition in these markets. Requiring notification of any such acquisition will permit the United States to assess the competitive effects of that acquisition before it is consummated and, if necessary, seek to enjoin the transaction.

The proposed Final Judgment also contains provisions designed to promote compliance and make enforcement of the Final Judgment as effective as possible. Paragraph XIV(A) provides that the United States retains and reserves all rights to enforce the Final Judgment, including the right to seek an order of contempt from the Court. Under the terms of this paragraph, Defendants have agreed that in any civil contempt action, any motion to show cause, or any similar action brought by the United States regarding an alleged violation of the Final Judgment, the United States may establish the violation and the appropriateness of any remedy by a preponderance of the evidence and that the Defendants have waived any argument that a different standard of proof should apply. This provision aligns the standard for compliance with the Final Judgment with the standard of proof that applies to the underlying offense that the Final Judgment addresses.

Paragraph XIV(B) provides additional clarification regarding the interpretation of the provisions of the proposed Final Judgment. The proposed Final Judgment is intended to restore competition the United States and Plaintiff States allege would otherwise be harmed by the transaction. The Defendants agree that they will abide by the proposed Final Judgment, and that they may be held in contempt of this Court for failing to comply with any provision of the proposed Final Judgment that is stated specifically and in reasonable detail, as interpreted in light of this procompetitive purpose.

Paragraph XIV(C) of the proposed Final Judgment provides that if the Court finds in an enforcement proceeding that a Defendant has violated the Final Judgment, the United States may apply to the Court for a one-time extension of the Final Judgment, together with such other relief as may be appropriate. In addition, to compensate American taxpayers for any costs associated with investigating and enforcing violations of the Final Judgment, Paragraph XIV(C) provides that in any successful effort by the United States to enforce the Final Judgment against a Defendant, whether litigated or resolved before litigation, that Defendant will reimburse the United States for attorneys' fees, experts' fees, and other costs incurred in connection with any effort to enforce the Final Judgment, including the investigation of the potential violation.

Paragraph XIV(D) states that the United States may file an action against a Defendant for violating the Final Judgment for up to four years after the Final Judgment has expired or been terminated. This provision is meant to address circumstances such as when evidence that a violation of the Final Judgment occurred during the term of the Final Judgment is not discovered until after the Final Judgment has expired or been terminated or when there is not sufficient time for the United States to complete an investigation of an alleged violation until after the Final Judgment has expired or been terminated. This provision, therefore, makes clear that, for four years after the Final Judgment has expired or been terminated, the United States may still challenge a violation that occurred during the term of the Final Judgment.

Finally, Section XV of the proposed Final Judgment provides that the Final Judgment will expire ten years from the date of its entry, except that after five years from the date of its entry, the Final Judgment may be terminated upon notice by the United States to the Court and the Defendants that the divestiture has been completed and that continuation of the Final Judgment is no longer necessary or in the public interest.

IV. Remedies Available to Potential Private Litigants

Section 4 of the Clayton Act, 15 U.S.C. 15, provides that any person who has been injured as a result of conduct prohibited by the antitrust laws may bring suit in federal court to recover three times the damages the person has suffered, as well as costs and reasonable attorneys' fees. Entry of the proposed Final Judgment neither impairs nor assists the bringing of any private antitrust damage action. Under the provisions of Section 5(a) of the Clayton Act, 15 U.S.C. 16(a), the proposed Final Judgment has no prima facie effect in any subsequent private lawsuit that may be brought against Defendants.

V. Procedures Available for Modification of the Proposed Final Judgment

The United States and Defendants have stipulated that the proposed Final Judgment may be entered by the Court after compliance with the provisions of the APPA, provided that the United States has not withdrawn its consent. The APPA conditions entry upon the Court's determination that the proposed Final Judgment is in the public interest.

The APPA provides a period of at least 60 days preceding the effective date of the proposed Final Judgment within which any person may submit to the United States written comments regarding the proposed Final Judgment. Any person who wishes to comment should do so within 60 days of the date

of publication of this Competitive Impact Statement in the **Federal Register**, or the last date of publication in a newspaper of the summary of this Competitive Impact Statement, whichever is later. All comments received during this period will be considered by the U.S. Department of Justice, which remains free to withdraw its consent to the proposed Final Judgment at any time before the Court's entry of the Final Judgment. The comments and the response of the United States will be filed with the Court. In addition, comments will be posted on the U.S. Department of Justice, Antitrust Division's internet website and, under certain circumstances, published in the **Federal Register**.

Written comments should be submitted to: Katrina Rouse, Chief, Defense, Industrials, and Aerospace Section, Antitrust Division, U.S. Department of Justice, 450 Fifth Street NW, Suite 8700, Washington, DC 20530.

The proposed Final Judgment provides that the Court retains jurisdiction over this action, and the parties may apply to the Court for any order necessary or appropriate for the modification, interpretation, or enforcement of the Final Judgment.

VI. Alternatives to the Proposed Final Judgment

As an alternative to the proposed Final Judgment, the United States considered a full trial on the merits against Defendants. The United States could have continued the litigation and sought preliminary and permanent injunctions against WMI's acquisition of ADS. The United States is satisfied, however, that the divestiture of assets described in the proposed Final Judgment will remedy the anticompetitive effects alleged in the Complaint, preserving competition for the provision of SCCW collection and MSW disposal in each of the geographic markets alleged in the Complaint. Thus, the proposed Final Judgment achieves all or substantially all of the relief the United States would have obtained through litigation, but avoids the time, expense, and uncertainty of a full trial on the merits of the Complaint.

VII. Standard of Review Under the APPA for the Proposed Final Judgment

The Clayton Act, as amended by the APPA, requires that proposed consent judgments in antitrust cases brought by the United States be subject to a 60-day comment period, after which the Court shall determine whether entry of the proposed Final Judgment ''is in the public interest.'' 15 U.S.C. 16(e)(1). In making that determination, the Court, in accordance with the statute as amended in 2004, is required to consider:

> (A) The competitive impact of such judgment, including termination of alleged violations, provisions for enforcement and modification, duration of relief sought, anticipated effects of alternative remedies actually considered, whether its terms are ambiguous, and any other competitive considerations bearing upon the adequacy of such judgment that the court deems necessary to a determination of whether the consent judgment is in the public interest; and
>
> (B) the impact of entry of such judgment upon competition in the relevant market or markets, upon the public generally and individuals alleging specific injury from the violations set forth in the complaint including consideration of the public benefit, if any, to be derived from a determination of the issues at trial.

15 U.S.C. 16(e)(1)(A) & (B). In considering these statutory factors, the Court's inquiry is necessarily a limited one as the government is entitled to ''broad discretion to settle with the defendant within the reaches of the public interest.'' *United States* v. *Microsoft Corp.,* 56 F.3d 1448, 1461 (D.C. Cir. 1995); *United States* v. *U.S. Airways Grp., Inc.,* 38 F. Supp. 3d 69, 75 (D.D.C. 2014) (explaining that the ''court's inquiry is limited'' in Tunney Act settlements); *United States* v. *InBev N.V./S.A.,* No. 08–1965 (JR), 2009 U.S. Dist. LEXIS 84787, at *3 (D.D.C. Aug. 11, 2009) (noting that a court's review of a consent judgment is limited and only inquires ''into whether the government's determination that the proposed remedies will cure the antitrust violations alleged in the complaint was reasonable, and whether the mechanism to enforce the final judgment are clear and manageable'').

As the U.S. Court of Appeals for the District of Columbia Circuit has held, under the APPA a court considers, among other things, the relationship between the remedy secured and the specific allegations in the government's complaint, whether the proposed Final Judgment is sufficiently clear, whether its enforcement mechanisms are sufficient, and whether it may positively harm third parties. *See Microsoft,* 56 F.3d at 1458–62. With respect to the adequacy of the relief secured by the proposed Final Judgment, a court may not ''make de novo determination of facts and issues.'' *United States* v. *W. Elec. Co.,* 993 F.2d 1572, 1577 (D.C. Cir. 1993) (quotation marks omitted); *see also Microsoft,* 56 F.3d at 1460–62; *United States* v. *Alcoa, Inc.,* 152 F. Supp. 2d 37, 40 (D.D.C. 2001); *United States* v. *Enova Corp.,* 107 F. Supp. 2d 10, 16 (D.D.C. 2000); *InBev,* 2009 U.S. Dist. LEXIS 84787, at *3. Instead, ''[t]he balancing of competing social and political interests affected by a proposed antitrust consent decree must be left, in the first instance, to the discretion of the Attorney General.'' *W. Elec. Co.,* 993 F.2d at 1577 (quotation marks omitted). ''The court should bear in mind the *flexibility* of the public interest inquiry: The court's function is not to determine whether the resulting array of rights and liabilities is one that will *best* serve society, but only to confirm that the resulting settlement is within the *reaches* of the public interest.'' *Microsoft,* 56 F.3d at 1460 (quotation marks omitted); *see also United States* v. *Deutsche Telekom AG,* No. 19–2232 (TJK), 2020 WL 1873555, at *7 (D.D.C. Apr. 14, 2020). More demanding requirements would ''have enormous practical consequences for the government's ability to negotiate future settlements,'' contrary to congressional intent. *Id.* at 1456. ''The Tunney Act was not intended to create a disincentive to the use of the consent decree.'' *Id.*

The United States' predictions about the efficacy of the remedy are to be afforded deference by the Court. *See, e.g., Microsoft,* 56 F.3d at 1461 (recognizing courts should give ''due respect to the Justice Department's . . . view of the nature of its case''); *United States* v. *Iron Mountain, Inc.,* 217 F. Supp. 3d 146, 152–53 (D.D.C. 2016) (''In evaluating objections to settlement agreements under the Tunney Act, a court must be mindful that [t]he government need not prove that the settlements will perfectly remedy the alleged antitrust harms[;] it need only provide a factual basis for concluding that the settlements are reasonably adequate remedies for the alleged harms.'') (internal citations omitted); *United States* v. *Republic Servs., Inc.,* 723 F. Supp. 2d 157, 160 (D.D.C. 2010) (noting ''the deferential review to which the government's proposed remedy is accorded''); *United States* v. *Archer-Daniels-Midland Co.,* 272 F. Supp. 2d 1, 6 (D.D.C. 2003) (''A district court must accord due respect to the government's prediction as to the effect of proposed remedies, its perception of the market structure, and its view of the nature of the case.''). The ultimate question is whether ''the remedies [obtained by the Final Judgment are] so inconsonant with the allegations charged as to fall outside of the 'reaches of the public interest.''' *Microsoft,* 56 F.3d at 1461 (*quoting W. Elec. Co.,* 900 F.2d at 309).

Moreover, the Court's role under the APPA is limited to reviewing the remedy in relationship to the violations that the United States has alleged in its

complaint, and does not authorize the Court to ''construct [its] own hypothetical case and then evaluate the decree against that case.'' *Microsoft,* 56 F.3d at 1459; *see also U.S. Airways,* 38 F. Supp. 3d at 75 (noting that the court must simply determine whether there is a factual foundation for the government's decisions such that its conclusions regarding the proposed settlements are reasonable); *InBev,* 2009 U.S. Dist. LEXIS 84787, at *20 (''[T]he 'public interest' is not to be measured by comparing the violations alleged in the complaint against those the court believes could have, or even should have, been alleged''). Because the ''court's authority to review the decree depends entirely on the government's exercising its prosecutorial discretion by bringing a case in the first place,'' it follows that ''the court is only authorized to review the decree itself,'' and not to ''effectively redraft the complaint'' to inquire into other matters that the United States did not pursue. *Microsoft,* 56 F.3d at 1459–60.

In its 2004 amendments to the APPA, Congress made clear its intent to preserve the practical benefits of using consent judgments proposed by the United States in antitrust enforcement, Public Law 108–237 § 221, and added the unambiguous instruction that ''[n]othing in this section shall be construed to require the court to conduct an evidentiary hearing or to require the court to permit anyone to intervene.'' 15 U.S.C. 16(e)(2); *see also U.S. Airways,* 38 F. Supp. 3d at 76 (indicating that a court is not required to hold an evidentiary hearing or to permit intervenors as part of its review under the Tunney Act). This language explicitly wrote into the statute what Congress intended when it first enacted the Tunney Act in 1974. As Senator Tunney explained: ''[t]he court is nowhere compelled to go to trial or to engage in extended proceedings which might have the effect of vitiating the benefits of prompt and less costly settlement through the consent decree process.'' 119 Cong. Rec. 24,598 (1973) (statement of Sen. Tunney). ''A court can make its public interest determination based on the competitive impact statement and response to public comments alone.'' *U.S. Airways,* 38 F. Supp. 3d at 76 (citing *Enova Corp.,* 107 F. Supp. 2d at 17).

VIII. Determinative Documents

There are no determinative materials or documents within the meaning of the APPA that were considered by the United States in formulating the proposed Final Judgment.

Dated: October 23, 2020.

Respectfully submitted,

Jeremy W. Cline, (D.C. Bar #1011073), *U.S. Department of Justice, Antitrust Division, Defense, Industrials, and Aerospace Section, 450 Fifth Street NW, Suite 8700, Washington, DC 20530, (202) 598–2294, jeremy.cline@usdoj.gov.*

Appendix A: SCCW Geographic Markets and Number of Significant Competitors Pre-Merger

SMALL CONTAINER COMMERCIAL WASTE

Geographic market	Counties/municipalities within geographic market	Number of significant competitors pre-merger
1. Lee County, Alabama	Lee County, AL	3
2. Macon County, Alabama	Macon County, AL	2
3. Mobile, Alabama	City of Mobile, AL	3
4. Montgomery County, Alabama	Montgomery County, AL	3
5. Tuscaloosa, Alabama	City of Tuscaloosa, AL	3
6. Jacksonville, Florida	Duvall, St. Johns, and Clay Counties, FL	3
7. Ocala, Florida	Marion and Citrus Counties, FL	3
8. Augusta, Georgia	Columbia and Richmond Counties, GA and Edgefield and Aiken Counties, SC.	4
9. Rochester, Minnesota	City of Rochester, MN	3
10. St. Cloud, Minnesota	City of St. Cloud, MN	3
11. Calumet County, Wisconsin	Calumet County, WI	2
12. Clark, Wisconsin	Clark and Taylor Counties, WI	3
13. Dane County, Wisconsin	Dane County, WI	3
14. Fond du Lac and Sheboygan, Wisconsin	Dodge, Fond du Lac, Ozaukee, Sheboygan, and Washington Counties, WI.	2
15. Green Bay, Wisconsin	Brown and Outagamie Counties, WI	4
16. Green County, Wisconsin	Green County, WI	3
17. Green Lake, Wisconsin	Columbia, Green Lake, and Marquette Counties, WI	2
18. Eau Claire, Wisconsin	Chippewa and Eau Claire Counties, WI	4
19. Jackson County, Wisconsin	Jackson County, WI	3
20. Jefferson County, Wisconsin	Jefferson County, WI	3
21. Kenosha County, Wisconsin	Kenosha County, WI	2
22. Kewaunee County, Wisconsin	Kewaunee County, WI	2
23. Langlade, Wisconsin	Langlade, Lincoln, Oneida, and Shawano Counties, WI	2
24. Manitowoc County, Wisconsin	Manitowoc County, WI	3
25. Mar-Oco, Wisconsin	Marinette and Oconto Counties, WI	3
26. Marathon, Wisconsin	Marathon, Portage, and Wood Counties, WI	3
27. Milwaukee, Wisconsin	Milwaukee, Racine, and Waukesha Counties, WI	2
28. Price County, Wisconsin	Price County, WI	3
29. Rock County, Wisconsin	Rock County, WI	3
30. Sauk County, Wisconsin	Sauk County, WI	3
31. Walworth County, Wisconsin	Walworth County, WI	3
32. Waupaca, Wisconsin	Waupaca County, WI	4
33. Waushara, Wisconsin	Waushara and Winnebago Counties, WI	2

Appendix B: MSW Disposal Geographic Markets and Number of Significant Competitors Pre-Merger

MSW DISPOSAL

Geographic market	Counties/municipalities within geographic market	Number of significant competitors pre-merger
1. East Central, Alabama	Lee and Macon Counties, AL	2
2. Mobile, Alabama	City of Mobile, AL	3
3. Phenix City, Alabama	Phenix City, AL	2
4. Ocala, Florida	Marion and Citrus Counties, FL	3
5. Atlanta, Georgia	Cherokee, Forsyth, Gwinnett, Fulton, Clayton, and Cobb Counties, GA.	3
6. Kane County, Illinois	Kane County, IL	3
7. Lake County, Illinois	Lake County, IL	3
8. Northern Cook County, Illinois	Area west of Interstate 94 and north of Interstate 90 in Cook County, Illinois.	4
9. Fort Wayne, Indiana	Allen, Kosciusko, and Whitley Counties, IN	3
10. Detroit, Michigan	Wayne, Macomb and Oakland Counties, MI	4
11. Bedford County, Pennsylvania	Bedford County, PA	2
12. Fayette County, Pennsylvania	Fayette and Greene Counties, PA	4
13. Indiana County, Pennsylvania	Clarion, Jefferson, and Indiana Counties, PA	3
14. Somerset County, Pennsylvania	Cambria and Somerset Counties, PA	2
15. State College, Pennsylvania	Centre and Clearfield Counties, PA	3
16. Dane County, Wisconsin	Dane County, WI	3
17. Eau Claire, Wisconsin	Chippewa and Eau Claire Counties, WI	2
18. Fond du Lac and Sheboygan, Wisconsin	Dodge, Fond du Lac, Ozaukee, Sheboygan, and Washington Counties, WI.	2
19. Greater Green Bay, Appleton, Oshkosh, Wisconsin	Brown, Outagamie, and Winnebago Counties, WI	2
20. Greater Manitowoc, Wisconsin	Calumet, Kewaunee, and Manitowoc Counties, WI	2
21. Green County, Wisconsin	Green County, WI	3
22. Janesville, Wisconsin	Jefferson, Rock, and Walworth Counties, WI	3
23. Milwaukee, Wisconsin	Milwaukee, Racine, and Waukesha Counties, WI	2
24. St. Croix, Wisconsin	Pierce and St. Croix Counties, WI	3

Appendix C: List of Retained Hauling Facilities

III. Florida

a. WMI's hauling facility located at 8708 NE 44th Drive, Wildwood, Florida 34785;

b. WMI's hauling facility located at 6501 Greenland Road, Jacksonville, Florida 32258.

IV. Wisconsin

a. ADS's hauling facility located at 2301 W B R Townline Road, Beloit, Wisconsin 53511;

b. WMI's hauling facility located at 301 Thomas Street, Fond du Lac, Wisconsin 54935;

c. ADS's hauling facility located at 2626 Mondovi Road, Eau Claire, Wisconsin 54701;

d. ADS's hauling facility located at 559 Progress Drive, Hartland, Wisconsin 53029.

V. Illinois

a. ADS's hauling facility located at 2230 Ernie Krueger Circle, Waukegan, Illinois 60087.

VI. Georgia

a. ADS's hauling facility located at 5734 Columbia Road, Grovetown, GA 30813.

Appendix D: Areas for Which the Notice Provision in Paragraph XI(A) of the Proposed Final Judgment Applies

Geographic market	Counties/municipalities within geographic market	Relevant service
East Central, Alabama	Lee and Macon Counties, AL	MSW Disposal.
Lee County, Alabama	Lee County, AL	SCCW Collection.
Macon County, Alabama	Macon County, AL	SCCW Collection.
Mobile, Alabama	City of Mobile, AL	SCCW Collection and MSW Disposal.
Montgomery County, Alabama	Montgomery County, AL	SCCW Collection.
Phenix City, Alabama	Phenix City, AL	MSW Disposal.
Tuscaloosa, Alabama	City of Tuscaloosa, AL	SCCW Collection.
Jacksonville, Florida	Duvall, St. Johns, and Clay Counties, FL	SCCW Collection.
Ocala, Florida	Marion and Citrus Counties, FL	SCCW Collection and MSW Disposal.
Atlanta, Georgia	Cherokee, Forsyth, Gwinnett, Fulton, Clayton, and Cobb Counties, GA.	MSW Disposal.
Augusta, Georgia	Columbia and Richmond Counties, GA and Edgefield and Aiken Counties, SC.	SCCW Collection.
Kane County, Illinois	Kane County, IL	MSW Disposal.
Lake County, Illinois	Lake County, IL	MSW Disposal.
Northern Cook County, Illinois	Area west of Interstate 94 and north of Interstate 90 in Cook County, Illinois.	MSW Disposal.
Fort Wayne, Indiana	Allen, Kosciusko, and Whitley Counties, IN	MSW Disposal.

Geographic market	Counties/municipalities within geographic market	Relevant service
Detroit, Michigan	Wayne, Macomb and Oakland Counties, MI	MSW Disposal.
Rochester, Minnesota	City of Rochester, MN	SCCW Collection.
St. Cloud, Minnesota	City of St. Cloud, MN	SCCW Collection.
State College, Pennsylvania	Centre and Clearfield Counties, PA	MSW Disposal.
Indiana County, Pennsylvania	Clarion, Jefferson, and Indiana Counties, PA	MSW Disposal.
Fayette County, Pennsylvania	Fayette and Greene Counties, PA	MSW Disposal.
Somerset County, Pennsylvania	Cambria and Somerset Counties, PA	MSW Disposal.
Bedford County, Pennsylvania	Bedford County, PA	MSW Disposal.
Greater Green Bay, Appleton, Oshkosh, Wisconsin	Brown, Outagamie, and Winnebago Counties, WI	MSW Disposal.
Calumet County, Wisconsin	Calumet County, WI	SCCW Collection.
Clark, Wisconsin	Clark and Taylor Counties, WI	SCCW Collection.
Dane County, Wisconsin	Dane County, WI	SCCW Collection and MSW Disposal.
Eau Claire, Wisconsin	Chippewa and Eau Claire Counties, WI	SCCW Collection and MSW Disposal.
Fond du Lac and Sheboygan, Wisconsin	Dodge, Fond du Lac, Ozaukee, Sheboygan, and Washington Counties, WI.	SCCW Collection and MSW Disposal.
Greater Manitowoc, Wisconsin	Calumet, Kewaunee, and Manitowoc Counties, WI	MSW Disposal.
Green Bay, Wisconsin	Brown and Outagamie Counties, WI	SCCW Collection.
Green County, Wisconsin	Green County, WI	SCCW Collection and MSW Disposal.
Green Lake, Wisconsin	Columbia, Green Lake, and Marquette Counties, WI	SCCW Collection.
Jackson County, Wisconsin	Jackson County, WI	SCCW Collection.
Janesville, Wisconsin	Jefferson, Rock, and Walworth Counties, WI	MSW Disposal.
Jefferson County, Wisconsin	Jefferson County, WI	SCCW Collection.
Kenosha County, Wisconsin	Kenosha County, WI	SCCW Collection.
Kewaunee County, Wisconsin	Kewaunee County, WI	SCCW Collection.
Langlade, Wisconsin	Langlade, Lincoln, Oneida, and Shawano Counties, WI	SCCW Collection.
Manitowoc County, Wisconsin	Manitowoc County, WI	SCCW Collection.
Mar-Oco, Wisconsin	Marinette and Oconto Counties, WI	SCCW Collection.
Marathon, Wisconsin	Marathon, Portage, and Wood Counties, WI	SCCW Collection.
Milwaukee, Wisconsin	Milwaukee, Racine, and Waukesha Counties, WI	SCCW Collection and MSW Disposal.
Price County, Wisconsin	Price County, WI	SCCW Collection.
Rock County, Wisconsin	Rock County, WI	SCCW Collection.
Sauk County, Wisconsin	Sauk County, WI	SCCW Collection.
St. Croix, Wisconsin	Pierce and St. Croix Counties, WI	MSW Disposal.
Walworth County, Wisconsin	Walworth County, WI	SCCW Collection.
Waupaca, Wisconsin	Waupaca County, WI	SCCW Collection.
Waushara, Wisconsin	Waushara and Winnebago Counties, WI	SCCW Collection.

[FR Doc. 2020–24221 Filed 11–2–20; 8:45 am]

BILLING CODE 4410–11–P

Reader Aids

Federal Register

Vol. 85, No. 213

Tuesday, November 3, 2020

CUSTOMER SERVICE AND INFORMATION

Federal Register/Code of Federal Regulations	
General Information, indexes and other finding aids	**202–741–6000**
Laws	**741–6000**
Presidential Documents	
Executive orders and proclamations	**741–6000**
The United States Government Manual	**741–6000**
Other Services	
Electronic and on-line services (voice)	**741–6020**
Privacy Act Compilation	**741–6050**

ELECTRONIC RESEARCH

World Wide Web

Full text of the daily Federal Register, CFR and other publications is located at: **www.govinfo.gov.**

Federal Register information and research tools, including Public Inspection List and electronic text are located at: **www.federalregister.gov.**

E-mail

FEDREGTOC (Daily Federal Register Table of Contents Electronic Mailing List) is an open e-mail service that provides subscribers with a digital form of the Federal Register Table of Contents. The digital form of the Federal Register Table of Contents includes HTML and PDF links to the full text of each document.

To join or leave, go to **https://public.govdelivery.com/accounts/USGPOOFR/subscriber/new**, enter your email address, then follow the instructions to join, leave, or manage your subscription.

PENS (Public Law Electronic Notification Service) is an e-mail service that notifies subscribers of recently enacted laws.

To subscribe, go to **http://listserv.gsa.gov/archives/publaws-l.html and select** *Join or leave the list (or change settings);* then follow the instructions.

FEDREGTOC and **PENS** are mailing lists only. We cannot respond to specific inquiries.

Reference questions. Send questions and comments about the Federal Register system to: **fedreg.info@nara.gov**

The Federal Register staff cannot interpret specific documents or regulations.

FEDERAL REGISTER PAGES AND DATE, NOVEMBER

69119–69464 2
69465–70026 3

CFR PARTS AFFECTED DURING NOVEMBER

At the end of each month the Office of the Federal Register publishes separately a List of CFR Sections Affected (LSA), which lists parts and sections affected by documents published since the revision date of each title.

3 CFR

Administrative Orders:
Notices:
Notice of October 30, 2020 69463

8 CFR

1001 69465
1003 69465
1292 69465
Proposed Rules:
214 69236

12 CFR

1003 69119
Ch. X 69482

13 CFR

124 69120
125 69120
129 69120

14 CFR

39 .....69126, 69129, 69131, 69134, 69138, 69140, 69142, 69144, 69485, 69488, 69492, 69493, 69496
71 .....69147, 69148
97 .....69149, 69151
Proposed Rules:
27 69265
39 .....69267, 69269, 69272, 69276, 69519, 69522
71 .....69279, 69281

17 CFR

23 69498
232 69499

21 CFR

1301 69153
1306 69153
Proposed Rules:
1300 69282
1301 69282

26 CFR

1 69500

28 CFR

0 69465

29 CFR

1695 69167

33 CFR

165 69172
Proposed Rules:
165 .....69299, 69301

36 CFR

1 69175
4 69175
Proposed Rules:
222 69303

37 CFR

6 69501

40 CFR

9 69189
52 69504
63 69508
122 69189
123 69189
127 69189
180 69512
403 69189
503 69189
Proposed Rules:
152 69307

42 CFR

Proposed Rules:
600 69525

43 CFR

8340 69206

47 CFR

2 69515
90 69515
97 69515
Proposed Rules:
73 69311

49 CFR

299 69700
572 69898
Proposed Rules:
571 69388

50 CFR

17 69778
27 69223
216 69515
679 69517
Proposed Rules:
17 69540

LIST OF PUBLIC LAWS

This is a continuing list of public bills from the current session of Congress which have become Federal laws. This list is also available online at *https://www.archives.gov/federal-register/laws*.

The text of laws is not published in the **Federal Register** but may be ordered in ''slip law'' (individual pamphlet) form from the Superintendent of Documents, U.S. Government Publishing Office, Washington, DC 20402 (phone, 202–512–1808). The text will also be made available at *https://www.govinfo.gov*. Some laws may not yet be available.

H.R. 561/P.L. 116–183
Protecting Business Opportunities for Veterans Act of 2019 (Oct. 30, 2020; 134 Stat. 895)

H.R. 1952/P.L. 116–184
Intercounty Adoption Information Act of 2019 (Oct. 30, 2020; 134 Stat. 897)

H.R. 2359/P.L. 116–185
Whole Veteran Act (Oct. 30, 2020; 134 Stat. 899)

H.R. 3399/P.L. 116–186
To amend the Nutria Eradication and Control Act of 2003 to include California in the program, and for other purposes. (Oct. 30, 2020; 134 Stat. 901)

H.R. 4183/P.L. 116–187
Identifying Barriers and Best Practices Study Act (Oct. 30, 2020; 134 Stat. 903)

S. 3051/P.L. 116–188
America's Conservation Enhancement Act (Oct. 30, 2020; 134 Stat. 905)

S. 2330/P.L. 116–189
Empowering Olympic, Paralympic, and Amateur Athletes Act of 2020 (Oct. 30, 2020; 134 Stat. 943)

S. 2638/P.L. 116–190
Friendly Airports for Mothers Improvement Act (Oct. 30, 2020; 134 Stat. 974)

S. 3758/P.L. 116–191
To amend the Klamath Basin Water Supply Enhancement Act of 2000 to make certain technical corrections. (Oct. 30, 2020; 134 Stat. 976)

S. 4075/P.L. 116–192
Reinvigorating Lending for the Future Act (Oct. 30, 2020; 134 Stat. 978)

S. 4762/P.L. 116–193
To designate the airport traffic control tower located at Piedmont Triad International Airport in Greensboro, North Carolina, as the ''Senator Kay Hagan Airport Traffic Control Tower''. (Oct. 30, 2020; 134 Stat. 980)

Last List October 26, 2020

Public Laws Electronic Notification Service (PENS)

PENS is a free email notification service of newly enacted public laws. To subscribe, go to *https://listserv.gsa.gov/cgi-bin/wa.exe?SUBED1=PUBLAWS-L&A=1*

Note: This service is strictly for email notification of new laws. The text of laws is not available through this service. **PENS** cannot respond to specific inquiries sent to this address.