DEPARTMENT OF TRANSPORTATION

Federal Railroad Administration

49 CFR Part 299

[Docket No. FRA–2019–0068, Notice 5]

RIN 2130–AC84

Texas Central Railroad High-Speed Rail Safety Standards

AGENCY: Federal Railroad Administration (FRA), Department of Transportation (DOT).

ACTION: Final rule; rule of particular applicability and record of decision.

SUMMARY: This final rule of particular applicability (RPA) establishes safety standards for the Texas Central Railroad (TCRR or the railroad) high-speed rail (HSR) system. These standards are not intended for general application in the railroad industry, but apply only to the TCRR system planned for development in the State of Texas. This rule takes a systems approach to safety, and so includes standards that address the aspects of the TCRR HSR system consistent with the regulatory framework for the general system, but in a manner appropriate to TCRR's technology and application, including signal and trainset control, track, rolling stock, operating practices, system qualifications, and maintenance. The TCRR HSR system is planned to operate from Houston to Dallas, on dedicated track, with no grade crossings, at speeds not to exceed 330 km/h (205 mph). The TCRR rolling stock, track, and core systems will replicate the Tokaido Shinkansen HSR system operated by the Central Japan Railway Company (JRC), and will be used exclusively for revenue passenger service.

DATES: *Effective date.* This final rule is effective December 3, 2020.

Incorporation by reference. The incorporation by reference of the standards listed in the rule is approved by the Director of the Federal Register as of December 3, 2020.

ADDRESSES: *Docket:* For access to the docket to read background documents or comments received, go to *http://www.regulations.gov* at any time.

FOR FURTHER INFORMATION CONTACT: For issues related to the technical safety requirements: Frederick Mottley, Systems Engineer, at (617) 494–3160; Devin Rouse, Mechanical Engineer, at (202) 493–6185; or Michael Hunter, Attorney Adviser, at (202) 493–0368. For issues related to the Record of Decision: Kevin Wright, Environmental Protection Specialist at (202) 493–0845; or Kathryn Johnson, Attorney Adviser, at (202) 493–0407.

SUPPLEMENTARY INFORMATION:

Table of Contents

I. Executive Summary
II. Statutory Authority
III. Proceedings to Date
IV. Discussion of Comments Received on the NPRM
A. Context and Overview
B. Regulatory Approach
C. General Safety Oversight
D. Interference With the Union Pacific Railroad
E. Track Safety
F. Crashworthiness and Occupant Protection
G. Reissuance of NPRM
H. Electrical Arcing From the Overhead Catenary System
I. Right-of-Way Barrier Protection
J. Emergency Response
K. Noise Emission and Vibration
L. Eminent Domain
M. Regulatory Evaluation
N. Enforcement
V. Discussion of Final Rule and Regulatory Changes
A. Non-Substantive Corrections
B. Evaluation of Substantive Changes
1. § 299.5 Definitions
2. Subpart B—Signal and Trainset Control System
3. § 299.345 Visual Inspections; Right-of-Way
4. § 299.347 Special Inspections
5. § 299.713 Program Approval Procedures
C. Trainset Image Recording System
D. Decision Under 49 U.S.C. 20306, Exemption for Technological Improvements
E. Incorporation by Reference
VI. FRA's Record of Decision
A. Summary of Alternatives Considered
1. No Build Alternative
2. Build Alternatives
B. Environmentally Preferable Alternative
1. Environmentally Preferable Build Alternative
2. Environmentally Preferable Houston Station Option
C. Mitigation Commitments
VII. Regulatory Impact and Notices
A. Executive Orders 12866 and 13771, and DOT Regulatory Policies and Procedures
B. Regulatory Flexibility Act and Executive Order 13272; Regulatory Flexibility Assessment
C. Paperwork Reduction Act
D. Federalism Implications
E. International Trade Impact Assessment
F. National Environmental Policy Act
G. Executive Order 12898 (Environmental Justice)
H. Clean Air Act/Air Quality General Conformity
I. Section 106 of the National Historic Preservation Act
J. Department of Transportation Act Section 4(f) Determination
K. Endangered Species Act/Section 7 U.S. Fish and Wildlife Service Biological Opinion
L. Executive Order 11990 Preservation of the Nation's Wetlands (Executive Order 11990 & DOT Order 5660.1a)
M. Floodplain Management (Executive Order 11988 & DOT Order 5650.2)
N. Executive Order 13175 (Tribal Consultation)
O. Unfunded Mandates Reform Act of 1995
P. Energy Impact

I. Executive Summary

On August 30, 2019, FRA granted TCRR's rulemaking petition (petition), which was submitted April 16, 2016.[1] The petition proposed comprehensive safety requirements for the application of JRC's Tokaido Shinkansen technology, and its associated design and engineering principals. TCRR's petition represented that the regulatory requirements offered by TCRR translate the technological and operational aspects of the JRC Tokaido Shinkansen system in a manner that can be regulated under a framework similar to other US passenger rail operations while maintaining the integrity of the safety case developed by JRC over 50 years of experience operating high-speed trains.

The Tokaido Shinkansen system first went into service on October 1, 1964, under the operation of the Japanese National Railways (JNR). On April 1, 1987, JNR was privatized and split into six passenger railroads and a freight railroad. JRC took over operations of the Tokaido Shinkansen system in Central Japan, and is still operating the system today. In over 50 years of Tokaido Shinkansen system operations, JNR, and now JRC, have optimized operations to a very high level of safety and performance. The Tokaido Shinkansen system has moved over 6 billion passengers without a passenger fatality or injury due to trainset accidents such as a derailment or collision.

TCRR intends to implement a high-speed passenger rail system by using the Tokaido Shinkansen system's service-proven technology and by replicating JRC's operational and maintenance practices and procedures. TCRR plans to implement the latest, service-proven derivative of the N700 trainset and other core systems currently in use on the Tokaido Shinkansen line,[2] which have been refined for high-speed operations over the last 50+ years. TCRR plans to adapt the N700 series trainset and supporting systems in a manner suitable for the Texas environment and operate under a regulatory framework that

[1] TCRR supplemented its petition in August 2016, and submitted an updated petition in September 2017.

[2] Subsequent references to ''N700'' or ''N700 series trainset'' are meant to refer to the N700 series trainset currently in, or future variants approved for, use.

enables FRA to provide effective safety oversight.

FRA has evaluated the economic burden that the final rule would have on TCRR. Discussion of this can be found under section VII. A. Executive Orders 12866 and 13771, and DOT Regulatory Policies and Procedures. FRA concluded that because this final rule generally includes only voluntary actions, or alternative action that would be voluntary, the final rule does not impart additional burdens on TCRR.

Further, this document also contains FRA's Record of Decision with respect to the environmental review conducted pursuant to the National Environmental Policy Act (NEPA), as discussed in section VI. FRA's Record of Decision.

Except for the changes discussed under sections V. A. Non-substantive Corrections and V. B. Evaluation of Substantive Changes, FRA is adopting the rule text of the NPRM otherwise unchanged in this final rule.

II. Statutory Authority

Under the Federal railroad safety laws, FRA has jurisdiction over all railroads, as defined in 49 U.S.C. 20102, except urban rapid transit operations that are not connected to the general railroad system of transportation (general system). Moreover, FRA considers a standalone intercity railroad line to be part of the general system, even if it is not physically connected to other railroads (as FRA has previously stated with respect to the Alaska Railroad; 49 CFR part 209, appendix A). FRA considers the contemplated TCRR system as intercity passenger rail, not urban rapid transit. Accordingly, the TCRR system will be subject to FRA jurisdiction, whether it connects to the general system or not. Please see FRA's policy statement, contained at 49 CFR part 209, appendix A, discussing in greater detail FRA's jurisdiction over passenger railroads, which includes discussion on how FRA characterizes passenger operations.

FRA has a regulatory program in place, pursuant to its statutory authority, to address equipment, track, operating practices, and human factors in the existing, conventional railroad environment. However, significant operational and equipment differences exist between TCRR's system and existing passenger operations in the United States. In many of the railroad safety disciplines, FRA's existing regulations do not address the safety concerns and operational peculiarities of the TCRR system. Therefore, to allow TCRR to operate as envisioned, an alternative regulatory approach is required to provide safety oversight.

III. Proceedings to Date

On March 10, 2020, FRA published a notice of proposed rulemaking (NPRM).[3] The NPRM proposed safety standards to enable safe operations and an alternate method for Federal safety oversight. The NPRM also opened the public comment period, which was initially scheduled to close on May 11, 2020.

On March 12, 2020, FRA announced that it was holding three public hearings on the NPRM, and was conducting proceedings under 49 U.S.C. 20306.[4] Those hearings were to be held in Dallas, Navasota, and Houston, Texas, between March 31 and April 2, 2020. However, in light of the President's March 13, 2020, national emergency declaration, *Proclamation on Declaring a National Emergency Concerning the Novel Coronavirus Disease (COVID–19) public health emergency,* and the Centers for Disease Control and Prevention (CDC) guidance to cancel mass gatherings of people,[5] FRA postponed the three public hearings on March 30, 2020.[6]

On April 16, 2020, FRA announced, consistent with CDC guidance advising against in-person gatherings, that it decided to convene the three public hearings, and to conduct proceedings under 49 U.S.C. 20306, telephonically between May 4th through 6th, 2020.[7] The choice to conduct these hearings telephonically represented merely a change in the manner of public engagement. Also, in the same announcement, FRA extended the comment period to May 26, 2020, so that members of the public would have adequate time to review and provide written comments on the transcripts of the three public hearings conducted. Further, FRA addressed the numerous requests it received to not hold ''virtual hearings,'' due to concerns over the lack of reliable high-speed internet access, and/or to postpone hearings until they can be safely held in-person.

In response to public comments, FRA explained that it decided to hold telephonic hearings, capable of accommodating the same number of participants as previously scheduled in-person hearings, as it was consistent with ensuring public health and that no technology beyond a telephone was necessary for participation. Moreover, FRA explained that there was no need to further postpone the public hearings or further extend the comment period given the extensive public outreach already conducted related to this proposed rule, and the supplementary nature of the public hearings as related to the opportunity to provide detailed written comments on the proposed rule.

FRA conducted the three telephonic public hearings, and proceedings under 49 U.S.C. 20306, as scheduled and the comment period closed on May 26, 2020. FRA is aware of concerns that the publication of the final environmental impact statement (EIS) effectively cut off the comment period for the NPRM on May 15, 2020. Those concerns are unfounded. The Final EIS stated that—

> As of the execution of this Final EIS on May 15, 2020, oral comments made during the public hearings and written comments submitted to the Docket have raised no new substantive issues relevant to environmental concerns from those received during the public comment period of the Draft EIS (discussed in Section 9.6.2, Public and Agency Involvement, Draft EIS Comment Period, and Appendix H, Response to Draft EIS Comments) or on topics not already covered within this Final EIS. FRA will continue to evaluate comments received during the comment period for the Proposed Rulemaking. FRA will address comments on technical safety requirements proposed in the NPRM in the Final Rule, which will be published in the **Federal Register**.[8]

It is clear from the text of the Final EIS that FRA did not close the rulemaking comment period on May 15, 2020. Rather, FRA informed the public that FRA was not able to consider in the Final EIS comments submitted on the NPRM that were received by FRA after May 15, 2020. This was necessary to allow for printing and distribution of the Final EIS. However, the text of the Final EIS clarified that FRA continued to consider comments submitted during the rulemaking comment period.

IV. Discussion of Comments Received on the NPRM[9]

During the 77-day comment period, FRA received 287 written submissions providing comments on the NPRM and had fifty-two individuals provide testimony during the three days of public hearings. As discussed below, not all comments necessitated a response in this final rule, but all comments were carefully and thoroughly considered.

Although FRA's responses to comments, discussed below, generally

[3] 85 FR 14036.

[4] 85 FR 14449.

[5] *See https://www.cdc.gov/coronavirus/2019-ncov/community/large-events/mass-gatheringsready-for-covid-19.html.*

[6] 85 FR 17527.

[7] 85 FR 21159.

[8] *See* Docket FRA–2019–0068, Final Environmental Impact Statement at ES–5.

[9] Comments submitted regarding the Final EIS are addressed below, under section VII. F. National Environmental Policy Act.

address issues raised in comments critical of the rulemaking or TCRR, or both, FRA also received comments supportive of the rulemaking or TCRR, or both. Commenters providing support ranged from members of the public, to various railroad or railroad-related associations, to State and Federal elected officials. As these supportive commenters did not raise any substantive issues regarding the technical safety requirements proposed in the NPRM, FRA has not provided a response to those comments in this final rule.

FRA also received comments requesting that FRA either extend the comment period or otherwise postpone the issuance of this final rule, or objecting to the telephonic hearing format or the notice provided for the public hearings. These comments are addressed above, in section III. Proceedings to Date.

FRA did not provide responses in this final rule to comments that were considered either outside the scope of the rulemaking, or that raised issues that were previously raised to FRA as part of the environmental review process, which FRA addressed and responded to in the Final EIS released on May 29, 2020, available for review on FRA's website for the environmental review of the proposed Dallas to Houston High-Speed Rail.[10]

FRA's responses below address the remaining comments received. These comments were either critical of the rulemaking or raised issues necessitating further explanation or clarification. As multiple commenters raised similar issues, FRA organized its responses so that like-issues are grouped together.

A. Context and Overview

FRA received comments regarding the timing of the rulemaking in relation to the timing of the EIS. Commenters expressed confusion over how the rulemaking and NEPA processes, and the final rule and the EIS relate to each other. Commenters were concerned about FRA granting a ''safety permit'' without conducting surveys of the entire right-of-way (ROW), or other types of analyses (such as a hazard analysis). In addition, commenters raised concerns about the timing of coordination with other Federal agencies that may need to occur before or during construction.

As discussed in the NPRM, TCRR approached FRA in March of 2014, seeking assistance in understanding how FRA would or could apply its regulations to a high-speed passenger railroad system that replicated the Tokaido Shinkansen HSR system, as operated by JRC.[11] On June 25, 2014, FRA published a Notice of Intent to prepare an Environmental Impact Statement in the **Federal Register**.[12] On December 22, 2017, FRA published its Draft EIS and opened its comment period.[13] FRA stated in the Draft EIS that FRA's regulations at the time did not address safety requirements comprehensively for passenger train operations above 150 mph, such as TCRR's contemplated operation. As such, FRA would need to take some form of regulatory action to ensure the contemplated system would be operated safely, such as issuing an RPA, imposing requirements or conditions by order(s) or waiver(s), or taking some other form of regulatory action.[14] This regulatory action constitutes a Major Federal Action requiring review under NEPA.[15]

The purpose of the NEPA process is to inform the decisionmaker and the public of the potential environmental impacts that may result from the proposed action. As such, the EIS must be finalized before the agency takes the action that is the subject of the environmental review. The Final EIS itself, while a meaningful milestone in the NEPA process, does not permit construction or operations. Rather, the EIS enables FRA to reach a decision that is informed by an understanding of the potential environmental impacts of this rulemaking.

The analysis of potential environmental impacts in the EIS is based on TCRR's conceptual engineering design, which is contained in conceptual engineering reports prepared by TCRR and appended to the Draft and Final EIS. While the conceptual engineering design has been appropriately used to inform the NEPA process, TCRR must complete more thorough engineering and design work to facilitate construction. TCRR will need to consider the agreed upon mitigation and compliance measures[16] and the requirements of this rule as it advances the engineering design. In addition, TCRR must follow all applicable Federal, State, and local requirements, which are separate from FRA's jurisdiction. This includes the Surface Transportation Board (STB), which issued a decision on July 16, 2020, finding that the operation proposed by TCRR is subject to STB jurisdiction.[17]

FRA does not grant any kind of construction approval or permit. Neither does this final rule, by itself, grant any permission or authority for TCRR to operate. Furthermore, this rulemaking does not relieve TCRR of its responsibilities to design, construct and operate a safe railroad. It merely provides alternatives to certain requirements and safety standards, which are more appropriate for the technology and system proposed by TCRR. TCRR must design, operate and maintain its system in compliance with this regulation.

What this final rule does is establish the minimum Federal safety requirements with which TCRR must comply. The publication of this final rule is the beginning for TCRR, not the end, of its continuous obligation to demonstrate compliance with the regulation. FRA will continue to provide safety oversight throughout TCRR's development and testing phases, in addition to during revenue operations. In this manner, the expectations for compliance are no

[10] FRA. *Dallas to Houston High-Speed Rail—Passenger Service from Houston to Dallas https://railroads.dot.gov/environmental-reviews/dallas-houston-high-speed-rail/dallas-houston-high-speed-rail-passenger, Final Environmental Impact Statement.*

[11] 85 FR 14036, 14038.

[12] 79 FR 36123.

[13] 82 FR 60723 and FRA. *Dallas to Houston High-Speed Rail—Passenger Service from Houston to Dallas https://railroads.dot.gov/environmental-reviews/dallas-houston-high-speed-rail/dallas-houston-high-speed-rail-passenger,* Draft Environmental Impact Statement.

[14] While this statement was accurate at the time of publication of the Draft EIS in December 2017, it was incomplete. The Final EIS clarified that it was not just the proposed speed of the TCRR's passenger operations that require FRA regulatory action. As described in the Final EIS, FRA's existing regulations do not adequately address the safety concerns and operational characteristics of TCRR's proposed HSR system. FRA. *Dallas to Houston High-Speed Rail—Passenger Service from Houston to Dallas https://railroads.dot.gov/environmental-reviews/dallas-houston-high-speed-rail/dallas-houston-high-speed-rail-passenger,* Final Environmental Impact Statement, Chapter 1.0, Introduction. Subsequent to the publication of the Draft EIS, in November 2018, FRA published a final rule establishing safety standards for passenger operations up to 220 miles per hour.

[15] FRA. *Dallas to Houston High-Speed Rail—Passenger Service from Houston to Dallas https://railroads.dot.gov/environmental-reviews/dallas-houston-high-speed-rail/dallas-houston-high-speed-rail-passenger,* Final Environmental Impact Statement, Abstract.

[16] FRA. *Dallas to Houston High-Speed Rail—Passenger Service from Houston to Dallas https://railroads.dot.gov/environmental-reviews/dallas-houston-high-speed-rail/dallas-houston-high-speed-rail-passenger,* Record of Decision Attachments, Mitigation Commitments.

[17] Surface Transportation Board Decision, Texas Central Railroad and Infrastructure, Inc. & Texas Central Railroad, LLC-Petition for Exemption-Passenger Rail Line Between Dallas and Houston, Tex., July 16, 2020, Docket No. FD 36025. STB also found that TCRR must file an application under 49 U.S.C. 10901 and 49 CFR part 1150 to seek STB authority to construct and operate its proposed system.

different for TCRR than any other railroad under FRA jurisdiction.

Prior to commencing actual revenue operations, TCRR will need to demonstrate that all the safety critical components system work together as a single, integrated system, pursuant to subpart F of this rule.[18] This involves a number of points of compliance that TCRR will work through over the coming years.

To underscore this point, there are several significant requirements that TCRR must meet. For example, TCRR must demonstrate that the trainset meets the requisite crashworthiness and occupant protection requirements as established under subpart D.[19] Also, TCRR must have its positive train control (PTC) system certified in accordance with 49 U.S.C. 20157 and subpart B of this final rule.[20] Further, TCRR must train and qualify its employees performing safety sensitive functions before those employees engage in their respective work (*i.e.,* drivers will need to be certified under 49 CFR part 240, maintenance employees will need to be qualified in accordance with TCRR's training program established under 49 CFR part 243, *etc.*).[21] Moreover, not only initially, but continuously thereafter, TCRR must demonstrate that its track meets the track safety standards outlined in subpart C. In addition, not only must TCRR comply with the technical safety requirements established in this final rule, it also must comply with the other regulations identified under § 299.3(c), such as part 214, Railroad Workplace Safety; part 219, Control of Alcohol and Drug Use; part 228, Hours of Service of Railroad Employees; and part 270, System Safety Program.

FRA notes that there were questions and concerns raised with respect to the lack of interoperability of the system. However, lack of interoperability is not, per se, a bar to operation in the U.S. It is true that FRA stated in 2016 that it did not envision a network of standalone, non-interoperable HSR systems comprising the nationwide network, but this perspective was built largely on historical precedence and should not be interpreted as a prohibition in any way. And in 2018, FRA stated that standalone systems should continue to be regulated comprehensively (such as through a rule of particular applicability or other specific regulatory action(s)), and on a case-by-case basis, as it is prudent due to the small number of potential operations and the potential for significant differences in their design.[22] Since then, FRA has not seen a proliferation of non-interoperable systems in the U.S. In fact, FRA has seen more potential conventional (steel-wheel-on-steel-rail) operations avail themselves of the Tier III requirements rather than pursuing the more arduous and costly route of being a standalone system. For example, Amtrak's next-generation Acela is in the process of demonstrating that its new trainsets comply with the Tier III requirements. XpressWest, is attempting to conduct Tier III operations between Victorville, CA and Las Vegas, NV (the XpressWest bullet train). And while FRA generally considers matters in the context of the established interoperable general railroad system, FRA's mission is to enable safe, reliable, and efficient movement of people and goods by rail, regardless of the technology used.

B. Regulatory Approach

Several commenters asked why FRA elected to pursue a rule of particular applicability for TCRR. Initially, FRA notes that taking action to provide a regulatory framework to govern the operation of the system proposed by TCRR is consistent with FRA's mission is to enable safe, reliable, and efficient movement of people and goods by rail. Further, as FRA stated when granting the petition to undertake the rulemaking, TCRR's petition demonstrated that TCRR's system would replicate the system and operations of the Tokaido Shinkansen, as operated by JRC, allowing TCRR to take advantage of that system's exemplary 50-year safety record. (Docket FRA–2019–0068, FRA Letter Granting Petition).

As discussed under section III. Regulatory Approach of the NPRM, FRA explained that it was taking this approach as it was consistent with its statement in the Passenger Equipment Safety Standards final rule, published November 21, 2018.[23] FRA considers TCRR a standalone system, as its tracks are not physically connected to the rest of the general system, and would be prohibited from doing so by this regulation. FRA stated in 2018 that a standalone system's regulation would have to bring together all aspects of railroad safety (such as operating practices, signal and trainset control, and track) that must be applied to the individual system.[24] Such an approach covers more than passenger equipment, and would likely necessitate particular ROW intrusion protection and other safety requirements not typically addressed in FRA's more general regulations. With this regulation, FRA continues to believe that addressing proposals for standalone HSR systems in this manner is prudent. Entities considering standalone operations voluntarily assume the higher costs of building new and dedicated infrastructure, knowing they cannot take advantage of the cost savings from sharing existing infrastructure.

Alternatively, FRA could have issued a comprehensive set of waivers from FRA's existing regulations, to the extent permitted by law, under 49 U.S.C. 20103(b), in order to provide regulatory approval to the operation. However, in this case, electing to develop and publish a comprehensive regulation is more efficient. Such a regulation, in addition to providing regulatory approval, institutes a comprehensive regulatory framework, that provides TCRR clarity on the minimum Federal safety standards that it must comply with through technology-specific,[25] performance-based requirements. In addition, it provides the railroad a higher degree of regulatory certainty than waivers, as waivers are revocable, subject to changing conditions, and necessitate renewal, generally every five years. Further, by issuing an RPA, FRA is able to protect the integrity of the system, by establishing regulatory requirements codifying the service-proven technological, operational, and maintenance aspects of the Tokaido Shinkansen HSR system operated by JRC.

C. General Safety Oversight

FRA received a number of comments, both written oral, concerning a lack of adequate safety oversight for TCRR. The commenters expressed general concerns regarding the safe construction of the system, and more specific concerns with construction of the system where it intersects various pipelines. In addition, commenters expressed concerns that no

[18] See the discussion of System Qualification in the NPRM at 85 FR 14036, 14044.

[19] See the discussion of crashworthiness and occupant protection under Trainset Structure of the NPRM at 85 FR 14036, 14039, and under section IV. F. Crashworthiness and Occupant Protection of this final rule.

[20] Please also see the discussion of Automatic Train Control System in the NPRM. 85 FR 14036, 14041.

[21] Please also see section IV. C. 8. Personnel Qualification in the NPRM at 85 FR 14036, 14045, and section IV. G. Reissuance of NPRM of this final rule.

[22] 83 FR 59182, 59186.

[23] 85 FR 14036, 14037; 83 FR 59182.

[24] 83 FR 59182, 59186.

[25] Note, FRA typically tries to craft regulations so that they are technology-neutral and performance-based. Because TCRR's safety case is derived from the use of JRC's technology, and operational and maintenance practices, this regulation was written specifically for that technology to maintain the integrity of the baseline safety case.

one agency would be responsible for the overall safety of the system and for the perceived lack of coordination between three specific Federal agencies: FRA, the Pipeline and Hazardous Materials Safety Administration (PHMSA), and the Federal Energy Regulatory Commission (FERC). As these comments are closely related, FRA will address them together.

DOT does not have plenary authority to regulate every aspect of transportation and is limited to the authority granted to it by Congress. Accordingly, the same is true for each of DOT's operating administrations—the regulatory authority for each one is limited at the Federal level by the scope of authority granted by Congress.

As discussed above in section II. Statutory Authority, FRA's authority to regulate the railroad industry is established in 49 U.S.C. ch. 201. FRA has jurisdiction over all railroads, as defined in 49 U.S.C. 20102, except urban rapid transit operations that are not connected to the general railroad system of transportation. Notably, FRA has broad authority to regulate every area of railroad safety. 49 U.S.C. 20103. But, there must be a nexus to railroad safety for FRA to regulate. However, FRA does not exercise jurisdiction under all of its regulations to the full extent permitted by statute. Based on its knowledge of where the safety problems were occurring at the time of its regulatory action, and its assessment of the practical limitations on its role, FRA decided to regulate something less than the total universe of railroads.[26]

While FRA's jurisdiction is broad, it is not unlimited, and there are some areas where FRA defers to another entity. In practice, FRA exercises its authority through regulations on matters where safety is most effectively addressed at the Federal level, and is necessary to ensure unimpeded interstate commerce, or explicitly required by statute. Some elements of safety are more effectively addressed by other levels of government (*i.e.,* State or local), or by industry itself through the development and maintenance of industry standards and recommended practices. For example, the civil construction of a railroad and its structures are more effectively addressed by State and local requirements that take into account the geotechnical, seismic, and hydrological conditions associated with a local environment. While FRA could assert its safety authority over the design and construction of a railroad bridge, for example, these specific requirements are more effectively addressed and monitored at the State and local level. Similarly, in railroad repair shop environments, where railroads perform maintenance on their equipment, the Occupational Safety and Health Administration provides Federal safety oversight of the work conditions within the shop environment, even though it is a railroad facility and railroad employees are involved.

With that said, FRA clarifies that there is no one agency that is responsible for every aspect of safety as it relates to TCRR. To ensure proper safety of the system, each Federal, State, and local authority must perform its part. FRA will certainly oversee railroad safety where conditions might impact the safe operation of the system, but other agencies will also play a role. Where there are intersections among agencies, appropriate coordination must occur to ensure that the proper agency or entity is enforcing the correct requirements (whether Federal, State, or local), at the appropriate time. In the same spirit, where non-governmental organizations have a potential nexus of safety considerations (*e.g.,* TCRR operations adjacent to Union Pacific Railroad (UPRR) operations), it is expected that those organizations coordinate appropriately with each other in good faith.

In turning to the specific issues raised about safety oversight of the construction of the system, and the safety of the TCRR system in relation to pipelines in the vicinity, FRA clarifies that where a condition impacts the safe operation of the railroad, FRA could intervene to ensure the condition is properly remediated. Although FRA has not exercised its jurisdiction in this area (civil construction), FRA would not be precluded from doing so, should the need arise, to ensure railroad safety. The particular facts of a situation would dictate the appropriate authority to handle the issue.

Generally, TCRR is obligated to comply with PHMSA's safety requirements, including those related to pipeline damage, electrical emissions, and cathodic protection, where there are pipeline crossings. FERC has no jurisdiction or decision-making authority over the construction or operation of TCRR's system. FERC-regulated pipelines occur in the vicinity of the alignment, and relocation and/or maintenance activities of these utilities during the construction of the system may require FERC involvement by the applicable utility providers. PHMSA and FERC requirements are discussed in more detail in Section 3.9.2, Utilities and Energy, Regulatory Context of the Final EIS.[27]

All natural gas utility providers, including Atmos Energy, are required to operate in accordance with operational safety regulations, including regulations promulgated by PHMSA, and would have to consider how external factors might impact their operational safety as the parties communicate and coordinate during planning and development. *Id.*

It is not necessary for FRA to coordinate with PHMSA or FERC in order to develop the minimum Federal railroad safety requirements contained in this final rule. As discussed above, FERC has no involvement during the development of minimum Federal safety standards for the operation of the TCRR system. As TCRR advances from the conceptual engineering that was the basis for the environmental analysis in the Final EIS to design engineering, more detailed information will become available about pipelines that may need to be relocated, which would be subject to FERC jurisdiction. In addition, TCRR is already required to comply with PHMSA requirements regarding pipeline safety applicable to utility crossings, relocations, and/or maintenance activities involving natural gas or hazardous liquid transportation pipelines impacted by TCRR's system. FRA is unaware of any need to amend PHMSA's requirements in light of the contemplated TCRR system.

Although no coordination was necessary, FRA has nonetheless coordinated with both FERC and PHMSA after receiving the public comments regarding pipeline safety and in response to the expressed lack of coordination. Both the EIS and the development of the safety standards in this final rule represent only the beginning of coordination on these issues common to any linear construction project, and FRA would expect TCRR to continue and, as necessary expand, this coordination and engagement as TCRR moves forward.

D. Interference With the Union Pacific Railroad

A number of comments received were focused on the potential impacts to conventional track circuits and signaling technology caused by TCRR's electrified railroad. UPRR submitted

[26] 49 CFR part 209, Appendix A.

[27] FRA. *Dallas to Houston High-Speed Rail—Passenger Service from Houston to Dallas https://railroads.dot.gov/environmental-reviews/dallas-houston-high-speed-rail/dallas-houston-high-speed-rail-passenger,* Final Environmental Impact Statement.

comments expressing these concerns to both the Draft EIS and the NPRM.[28]

FRA notes that the matter of potential interference to conventional track circuits and signaling technology, whether from traction power systems,[29] or other known sources, is a matter that is not unique to the contemplated TCRR operation. The effects and potential interference that can be caused by rail vehicle traction power systems are well-established, and require design-specific and local environmental information to assess. To date, FRA has not promulgated specific regulations addressing the use of traction power systems on railroads holistically, as the matter has been effectively handled by industry standards, local or utility requirements (if applicable), and contractual responsibilities. In this final rule FRA does not deviate from this practice and therefore is not regulating TCRR's traction power system.

Electrified railroads and transit systems operate over and adjacent to rail lines using conventional track circuitry and signaling technology throughout the U.S., including FRA-regulated operations on the Northeast Corridor, and in Pennsylvania, Chicago, northern Indiana, Denver, and San Francisco (specifically the electrification of Caltrain's commuter rail service, currently in progress). Furthermore, numerous light-rail and transit operations utilize traction power systems that operate adjacent to, or in some cases directly on, FRA-regulated properties utilizing conventional signaling technology (*e.g.,* Utah Transit Authority's mid-Jordan extension). FRA points to numerous examples that UPRR itself, operates over or adjacent to 25kVA electrified track, including most notably Denver's A-line, which operates on electrified track directly adjacent to UPRR utilizing the same PTC technology.

Several commenters, including UPRR, provided broad language concerning the need to address potential electromagnetic interference (EMI), but provided no specific justification as to why current industry practice, or the requirements proposed within the NPRM were insufficient. FRA believes the high-level language used by the commenters to describe the hazard, unaccompanied by any supporting technical data, underscores a lack of understanding of the subject matter.

Although commenters did not specify the mechanism by which traction power systems may introduce risk, they may be concerned with the potential for voltages to be induced into parallel conductors (*i.e.,* UPRR's track) which, in turn, could interfere with rudimentary circuit designs and technology being employed by UPRR for track circuit occupancy and grade crossing activation circuits. Commenter references to interference with UPRR's PTC system may likewise relate to the potential for induced voltage that could lead to a track circuit appearing to be unoccupied even though a train may actually be shunting the circuit. This typically occurs with more primitive DC and AC technologies, if not designed to account for such conditions, as those types of primitive technologies cannot decipher the induced voltage from the circuit's own power source. FRA notes that while this is certainly a hazard that must be addressed, such site-specific issues can only be addressed as TCRR proceeds from conceptual to detailed design phases. It is FRA's expectation that TCRR and any affected stakeholders will collaboratively address any potential impacts in the same manner as all other projects have, to date.

Although FRA believes the matter is sufficiently addressed under its current regulatory framework, this final rule addresses traction power system EMI and electromagnetic compatibility (EMC) as it relates to safety critical equipment and systems employed by TCRR. *See* § 299.435(e). This requirement is an adaptation of the electrical systems requirements for Tier II trainsets in 49 CFR 238.425. TCRR proposed applying these requirements to be consistent with deliberations by the Railroad Safety Advisory Committee on a recommended expansion of FRA's Tier III requirements in a future rulemaking. UPRR commented on this requirement contained in the NPRM, but did not understand the requirement, its context, or origins. The requirement under § 299.435(e) is not intended to provide a means for UPRR to negate its responsibilities to ensure that its own systems are designed to protect against undesired inputs and potential interference, as UPRR's suggested modifications and commentary recommend, but rather to illustrate the due diligence performed through the development of the rulemaking. Both FRA and TCRR recognized the importance of EMI/EMC for electrified high-speed railroads, and the inclusion of this requirement will ensure TCRR is responsive to the issue.

UPRR also raised concern over sightlines being reduced at a particular highway-rail grade crossing on UPRR's system due to the possible future placement of a TCRR viaduct support column. UPRR's concern is based on the conceptual engineering provided as part of the environmental review process. Similar to the above discussion on possible EMI with UPRR's signal system, FRA would expect that the two railroads work together, and with the owner of the roadway, to identify and mitigate any hazards associated with reduced sightlines at any impacted highway-rail grade crossing, once final designs are developed. In addition, FRA expects that any localized risk presented regarding these issues would be identified in TCRR's risk-based hazard analysis program under part 270 and mitigated appropriately.

E. Track Safety

Several commenters raised concerns with the potential for buckling of the track structure due to high ambient temperatures in Texas during the summer. These general concerns were supplemented by comments that soil conditions and curvature in the alignment could exacerbate this potential. Many cited challenges UPRR has faced in this regard to support their concerns. A certain set of commenters further argued that an expert report had identified ''sharp curves'' in the alignment as a potential risk when compared to tangent track; while it is factually correct that the probability of rail buckling is higher for a curve compared to tangent track, the commenters seem to have mischaracterized this relationship in this particular instance to support their point. In either case, this regulation addresses this risk in a manner that is consistent with how this risk is managed for all railroads under FRA's jurisdiction, and when combined with JRC's adopted practice, provides a level of engineering and internal rail stress management that is superior to most, if not all, North American practice.

The continuous welded rail (CWR) program, as proposed in the NPRM, is a translation and an adaptation of JRC's designs, standards, and procedures. Like the track and CWR requirements applicable to railroads on the general system under 49 CFR part 213, the track and CWR requirements in this rule are independent of the specific environmental conditions over which they are applied. The governing site-specific geotechnical, drainage, and

[28] *See* Section 3.15, Electromagnetic Fields of the Final EIS for a discussion of the potential impacts associated with the generation of electromagnetic fields.

[29] A tractive power system is a system that provides a means to produce tractive effort to a trainset or motive power unit, *i.e.,* the propulsion system. Most traction power systems utilize the transmission of direct current (DC) or alternating current (AC) electricity by means of an overhead wire or powered third rail to convert electrical energy to tractive effort (the force that accelerates a vehicle along a track).

weather conditions will drive the detailed design of the track and its support structure in order to achieve and maintain compliance with the regulatory requirements. (Please see the discussion under section IV. A. Context and Overview of this final rule.) These safety requirements set the standards that must be maintained by the track and track structure design. In addition, these safety requirements set the operational limitations associated with various track conditions. In effect, these represent variables that the railroad must consider when determining its final designs. If it is not possible to attain the required alignment geometry or maintain a specific track class due to site specific conditions, then the design operating speed must reflect what is safely achievable. Concurrently, safe operational limits will also be validated by comprehensive dynamic tests of the actual revenue trainsets over the entire line, as required under Subpart F. While the variables at play in this rule are specific to TCRR (based on JRC's designs), the fundamental railroad engineering principles and design process is not. To be clear, the conceptual engineering report included as part of the Final EIS does not represent the final design of TCRR's alignment and track structure. This regulation will help TCRR establish a safe, detailed design.

The track safety standards under Subpart C of the final rule translate the track safety standards as implemented on JRC's Tokaido Shinkansen HSR system for TCRR's HSR system. As discussed in the NPRM, the Tokaido Shinkansen's technical safety requirements were developed over many years, and have been highly optimized in conjunction with the rest of the system (*i.e.,* signal and train control, and rolling stock), since service began over 50 years ago. The primary reason for adopting the Tokaido Shinkansen's technical safety requirements for TCRR is to ensure the safety of the TCRR operation by protecting the integrity of the system as established by JRC. These requirements are, in many cases, more stringent than requirements under 49 CFR part 213 that were developed for operation of a broad range of equipment (freight and passenger) over the general network.

Furthermore, the approach JRC takes to manage internal rail stress in the Tokaido Shinkansen system is very different than standard North American practice. The final rule requires TCRR to comply with the JRC approach, to ensure that the integrity of the safety case behind the Tokaido Shinkansen can be maintained. In addition to the comprehensive use of well-designed expansion joints and other engineering means intended to manage internal rail stress caused by thermal (and other) loads, the regulation requires procedures, operational restrictions, or both, for high temperature scenarios that are more advanced and conservative than those employed by North American railroads. For example, these procedures require TCRR to monitor rail temperature continuously, which is far more stringent than the ''average'' temperature approach often used by most railroads. Likewise, a system of reference markers is required to be used on the field side of all track to help proactively identify any track shift that might occur. The ties and fastener system, and the ballast, are specifically engineered for the tonnage and speed of the equipment operating over it to provide maximum resistance to track buckling. This is superior to the practice of most U.S. railroads, which have to design to a general standard since a variety of equipment traverses their track. The comprehensive monitoring of track conditions through temperature, geometry and ride quality readings, in addition to traditional visual inspections, enables the railroad to analyze the conditions of the rail in a manner that is far superior to using only visual observation as suggested by commenters.

A number of comments also focused on the effects that heat can have on CWR, and the fact that alignment curvature can increase horizontal rail forces which could, in-turn, lead to buckling if the track is not sufficiently restrained and internal rail stress is not managed effectively. Many comments focus on concerns associated with a specific curve referred to as the ''Hockley curve.'' These comments primarily stem from Delta Troy Interests, LTD. (Delta Troy), and its commissioned study conducted by the Virginia consulting firm R.L. Banks & Associates, Inc.[30] (RLBA). These comments and the RLBA study attempt to connect an increased probability for buckling to occur in non-tangent (curved) track, and particularly with the Hockley curve, with the fact that non-tangent rail can experience higher lateral rail forces due to thermal expansion. This specific portion of the proposed alignment does not represent a geometrically challenging portion, but Delta Troy indicated that its concern for this portion of proposed alignment is underscored by the fact that it traverses a site of a planned real estate development by the company.

The commissioned RLBA study loosely connects the concern of track buckling with the fact that this particular curve includes a radius that could be near the allowable limit for maximum speed operation. Delta Troy, RLBA, and other commenters, insinuate that a different alignment would enable TCRR to avoid ''numerous sharp curves.'' Whether intentional or not, the comments and RLBA analysis ignore the fact that the Hockley curve (and other similar curves designed to allow for maximum design speed of a high-speed train), by nature, utilize a curve radius that is not fairly compared to the high-degree curvature that can pose a risk for track buckling, particularly when compared to freight railroads that utilize a more economical focused approach to CWR management. To insinuate that the curves are ''sharp,'' and thus intrinsically unsafe as proposed, is simply not true.

The RLBA study attempts to describe the effects of curvature on the potential for track buckling. However, this is an issue that is not unique to TCRR, and there are various means by which track can be designed to address and mitigate these concerns safely. Further, while the RLBA study recognized that the NPRM contained a requirement for the railroad to develop a CWR plan to address internal rail stress related to CWR, the study incorrectly asserts that FRA should dictate specific alignment geometry as a matter of safety. This is not appropriate or necessary, as the safety concern is addressed by the track safety standards and CWR requirements, as described above. Moreover, this final rule addresses these issues in the same manner as all other U.S. railroad operations subject to FRA's jurisdiction.

F. Crashworthiness and Occupant Protection

Some commenters raised concerns regarding the crashworthiness requirements proposed in the NPRM. An examination of these comments, however, suggests that they stem from an incomplete reading of the NRPM. FRA proposed to retain the crashworthiness and occupant requirements established by JRC intended to address potential residual risks to the operation and to ensure the trainset can handle the expected operational loads experienced in the intended service environment.[31] While these requirements are not directly comparable to standard U.S. practice, as the NPRM explains, the service

[30] *See http://www.rlbadc.com.*

[31] 85 FR 14036, 14039.

environment of TCRR's contemplated system is vastly different and presents significantly less risk than conventional North American railroad rights-of-way. *Id.* To adhere to requirements based on hazards that have otherwise been heavily mitigated or eliminated would require significant modification to the existing service-proven trainset design by changing the weight and dynamic characteristics, making it effectively a new trainset design, which would negate the service-proven nature of the system.

Some commenters asserted that FRA is exempting TCRR from any crashworthiness requirements so that the N700 series trainset technology could be imported. This assertion, however, is not supported by the requirements proposed in the NPRM, as FRA makes clear that its approach is to ensure that the trainset is safe for the environment in which it will operate. To this end, FRA is including additional requirements that are not inherent in the JRC approach to trainset structure design. These requirements include a dynamic collision scenario analysis that is designed to address the residual risks that could potentially exist within the TCRR operating environment.[32] Of particular note, in this instance, is the inclusion of the steel coil collision scenario outlined in § 299.403(c). Despite the safety record of JRC's Tokaido Shinkansen system, FRA believes that the North American environment poses unique risks with respect to potential objects that might somehow enter the protected ROW, either by accident or on purpose. In this case, FRA believes that requiring dynamic collision scenario analysis using the 14,000-lbs steel coil scenario derived from existing requirements to protect against risks presented by grade crossings can serve as a conservative surrogate for potential hazards that might be present on the TCRR ROW (*e.g.,* feral hogs, stray livestock, unauthorized disposal of refuse). With the inclusion of this dynamic collision scenario, and adaptations of existing U.S. requirements on emergency systems and fire safety, FRA believes it has reasonably addressed risks unique to the TCRR operating environment in a manner that appropriately considers crashworthiness and occupant protection standards for the operating environment intended, while at the same time keeping intact the service-proven nature of the equipment.

G. Reissuance of NPRM

UPRR commented[33] that FRA needs to re-notice the proposed rule so that it: (1) Adequately considers the safety impact on already existing railroads that will intersect and/or run adjacent to the proposed system; (2) specifically evaluates whether modification of each safety-critical aspect of the Japanese Shinkansen system is needed in order to transplant and implement them in the United States; and (3) provides sufficient detail to enable the public to understand the safety standards, operational requirements, or regulatory framework applicable to TCRR fully. UPRR's comments express concern that the NPRM ''lacks any analysis of the potential disruption to other railroad operations and infrastructure and the consequential safety and economic impacts to communities and the region,'' and the NPRM ''focuses solely on the safety of [TCRR's] operations and neglects to consider the potential impact on safety of current rail operations; operations that are fully compliant with existing FRA regulations.''[34]

FRA received a similar comment from Delta Troy.[35] Delta Troy identified six ''deficiencies'' that ''plague the safety analysis'' in the NPRM, and elaborated that any attempt to fix the deficiencies in a final rule would be so extensive that the final would look nothing like the NPRM and therefore would not be a ''logical outgrowth'' of the NPRM, thus necessitating FRA to re-notice the proposed rule. The six areas identified by Delta Troy are that the NPRM: (1) Failed to adequately evaluate possible EMI from TCRR to the adjacent UPRR rail line;[36] (2) unreasonably assumed exigent circumstances will not require coupling or uncoupling;[37] (3) failed to examine the safety impact of TCRR's grade separation proposal on the adjacent UPRR rail line;[38] (4) failed to acknowledge or examine the possible increase in truck traffic and grade crossing usage due to TCRR's proposed viaduct;[39] (5) did not recognize that a different alignment could alleviate the risks of heat-induced track buckling and slow orders;[40] and (6) ignored the context and local circumstances in which proposed operations will occur.[41]

FRA responds to Delta Troy's six identified ''deficiencies'' in other areas of this final rule, and so FRA will address UPRR's concerns here. Primarily, UPRR expressed concern with possible EMI resulting from TCRR's contemplated system, along with potential increased risk at certain grade crossings, which is addressed in section IV. D. Interference with the Union Pacific Railroad. What remains are essentially concerns regarding whether the requirements of the rule, as they were proposed, properly account for the effect on safety of adjacent railroads, that FRA has somehow deprived the public of a meaningful opportunity to comment, and that the requirements are consistent with the requirements of JRC.

UPRR stated in its comment that the NPRM was conclusory in its approach in ''importing'' the Shinkansen's regulatory framework without properly accounting for the effect on the safety of other existing rail operations or of the costs imposed on those other rail operations.[42] However, FRA expects that the final rule framework would have no direct bearing on the safety of UPRR's operation, assuming it is in compliance with its own requirements to protect its systems from electrical interference. FRA makes clear that it is imposing its own regulatory regime on TCRR. As discussed above, this rulemaking is translating the safety-critical technical requirements as implemented on JRC's Tokaido Shinkansen system to allow FRA to provide effect safety oversight, as discussed in the NPRM.[43]

UPRR also stated that FRA has deprived the public of a meaningful opportunity to comment. FRA disagrees and has clearly met the minimum requirements of the Administrative Procedure Act (APA). Under 5 U.S.C. 553(b)(3), when engaged in rulemaking, an agency is required to provide notice of a proposed rulemaking to the public through publication in the **Federal Register**, and shall, among other things, include either the terms or substance of the proposed rule, or a description of the subjects and issues involved. The NPRM, as it explained, was based on the petition and associated supporting

[32] This reference to ''operating environment'' or ''environment in which the equipment will operate'' or other similar references, means, in this discussion, the fully dedicated, fully grade-separated ROW that is not comingled with any other type of equipment (freight or passenger).

[33] Docket No. FRA–2019–0068, Document ID: FRA–2019–0068–0316.

[34] *Id.*

[35] Docket No. FRA–2019–0068, Document ID: FRA–2019–0068–0315.

[36] *See* section IV. D. Interference with the Union Pacific Railroad of this final rule.

[37] *See* sections IV. J. Emergency Response and V. D. Decision under 49 U.S.C. 20306, Exemption for technological improvements of this final rule.

[38] *See* section IV. D. Interference with the Union Pacific Railroad of this final rule.

[39] *See* section IV. D. Interference with the Union Pacific Railroad of this final rule.

[40] *See* section IV. E. Track Safety of this final rule.

[41] *See* section IV. J. Emergency Response of this final rule.

[42] *See also* section IV. M. Regulatory Evaluation of this final rule.

[43] 84 FR 14036.

technical information, all of which was made available for public review and scrutiny.[44] In addition, the NPRM exceeded the statutory requirement to provide merely the substance of the proposed rule, by providing the entirety of the proposed rule text for critical examination by interested members of the public.

In a related concern, UPRR stated that it was unclear what FRA meant when it used the terms ''shall be based on'' in the regulatory text, when referring to requirements for TCRR. For example, under § 299.707, FRA is requiring that TCRR's initial maintenance schedules, included as part of its inspection, testing, and maintenance program, be based on those maintenance schedules in effect on JRC's Tokaido Shinkansen system. UPRR asserted that the use of this reference created ambiguity to the degree that it denied the public a meaningful opportunity to comment. Again, FRA disagrees. FRA is unclear as to what ambiguity exists in light of the information in the rulemaking docket, in both meeting presentations and associated section analyses, provided by TCRR.[45] FRA placed this information in the docket, to allow interested members of the public to scrutinize and provide comment. As part of those documents, the maintenance intervals in effect on JRC at the time of submittal of the documents was included. As part of the inspection, testing, and maintenance program review and approval process under this final rule, TCRR must demonstrate how its initial maintenance intervals replicate those of JRC. FRA would expect TCRR to include the most current maintenance intervals in use by JRC for the Tokaido Shinkansen.

Along with the claims discussed above, UPRR raised several comments regarding some of the regulatory text associated with §§ 299.13(c)(3), 299.207, 299.209, 299.215, 299.341, and 299.351–299.357. The concerns were focused on ensuring that the language of those sections, as proposed in the NPRM, would be consistent with similar requirements for JRC's Tokaido Shinkansen system so that TCRR would be able to replicate the Tokaido Shinkansen properly. UPRR was concerned that FRA did not ensure this consistency and asked FRA to explain in detail whatever differences might exist in a reissued NPRM so that the public could meaningfully participate in the rulemaking process.

FRA believes that UPRR does not understand fully what FRA stated in the NPRM, nor what the rule text is accomplishing for the above-cited sections of this final rule. As discussed in the NPRM, TCRR's petition represented that the regulatory requirements offered by TCRR were translated from the technological and operational aspects of the JRC Tokaido Shinkansen.[46] Each of the above-cited sections referenced by UPRR are either technological or operational in nature.

First, as it relates to the personnel training requirements under § 299.13(c)(3), it is unclear to FRA what precise misunderstanding UPRR has about this proposed requirement. Section 299.13(c)(3) requires TCRR to comply with part 243, which is a performance-based regulation that is designed to accommodate myriad different railroad job functions and personnel qualifications. This part provides a railroad with broad autonomy in determining how its safety-critical employees are categorized and does not dictate in any way the required level of training or qualification of employees as UPRR seems to suggest. Part 243 is designed to help ensure that safety critical roles and qualifications are identified, and that proper adherence to an adequate training program is maintained and documented. JRC's training and qualification program is very thorough and comprehensive and far exceeds the level of employee training, development, and hands-on experience practiced by most, if not all, North American rail operators. As such, TCRR should have no difficulty complying with the requirements of part 243, and TCRR should be able to leverage fully JRC's proven approach to personnel training and qualification.

In a similar vein, UPRR's comment regarding the PTC Safety Plan Content Requirements in § 299.207 is equally perplexing. The PTC requirements proposed are derived from 49 CFR part 236, subpart I, but modified to reflect only those requirements common to all systems, and specific to standalone systems, such as TCRR's. PTC is not a technology itself, but rather a set of performance requirements that establish the minimum functionality a train control system must have, the most fundamental of which are required by statute. PTC terminology used in this context is unique to the U.S. statutory and regulatory requirements. The PTC Safety Plan (PTCSP) is the primary means by which the railroad demonstrates compliance with the requirements in subpart B of this final rule. And, as long as TCRR's train control system, as implemented in Texas, meets the minimum performance and functionality requirements of subpart B, what requirements exist in Japan are irrelevant in relation to PTC, especially as Japan has no equivalent PTC requirement. To put it another way, subpart B requires that TCRR demonstrate that its PTC system, as implemented and installed in Texas, fulfill the minimum safety requirements—it is not intended to prove JRC's technology or its implementation. Likewise, paragraph (a)(6) dictates that TCRR demonstrate the adequacy of its program, but it does not prescribe how TCRR must do so. In this respect, any pertinent training or qualifications required for the successful implementation of JRC's Automatic Train Control (ATC) technology would be expected to be articulated within TCRR's plan and consistent with JRC's training.

With respect to §§ 299.209 and 299.215, these sections were not specifically included in TCRR's petition. However, in TCRR's petition, TCRR stated that it would comply with subpart I of 49 CFR part 236, *in toto.* As further explained in the NRPM, FRA stated that it was tailoring the requirements of part 236, subpart I, to TCRR's standalone PTC system.[47] Sections 299.209 and 299.215 contain virtually equivalent requirements as §§ 236.1029 and 236.1039. And with respect to the cited track sections, §§ 299.341, and 299.351–299.357, TCRR provided FRA the language for these sections, again representing in its petition that they translate the technological and operational aspects of JRC's Tokaido Shinkansen.

In addition, part 299, subpart B of this final rule is a performance standard. This provides TCRR appropriate flexibility in how it complies with the requirements, allowing TCRR to replicate the service-proven, safety-critical aspects of JRC's Tokaido Shinkansen. In its regulatory language, FRA is not requiring TCRR to deviate from JRC practice, but expects TCRR to remain consistent with JRC practice.

In addition to the six ''deficiencies'' noted above, Delta Troy also commented that FRA's NPRM was deficient and contrary to the APA in that it did not provide adequate notice in the docket of an ''economic analysis,''

[44] 85 FR 14036, 14038.

[45] For example, the following provides information on maintenance intervals associated with rolling stock: Docket No. FRA–2019–0068, Document IDs. FRA–2019–0068–0016 ''2017—Exhibit C–8 Subpart J Section Analysis (Inspection Testing and Maintenance),'' FRA–2019–0068–0022 ''2017—Presentation M10P04—N700 Bogie ITM (CI redacted),'' and FRA–2019–0068–0024 ''JRCs Practice on Movement of Defective Equipment (CI redacted).''

[46] 85 FR 14036.

[47] 85 FR 14036, 14041.

and that the NPRM was based on a ''world that no longer exists.''

In support of its assertion that FRA failed to provide adequate notice of an ''economic analysis'' in accord with the APA, Delta Troy argues that it could not find any type of economic analysis despite FRA's repeated mentioning of such an analysis during the telephonic hearings held on May 4–6, 2020. Delta Troy cited to the transcript of the May 6th hearing, noting that on page 3 of the transcript the Hearing Officer stated that the ''purpose of tonight's hearing is for FRA to listen to any interested party's comments on the technical safety requirements proposed in the NPRM along with the associated economic analysis published in the rule's online docket.'' [48] Further, Delta Troy explained that it examined the NPRM and could not find an economic analysis contained in the NPRM, nor in the rulemaking docket.

FRA disagrees. FRA provided its evaluation of the regulatory burden on the regulated entity in the NPRM as it is required to under Executive Order (E.O.) 12866.[49]

In support of its claim that the ''NPRM must be replaced as it is based on a world that no longer exists,'' Delta Troy invokes the coronavirus disease 2019 (COVID–19) public health emergency. Delta Troy asserted that the future of intercity travel will be dramatically different from the recent past. It further asserted that the decision to move forward with the rulemaking was based on projected ridership and train designs that were developed prior to the COVID–19 public health emergency, and thus now must be re-evaluated in light of the current global situation, and no final rule should be issued until the re-evaluation is complete.

While FRA agrees that these are unprecedented times, it disagrees that the rulemaking is obsolete. As explained in section IV. B. Regulatory Approach of this final rule, FRA advanced the rulemaking because TCRR's proposal: (1) Is consistent with FRA's mission is to enable safe, reliable, and efficient movement of people and goods by rail; and (2) demonstrated that the proposed system would replicate the system and operations of the Tokaido Shinkansen system and its 50-year safety record. This rulemaking removes the government barrier to private industry seeking to bring transportation innovations to the United States; FRA's analysis in an E.O. 12866 context properly relates to the effects of government regulatory burdens, and not whether TCRR's proposed operation is financially viable. In addition, the analysis performed under E.O. 12866 as part of the NPRM and this final rule do not rely on ridership estimates or other projections of demand.

To the commenter's assertion that train design must be reevaluated due to the pandemic, the technical safety requirements identified in the NPRM remain valid. FRA is not amending any of its other passenger equipment safety regulations to mandate train designs account for any form of social distancing. FRA expects the railroads and the public to abide by protocols and guidance issued by other Federal agencies, and State and local governments, and does not believe that rulemaking is appropriate.

H. Electrical Arcing From the Overhead Catenary System

A number of commenters raised concern about the ''sparking'' effect often associated with electrified trains. This concern was tied to the fact Atmos Energy maintains a natural gas compression station near the contemplated TCRR alignment, and that a ''spark'' from a passing high-speed train could in-turn ignite some volume of gas present at either the compression station, or pipelines along the route. However, no specific context or evidence was provided to elaborate why the design or operation of either the railroad, the compression station, or a pipeline, provides for a specific risk to adjacent property.

The ''spark'' often associated with electrified train systems is caused when there is a separation between the power source (the catenary system) and its collector (the pantograph on the roof of the train). When this separation occurs, it is possible for current to continue to flow between the power source and collector. In these situations, the high voltage ionizes the air and causes what is known as an electrical arc or ''spark'' between the two components. This occurrence is part of the normal operation of an electrical traction power system like the one proposed by TCRR, and by itself does not pose any particular safety risk. Existing FRA regulations do not cover electrical arcing because of the lack of a particular safety risk. Further, the JRC technology and maintenance practice that is being adopted by TCRR has refined this interface to minimize this arcing effect significantly, and to a degree that is not comparable to what might be witnessed on light-rail or other conventional U.S. electrified operations.

FRA does not believe that this issue requires regulatory action within this rule. However, as this issue has been raised, FRA expects TCRR to work with Atmos Energy, and any other entity to examine the risk, and take whatever precautionary measures that are necessary. To this extent, FRA would expect TCRR appropriately addresses this risk within the context of its System Safety Program, and is willing to provide assistance in coordinating with external entities or regulators, as appropriate.

I. Right-of-Way Barrier Protection

A certain number of comments were raised concerning ROW protection and the potential use of barriers in certain situations. These comments primarily involved the ability of feral hogs to access the track, but also raised questions regarding the protection of TCRR structures and track from UPRR derailments.

With respect to general ROW protection, and specifically the risk posed by local feral hogs, FRA notes that safety is generally established through multiple fronts. In this case, in addition to requirements for ROW protection within this rule under § 299.13(b)(3), FRA also points to its crashworthiness discussion in section IV. F. Crashworthiness and Occupant Protection, above. Most notably, in developing the requirements of this final rule, both FRA and TCRR considered the potential for differences between the Japanese and U.S. operating environments. The existence of animals and other potential obstructions supports the adoption of the final rule requirement to verify the crashworthiness of the trainset structure to protect against the residual risk that might exist beyond even the best ROW protection measures.

As it relates to protection of TCRR structures or ROW from potential incursions due to UPRR derailments, such mitigations are not covered under FRA's current regulations, and protection of bridge piers is typically driven by industry or local standard. Factors that would drive such decisions are highly variable based on specific site conditions (*e.g.,* track centers, curvature, difference in height between top-of-rail, *etc.*) and cannot be adequately addressed globally. FRA expects that once structural designs exist, any localized risk presented would be identified in TCRR's risk-based hazard analysis program under part 270 and mitigated appropriately.

[48] 05.06.2020—TCRR Telephonic Hearing Transcript at page 3, *available at www.regulations.gov,* Docket No. FRA–2019–0068, Docket ID: FRA–2019–0068–0300.

[49] Section V. A. Executive Orders 12866, 13771, and DOT Regulatory Policies and Procedures of the NPRM. 85 FR 14036, 14047.

J. Emergency Response

As part of the public hearing process, several comments were received with respect to emergency response and access for first responders. These comments largely articulated concerns regarding the effect that the absence of certain safety requirements might have on first responders' ability to get inside a trainset, the impact construction might generally have on emergency response times, the ability of first responders to access the ROW, and coordination with local first responders to ensure adequate capability to respond to an emergency on the high-speed railroad. Comments related to the first topic, the ability first responders gaining access to a trainset, are addressed in the discussion regarding safety appliances under section V. D. Decision under 49 U.S.C. 20306, Exemption for technological improvements of this final rule. Those comments related to potential disruptions to normal emergency response routes caused by construction are outside the scope of this rulemaking.[50] FRA defers to local and State officials in the coordination of potential road closures or other impacts to potential emergency response times caused by construction.

As it relates to comments regarding ROW access and TCRR coordination with local first responders, FRA notes that the NPRM proposed to apply all Passenger Train Emergency Preparedness requirements contained within 49 CFR part 239, and is doing so in this final rule. Right-of-way access, coordination, and establishment of the emergency equipment needs and training requirements for local first responders are a part of the planning process required by part 239. Many of these specific planning activities cannot begin in earnest until final ROW designs are developed. This rule only establishes the planning requirements, with the execution of those requirements naturally occurring at a later time, and is identical to the requirements with which all other passenger railroads in the U.S. must comply.

A number of commenters objected to TCRR's limited early engagement with local first responders. Specifically, commenters raised concern with TCRR having asked the local first responders what equipment the first responders thought would be necessary in responding to an emergency on the railroad. Commenters expressed disappointment that TCRR was not advising the local first responders as to the type of equipment TCRR would expect the first responders to have. In addition, commenters noted that TCRR has not provided a list of necessary or required equipment to the local first responders. This appears to be a byproduct of misunderstanding the level of maturity of the system, and the fact that only conceptual design exists at this stage. The actions taken by TCRR at this early stage demonstrate a proactive approach to the matter, and will help inform the railroad on the capability of the local first responders along the alignment. This knowledge will benefit TCRR as it continues to develop the engineering design, and situations such as ladder height, emergency egress and equipment needs, and ROW access capability.

K. Noise Emission and Vibration

Several commenters raised concerns about the noise emission and vibration that will be caused by the passing of the trainset once in service. With respect to noise emission, when looking at § 299.3(c)(3) as proposed in the NPRM and in this final rule, TCRR must comply with 49 CFR part 210, Railroad Noise Emission Compliance Regulations, which prescribes minimum compliance regulations for enforcement of the Railroad Noise Emission Standards established by the Environmental Protection Agency in 40 CFR part 201.

There are no required vibration standards for railroads. However, FRA evaluated the potential impacts resulting from vibration during construction and operation of the HSR system in the Final EIS, and found that while there may be some annoyance impacts due to vibration during construction, no vibration impacts due to operations are anticipated. Nevertheless, the Final EIS identified mitigation measures for potential noise and vibration impacts, which includes compliance with local regulations on noise and vibration as well as conducting additional noise and vibration assessments and monitoring noise and vibration during operations testing.[51] In addition, where construction activities such as pile driving for structures and vibratory compaction for ground improvements would occur within 50 feet of underground utilities, TCRR would coordinate with the utilities to identify where relocation and/or encasement would be needed to avoid vibration damage from nearby construction, and compensate the utilities for such work.[52] TCRR has agreed to implement the identified mitigation. *See* section VI. C. Mitigation Commitments, of this final rule.

L. Eminent Domain

One commenter raised the issue of eminent domain and asked FRA what influence its Federal actions would have on any eminent domain issue. To the best of FRA's knowledge, eminent domain powers under the Fifth Amendment of the U.S. Constitution are not involved. FRA understands the eminent domain issues to be centered on the interpretation of various Texas State statutes. FRA defers to the State of Texas to interpret its own statutes.

M. Regulatory Evaluation

Several commenters discussed the financial feasibility of TCRR and stated that FRA did not take this into account when it issued the NPRM. However, it is outside FRA's regulatory scope to consider the economic viability of a specific railroad project, so it was not addressed as part of the NPRM.[53] FRA's economic analysis in the NPRM evaluates the impact of the Federal regulatory burden on TCRR operations.[54] FRA's responsibility is to ensure that the railroad industry is operating in a safe manner, not to examine the economic viability of a specific project.

In addition, several commenters asserted that FRA did not adequately account for the costs in its economic analysis. As discussed in the NPRM, FRA concluded that since TCRR's compliance with the requirements in this rulemaking are voluntary, the rulemaking does not impose any additional Federal regulatory burdens.[55] Costs such as equipment design,

[50] While outside the scope of rulemaking FRA considered potential disruptions to emergency response routes in Section 3.16.5.2.2, Safety and Security, Build Alternatives of the Final EIS. TCRR has agreed to implement mitigation to address potential delays. *See* Section 3.16.6.2, Safety and Security, Mitigation Measures of the Final EIS, SS–MM#1, Model Construction Impacts on Emergency Response Times of the Final EIS.

[51] FRA. *Dallas to Houston High-Speed Rail—Passenger Service from Houston to Dallas https://railroads.dot.gov/environmental-reviews/dallas-houston-high-speed-rail/dallas-houston-high-speed-rail-passenger,* Final Environmental Impact Statement, Section 3.4., Noise and Vibration.

[52] *Id.* at 3.4–33.

[53] 85 FR 14036, 14048, FN 10.

[54] In addition, as required by NEPA, FRA considered as part of the EIS the overall direct and indirect impacts to the socioeconomic environment that may occur as a result of TCRR's construction and operation of its proposed project, including employment and earnings, property impacts, property tax and net change in tax revenue. FRA. *Dallas to Houston High-Speed Rail—Passenger Service from Houston to Dallas https://railroads.dot.gov/environmental-reviews/dallas-houston-high-speed-rail/dallas-houston-high-speed-rail-passenger,* Final Environmental Impact Statement, Section 3.14.5.2.3, Economic Impacts.

[55] 85 FR 14036, 14047.

equipment changes, associated studies, and other costs are costs voluntarily assumed by TCRR to create the specific system contemplated by this rule. TCRR petitioned FRA for a rulemaking so it could create a unique HSR system, which does not meet Tier III passenger equipment requirements.

UPRR commented that the rulemaking did not address the effect of the implementation of TCRR's system and on the safety of other entities. UPRR further stated that although TCRR's actions may be considered voluntary, TCRR's system would introduce outside interference on adjacent railroads, which require action and incur cost to address. FRA understands that there could be costs to existing railroads when an adjacent railroad begins operations, these costs will not necessarily occur and FRA is unable to estimate them. These costs are speculative and are difficult to determine because the final designs for the TCRR project are not yet developed. Therefore, these costs are not included in FRA's economic analysis. Further, as explained above in response to UPRR concerns regarding potential interference, FRA expects that the final rule framework would have no direct bearing on the safety of UPRR's operation.

Several commenters also stated that the requirements, as proposed in the NPRM, would have an impact on small entities and FRA did not account for this within its regulatory flexibility analysis. FRA, in conjunction with the Small Business Administration (SBA), has developed a definition of small entities that is used when evaluating the economic impact of regulations. Commuter railroads serving populations of 50,000 or less are considered to be small entities, therefore TCRR is not a small entity and the regulation will not impact any small entities. For further information, please see FRA's discussion of its regulatory flexibility analysis, as required by the Regulatory Flexibility Act [56] and E.O. 13272,[57] under section V. B. Regulatory Flexibility Act and Executive Order 13272; Regulatory Flexibility Assessment of the NPRM [58] and section VII. B. Regulatory Flexibility Act and Executive Order 13272; Regulatory Flexibility Assessment of this final rule.

N. Enforcement

As stated in the NPRM under section IV. F. Enforcement, FRA will publish a civil penalty schedule on its website.[59] Because such penalty schedules are statements of agency policy, notice and comment are not required prior to their issuance, nor are they required to be published in the CFR.[60] Although not required, FRA solicited comment on this subject, but did not receive any comments on the types of actions or omissions under each regulatory section that would subject a person to the assessment of a civil penalty.

FRA also clarifies that other enforcement tools, such as emergency orders, individual liability actions, or compliance orders, are available for FRA to use, as necessary, in providing safety oversight of TCRR.

V. Discussion of Final Rule and Regulatory Changes

A. Non-Substantive Corrections

TCRR, in its comments, pointed out a few instances where FRA had inadvertently included (or failed to include) certain regulatory text that was not submitted in the proposed rule text included with TCRR's petition. In response, FRA is modifying the final rule, but these changes are not substantive.

Under proposed § 299.301(b), FRA included maintenance-of-way (MOW) yards (locations where MOW equipment is stored) when discussing restoration or renewal of track class H2. As track within MOW yards will be classified only as track class H0, it was not correct for FRA to include a reference to yards in this provision. Accordingly, in this final rule, FRA has removed ''yards and'' from paragraph (b).

Under proposed § 299.345, FRA converted a table appearing in TCRR's petition to rule text. The table depicted the frequency of certain types of required track inspections. In converting the table to text, FRA clarified the requirements contained in the table. However, in doing so, there were also some inadvertent errors in the NPRM rule text. Under § 299.345(b)(1), which contains the requirements for safe walkway inspections, FRA failed to include the text from footnote 1 to § 2xx.343(c) from the TCRR petition's rule text. The footnote permitted a visual inspection during overnight hours and, in the event of extreme weather, from the trainset cab in lieu of a safe walkway inspection. To correct this oversight, FRA is adding new paragraph (b)(1)(vii), which permits a visual inspection from the trainset cab or an on-track visual inspection in lieu of a safe walkway inspection in the event of extreme weather. FRA slightly modified the language to make clear that an inspection during the overnight hours is considered an on-track visual inspection.

In addition, under § 299.345(b)(2), FRA proposed requirements for on-track inspections for track other than track located within Train Maintenance Facilities (TMFs) and MOW yards. Proposed paragraph (b)(2)(iii) specified that turn-outs and track crossings were to be inspected at least once a week, with a minimum of three calendar days between inspections. However, FRA inadvertently failed to distinguish between turn-outs and track crossing on ballasted track versus on non-ballasted track. In this final rule, FRA is making that distinction by clarifying that the requirements of § 299.345(b)(2)(iii) apply only to turn-outs and rail crossings on ballasted track. FRA has added new paragraph (b)(2)(iv) for non-ballasted track, which specifies that turn-outs and rail crossings on non-ballasted track shall have an on-track inspection conducted at least once every two weeks, with a minimum of six calendar days between inspections. This is consistent with the rule text in TCRR's petition.

Under § 299.345(b)(3), FRA inadvertently restricted the conduct of on-track inspections to ''during maintenance hours.'' Under § 299.301(b), track maintenance in MOW yards and TMFs is not restricted to maintenance hours, as it is for mainline track under § 299.301(a). As such, track inspections can be conducted under traffic conditions, so long as proper on-track safety is provided as required under 49 CFR part 214. Under § 299.3(c), TCRR must comply with 49 CFR part 214 for on-track safety, with the exception of § 214.339. Accordingly, in this final rule, FRA removed ''during maintenance hours'' from § 299.345(b)(3) and added new paragraph (b)(3)(iii) to make explicit the requirement that 49 CFR part 214 (with the exception of § 214.339) be followed for on-track safety within the TMFs and MOW yards when on-track inspections are performed under traffic conditions. Nothing in this discussion should be construed as affecting the general prohibition under § 299.301(a) of performing on-track maintenance or inspections of track, other than track in MOW yards and TMFs, under traffic conditions. In those locations, MOW work and revenue service must still be

[56] 5 U.S.C. 601 *et seq.*

[57] 67 FR 53461 (Aug. 16, 2002).

[58] 85 FR 14036, 14048.

[59] 85 FR 14036, 14046.

[60] 5 U.S.C. 553(b)(3)(A).

temporally separated, as discussed in the NRPM.[61]

Under proposed § 299.609(a), FRA inadvertently left out the word ''types'' after vehicle. In this final rule, FRA has added the word ''types'' to clarify the requirement, which is consistent with FRA practice regarding vehicle/track interaction qualification.

In addition to the above changes, FRA also made several minor technical changes. Under § 299.315(g), FRA removed an incorrect cross-reference to § 299.337 as the term ''vehicle type'' is not used in § 299.337. Under § 299.407(d), FRA changed ''emergency window exit'' to ''emergency egress window'' for consistency of term use. FRA made the same change for the same reason to § 299.427. Finally, under § 299.439(b), FRA fixed an incorrect reference to ''this paragraph'' and correctly changed the reference to ''paragraph (c) of this section.''

B. Evaluation of Substantive Changes

1. § 299.5 Definitions

In its comments, TCRR requested that FRA make some changes to the rule text to help remove ambiguity. Under § 299.5, TCRR requested that FRA amend the proposed definition of ''passenger equipment.'' In support of its request, TCRR stated that the proposed definition implied that TCRR's trainsets would be approved for use on JRC's Tokaido Shinkansen HSR system, which TCRR commented is not correct. While TCRR's trainset will be based on current or future variants of the N700 series trainset approved for use on the Tokaido Shinkansen HSR system, TCRR's trainset itself will not be approved for use on the Tokaido Shinkansen HSR system, as it has fewer passenger cars than what JRC runs. Accordingly, TCRR requested that FRA change the definition of ''passenger equipment'' to mean the N700 series trainset that is based on trainsets currently in service, or future variants operated on, JRC's Tokaido Shinkansen system, or any unit thereof. FRA agrees and has made the change in this final rule. To be clear, the term ''passenger equipment'' is referring to the N700 series passenger trainset that TCRR will operate on its system, which is based on the trainset in use presently, or future variants thereof, by JRC on the Tokaido Shinkansen HSR system. What is important is not whether the TCRR trainset has been approved for use on the Tokaido Shinkansen HSR system, but that it is based on that technology and complies with the requirements of this rule.

In addition, under § 299.5, TCRR requested that FRA amend the proposed definition of ''in passenger service/in revenue service.'' In support of its request, TCRR pointed to proposed § 299.13(a)(3), which discussed and defined the requirement for temporally separating scheduled ROW maintenance from revenue passenger operations. TCRR raised a concern in its comment that leaving a passenger trainset properly secured in a station overnight during MOW operations could run afoul of the temporal separation requirement. TCRR further explained that its understanding of the temporal separation requirement under § 299.13(a)(3), as proposed in the NPRM, is that the ROW must be cleared of all revenue service trainsets (including any trainset repositioning moves) in order to ensure trainsets cannot be moved into established maintenance zones. Moreover, TCRR stated that it would not consider a parked, properly secured trainset in a station location to be a revenue service trainset because it would not be actively carrying or available to carry passengers. TCRR further stated that a trainset could be considered available to carry passengers, and thus considered ''in passenger service/in revenue service'' only after receiving power from the overhead catenary system and receiving a pre-departure inspection by the driver. And, as overhead catenary power will be restored to the ROW only after it has been cleared of MOW equipment, with the general control center returning the signal and trainset control system to the state required to protect revenue operations, a trainset could not be considered ''in passenger service/in revenue service'' during MOW operations, thus accomplishing the temporal separation required by the rule. Accordingly, to codify this understanding, TCRR requested that FRA add to the definition of ''in passenger service/in revenue service'' a carve-out that a trainset that is parked and properly secured within a station overnight is not considered to be in revenue service, and thereby it does not need to be cleared from the ROW prior to MOW operations commencing.

The purpose of the temporal separation requirement is two-fold: (1) Protection of passengers in the high-speed trainsets from a collision with heavy MOW equipment; and (2) protection of the MOW employees performing work within the ROW from the risk of being struck by a high-speed trainset. In both situations, the risk involves a moving high-speed trainset. As discussed in the NPRM, removal of overhead catenary power to those sections of the ROW where MOW operations are occurring or planned to occur is a requirement,[62] and without overhead catenary power, a high-speed trainset is incapable of generating tractive power, so those two risks, a collision between a high-speed trainset carrying passengers and MOW equipment, and MOW employees being struck by a high-speed trainset, are heavily mitigated.

However, when looking at the requirements for temporal separation under § 299.13(a)(3), there is a requirement that the railroad must complete its trainset repositioning moves prior to the commencement of MOW operations. Trainset repositioning moves are not considered ''in passenger service/in revenue service,'' but rather considered ''in service,'' as that term was defined in the NPRM, as trainsets being repositioned would not necessarily be available to carry passengers. In addition, as scheduled MOW operations[63] occur outside of revenue service hours, FRA would expect trainsets to be loaded with passengers or available to carry passengers, and thus would not consider trainsets outside of revenue service hours to be ''in passenger service/in revenue service.'' But, they may be considered ''in service.''

Accordingly, FRA is adopting the proposed definition of ''in passenger service/in revenue service'' in this final rule unchanged. But, FRA is amending the definition of ''in service'' to include a fourth exception to address the situation where TCRR has a trainset parked in a station location that is properly secured and has been deemed not in service by the railroad (meaning TCRR is not intending on repositioning or otherwise moving the trainset until the cessation of MOW operations).

2. Subpart B—Signal and Trainset Control System

In its response to the NPRM, TCRR provided several comments and suggested edits with respect to FRA's proposed requirements for a PTC system, the certification process, and TCRR's interpretation of how those requirements should apply to its proposed use of the Tokaido

[61] 85 FR 14036, 14038 and 14043.

[62] 85 FR 14036, 14043.

[63] Unscheduled or emergency MOW operations during revenue service hours to repair a broken rail, for example, requires TCRR to halt revenue service over the affected portion of the right-of-way until the repair work is completed and has been inspected. *See* § 299.301(a) (prohibiting the restoration or renewal of track under traffic conditions that is located other than in TMFs and MOW yards).

Shinkansen ATC technology. FRA finds that many of these comments appear to originate from a misunderstanding of how the term ''system'' is used and what, exactly, FRA must certify under 49 U.S.C. 20157, Implementation of positive train control systems.

TCRR commented on § 299.201(c) and asserted that it does not anticipate the need for any regression testing[64] before FRA certifies TCRR's PTC system. In support of its assertion, TCRR stated that TCRR's system will be based on the service-proven Tokaido Shinkansen ATC system, and TCRR does not anticipate that any changes will be made to safety-critical software prior to obtaining PTC System Certification from FRA. Further, while TCRR does not believe regression testing would be necessary prior to its initial installation of ATC and FRA certification, TCRR does believe regression testing is appropriate for potential changes to its ATC technology that could possibly occur in the future.

As proposed in the NPRM, § 299.201(c) generally authorizes TCRR to conduct field testing of its uncertified PTC system and field regression testing of its FRA-certified PTC system, which could encompass, for example, future modifications to ATC functionality. As proposed, paragraph (c) was not intended to specify what type of tests are required in either instance. The exact tests to be performed are to be defined by the railroad in the development of its PTCSP, particularly with respect to the content requirements in § 299.207(a)(7), (a)(9), and (a)(10). TCRR must demonstrate that its PTC system, as built, fulfills the requirements contained in subpart B. The distinction that TCRR's proposed PTC system is based on a service-proven technology has no bearing in this instance. Under the statutory mandate, FRA must certify that a railroad's PTC system complies with the applicable PTC regulations (in this instance, 49 CFR part 299, subpart B), not the theoretical capability of the technology.[65] What constitutes safety-critical software has yet to be defined in detail by TCRR, as required under § 299.441, and the changes required to be made to the existing ATC software (whether on the executive or application side) have yet to be described.

As such, although the term ''regression testing'' in paragraph (c) is used in the context of post-certification field testing, this is not intended to suggest that this is the only circumstance that would call for regression testing, as several railroads have performed regression testing on an ongoing basis before and after obtaining PTC System Certification from FRA. FRA does not agree with TCRR's reading of § 299.201(c) as requiring regression testing; that paragraph merely authorizes TCRR to conduct various levels of field testing, including regression testing. FRA believes the necessary level of testing and validation should be determined as TCRR's system is developed and implemented, as required under § 299.207.

In its comments, TCRR also asserts that because it plans to use an existing signaling system, the requirement to include a ''description of the safety assurance concepts that are to be used for system development, including an explanation of the design principles and assumptions'' within TCRR's PTCSP (see § 299.207(a)(2)) should only apply only to modifications to its system. TCRR contends that because the system was developed long ago, these principles would not apply in the same manner as they would to a system that is under development. TCRR recommends that paragraph (a)(2) be modified to refer only to safety-critical changes to the ATC system, not the initial version of TCRR's ATC system. FRA disagrees with this perspective.

TCRR is correct that the core safety assurance concepts, design principles, and design assumptions are fundamental to the development of any new system, but they are also equally important in the implementation of existing technology. These core concepts, principles, and assumptions provide a baseline for safety assurance that govern the safe implementation of a system, whether proven or novel. In the case of TCRR, although the ATC system used on JRC's Tokaido Shinkansen HSR system was developed years ago, FRA would expect that the fundamental concepts (*e.g.,* fail safe), essential design principles, and any assumptions critical to the safety case of the system are understood by TCRR in a manner that can be articulated as part of its PTCSP. If TCRR cannot articulate these fundamental concepts, FRA would question how TCRR intends to ensure that the application and installation of the system in Texas is performed correctly. FRA acknowledges that JRC's Tokaido Shinkansen ATC technology has an extraordinary safety record, but TCRR must provide sufficient information in its PTCSP for FRA to certify that the ATC system in Texas fulfills the requirements under 49 CFR part 299, subpart B.

With respect to the requirement to include a complete description of TCRR's verification and validation process in its PTCSP, under § 299.207(a)(5), TCRR proposed that operational data from JRC's Tokaido Shinkansen HSR system would serve to adequately demonstrate that the technology and its functions, as conceived by JRC, have been successfully validated. FRA suspects that TCRR's interpretation comes from its perception that this requirement, and the corresponding requirement in 49 CFR 236.1015(d)(5), are intended for the validation and verification of a new system under development. FRA would like to make clear that a verification and validation process is essential to the implementation of any system, whether new or previously certified. The actual application of a technology is just as important as its theoretical performance. In this respect, even railroads that are implementing previously certified and type-approved PTC systems have substantial verification and validation processes and tests to ensure that the system, once installed, functions as designed and intended. Operational data from the existing JRC operation would not suffice in this case. As an example, a technology may be proven to effectively enforce civil speeds (*i.e.,* speed limits), but if the installation or application design is not correct, the cab signal code or track chart could allow for a maximum authorized speed that is not consistent with the safe civil speed required for a particular curve. Errors such as this are not uncommon when considering the volume of work that must be performed to install a system on hundreds (or thousands) of miles of track, and thus the verification and validation process is critical for the safe implementation of any train control system.

In its comments, TCRR further recommended changes to § 299.207(a)(18) to specifically reference the Tokaido Shinkansen system as being the baseline for comparison with TCRR's system. However, the modification is unnecessary for TCRR to reference the Tokaido Shinkansen as the baseline for comparison. As TCRR correctly identified, this requirement is derived from 49 CFR 236.1007(c)(1). FRA believes that, when possible, the RPA and the existing PTC requirements for high-speed service should be consistent. TCRR will be able to comply with § 299.207(a)(18), as the provision permits TCRR to use foreign service data in its PTCSP.

FRA is updating the language under § 299.209(e) to directly reference § 236.1029(h). The language of

[64] Regression testing is used to ensure that previously tested software still performs as intended after a change to that software.

[65] 49 U.S.C. 20157(h).

§ 299.209(e) as proposed in the NPRM was based on the language of § 236.1029(h), so the requirement to report has not changed. This is consistent with other sections under subpart B.

In addition, in its comments, TCRR acknowledges that proposed § 299.211 would establish certain security requirements for a PTC system utilizing wireless communications. Although TCRR does not currently intend for its ATC system to utilize wireless communications, TCRR comments that it does not object to retaining this provision in case it utilizes wireless communications in the future. Accordingly, FRA will retain the language under proposed § 299.211, as it mirrors the existing PTC requirements under § 236.1033.

3. § 299.345 Visual Inspections; Right-of-Way

Under § 299.345(b)(3)(i) and (ii), TCRR asked for the inspection frequency to be reduced from twice to once during the relevant period. As proposed, § 299.345(b)(3)(i) and (ii) require TCRR to inspect track within TMFs and MOW yards twice during a 60-day period for ballasted track and twice during a 120-day period for non-ballasted track. TCRR commented that although the rule language as proposed was consistent with the rule text provided with TCRR's petition, it is not wholly consistent with JRC practice. According to TCRR, JRC's practice is to inspect this type of track only once during the relevant periods (a 60-day period for ballasted track and a 120-day period for non-ballasted track). FRA recognizes that the language as proposed under § 299.345(b)(3)(i) and (ii) appears to contain requirements more stringent than what JRC requires on the Tokaido Shinkansen HSR system. Therefore, consistent with FRA and TCRR's goal to replicate JRC's requirements as closely as possible, FRA has made the requested change.

4. § 299.347 Special Inspections

TCRR requested in its comments that FRA amend the language of proposed § 299.347. As proposed, § 299.347 contains requirements for TCRR to conduct a special inspection of its track and ROW prior to the operation of a trainset in the event of fire, flood, severe storm, or temperature extremes that could damage the track structure. TCRR pointed out, though, that the language of proposed § 299.347 prohibits movement of a trainset, regardless of location in the ROW (*e.g.,* between stations), until an inspection has been performed. TCRR also stated that JRC has certain operating rules that would permit movement of a trainset to the next forward station location prior to an inspection so long as specific criteria were met. TCRR offered as an example if operations were suspended due to a heavy rainfall, defined by an amount of rain measured by that segment's rainfall gauge over a specific time interval preceding the trainset movement, a trainset would be allowed to move to the next station at a speed not to exceed 30 km/h (18.6 mph). Accordingly, TCRR requested that FRA amend the language of this section to require inspections of the track and ROW to be performed as soon as possible after the occurrence of a fire, flood, severe storm, temperature extremes, or other types of events that may cause damage to the track structure, in accordance with the railroad's inspection, testing, and maintenance program, and operating rules.

FRA agrees that an event may occur while a trainset is en route between stations that would halt the operation of the trainset prior to reaching the next station and trigger a special inspection, as proposed in the NPRM under § 299.347. Because of this, FRA has updated this section in the final rule. FRA has designated the previously undesignated text as paragraph (a) and added a new paragraph (b) to allow a trainset that is between stations to proceed to the next forward station at restricted speed, not to exceed 30 km/h (18.6 mph) after an event contemplated by this section occurs. This allows for the movement of passengers to a station so they are not stranded in the ROW until an inspection of the track and ROW can be performed. However, FRA makes clear that no trainset may depart a station location until a special inspection of the effected track and ROW can be performed. This new paragraph (b) is only to permit the movement of passengers to the next station that would otherwise be stranded between station locations. Should the track and/or ROW be discovered to be damaged so as to put the safety of the passengers in jeopardy, then the movement is expected to stop until the track is inspected by a qualified person, and the qualified person makes a determination that movement can safely proceed.

5. § 299.713 Program Approval Procedures

TCRR further requested that FRA amend the language of § 299.713(c)(2) as proposed in the NPRM. As proposed, § 299.713(c)(2) provided the procedures for approval of amendments to the inspection, testing, and maintenance program. Any amendment that relaxes an FRA-approved requirement will be reviewed by FRA within 45 days of receipt of the amendment, by which time FRA will notify TCRR whether the amendment is approved, or if not approved, stating the specific points in which the amendment is deficient. Crucial to this part of the paragraph was that the railroad could not implement the amendment until FRA had approved it. The proposed paragraph further stated that if the railroad wanted to amend the program by making an FRA-approved requirement more stringent, the railroad could implement the amendment prior to receiving FRA approval on the amendment.

Although TCRR generally accepted that the language would address many possible amendments, TCRR commented that there may be situations where it is unclear as to whether the proposed inspection, testing, and maintenance program amendment is making an FRA-approved requirement more stringent or relaxed. Thus, TCRR requested FRA change the language of proposed paragraph (c)(2), such that if the railroad proposes to amend an FRA-approved program requirement that TCRR deems to be more stringent, the railroad is permitted to act immediately to implement the amendment prior to obtaining FRA approval.

FRA is not adopting TCRR's recommendation because FRA finds the language to be sufficiently clear and expects that most situations, as TCRR has acknowledged, will be straightforward in their resolution. For example, if TCRR wishes to perform inspections more frequently than required in its inspection, testing, and maintenance program, FRA would consider TCRR's proposed action as more stringent than what is required. Conversely, if TCRR wishes to perform inspections less frequently than required in its inspection program, testing, and maintenance program, FRA would consider TCRR's proposed action as less stringent than what is required, and TCRR must have FRA approval before implementing the change. When there is a question as to whether TCRR's proposed action is making a requirement more stringent or relaxed, FRA would expect TCRR to either treat the action as relaxing, triggering FRA review, or to contact FRA to inquire.

C. Trainset Image Recording System

In the NPRM, FRA proposed to make applicable to TCRR the requirement to have an image recording system installed on its trainsets, consistent with FRA's Locomotive Image and Audio Recording Devices for Passenger Trains

NPRM.[66] As discussed in the TCRR NPRM, FRA stated that once the image recording device rulemaking was finalized, that FRA would make conforming changes to this final rule's regulatory text. However, as FRA has not yet published the image recording devices final rule, FRA will make any necessary changes to this regulation as part of that rulemaking.

D. Decision Under 49 U.S.C. 20306, Exemption for Technological Improvements

As discussed in the NPRM, FRA's safety appliance regulation is based on longstanding statutory requirements for individual railroad cars used in general service. These requirements are primarily intended to keep railroad employees safe while performing their essential job functions. Historically, these duties have revolved around the practice of building trains by switching individual cars or groups of cars, and are not directly applicable to how modern high-speed passenger equipment is designed and operated. The application of such appliances would require a significant redesign of HSR equipment, and would create aerodynamic problems, particularly with respect to associated noise emissions. In the NPRM, FRA proposed to exempt TCRR from statutory requirements that are not applicable or practical for inclusion on its high-speed trainset technology, pursuant to the authority granted under 49 U.S.C. 20306.[67]

Rather than apply legacy requirements that are inappropriate for the proposed equipment's design and service environment, this final rule focuses on how to provide a safe environment for crews as it pertains to the N700 series trainset, and modern high-speed operations throughout the world. In this respect, this final rule defines specific safety appliance performance requirements applicable to this semi-permanently coupled trainset. By focusing on the job functions this approach is expected to: Improve safety for crews and railroad employees; provide flexibility for superior designs based on modern ergonomics; and allow for elimination of appliances when their functionality is moot (*e.g.,* riding on side sill steps despite an inability to couple/decouple cars). FRA believes it is appropriate to grant relief under the discretionary process established under 49 U.S.C. 20306 and adopts these requirements under its statutory authority as part of this rulemaking.

As part of the hearing held on May 4, 2020, FRA conducted proceedings under 49 U.S.C. 20306 to determine whether to invoke its discretionary authority to provide relief to TCRR from certain requirements of 49 U.S.C. ch. 203 for its planned operation of high-speed trainsets built to the requirements contained in this final rule. Under 49 U.S.C. 20306, FRA may exempt TCRR from the above-identified statutory requirements based on evidence received and findings developed at a hearing demonstrating that the statutory requirements ''preclude the development or implementation of more efficient railroad transportation equipment or other transportation innovations under existing law.''

In its rulemaking petition, TCRR requested FRA exercise its discretionary authority under 49 U.S.C. 20306 to exempt its high-speed passenger rail trainsets from the requirements of 49 U.S.C. 20302, which mandates that railroad vehicles be equipped with: (1) Secure sill steps and efficient hand brakes; (2) secure grab irons or handholds on vehicle ends and sides for greater security to individuals coupling and uncoupling vehicles; and (3) the standard height of drawbars. *See* 49 U.S.C. 20302(a)(1)(B), (a)(2), and (a)(3). On May 14, 2020, FRA granted similar relief under 49 U.S.C. 20306 to exempt Amtrak's new high-speed passenger rail trainsets,[68] based on evidence presented at a public hearing held on December 11, 2019. TCRR also testified at this hearing in support of Amtrak's petition and noted its pending need for similar technological exemption. FRA notes no substantive differences in the justification for exemption between TCRR and Amtrak, as both requests pertain to the implementation of modern high-speed passenger rail trainsets. FRA believes its exemption for such technology under Amtrak's petition could be extended to any similar high-speed passenger rail trainset technology, but given the unique nature of this rulemaking, and the overlap in timing between TCRR's petition and FRA's decision to grant Amtrak's petition, FRA felt it was appropriate to conduct proceedings under 49 U.S.C. 20306 as part of the hearing held on May 4, 2020. By taking this approach, FRA could ensure transparency and provide ample opportunity for comment from those most affected by the TCRR proposal.

In support of its request for an exemption, TCRR noted in its petition that safety appliances such as sill steps, or end or side handholds, are typically used in conventional North American practice by maintenance personnel who ride the side of trainsets in yards or maintenance facilities for marshalling operations. The N700 series trainset, as described in this final rule, is a fixed-consist trainset where trainset make-up only occurs in defined locations where maintenance personnel can safely climb on, under, or between the equipment, consistent with the protections afforded under 49 CFR part 218.

In addition, the leading and trailing ends of the N700 series trainset are equipped with an automatic coupler located behind a removable shroud. These couplers, as proposed by TCRR, will only be used for rescue operations in accordance with TCRR's operating rules, and provide for the safe coupling of one trainset to another (*i.e.,* each end will have automatic self-centering couplers that couple to other trainsets on impact, and uncouple by mechanisms that do not require a person to go between trainsets or activate a traditional uncoupling lever). Further, as proposed, level boarding will be provided at all locations in trainset maintenance facilities where crew and maintenance personnel are normally required to access or disembark trainsets. Moreover, because the equipment is a fixed-consist trainset in which individual vehicles are semi-permanently coupled and, as noted above, individual vehicles can only be disconnected in repair facilities where personnel can work on, under, or between units under protections consistent with 49 CFR part 218, having drawbars at the statutorily prescribed height is unnecessary.

As such, there is not a functional need to equip the ends of the trainsets with sill steps, end or side handholds, or uncoupling levers. As this technology is intended to operate at high-speeds, the inclusion of these appurtenances would have a significant and detrimental impact on the aerodynamics of the trainset. This increase in the aerodynamic footprint would negatively impact both efficiency and aerodynamic noise emissions.

TCRR also noted that trainset securement will be provided by the use of wheel chocks in addition to stringent operating rules and procedures, which will be consistent with the service-proven procedures utilized on the Tokaido Shinkansen system. In addition, as proposed in the NPRM, TCRR will be required to demonstrate, as part of its vehicle qualification procedures, that the procedures

[66] 85 FR 14036, 14041; (84 FR 35712, Jul. 24, 2019).

[67] 85 FR 14036, 14040.

[68] *See* docket FRA–2019–0066.

effectively secure the trainset (see § 299.607).

In sum, TCRR asserted that requiring compliance with the identified statutory requirements would serve to preclude the development or implementation of more efficient railroad transportation equipment or other transportation innovations under existing law.

During the hearing conducted on May 4, 2020, TCRR provided testimony in support of its exemption request, which reiterated its position stated in its rulemaking petition, which is summarized below.[69]

TCRR testified that, with respect to couplers being able to couple automatically on impact and capable of being uncoupled without the necessity of an individual going between ends of vehicles, that the inter-car connections and coupling mechanisms on TCRR's trainsets are different than those envisioned by 49 U.S.C. 20302(a)(1)(A). TCRR explained that its trainsets can only be separated at a maintenance facility, as the separation of the trainset requires special tools and procedures to safety disconnect the inter-car mechanical and electrical connections. Separation at a maintenance facility also provides railroad employees needing to go between individual cars proper safety protection. Further, TCRR testified that its trainsets will be equipped with rescue couplers at each end of the trainset in the event a trainset needs to be rescued from the ROW. These rescue couplers are located within a removable shroud at each end of the train set, and are automatic couplers, in that they couple upon impact.

With respect to 49 U.S.C. 20302(a)(2), which requires secure grab irons or handholds on the ends and sides of vehicles for greater security for individuals involved with coupling and uncoupling vehicles, TCRR testified that these are not necessary due to the coupling arrangement of its trainset, described above. TCRR further testified that inclusion of these safety appliances would have a significant and detrimental impact on the aerodynamic performance of the trainset and significantly increase the aerodynamic noise generated from the trainset. TCRR stated that providing an exemption from these requirements is consistent with the treatment of similar equipment.

TCRR further testified with respect to 49 U.S.C. 20302(a)(3), which requires drawbars to be of a standard height as specified by FRA regulation, that TCRR will not conduct any type of joint operation with conventional freight or passenger equipment. Accordingly, as TCRR testified, there is no need to have couplers at a standard height, as TCRR's trainsets will have no need to couple to dissimilar equipment.

TCRR next testified with respect to 49 U.S.C. 20302(a)(1)(B), which requires vehicles to be equipped with secure sill steps and efficient handbrakes, that TCRR's trainset will not be equipped with a handbrake. TCRR further testified that its unattended trainsets will be secured through a combination of an urgent brake application, which is equivalent to an emergency brake application in the U.S., and the use of wheel chocks. According to TCRR's testimony, this is reflective of JRC's practice on the Tokaido Shinkansen system, which has a demonstrated safety record. TCRR also testified that its operating rules will also define securement procedures, which will be based on the service-proven procedures employed by JRC.

TCRR also testified that sill steps and vertical handholds are not necessary for railroad employees to access or disembark from its trainsets. TCRR offered that it will have provisions for high-level boarding at all locations (passenger stations and maintenance facilities) an employee could be expected to access or disembark a trainset.

As noted above, FRA received several comments regarding TCRR's request for exemption. Some comments concerned the effect that the lack of identified safety appliances would have on the ability for TCRR to separate a train in the event of an emergency, while other comments concerned the impact that the absence of said appliance would have to emergency egress and first responder access to the trainset. In both instances, while FRA deeply appreciates the commenters' concerns with respect to the efficacy of emergency response, assisting in emergency rescue access is not the purpose of the safety appliances in question, and in many ways, what TCRR has proposed exceeds common practice for emergency passenger egress and first responder rescue access within the U.S.

In addition, FRA would like to address the comments related to the separation of trains in an emergency. While semi-permanently coupled passenger equipment is virtually universal for high-speed operations, it is also very common throughout conventional passenger and freight operations throughout the U.S., most often seen in Multiple Unit (MU) trainset operations and articulated freight cars (*e.g.,* double-stack well car sets). It is not common practice to break a train apart as part of an emergency procedure. Rescue of an entire disabled trainset is the most common scenario, and TCRR will be equipping its lead units with rescue couplers and other appliances to allow for a disabled trainset to be towed, if necessary. If a train is disabled such that intermediate uncoupling would be required to move it, it would typically be more appropriate to evacuate the impaired train either to a safe location, or by cross-transfer to another trainset, pursuant to the railroad's emergency plans. FRA notes that it is not the intent of the safety appliance requirements to prevent the use of semi-permanently coupled or articulated rail vehicles, whether by statute or regulation. Rather, the purpose of these appliances is to ensure that railroad personnel are provided the means to perform their duties safely, particularly where coupling or switching are common place. Notably, while the absence of such practice reduces the operational flexibility afforded to the railroad, it also serves to reduce the hazards that railroad personnel are exposed to, which, in itself, is a worthwhile application of safe practice being proposed for TCRR.

Notwithstanding FRA's prior statements on this topic, FRA received several comments expressing concern over first responder access to a trainset that is not equipped with traditional safety appliances. As discussed previously, safety appliances are primarily for railroad employee protection. Other rescue access and emergency egress systems are relied on to facilitate the entry of first responders into a trainset, and evacuation of passengers off a trainset, such as rescue access/emergency egress windows and doors, and roof spots, to name a few. *See, generally,* subpart D—Rolling Stock. Although safety appliances, if present, may be used for rescue access and emergency egress, it is not the primary function of these appliances. In addition, the safety appliances that would typically be utilized to access a trainset are not required under statute, and in virtually all cases, are insufficient for emergency egress and access needs.

Safety appliances as not required to be part of the required emergency systems for passenger equipment. Generally, it is FRA's position that the safest location for a passenger during an emergency is within the trainset or passenger car. There are limited circumstances where an evacuation to an adjacent car would be necessary, and

[69] *See* 05.04.2020—TCRR Telephonic Hearing Transcript at page 17–30, *available at www.regulations.gov,* Docket No. FRA–2019–0068, Document ID: 2019–0068–0291.

only in a life-threatening scenario is passenger self-evacuation off a train necessary. In addition, FRA also generally assumes that first responders will have certain equipment with them when responding to an emergency involving a train, to include ladders, axes, portable jaws-of-life, and other access-gaining tools. Furthermore, TCRR's proposal includes the use of deployable ladders with handrails to facilitate egress and access from the trainset to ground level in the event of an emergency or other appropriate situation. The use of such on-board ladders, while not required by this regulation, provide a superior means to get on or off the trainset in such scenarios than any traditional safety appliance, particularly for first responders. Further, not all emergencies require an immediate stopping of the trainset, as it may be more efficient to meet first responders at a dedicated location (such as a station location, or a location where access has been specifically planned for) to permit easier access to the trainset. Understandably, FRA is also aware that there may be emergency situations that will not permit continued travel along the ROW, such as a derailment of the equipment.

FRA also received a comment from Delta Troy challenging the legality of virtual hearings to satisfy the hearing requirement of 49 U.S.C. 20306.[70] In its comment, Delta Troy argued that virtual hearings are not an adequate or sufficient replacement for the value of a public hearing during notice-and-comment rulemaking, in addition to the statutory requirement that findings under 49 U.S.C. 20306 be based on evidence developed ''at a hearing.'' In support of its position, Delta Troy stated that conducting a virtual hearing would necessarily limit and truncate public engagement and discourse. And that ''untold members of the public'' would be precluded from participation because they lack adequate internet access, whether due to financial, technological, or other reasons. In conclusion, Delta Troy stated that a virtual hearing would not meet the requirements of 49 U.S.C. 20306, nor would it comport with ''the spirit of public comment'' as described in the APA. FRA disagrees and notes that 49 U.S.C. 20306 is silent as to the manner in which hearings may be conducted. As discussed under section III. Proceedings to Date, the telephonic hearings that FRA conducted represented only a change in the way information was exchanged. Further, the change to a telephonic hearing was made specifically to address the internet reliability concerns raised by Delta Troy and other commenters.

Based on the evidence developed at the hearing, including supporting information provided in TCRR's rulemaking petition, FRA is providing TCRR with its requested relief, as not doing so would preclude the development or implementation of more efficient railroad transportation equipment. FRA makes clear, though, that this relief will be in effect for high-speed trainsets, used only on TCRR's system, for the life of each variation put into service. If the equipment is sold or transferred to any other entity in the U.S., that entity would have to request its own relief under 49 U.S.C. 20306.

E. Incorporation by Reference

FRA is incorporating by reference six Japanese Industrial Standards (JIS) and three ASTM International (ASTM) standards. As required by 1 CFR 51.5, FRA has summarized the standards it is incorporating by reference and has shown the reasonable availability of those standards here. The Japanese Industrial Standards are reasonably available to all interested parties online at *www.jsa.or.jp* (Japanese site), or *www.jsa.or.jp/en* (English site). In addition, the ASTM standards are reasonably available to all interested parties online at *www.astm.org*.

In § 299.13(d)(4) and (5), FRA incorporates by reference three versions of JIS E 1101, ''Flat bottom railway rails and special rails for switches and crossings of non-treated steel.'' JIS E 1101:2001 addresses the manufacturing of the steel rail. It specifies the quality and tests for flat bottom railway rails of non-treated steel, with a calculated mass of 30 kg/m or more, and special rails for those railway switches and crossings. JIS E 1101:2006 and JIS E 1101:2012 amend JIS E 1101:2001 by updating references to other cited standards (*e.g.,* updating the title to the cited reference), updating references to specific clauses within a cited standard, or by deleting a reference to a cited standard. By incorporating these standards by reference, TCRR will be required to use rail that is manufactured to the same specifications as the rail used on the Tokaido Shinkansen system, which will help ensure that the rail side of the wheel-rail interface remains identical to that used on the service-proven high-speed lines of JRC.

Under § 299.403(b), FRA incorporates by reference two versions of JIS E 7105 ''Rolling Stock—Test methods of static load for body structures.'' JIS E 7105:2006 addresses test methods for trainset carbodies. It specifies the test methods of static load for confirming strength, rigidity, and the like of body structures for passenger stock, such as electric railcars, internal combustion railcars, and passenger cars, principally. JIS E 7105:2011 amends JIS E 7105:2006 by updating references to other cited standards (*e.g.,* updating the title to the cited reference), updating references to specific clauses within a cited standard, or by updating specifications from the 2006 version. By incorporating these standards by reference, FRA will maintain the same strength and rigidity of TCRR's trainset carbody structure. This will help preserve the occupied volume from premature degradation due to typical in-service loads and vibration.

Under § 299.409(g), FRA incorporates by reference JIS B 8265:2010 ''Construction of pressure vessels general principles.'' JIS B 8265:2010 addresses manufacturing of pressure vessels and specifies certain requirements for the construction and fixtures of pressure vessels with the design pressure of less than 30 MPa. By incorporating this standard by reference, FRA will ensure that the pressurized air reservoirs used in TCRR's trainset are designed and constructed to the same service-proven standard as used in the N700 trainsets currently operated on the Tokaido Shinkansen system.

Under § 299.423(e)(1) and (f)(3), FRA incorporates by reference ASTM D 4956–07$^{\varepsilon 1}$ ''Standard Specification for Retroreflective Sheeting for Traffic Control,'' approved March 15, 2007. ASTM D 4956–07$^{\varepsilon 1}$ covers flexible, nonexposed glass bead lens and microprismatic, retroreflective sheeting designed for use on traffic control signs, delineators, barricades, and other devices.

Under § 299.423(e)(1), FRA incorporates by reference ASTM E 810–03 ''Standard Test Method for Coefficient of Retroreflection of Retroreflective Sheeting Utilizing the Coplanar Geometry,'' approved February 10, 2003. Test method ASTM E 810–03 describes an instrument measurement of the retroreflective performance of retroreflective sheeting. Under § 299.423(e)(2), FRA incorporates by reference ASTM E 2073–07 ''Standard Test Method for Photopic Luminance of Photoluminescent (Phosphorescent) Markings,'' approved July 1, 2007. FRA also incorporates by reference Section 5.2 of ASTM E 2073–07 under § 299.423(e)(2) and § 299.423(e)(2)(ii). Test method ASTM E 2073–07 covers a procedure for determining the photopic luminance of photoluminescent (phosphorescent) markings. It does not cover scotopic or mesopic measurements. Incorporation

[70] *See* FRA Docket No. FRA–2019–0068, Document ID: FRA–2019–0068–0039.

of the three ASTM standards by reference is to ensure that the materials used for interior and exterior emergency markings can provide adequate photoluminescence or retroreflectivity. As the markings utilizing these materials will be relied on during emergencies (either for passenger egress or first responder access), it is important that the marking can be easily identified and followed should the emergency occur during hours of limited visibility, with possible degradation or complete loss of interior lighting. The standards either provide performance specifications for design and manufacture, or provide the testing methods.

VI. FRA's Record of Decision

This final rule constitutes the Record of Decision (ROD) for FRA's publication of an RPA, pursuant to NEPA and the NEPA implementing regulations from the Council on Environmental Quality (CEQ).[71] In making its decision to proceed with the RPA, FRA considered the information and analysis included in the Draft and Final EIS, public and agency comments submitted on the Draft and Final EIS for Dallas to Houston High-Speed Rail, technical supporting information, and public and agency comments submitted on the NPRM.

As required by CEQ regulations,[72] in addition to the Agency's decision, this final rule and ROD sets forth a summary of the alternatives considered by FRA in reaching its decision, including the environmentally preferable alternative, and identifies the mitigation measures to be implemented.

A. Summary of Alternatives Considered

TCRR identified its intent to construct and operate a high-speed rail system between Dallas and Houston in its rulemaking petition. Therefore, while FRA's decision is whether to publish an RPA (or take other regulatory action necessary for the implementation of the Tokaido Shinkansen technology within the U.S.), FRA also identified and evaluated six end-to-end Build Alternatives in the Draft and Final EIS to understand the potential impacts that could result if FRA publishes the RPA and TCRR advances the proposed Dallas to Houston project.

To identify the six end-to-end Build Alternatives evaluated in the Draft and Final EIS, FRA completed a two-step alternatives development process. Section 2.4, Alternatives Considered, Development and Evaluation of Proposed Corridors of the Final EIS, summarizes the process FRA undertook to identify four corridor alternatives. The *Dallas to Houston High-Speed Rail Project, Corridor Alternatives Analysis Technical Report,* which describes the corridor analysis in detail, is available on FRA's website.[73]

Section 2.5, Alternatives Considered, Development and Evaluation of Initial Alignment, Station and TMF Alternatives of the Final EIS, details the process that FRA undertook to identify the six build alternatives that were evaluated in the Draft and Final EIS. The complete analysis of alignment alternatives is described in the *Dallas to Houston High Speed Rail Project, Alignment Alternatives Analysis Report,* also available on FRA's website.

1. No Build Alternative

As required by NEPA, the Final EIS included the No Build Alternative, also known as the alternative of no action, in its analysis as the baseline for comparison with Build Alternatives A through F and the three Houston Terminal Station Options. Under the No Build Alternative, FRA would not publish an RPA or take other regulatory action necessary for the implementation of the Tokaido Shinkansen technology within the U.S.; therefore, TCRR would not construct nor be able to operate the HSR system and associated facilities. Travel between Dallas and Houston would continue via existing highway (IH–45) and airport (Dallas Fort Worth International Airport [DFW], Dallas Love Field Airport [DAL], George Bush Intercontinental Airport [IAH] and William P. Hobby Airport [HOU]) infrastructure. *See* Section 2.61, Alternatives Considered, No Build Alternative of the Final EIS for a full description of the No Build Alternative.

2. Build Alternatives

The two-step alternatives development process resulted in the six end-to-end Build Alternatives, A through F, considered in the Draft and Final EIS. For analytical purposes, each alternative was divided into segments, as depicted on Figure 2–28 of the Final EIS.[74] Table 1 identifies the segments that create each Build Alternative. In addition to the track alignments, the limits of disturbance evaluated for each Build Alternative contains the infrastructure necessary to support HSR operations including stations, TMFs, MOW Facilities, signaling and communications infrastructure, Traction Power Substations (TPSS), sectioning posts, and sub-sectioning posts. *See* Section 2.6.2, Alternatives Considered, Build Alternatives of the Final EIS for complete descriptions of the alternatives and associated infrastructure.

The Final EIS analyzed the three stations proposed by TCRR, the Dallas Terminal Station, Brazos Valley Intermediate Station in Grimes County, and the Houston Terminal Station (which included three station location options in Houston). Stations and platforms would be designed to accommodate planned future operations. Two TMFs would be located near the terminal stations to serve as cleaning and maintenance facilities for the HSR trainsets. Each would occupy approximately 100 acres and include sidings for trainset storage, trainset car washes and other facilities. Seven MOW facilities would be located every 15 to 46 miles along the HSR ROW. Each MOW facility would be approximately 35 acres and have sidings for MOW equipment and sweeper vehicles. Signaling and communications infrastructure would typically be between 0.1 and 0.3 acre and spaced no more than 25 miles apart along the alignment. Radio towers approximately 50 feet tall would be spaced at approximately 6-mile intervals. Approximately 14 TPSSs, including 2 at the TMFs, would be spaced between 10 and 25 miles apart, generally adjacent to or within 1 mile of existing 138 kV transmission line. The TPSSs would have a footprint of approximately 6 acres with a substation building of approximately 2,200 square feet. An anticipated 11 sectioning posts and nine sub-sectioning posts would be placed between the TPSSs. Each would have a footprint of approximately one half to one acre each, with a small electrical building (approximately 1,600 square feet).

TABLE 1—BUILD ALTERNATIVES A THROUGH F

Build alternative	Segment
Alternative A	1, 2A, 3A, 4, 5.
Alternative B	1, 2A, 3B, 4, 5.
Alternative C	1, 2A, 3C, 5.
Alternative D	1, 2B, 3A, 4, 5.
Alternative E	1, 2B, 3B, 4, 5.
Alternative F	1, 2B, 3C, 5.

[71] 40 CFR 1500–1508.

[72] 40 CFR 1505.2.

[73] FRA. *Dallas to Houston High-Speed Rail—Passenger Service from Houston to Dallashttps://railroads.dot.gov/environmental-reviews/dallas-houston-high-speed-rail/dallas-houston-high-speed-rail-passenger.*

[74] FRA. *Dallas to Houston High-Speed Rail—Passenger Service from Houston to Dallas https://railroads.dot.gov/environmental-reviews/dallas-houston-high-speed-rail/dallas-houston-high-speed-rail-passenger,* Final Environmental Impact Statement.

Segment 1 is located in Dallas County and is common to all Build Alternatives. The segment is approximately 18-miles and includes the Dallas Terminal Station, Dallas TMF and a TPSS. Segment 2A, located in Ellis County beginning about 1.5 miles south of the Ellis County Line, is approximately 23 miles in length. Segment 2A includes one MOW facility and one TPSS. Segment 2B is also located in Ellis County and is approximately 23 miles in length. Segment 2B includes one MOW facility and one TPSS. Segment 3A is located in Ellis and Navarro counties. It is approximately 30 miles in length and includes one siding-off track and two TPSSs. Segment 3B is also located in Ellis and Navarro counties and is approximately 31 miles in length. Segment 3B includes one siding off track and one TPSS. Segment 3C, approximately 113 miles long, is located in Navarro, Freestone, Leon, Madison and Grimes counties. Segment 3C includes two MOW facilities, one siding off track and six TPSSs. Segment 4 is located in Freestone, Limestone, Leon, Madison and Grimes counties. It is approximately 80 miles in length and includes two MOW facilities, two siding off tracks and four TPSSs. Segment 5, at approximately 84 miles, is common to all Build Alternatives. It is located in Grimes, Waller and Harris counties. Segment 5 includes the Brazos Valley Intermediate Station, one TMF, two MOW facilities, one siding off track and four TPSSs.

In addition, as detailed in Section 2.5.2.3, Alternatives Considered, Houston Terminal Station Options of the Final EIS, three terminal station options, including the Industrial Site, Northwest Mall and Northwest Transit Center were considered for the Houston Terminal Station located in northwest Houston within the vicinity of US 290, IH–10 and IH–610 north of Post Oak Road, west of IH–610 and just north of Hempstead Road.

B. Environmentally Preferable Alternative

The environmentally preferable alternative is the alternative that is least damaging to the environment or that best protects, preserves, and enhances historic, cultural, and natural resources.[75] After considering the comparative analysis of the potential impacts of the No Build Alternative, Build Alternatives A–F, and the three Houston Terminal Station options presented in the Final EIS, FRA finds that Build Alternative A (comprised of Segments 1, 2A, 3A, 4, and 5) and the Houston Northwest Mall Terminal Station Option, which were identified as the Preferred Alternative in the Final EIS, are the environmentally preferable alternatives that provide the best balance to transportation goals while minimizing physical impacts to the built and natural environment.[76]

1. Environmentally Preferable Build Alternative

For many resource areas, there are no distinguishable differences in impacts among Build Alternatives A–F.[77] When the environmental impacts of Build Alternatives A–F are compared, Build Alternative A would have the overall fewest permanent impacts to the socioeconomic, natural, physical, and cultural resources environment, including generally fewer permanent acquisitions and displacements, and impacts to transportation, floodplains, and waters of the U.S.

In addition, Segment 2B, a component of Build Alternatives D, E, and F, would cross U.S. Army Corps of Engineers (USACE) fee land. Coordination with USACE identified that the USACE National Non-Recreation Outgrant Policy would prevent USACE from carrying forward Segment 2B in the USACE evaluation criteria, as there is a viable alternative not on federal property. Environmental resources that differentiate Build Alternatives A, B, and C are presented in Table 2.

TABLE 2—COMPARISON OF BUILD ALTERNATIVES A, B AND C[78]

Evaluation criteria	Measure	Alt A	Alt B	Alt C
Water Quality (Section 3.3)				
Impaired Waterbodies—303(d) List	Feet	344.7	517.4	496
Impaired Waterbodies Total	Feet	830.0	1,002.7	981.3
Groundwater Wells	Count	9	13	7
Noise and Vibration (Section 3.4)				
Severe Noise Impact:				
Residential	Count	10	12	10
Moderate Noise Impact:				
Residential	Count	280	290	275
Hazardous Materials and Solid Waste (Section 3.5)				
Low-Risk Hazardous Material Sites	Count	297	298	326

[75] CEQ's Forty Most Asked Questions Concerning CEQ's National Environmental Policy Act Regulations, 46 FR 18026 (Mar. 23, 1981, as amended 1986).

[76] *See* Section 2.7, Alternatives Considered, Preferred Alternative of the Final EIS for a more detailed comparison of the potential environmental impacts that differentiate the Build Alternatives and Houston Terminal Station Options.

[77] Including air quality, elderly and handicapped, socioeconomic, electromagnetic field, environmental justice, vibration, aesthetics and visual, and greenhouse gas emissions.

[78] Specific impacts are not included in this comparison table if they are equal across Build Alternatives A, B and C. Section references within this table are to sections of the Final EIS.

[79] Threatened and Endangered Species acreages include habitat for species with mapped habitat that may be impacted, including the Houston toad, large-fruited sand verbena, and Navasota ladies'-tresses. Threatened and endangered species in the Study Area that may be impacted, but that do not have mapped habitat, include the interior least tern and the whooping crane.

[80] Road modifications reflect the number of reroutes, road adjustments, or road over rail constructions that would occur. Some roads are affected by multiple modifications (such as IH–45). Modifications do not reflect total number of roads, but total number of road construction sites.

[81] Shared access roads are included in roadway modification lengths. Shared access roads will be developed to provide for maintenance, emergency response access, and private property access with a corresponding reduction in the number of new public roads to decrease burden on roadway authorities. Shared access roads would be constructed and maintained by TCRR.

[82] Anxiety Aerodrome would be directly impacted by Segment 3B, which is part of Alternatives B and E. Indirect impacts to special status farmland in Section 3.13, Land Use of the Final EIS are defined as a 25-foot setback added to the LOD to account for indirect loss of productive farmland to accommodate the use of farm and ranch equipment or impacts such as induced wind and changes in irrigation.

TABLE 2—COMPARISON OF BUILD ALTERNATIVES A, B AND C [78]—Continued

Evaluation criteria	Measure	Alt A	Alt B	Alt C
Moderate-Risk Hazardous Material Sites	Count	155	155	165
Natural Ecological Systems and Protected Species (Section 3.6) [79]				
Protected Species Modeled Habitat—Temporary	Acres	328	328	325
Protected Species Modeled Habitat—Permanent	Acres	1,058	1,058	1,452
Waters of the U.S. (Section 3.7)				
Stream Crossings—Temporary	Feet	83,459	83,791	90,942
Stream Crossings—Permanent	Feet	38,898	45,631	35,096
Wetlands—Temporary	Acres	59.5	59.0	44.3
Wetlands—Permanent	Acres	50.0	47.4	63.4
Waterbodies—Temporary	Acres	33.5	36.3	30.4
Waterbodies—Permanent	Acres	27.6	27.2	21.1
Floodplains (Section 3.8)				
Impacts to 100-Year Floodplain	Acres	616	557	642
Impacts to 500-Year Floodplain	Acres	132	132	133
Permanent Impacts to 100-Year and 500-Year Floodplains	Acres	529	479	579
Temporary Impacts to 100-Year and 500-Year Floodplains	Acres	219	210	196
Total Acres of Impacted Floodplain	Acres	748	689	775
Total Number of Bridge/Viaduct Crossings of FEMA Zone AE	Count	63	63	71
Total Number of Bridge/Viaduct Crossings of FEMA Zone A	Count	126	142	137
Utilities and Energy (Section 3.9)				
New Electric TPSS Connections	Count	13	12	13
Electric Utility Pole Adjustments	Count	85	85	74
Total Electric Connections and Adjustment	Count	98	97	87
Abandoned Oil and Gas Wells	Count	37	37	22
Aesthetics and Scenic Resources (Section 3.10)				
Total Number of Adverse Visual Resource Impacts	Count	11	11	10
Transportation (Section 3.11)				
Road Modifications [80] (*Public and Private*)	Count	138	150	102
Road Modifications [81] (*Public only*)	Count	59	66	79
Length added to Public Roads (miles)	Miles	16.8	21.4	46.9
Length removed from Public Roads (miles)	Miles	5.1	5.0	27.2
Impacts to airports [82]	Count	0	1	0
Land Use (Section 3.13)				
LU Conversion—Temporary	Acres	2,553.4	2,532.9	2,393.2
LU Conversion—Permanent	Acres	6,619.8	6,814.0	7,295.6
Special Status Farmland—Temporary	Acres	1,710.8	1,690.4	1,459.8
Special Status Farmland—Permanent	Acres	3,534.5	3,764.3	3,573.4
Special Status Farmland—Indirect [5]	Acres	847.5	888.2	697.3
Displacement—Commercial (primary)	Count	42	42	65
Displacement—Residence (primary)	Count	235	255	239
Displacement—Community Facilities (primary)	Count	2	2	3
Estimated Permanent Parcel Acquisitions	Count	1,731	1,814	1,789
Estimated Temporary Parcel Acquisitions	Count	272	277	259
Estimated Structure Acquisitions—Agriculture	Count	196	223	196
Estimated Structure Acquisitions—Commercial	Count	12	12	18
Estimated Structure Acquisitions—Cultural/Civic Resources	Count	2	2	1
Estimated Structure Acquisitions—Oil and Gas	Count	12	12	17
Estimated Structure Acquisitions—Residence	Count	49	50	51
Estimated Structure Acquisitions—Transportation and Utilities	Count	0	0	1
Safety and Security (Section 3.16)				
Permanent Road Modifications resulting in 1 minute or more in additional through travel time.	Count	12	13	9
Total fire and EMS service areas bisected by construction	Count	56	57	51
Fire and EMS providers with high potential for construction effects	Count	3	4	5
Fire and EMS providers with localized potential for construction effects	Count	8	7	6

TABLE 2—COMPARISON OF BUILD ALTERNATIVES A, B AND C [78]—Continued

Evaluation criteria	Measure	Alt A	Alt B	Alt C
Recreational Facilities (Section 3.17)				
Parks	Count	0	0	1
Environmental Justice (Section 3.18)				
Number of Minority and/or Low-Income block groups intersected by the Study Area.	Count	80	80	81
Number of all block groups intersected by the Study Area	Count	118	118	119
Cultural Resources (Section 3.19)				
Adverse Impacts to Historic Properties	Count	14	14	13
Soils and Geology (Section 3.20)				
LOD Area	Acres	9,173.4	9,347.1	9,689.0
Shrink-Swell Potential—Low	Acres	2,593.6	2,585.8	2,848.3
Shrink-Swell Potential—Moderate	Acres	1,458.4	1,465.1	1,485.0
Shrink-Swell Potential—High	Acres	2,284.0	2,477.1	2,471.2
Shrink-Swell Potential—Very High	Acres	2,727.9	2,697.5	2,781.8
Erosion Potential—Low	Acres	1,611.6	1,591.3	1,914.1
Erosion Potential—Moderate	Acres	4,511.2	4,619.9	4,786.6
Erosion Potential—High	Acres	2,963.5	3,036.8	2,907.9
Corrosion Potential—Low	Acres	55.3	71.8	81.4
Corrosion Potential—Moderate	Acres	2,204.8	2,182.0	2,761.1
Corrosion Potential—High	Acres	6,824.5	6,992.5	6,764.5
Prime Farmland Soils	Acres	5,245.3	5,454.7	5,033.2

Source: AECOM, 2019.

2. Environmentally Preferable Houston Station Option

Like the Build Alternatives, for most resource areas, there are no distinguishable differences among the Houston Terminal Station Options. When the environmental impacts of each station option are compared, the Houston Industrial Site Terminal Station Option would have fewer permanent impacts to the socioeconomic, natural, physical, and cultural resources environment. However, the Houston Industrial Site Terminal Station Option would require the use of a resource protected by Section 4(f) of the Department Transportation Act,[83] which the other Houston Terminal Station Options would not.[84] Because of the special consideration given to resources protected under Section 4(f), FRA finds that the Houston Industrial Site Terminal Station Option is not environmentally preferable.

When the environmental impacts of Houston Northwest Mall Terminal Station Option and Northwest Transit Center Terminal Station Option are compared, the Houston Northwest Mall Terminal Station Option would have fewer permanent impacts to the socioeconomic, natural, physical, and cultural resources environment, as shown in Table 3.

TABLE 3—COMPARISON OF HOUSTON NORTHWEST TRANSIT CENTER TERMINAL STATION OPTIONS AND HOUSTON NORTHWEST MALL TERMINAL STATION OPTION [85]

Evaluation criteria	Measure	Northwest Transit Center	Northwest Mall
Hazardous Materials and Solid Waste (Section 3.5)			
Low-Risk Hazardous Material Sites	Count	6	0
Moderate-Risk Hazardous Material Sites	Count	8	3
High-Risk Hazardous Material Sites	Count	0	0
Waters of the U.S. (Section 3.7)			
Wetlands—Temporary	Acres	1.6	0.0
Waterbodies—Temporary	Acres	0.10	0.0
Transportation (Section 3.11)			
Intersections at LOS E or F	Count	22	24

[83] 49 U.S.C. 303.

[84] *See* Chapter 7.0, Section 4(f) and Section 6(f) Evaluation, of the Final EIS.

[85] Section references within this table are to sections of the Final EIS.

TABLE 3—COMPARISON OF HOUSTON NORTHWEST TRANSIT CENTER TERMINAL STATION OPTIONS AND HOUSTON NORTHWEST MALL TERMINAL STATION OPTION [85]—Continued

Evaluation criteria	Measure	Northwest Transit Center	Northwest Mall
Land Use (Section 3.13)			
LU Conversion—Temporary	Acres	11.8	27.4
LU Conversion—Permanent	Acres	88.7	75.8
Displacement—Commercial (primary)	Count	15	22
Displacement—Community Facility (primary)	Count	1	0
Estimated Permanent Parcel Acquisitions	Count	43	40
Estimated Temporary Parcel Acquisitions	Count	0	1
Estimated Structure Acquisitions—Commercial	Count	0	1
Socioeconomics and Community Facilities (Section 3.14)			
Community Facility	Count	1	0
Cultural Resources (Section 3.19)			
Adverse Impacts to Historic Properties	Count	1	0

Source: AECOM 2019.

C. Mitigation Commitments

FRA identified compliance and mitigation measures based upon identification of best practices and technical consideration of the likely success in implementation, Agency consultations, comments on the Draft and Final EIS, regulatory requirements, and input from TCRR. These mitigation commitments would avoid, minimize, mitigate, or compensate for the potential adverse impacts related to the construction and/or operation of TCRR's proposed Dallas to Houston project.

TCRR has agreed to implement the compliance and mitigation measures identified in the Dallas to Houston High-Speed Rail Mitigation Commitments, which is located on FRA's website.[86] The compliance and mitigation measures were also included in the Final EIS. In addition, TCRR is responsible for adhering to applicable Federal, State, and local laws, ordinances and requirements. TCRR has agreed to maintain an environmental compliance system to serve as a database of compliance and mitigation commitments and provide accountability and transparency to environmental regulatory agencies. TCRR will also prepare a quarterly report that summarizes the status of implementing compliance and mitigation measures by geographic area, mitigation activities completed, significant upcoming activities, and any corrective actions taken for any instances of non-compliance. TCRR will make the quarterly report available to the public by posting it on the TCRR website.

VII. Regulatory Impact and Notices

A. Executive Orders 12866 and 13771, and DOT Regulatory Policies and Procedures

The TCRR high-speed system is modeled on JRC's Tokaido Shinkansen HSR system, which does not meet many of the requirements under the Passenger Equipment Safety Standards (Tier III) final rule.[87] TCRR desires to maintain the safety record of the Tokaido Shinkansen HSR system, so it is imperative that the systems approach to safety and the philosophy of the JRC system be implemented in the United States. As such, TCRR is requesting, through this rulemaking, that it comply with regulations that are different, and in some instances, more stringent than the Tier III requirements.

FRA has a regulatory program that addresses equipment, track, operating practices, and human factors in the existing, conventional railroad environment. However, significant operational and equipment differences exist between the system contemplated by TCRR and other passenger operations in the United States. In many of the railroad safety disciplines, FRA's existing regulations do not address the operational characteristics of TCRR's system. Therefore, to ensure that this new system will operate safely, minimum Federal safety standards must be in place when TCRR commences operations.

Through this final rule, FRA will regulate the TCRR system as a standalone system. FRA stated in the Tier III final rule that a standalone system would have to combine all aspects of railroad safety (such as operating practices, signal and train control, and track) that must be applied to the individual system. Such an approach covers more than passenger equipment and would likely necessitate particular ROW intrusion protection and other safety requirements not adequately addressed in FRA's regulations. Without this final rule, TCRR would not be allowed to implement its system as it does not meet many of the requirements of FRA's existing regulations of general applicability. Accordingly, by enabling private activity that would otherwise be prohibited, this final rule is an E.O. 13771 deregulatory action.

E.O. 12866 requires agencies to account for additional regulatory burdens that a particular regulatory action would have on a regulated entity. In the rulemaking context, under E.O. 12866, two similar forms of regulatory action (*e.g.,* a rulemaking versus a waiver process) could have substantially different burdens on a regulated entity. For this reason, the methodology used to evaluate burdens of a particular regulatory action on a regulated entity under E.O. 12866 will differ from the methodology used under NEPA to assess the potential environmental impacts that may result from the regulatory action. For more information regarding the NEPA process, please see section VII. F. National Environmental

[86] FRA. *Dallas to Houston High-Speed Rail—Passenger Service from Houston to Dallas https://railroads.dot.gov/environmental-reviews/dallas-houston-high-speed-rail/dallas-houston-high-speed-rail-passenger,* Record of Decision Attachments, Mitigation Commitments.

[87] 83 FR 59182 (Nov. 21, 2018).

Policy Act, or the Final EIS which has been included in the rulemaking docket (Docket No. FRA–2019–0068, Final Environmental Impact Statement).

This final rule though, as an RPA, was not subject to review under E.O. 12866, as that applies only to rules of general applicability. Accordingly, FRA concluded that because this final rule generally includes only voluntary actions or alternative actions that would be voluntary, the final rule does not impart additional burdens on regulated entities, specifically TCRR. Even though not subject to E.O. 12866 review, FRA has provided a qualitative discussion on the costs, benefits, and alternatives considered, which can be found under section V. A. Executive Orders 12866 and 13771, and DOT Regulatory Policies and Procedures of the NPRM.[88] Responses to comments on FRA's regulatory evaluation are under section IV. M. Regulatory Evaluation of this final rule.

B. Regulatory Flexibility Act and Executive Order 13272; Regulatory Flexibility Assessment

The Regulatory Flexibility Act of 1980[89] and E.O. 13272[90] require agency review of proposed and final rules to assess their impacts on small entities. An agency must prepare a Final Regulatory Flexibility Analysis unless it determines and certifies that a rule, if promulgated, would not have a significant economic impact on a substantial number of small entities.

''Small entity'' is defined in 5 U.S.C. 601 as a small business concern that is independently owned and operated, and is not dominant in its field of operation. The SBA has authority to regulate issues related to small businesses, and stipulates in its size standards that a ''small entity'' in the railroad industry is a for profit ''line-haul railroad'' that has fewer than 1,500 employees, a ''short line railroad'' with fewer than 500 employees, or a ''commuter rail system'' with annual receipts of less than seven million dollars.[91] In addition, section 601(5) of the Small Business Act defines ''small entities'' as governments of cities, counties, towns, townships, villages, school districts, or special districts with populations less than 50,000 that operate railroads. Federal agencies may adopt their own size standards for small entities in consultation with SBA and in conjunction with public comment. Thus, in consultation with SBA, FRA has published a final statement of agency policy that formally establishes ''small entities'' or ''small businesses'' as railroads, contractors, and shippers that meet the revenue requirements of a Class III railroad—$20 million or less in inflation-adjusted annual revenue—and commuter railroads or small government jurisdictions that serve populations of 50,000 or less.

As this final rule applies only to one railroad, TCRR, which provides intercity rail passenger service between Dallas and Houston, Texas, which have populations larger than 50,000 people, TCRR is not considered a small entity.

FRA invited all interested parties to submit comments, data, and information demonstrating the potential economic impact on any small entity that would result from the adoption of the final rule. During the comment period, FRA did not receive any comments from the public or stakeholders regarding the impact that the final rule would have on small entities.

Accordingly, the Administrator of FRA hereby certifies that this final rule will not have a significant economic impact on a substantial number of small entities.

C. Paperwork Reduction Act

In accordance with the Paperwork Reduction Act of 1995,[92] and its implementing regulations,[93] when information collection requirements pertain to nine or fewer entities, Office of Management and Budget (OMB) approval of the collection requirements is not required. This regulation pertains to one railroad, and therefore, OMB approval of the paperwork collection requirements in this final rule is not required.

D. Federalism Implications

E.O. 13132, ''Federalism,''[94] requires FRA to develop an accountable process to ensure ''meaningful and timely input by State and local officials in the development of regulatory policies that have federalism implications.'' ''Policies that have federalism implications'' are defined in the E.O. to include regulations that have ''substantial direct effects on the States, on the relationship between the national government and the States, or on the distribution of power and responsibilities among the various levels of government.'' Under E.O. 13132, an agency may not issue a regulation with federalism implications that imposes substantial direct compliance costs and that is not required by statute, unless the Federal Government provides the funds necessary to pay the direct compliance costs incurred by State and local governments, or the agency consults with State and local government officials early in the process of developing the regulation. Where a regulation has federalism implications and preempts State law, the agency seeks to consult with State and local officials in the process of developing the regulation.

This final rule has been analyzed under the principles and criteria contained in E.O. 13132. This final rule will not have a substantial effect on the States or their political subdivisions, and it will not affect the relationships between the Federal Government and the States or their political subdivisions, or the distribution of power and responsibilities among the various levels of government. In addition, FRA has determined that this regulatory action will not impose substantial direct compliance costs on the States or their political subdivisions. Therefore, the consultation and funding requirements of E.O. 13132 do not apply.

However, the final rule arising from this rulemaking could have preemptive effect by operation of law under certain provisions of the Federal railroad safety statutes, specifically the former Federal Railroad Safety Act of 1970,[95] and the former Locomotive Boiler Inspection Act (LIA).[96] Section 20106 provides that States may not adopt or continue in effect any law, regulation, or order related to railroad safety or security that covers the subject matter of a regulation prescribed or order issued by the Secretary of Transportation (with respect to railroad safety matters) or the Secretary of Homeland Security (with respect to railroad security matters), except when the State law, regulation, or order qualifies under the ''essentially local safety or security hazard'' exception to section 20106. Moreover, the former LIA has been interpreted by the Supreme Court as preempting the field concerning locomotive safety.[97]

E. International Trade Impact Assessment

The Trade Agreements Act of 1979 prohibits Federal agencies from engaging in any standards or related activities that create unnecessary obstacles to the foreign commerce of the

[88] 85 FR 14036, 14047.

[89] 5 U.S.C. 601 *et seq.*

[90] 67 FR 53461, Aug. 16, 2002.

[91] ''Size Eligibility Provisions and Standards,'' 13 CFR part 121, subpart A.

[92] 44 U.S.C. 3501–3520.

[93] 5 CFR part 1320.

[94] 64 FR 43255 (Aug. 10, 1999).

[95] Repealed and recodified at 49 U.S.C. 20106.

[96] 45 U.S.C. 22–34, repealed and recodified at 49 U.S.C. 20701–20703.

[97] *See Napier* v. *Atlantic Coast Line R.R.,* 272 U.S. 605 (1926).

United States. Legitimate domestic objectives, such as safety, are not considered unnecessary obstacles.[98] The statute also requires consideration of international standards and, where appropriate, that they be the basis for U.S. standards.

FRA has assessed the potential effect of this final rule on foreign commerce and believes that its requirements are consistent with the Trade Agreements Act. The requirements are safety standards, which, as noted, are not considered unnecessary obstacles to trade.

F. National Environmental Policy Act

FRA is the lead agency for the preparation of the EIS in compliance with CEQ's NEPA-implementing regulations,[99] FRA's *Procedures for Considering Environmental Impacts,*[100] and associated environmental laws. Cooperating agencies in the EIS include the United States Environmental Protection Agency (EPA), the Federal Highway Administration, the Federal Transit Administration, the STB, USACE and the United States Fish and Wildlife Service (USFWS). The Texas Department of Transportation provided technical assistance to FRA in the preparation of the EIS.

FRA published a Notice of Intent (NOI) to prepare an EIS in the **Federal Register** on June 25, 2014.[101] The NOI announced FRA's intent to prepare an EIS and the beginning of the scoping period, provided a brief background on TCRR's proposal, and identified the preliminary contents of the EIS, the required approvals by the Federal Government, and procedures expected for coordination and public involvement based on NEPA requirements.

After publication of the NOI, FRA conducted extended scoping through January 9, 2015. Notification of the extended scoping period included an email to the mailing list, letters to elected officials, FRA media advisory and a notice on FRA's website. FRA also conducted a series of 12 public scoping meetings in October and December 2014. A total of 1,943 individuals, including 118 elected officials, attended 12 public scoping meetings. Additional details on these public scoping meetings may be found on FRA's website.[102]

After scoping, FRA identified the Build Alternatives described in section VI. A. Summary of Alternatives Considered of this final rule, and evaluated the potential impacts of those alternatives in the Draft EIS. On December 22, 2017, EPA published a Notice of Availability (NOA) for the Draft EIS in the **Federal Register**.[103] FRA circulated the Draft EIS to affected local jurisdictions, State and Federal agencies, tribes, community organizations and other interested groups, interested individuals and the public. The Draft EIS was available for public review at 24 locations and posted on the FRA website.[104] FRA published notices that the Draft EIS was available for review in 27 newspapers throughout the area of the proposed Dallas to Houston project and FRA also mailed notices to 2,722 individuals, landowners and organizations on the mailing list.

As required by NEPA, the EIS identified the purpose and need to which the agency is responding.[105] FRA's purpose and need was developed in response to the proposal in the petition submitted by TCRR, which is also the basis for FRA's regulatory action. Accordingly, in the EIS, FRA identified that ''the purpose of the privately proposed Project is to provide the public with reliable and safe HSR transportation between Dallas and Houston.'' The need is described in detail in Section 1.2.2, Introduction, Need of the Final EIS. The Draft EIS analyzed six end-to-end Build Alternatives (Alternatives A through F) and three Houston Terminal Station Options: The Houston Industrial Site Station Terminal, the Houston Northwest Mall Terminal Station, and the Houston Northwest Transit Center Terminal Station, as well as the No Build Alternative. The Build Alternatives included a terminal station in Dallas and an intermediate station in Grimes County. As required by CEQ regulations,[106] the Draft EIS identified Build Alternative A as the Preferred Alternative. The Draft EIS did not identify a preferred Houston Terminal Station option.

The public comment period for the Draft EIS ran from December 22, 2017 through March 9, 2018. FRA conducted 11 public hearings to accept agency and public comments on the Draft EIS during the comment period. FRA received a total of 25,309 comments from approximately 6,000 individuals. A total of 2,971 individuals, including 84 elected officials, attended the 11 public hearings. *See* Section 9.6, Public and Agency Involvement, Draft EIS of the Final EIS for more information on the public comment period and hearing format.

FRA reviewed and assessed all comments (written and oral) received during the public comment period on the Draft EIS through the preparation of the Final EIS. These comments helped to inform FRA's development of the Final EIS. FRA responded to all public comments in the Final EIS.

The Final EIS identifies, evaluates, and documents the potential environmental and socioeconomic effects of FRA's proposed action. This includes implementing TCRR's proposed HSR service between Dallas and Houston as described in TCRR's petition, which is the only future operating location TCRR has identified to FRA. As required by CEQ regulations,[107] the Final EIS identified Build Alternative A (comprised of Segments 1, 2A, 3A, 4, and 5) and the Houston Northwest Mall Terminal Station Option as the Preferred Alternative.

FRA's rulemaking would enable the safe operation of TCRR's HSR system in locations other than between Dallas and Houston, even though FRA is aware of no proposal to operate such service. Thus, the Final EIS also evaluates and documents the reasonably foreseeable potential beneficial and adverse environmental impacts of implementing TCRR's HSR system in any location within the United States.[108] However, as TCRR has not proposed to operate in any other location, discussion of location-specific impacts, other than the service proposed in TCRR's rulemaking petition and conceptual engineering, would be speculative.

FRA signed the Final EIS on May 15, 2020, and EPA published an NOA for the EIS in the **Federal Register** on May 29, 2020.[109] FRA also circulated the Final EIS to affected local jurisdictions, State and Federal agencies, tribes, community organizations and other interested groups, interested individuals and the public. The Final EIS was made available for public review at 24

[98] Public Law 96–39, 19 U.S.C. 2501 *et seq.*

[99] 40 CFR 1500–1508.

[100] 64 FR 28545 (May 26, 1999), as updated in 78 FR 2713 (Jan. 14, 2013).

[101] 79 FR 36123 (Jun. 24, 2014).

[102] FRA. *Dallas to Houston High-Speed Rail—Passenger Service from Houston to Dallas https://railroads.dot.gov/environmental-reviews/dallas-houston-high-speed-rail/dallas-houston-high-speed-rail-passenger,* Dallas to Houston High-Speed Rail Scoping Report.

[103] 82 FR 60723 (Dec. 22, 2017).

[104] FRA. *Dallas to Houston High-Speed Rail—Passenger Service from Houston to Dallas https://railroads.dot.gov/environmental-reviews/dallas-houston-high-speed-rail/dallas-houston-high-speed-rail-passenger,* Draft Environmental Impact Statement.

[105] 40 CFR 1502.13.

[106] 40 CFR 1502.14.

[107] 40 CFR 1502.14.

[108] Section 3.1.2, Impacts of the TCRR HSR System Independent of Location of the Final EIS.

[109] 85 FR 32390 (May 29, 2020).

locations and was posted on the FRA website.[110] FRA also provided 25 print copies and 200 electronic copies (via USB flash drive) of the Final EIS to the public, upon request. The NOA was published in 26 newspapers throughout the area of the proposed Dallas to Houston project and mailed notices to 5,018 individuals, landowners and organizations on the mailing list.

1. Summary of Comments on the Final EIS

FRA reviewed and analyzed comments received since the Final EIS was released on May 29, 2020. FRA received a total of 96 comment submissions from approximately 76 individuals, agencies, businesses, and/or organizations between May 29, 2020 and July 28, 2020. Submissions were categorized by comment topic, which resulted in some submissions being split into multiple comments, and in total FRA received 143 comments. In general, comments were regarding impacts to transportation, cultural resources, build alternatives, project viability, general project support or opposition, or the overall NEPA process. Comments received have raised no new substantive issues relevant to environmental concerns from those received during the public comment period of the Draft EIS (see Appendix H, Response to Draft EIS Comments of the Final EIS) or on topics not already addressed within the Final EIS. However, several comments raised issues that warrant clarification or correction here, specifically comments related to the capital cost of TCRR's proposed Dallas to Houston project, and safety concerns related to electrical arcing from the HSR system and proximity to natural gas pipelines.

Several commenters noted that capital costs publicly reported by TCRR in April 2020 ($30 billion) differ from the capital costs reported in the Final EIS ($16–19 billion). The capital costs estimate in the Final EIS (Section 3.14.5.2.3, Socioeconomics and Community Facilities, Economic Impacts) includes construction labor, materials, indirect costs, and approximately $2.6 billion for systems and rolling stock.

Additional information provided by TCRR clarified that the $30 billion capital costs reported by Texas Central Board Chairman Drayton McLane in an April 8, 2020, letter was based on the overall conservative project costs. This value included the direct costs to design, construct, and commission the rail system as portrayed in the Final EIS, but also other indirect costs excluded from the Final EIS analysis (*e.g.,* land acquisition, litigation, property taxes, insurance, financing costs, and increased costs of foreign supply). TCRR also reported that the $30 billion included contingency and increased escalation of costs.

FRA believes that the increased escalation costs could result in larger economic benefits than what was identified in the Final EIS. Therefore, the escalation values in the $16 billion and $19 billion ($2019) projections from the Final EIS represent a more conservative estimate of the potential beneficial impacts.

Comments regarding safety concerns related to electrical arcing from the HSR system and proximity to natural gas pipelines were similar to the comments FRA received on those topics in response to the NPRM. FRA notes that proximity to pipelines was addressed in the Final EIS (See Section 3.9, Utilities and Energy) and in the detailed discussion in response to comments in section IV. C. General Safety Oversight, of this final rule. As discussed in section IV. H. Electrical Arcing from the Overhead Catenary System, of this final rule, this occurrence is part of the normal operation of an electrical traction power system like the one proposed by TCRR, and by itself does not pose any particular safety risk. FRA does not believe there is a potential environmental impact or safety concern as a result of this phenomenon that requires assessment under NEPA.

Clarifications and/or updates to the Final EIS text, some of which were identified in comments submitted on the Final EIS, are included in the Final EIS Errata and Updated Information.[111]

2. Potential Environmental Impacts

The Final EIS assessed the potential beneficial and adverse environmental impacts of FRA's proposed rulemaking. The Final EIS considered impacts from TCRR's proposed project, the approximately 240-mile, for-profit, HSR system connecting Dallas and Houston based on JRC's Tokaido Shinkansen system technology, as described in Section 2.2, Alternatives Considered, Proposed HSR Infrastructure and Operations of the Final EIS and in the rulemaking petition submitted by TCRR. The HSR service between Dallas and Houston is the only proposed service or future operating location TCRR has identified to FRA and therefore FRA determined it was appropriate to evaluate the potential project-specific impacts of this proposed service. The potential impacts that would result from implementing the proposed project are identified and discussed in Chapter 3.0, Affected Environment and Environmental Consequences and Chapter 4, Indirect and Cumulative Impacts, of the Final EIS and are summarized below in Table 4.

TABLE 4—SUMMARY OF POTENTIAL DIRECT IMPACTS [112]

Evaluation criteria	Measure	Build alts. A–F	Houston Terminal Station options	Total
Air Quality (Final EIS Section 3.2)				
Air Quality Impacts	N/A	Net emissions benefit for permanent operations, temporary construction impacts.		
Water Quality (Final EIS Section 3.3)				
Impaired Waterbodies—303(d) List	Feet	344.7–517.4	0	344.7–517.4
Impaired Waterbodies with TMDLs	Feet	485.3	0	485.3
Impaired Waterbodies Total	Feet	830–1,002.7	0	830–1,002.7
Active Public Water System Wells	Count	1	0	1
Groundwater Wells	Count	7–13	0	7–13

[110] FRA. *Dallas to Houston High-Speed Rail—Passenger Service from Houston to Dallas https://railroads.dot.gov/environmental-reviews/dallas-houston-high-speed-rail/dallas-houston-high-speed-rail-passenger,* Final Environmental Impact Statement.

[111] FRA. *Dallas to Houston High-Speed Rail—Passenger Service from Houston to Dallas https://railroads.dot.gov/environmental-reviews/dallas-houston-high-speed-rail/dallas-houston-high-speed-rail-passenger,* Record of Decision Attachments, Final EIS Errata and Updated Information.

TABLE 4—SUMMARY OF POTENTIAL DIRECT IMPACTS [112]—Continued

Evaluation criteria	Measure	Build alts. A–F	Houston Terminal Station options	Total
Reservoir/Dam Crossings	Count	0	0	0
Noise and Vibration (Final EIS Section 3.4)				
Severe Noise Impact:				
Residential	Count	9–12	0	9–12
Institutional	Count	0	0	0
Moderate Noise Impact:				
Residential	Count	275–295	0	275–295
Institutional	Count	1	0	1
Vibration Impact:				
Residential	Count	0	0	0
Institutional	Count	0	0	0
Hazardous Materials and Solid Waste (Final EIS Section 3.5)				
Low-Risk Hazardous Material Sites	Count	297–326	0–6	297–332
Moderate-Risk Hazardous Material Sites	Count	155–165	3–8	158–173
High-Risk Hazardous Material Sites	Count	3–4	0–2	3–6
Natural Ecological Systems and Protected Species (Final EIS Section 3.6) [113]				
Protected Species Modeled Habitat—Temporary	Acres	325–328	0	325–328
Protected Species Modeled Habitat—Permanent	Acres	1,058–1,452	0	1,058–1,452
Waters of the U.S. (Final EIS Section 3.7)				
Stream Crossings—Temporary	Feet	83,459–90,942	0	83,459–90,942
Stream Crossings—Permanent	Feet	34,839–45,631	0	34,839–45,631
Wetlands—Temporary	Acres	44.3–61.1	0	44.3–61.1
Wetlands—Permanent	Acres	47.4–64.4	0–1.6	47.4–66.0
Waterbodies—Temporary	Acres	27.9–36.3	0–0.1	27.9–36.4
Waterbodies—Permanent	Acres	21.1–29.3	0	21.1–29.3
Floodplains (Final EIS Section 3.8)				
Impacts to 100-Year Floodplain	Acres	557–657	0	557–657.0
Impacts to 500-Year Floodplain	Acres	132–133	0–0.1	132–133.1
Permanent Impacts to 100-Year and 500-Year Floodplains	Acres	479–589	0–0.1	479–589.1
Temporary Impacts to 100-Year and 500-Year Floodplains	Acres	196–225	0	196–225.0
Total Acres of Impacted Floodplain	Acres	689–790	0–0.1	689–790.1
Total Number of Bridge/Viaduct Crossings of FEMA Zone AE	Count	63–76	NA	63–76.0
Total Number of Bridge/Viaduct Crossings of FEMA Zone A	Count	126–155	NA	126–155.0
Utilities and Energy (Final EIS Section 3.9)				
New Electric TPSS Connections	Count	12–13	0	12–13
Electric Utility Pole Adjustments	Count	74–89	0	74–89
Total Electric Connections and Adjustment	Count	87–102	0	87–102
Abandoned Oil and Gas Wells	Count	22–37	0	22–37
Aesthetics and Scenic Resources (Final EIS Section 3.10)				
Total Number of Beneficial [114]	Count	2	1	3
Total Number of Neutral	Count	8	0	8
Total Number of Adverse	Count	2	0	2
Total Number of Adverse Visual Resource Impacts	Count	10–11	0	10–11
Transportation (Final EIS Section 3.11)				
Rail Crossings [115]	Count	27	0	27
Road Modifications [116] (*Public and Private*)	Count	102–158	0	102–158
Road Modifications [117] (*Public only*)	Count	59–80	0	59–80
Length added to Public Roads (miles)	Miles	16.6–46.9	0	16.6–46.9
Length removed from Public Roads (miles)	Miles	5.0–27.2	0	5.0–27.2
Impacts to airports [118]	Count	0–1	0	0–1
Number of Intersections at LOS E or F	Count	NA	22–25	22–25

TABLE 4—SUMMARY OF POTENTIAL DIRECT IMPACTS [112]—Continued

Evaluation criteria	Measure	Build alts. A–F	Houston Terminal Station options	Total
Elderly and Handicapped (Final EIS Section 3.12)				
Elderly and Handicapped Impacts	NA	Proposed project would be designed, constructed and operated in compliance with ADA; therefore, there would be no impacts related to accessibility of the HSR system for the elderly and handicapped.		
Land Use (Final EIS Section 3.13)				
Existing Land Use Conversion—Temporary	Acres	2,393.2–2,592.4	0–27.4	2,393.2–2,619.8
Existing Land Use Conversion—Permanent	Acres	6,610.0–7,295.6	75.8–92.2	6,685.8–7,387.8
Special Status Farmland—Temporary	Acres	1,459.8–1,719.4	0.0	1,459.8–1,719.4
Special Status Farmland—Permanent	Acres	3,483.5–3,764.3	0.0	3,483.5–3,764.3
Special Status Farmland—Indirect [119]	Acres	697.3–888.2	0.0	697.3–888.2
Displacement—Commercial (primary)	Count	42–65	14–22	56–87
Displacement—Residence (primary)	Count	235–269	0	235–269
Displacement—Community Facilities (primary) [120]	Count	2–3	0	2–3
Estimated Permanent Parcel Acquisitions	Count	1,731–1,847	25–43	1,756–1,890
Estimated Temporary Parcel Acquisitions	Count	258–277	0–1	258–278
Estimated Structure Acquisitions—Agriculture	Count	196–230	0	196–230
Estimated Structure Acquisitions—Commercial	Count	12–18	0–1	12–19
Estimated Structure Acquisitions—Community Facilities	Count	0	0	0
Estimated Structure Acquisitions—Cultural/Civic Resources	Count	1–2	0	1–2
Estimated Structure Acquisitions—Oil and Gas	Count	12–17	0	12–17
Estimated Structure Acquisitions—Residence	Count	49–54	0	49–54
Estimated Structure Acquisitions—Transportation and Utilities	Count	0–1	0	0–1
Socioeconomics and Community Facilities (Final EIS Section 3.14)				
Communities with Disrupted Character and Cohesion	Count	4	0	4
Economic Impacts	NA	Positive		
Employment	Job Years	317,207		
Earnings	2019 billions	$14.50		
Tax Revenue	N	Positive		
Children's Health and Safety [121]	Count	0	0–1	0–1
Community Facilities [122]	Count	5	0–1	5–6
Electromagnetic Fields (Final EIS Section 3.15)				
Electromagnetic Field (EMF) Impacts	NA	No EMI or adverse EMF exposure would occur.		
Safety and Security (Final EIS Section 3.16)				
Permanent Road Modifications resulting in 1 minute or more in additional through travel time.	Count	8–13	0	8–13
Permanent Road Modifications reducing through travel time by 1 minute or more.	Count	0–1	0	0–1
Total fire and EMS service areas bisected by construction	Count	51–57	0	51–57
Fire and EMS providers with high potential for construction effects.	Count	3–5	0	3–5
Fire and EMS providers with localized potential for construction effects.	Count	6–8	0	6–8
Recreational Facilities (Final EIS Section 3.17)				
Parks	Count	0–2	0	0–2
Environmental Justice (Final EIS Section 3.18)				
Number of Minority and/or Low-Income block groups intersected by the Study Area.	Count	80–81	5–7	85–88
Number of all block groups intersected by the Study Area	Count	118–119	8–14	126–133
Identified Minority and/or Low-Income Communities	Count	5	1	5
Disproportionately High and Adverse Impact to Minority and/or Low-Income Communities.	NA	No	No	No

TABLE 4—SUMMARY OF POTENTIAL DIRECT IMPACTS [112]—Continued

Evaluation criteria	Measure	Build alts. A–F	Houston Terminal Station options	Total
Cultural Resources (Final EIS Section 3–19)				
Adverse Impacts to Historic Properties	Count	11–14	0–1	11–15
Soils and Geology (Final EIS Section 3.20)				
LOD Area	Acres	9,173.4–9,718.4	0–103.9	9,173.4–9,822.4
Shrink-Swell Potential—Low	Acres	2,585.8–2,848.3	0	2,585.8–2,848.3
Shrink-Swell Potential—Moderate	Acres	1,456.9–1,485.0	3.0–19.2	1,459.9–1,504.0
Shrink-Swell Potential—High	Acres	2,284.0–2,484.4	0	2,284.0–2,484.4
Shrink-Swell Potential—Very High	Acres	2,697.5–2,806.7	0	2,697.5–2,806.7
Erosion Potential—Low	Acres	1,591.3–1,981.9	0	1,591.3–1,981.9
Erosion Potential—Moderate	Acres	4,472.1–4,786.6	3.0–47.0	4,475.1–4,833.6
Erosion Potential—High	Acres	2,907.9–3,036.8	3.0–16.2	2,910.9–3,053.0
Corrosion Potential—Low	Acres	55.3–81.4	0	55.3–81.4
Corrosion Potential—Moderate	Acres	2,182.0–2,761.1	0	2,182.0–2,761.1
Corrosion Potential—High	Acres	6,764.5–7,021.2	11–51	6,775.5–7,072.2
Prime Farmland Soils	Acres	4,990.8–5,454.7	0	4,990.8–5,454.7
Surface Mines [123]	Count	0 [a]	0	0 [a]
Green House Gas Emissions (Final EIS Section 3.21)				
GHG Emissions	NA	No long-term increases in GHG emissions; would likely reduce GHG emissions by shifting the modes of travel		

G. Executive Order 12898 (Environmental Justice)

In accordance with E.O. 12898 and USDOT Order 5610.2(a), FRA is required to identify and address minority and low-income populations that are affected by disproportionately high and adverse impacts by a Federal action and to provide opportunities for meaningful participation. As part of the preparation of the EIS, persons who have a potential interest in the proposed Dallas to Houston project, including members of minority and low-income populations, were invited to participate in the environmental review process.

FRA identified and addressed the potential effects of the alternatives on minority and low-income populations in Section 3.18, Environmental Justice in the Final EIS. FRA conducted specific outreach efforts to connect with potentially impacted minority and low-income populations in the Study Area and to bring awareness of the proposed project to communities or individuals; gather additional feedback on the potential impacts of the proposed project; and identify appropriate mitigation for minority and low-income populations.

Five neighborhoods or communities identified in minority and/or low-income block groups would be potentially impacted: Downtown Dallas, Le May and Le Forge neighborhood, Hash Road and Nail Drive, Plantation Forest and the Houston Terminal Station Option area (including Spring Branch Super Neighborhood). The EIS identified disproportionately high and adverse effects to minority and/or low-income communities near the station locations in Dallas and Houston related to air-quality impacts during construction, as well as effects related to structure displacement and parcel acquisition, and disruption to community cohesion for the Le May and Le Forge neighborhood, Hash Road and Nail Drive, and Plantation Forest communities. All identified locations where there would be disproportionately high and adverse effects would be on Segment 1 and Segment 5, which are common to all Build Alternatives.

TCRR will mitigate adverse air quality effects during construction through use of dust suppression techniques, wetting and covering construction materials transported near homes or businesses, limiting construction vehicle travel

[112] Section references within this table are to the sections of the Final EIS.

[113] Threatened and Endangered Species acreages include habitat for species with modeled habitat that may be impacted, including Houston toad, large-fruited sand verbena and Navasota ladies'-tresses. Threatened and endangered species in the Study Area that may be impacted but that do not have modeled habitat include the interior least tern and the whooping crane.

[114] A single landscape unit is shared between Segment 5 and the Houston Terminal Station Options; therefore, the total number of beneficial landscape units is the same as Build Alternative A.

[115] Totals for rail impacts do not include rail at Houston Terminal Stations. Totals also include DART-owned rail lines in Dallas County.

[116] Road modifications reflect the number of reroutes, road adjustments, or road over rail constructions that would occur. Some roads are affected by multiple modifications (such as IH–45). Modifications do not reflect total number of roads but total number of road construction sites.

[117] Shared access roads are included in roadway modification lengths. Shared access roads will be developed to provide for maintenance, emergency response access, and private property access, with a corresponding reduction in the number of new public roads to decrease burden on roadway authorities. Shared access roads would be constructed and maintained by TCRR.

[118] Anxiety Aerodrome would be directly impacted by Segment 3B, which are part of Alternatives B and E.

[119] Indirect impacts to special status farmland in Section 3.13, Land Use of the Final EIS are defined as a 25-foot setback added to the LOD to account for indirect loss of productive farmland to accommodate the use of farm and ranch equipment or impacts such as induced wind and changes in irrigation.

[120] The ''Community Facilities'' category in Section 3.14, Socioeconomics and Community Facilities of the Final EIS, encompasses categories of affected structures and facilities that are broken down into more defined categories within Section 3.13, Land Use of the Final EIS, therefore values between the two sections are not identical. Refer to the Section for a complete definition of each category.

[121] Children's health and safety impacts are the result of temporary construction effects. These impacts will no longer exist once construction has ended.

[122] The ''Community Facilities'' category in Section 3.14, Socioeconomics and Community Facilities of the Final EIS, encompasses categories of affected structures and facilities that are broken down into more defined categories within Section 3.13, Land Use of the Final EIS, therefore values between the two sections are not identical. Refer to the Section for a complete definition of each category.

[123] The Midlothian Quarry and Plant in Ellis County was identified at approximately one-half-mile west of Segment 2A. Exact limits would need to be field-verified to confirm or discount presence in the Study Area.

speeds and idling of construction equipment, and by complying with the Texas Low Emission Diesel Fuel Program, as identified in the Mitigation Commitments. TCRR will mitigate localized impacts to the Le May and Le Forge neighborhood, the Hash Road and Nail Drive neighborhood and the Plantation Forest neighborhood by implementing mitigation developed based on consultation with community members, as identified in the Mitigation Commitments. Mitigation includes making offers to acquire all properties and attempts to relocate within proximity or in the same neighborhood (for the Le May and Le Forge neighborhood), extending the notice to vacate period, and offering personal relocation assistance. After implementation of mitigation measures, there would be no disproportionately high and adverse impacts to minority and/or low-income populations as a result of the Build Alternatives and Houston Terminal Station Options.

H. Clean Air Act/Air Quality General Conformity

The Clean Air Act of 1970 (as amended) requires Federal agencies to determine the conformity of proposed actions with respect to State Implementation Plans for attainment of air quality goals.[124] As detailed in Section 3.2, Affected Environment and Environmental Consequences, Air Quality of the Final EIS, FRA assessed air quality impacts through an analysis of emissions that would occur during construction and operation of the proposed Dallas to Houston project for a general conformity analysis.[125] FRA has determined that the predicted annual pollutant emissions during the 5-year construction period in nonattainment areas (Dallas-Fort Worth [DFW], Houston-Galveston-Brazoria [HGB], and Freestone and Anderson Counties nonattainment area [FRE]) generated by the proposed project are all below general conformity *de minimis* threshold values and no conformity determination is required.

I. Section 106 of the National Historic Preservation Act

Section 106 of the National Historic Preservation Act (NHPA) and its implementing regulations [126] require that prior to issuing Federal funding, partial funding, permitting, licensing, approval or taking other action, Federal agencies must take into account the effects of their undertakings on historic properties and provide the Advisory Council on Historic Preservation (ACHP) an opportunity to comment on the undertaking.[127] FRA determined that the undertaking would adversely affect historic properties. However, because FRA is not able to fully determine effects to historic properties prior to this final rule, consistent with 36 CFR 800.14(b)(1)(ii), FRA, in consultation with the Texas Historical Commission (THC), ACHP, USACE, TCRR, and other consulting parties, developed a Programmatic Agreement (PA) for the undertaking. The PA establishes the process that governs the resolution of adverse effects from the undertaking.

FRA provided consulting parties with an opportunity to review and comment on the draft PA prior to the release of the Final EIS and provided the public an opportunity to review the draft PA by appending the draft PA to the Final EIS. During the 30-day public review from May 29, 2020, through June 29, 2020, FRA received a total of four comments that were specific to the PA. These include one comment from THC, two comments from consulting parties, and one comment from the public. In response to these comments, FRA added two new consulting parties to the PA. The executed PA is available on FRA's website.[128]

J. Department of Transportation Act Section 4(f) Determination

Section 4(f) of the USDOT Act of 1966 prohibits USDOT agencies from approving the use of a Section 4(f) property unless: The agency determines that there is no feasible or prudent alternative to such use, and a project includes all possible planning to minimize harm to the property resulting from such use; or a finding can be made that a project, including any measure(s) to minimize harm, has a *de minimis,* or minimal, impact on the Section 4(f) property.[129]

Based on the evaluation contained within Chapter 7.0, Section 4(f) and Section 6(f) Evaluation of the Final EIS, FRA determines that there is no prudent and feasible alternative to the use of three properties protected by Section 4(f): DA.023 (Cadiz Street Underpass and Overpass), Dallas; DA.076a (Guiberson Corporation), Dallas; and DA.110b (Linfield Elementary School).

All possible planning to minimize harm, identified through consultation with officials with jurisdiction, was incorporated through TCRR's design refinements to reduce or eliminate impacts to Section 4(f) properties where reasonably feasible.

FRA provided the Section 4(f) evaluation to U.S. Department of the Interior (DOI) and shared it with the officials with jurisdiction for the Section 4(f) properties with the May 29, 2020, release of the Final EIS. DOI did not comment on FRA's Final Section 4(f) Evaluation.

K. Endangered Species Act/Section 7 U.S. Fish and Wildlife Service Biological Opinion

Under the Endangered Species Act (ESA) of 1973 as amended,[130] the USFWS has the authority to list and monitor the status of species whose populations are threatened or endangered, and including the ecosystems on which they depend. Section 7 of the ESA requires that Federal agencies consult with the USFWS to ensure projects they authorize, fund or carry out would not jeopardize the continued existence of an endangered or threatened species or destroy or adversely modify designated critical habitat.

As described in Section 3.6, Natural Ecological Systems and Protected Species, of the Final EIS, FRA determined the proposed Dallas to Houston project would have ''no effect'' on the West Indian manatee (*Trichechus manatus*), golden-cheeked warbler (*Setophaga* [*Dendroica*] *chrysoparia*), Texas fawnsfoot (*Truncilla macrodon*), and Texas prairie dawn (*Hymenoxys texana*) because suitable habitat (or modeled habitat) was not identified within the Action Area. FRA determined it ''may affect, but is not likely to adversely affect'' the Houston toad (*Anaxyrus houstonensis*), interior least tern (*Sterna antillarum*), whooping crane (*Grus americana*) based on the results of presence/absence species surveys and the implementation of avoidance and mitigation measures. FRA determined it ''may affect, and is likely to adversely affect'' due to the presence of Navasota ladies'-tresses (*Spiranthes parksii*) within the Study Area and the potential for large-fruited sand verbena (*Abronia marcocarpa*) in unsurveyed areas.

On November 14, 2019, FRA submitted a Biological Assessment (BA) to USFWS as part of formal consultation

[124] Clean Air Act, 42 U.S.C. 7401 *et seq.* (1970).

[125] 40 CFR part 51, subpart W, and 40 CFR part 93, subpart B.

[126] 36 CFR 800.

[127] 54 U.S.C. 306108.

[128] FRA. *Dallas to Houston High-Speed Rail—Passenger Service from Houston to Dallas https://railroads.dot.gov/environmental-reviews/dallas-houston-high-speed-rail/dallas-houston-high-speed-rail-passenger,* Record of Decision Attachments, Section 106 Programmatic Agreement.

[129] 49 U.S.C. 303.

[130] 16 U.S.C. 1531, *et seq.*

under Section 7(a)(2) of the ESA. USFWS issued a Biological Opinion (BO) detailing mitigation measures for the proposed Dallas to Houston project on July 8, 2020 (02ETTX00–2019–F–2135).[131] The BO found that the proposed Dallas to Houston project would not likely jeopardize the continued existence of the federally endangered large-fruited sand-verbena or the federally endangered Navasota ladies'-tresses, and includes the following conservation measures: TCRR will offset the loss of large-fruited sand-verbena habitat by conserving acres under permanent protection within the species' known geographic range; TCRR will offset the loss of Navasota ladies'-tresses habitat by conserving acres under permanent protection within the species' known geographic range; and TCRR will institute measures to avoid and minimize potential impacts to the 25 Navasota ladies'-tresses individuals found during species-specific surveys in Madison County.

The BO provided concurrence with FRA's determination that the proposed Dallas to Houston project ''may affect, but is not likely to adversely affect'' the interior least tern, whooping crane, and the Houston toad due to implementation of avoidance and minimization measures detailed in Appendix A of the BO. The BO also included additional conservation recommendations specific to the large-fruited sand-verbena; Navasota ladies'-tresses; landscaping to benefit the large-fruited sand-verbena, Navasota ladies'-tresses, and/or their habitats; the candidate species, Texas fawnsfoot; and avian species including migratory birds. TCRR has agreed to comply with the BO.

L. Executive Order 11990 Preservation of the Nation's Wetlands (Executive Order 11990 & DOT Order 5660.1a)

For projects that are undertaken, financed, or assisted by Federal agencies, potential impact to wetlands are considered under E.O. 11990, Protection of Wetlands. The objective of E.O. 11990 is to minimize the destruction, loss or degradation of wetlands while enhancing and protecting the natural and beneficial values.[132] DOT Order 5660.1a sets forth DOT policy for interpreting E.O. 11990 and requires that transportation projects ''located in or having an impact on wetlands'' should be conducted to assure protection of the Nation's wetlands.

In addition, the USACE and EPA have statutory responsibilities under Section 404 of the Clean Water Act (CWA).[133] Under this Act, discharges of dredged or fill material into waters of the U.S. may require permit authorization. Section 401 of the CWA regulates the discharge of pollutants into waters of the U.S. and is enforced by the Texas Commission on Environmental Quality (TCEQ). The USACE has statutory authority under Section 10 of the Rivers and Harbors Act to regulate the construction of any structure in or over a navigable water of the U.S. and for any structure or work that affects the course, location or condition of the navigable waterbody.[134] Section 14 of the Rivers and Harbors Act, commonly referred to as Section 408, requires approval from USACE to alter a USACE federally authorized civil works project.[135]

As detailed within Section 3.7, Affected Environment and Environmental Consequences, Waters of the U.S. of the Final EIS, impacts would occur within waters of the U.S. during the construction and operation of the proposed Dallas to Houston project. TCRR, in coordination with the USACE Fort Worth and Galveston Districts, is developing the final design to avoid and minimize impacts to waters of the U.S., as practicable. However, due to the linear nature and the curvature restrictions associated with the operation of the HSR system, some crossings would be unavoidable. Impacts to waters of the U.S. would require Section 404/401/10 CWA permits and Section 408 permissions from USACE and TCEQ that would include permit provisions to avoid, minimize, and mitigate impacts. TCRR has agreed to implement compliance and mitigation measures to offset effects of construction within the wetlands and waters of the U.S.[136]

M. Floodplain Management (Executive Order 11988 & DOT Order 5650.2)

E.O. 11988, *Floodplain Management* requires Federal agencies avoid adverse impacts on floodplains to the extent possible, determine whether reasonable alternatives exist that avoid impacts to floodplains, and avoid situations that would support floodplain development if a practicable alternative exists.[137] USDOT Order 5650.2 (*Floodplain Management and Protection*) establishes policies and procedures for transportation projects regarding floodplain impacts that include avoiding and minimizing, where practicable or reasonable, adverse impacts to floodplains and restoring and preserving natural and beneficial floodplain functions that are adversely impacted by transportation projects.[138]

As detailed within 3.8, Affected Environment and Environmental Consequences, Floodplains of the Final EIS, FRA determined that the proposed Dallas to Houston project would impact 748 acres of 100-year and 500-year regulatory floodplains. During construction, the footprint of the LOD additional workspace area, laydown yards and construction workspace would have a temporary impact to the floodplains. The HSR track and supporting facilities (*e.g.,* permanent roads, parking areas, access/maintenance areas, terminals, and non-vegetated embankments) would also result in a permanent impact to the floodplain system and a permanent increase in impervious cover and an increase in ground compaction in those areas during operations.

TCRR's proposed design would minimize potential increases to the floodplain elevations by retaining existing water surface elevations where feasible to avoid impacting the available flood storage and minimizing fill in sensitive areas. Many regulatory floodplains and unregulated stream segments would be fully spanned and potential impacts avoided. TCRR will implement best management practices for construction and operation within floodplains as detailed in the Mitigation Commitments.

N. Executive Order 13175 (Tribal Consultation)

FRA has evaluated this final rule in accordance with the principles and criteria contained in E.O. 13175, ''Consultation and Coordination with Indian Tribal Governments,'' dated

[131] FRA. *Dallas to Houston High-Speed Rail—Passenger Service from Houston to Dallas https://railroads.dot.gov/environmental-reviews/dallas-houston-high-speed-rail/dallas-houston-high-speed-rail-passenger,* Record of Decision Attachments, Biological Opinion. FRA has since reinitiated consultation for the limited purpose of addressing TCRR's recent identification of locations for permittee responsible mitigation. The reinitiation follows TCRR's consultation with the USACE Fort Worth District as part of the Clean Water Act permitting process and does not affect the BO.

[132] The White House, E.O. 11990—Protection of Wetlands, 42 FR 2696.1, Office of the White House Press Secretary, 1977.

[133] 33 U.S.C. 1251 *et seq.*

[134] 33 U.S.C. 403.

[135] 33 U.S.C. 408.

[136] FRA. *Dallas to Houston High-Speed Rail—Passenger Service from Houston to Dallas https://railroads.dot.gov/environmental-reviews/dallas-houston-high-speed-rail/dallas-houston-high-speed-rail-passenger,* Record of Decision Attachments, Mitigation Commitments.

[137] 44 CFR 9, Floodplain Management and Protection of Wetlands, 2003.

[138] USDOT, *Floodplain Management and Protection,* DOT 5650.2, 1979.

November 6, 2000. This final rule will not have a substantial direct effect on one or more Indian tribes, will not impose substantial direct compliance costs on Indian tribal governments, and will not preempt tribal laws. Therefore, the funding and consultation requirements of E.O. 13175 do not apply, and a tribal summary impact statement is not required.

O. Unfunded Mandates Reform Act of 1995

Under section 201 of the Unfunded Mandates Reform Act of 1995 (Pub. L. 104–4, 2 U.S.C. 1531), each Federal agency ''shall, unless otherwise prohibited by law, assess the effects of Federal regulatory actions on State, local, and tribal governments, and the private sector (other than to the extent that such regulations incorporate requirements specifically set forth in law).'' Section 202 of the Act (2 U.S.C. 1532) further requires that ''before promulgating any general notice of proposed rulemaking that is likely to result in the promulgation of any rule that includes any Federal mandate that may result in expenditure by State, local, and tribal governments, in the aggregate, or by the private sector, of $100,000,000 or more (adjusted annually for inflation) in any 1 year, and before promulgating any final rule for which a general notice of proposed rulemaking was published, the agency shall prepare a written statement'' detailing the effect on State, local, and tribal governments and the private sector. This final rule will not result in the expenditure, in the aggregate, of $100,000,000 or more (as adjusted annually for inflation) in any one year, and thus preparation of such a statement is not required.

P. Energy Impact

E.O. 13211, ''Actions Concerning Regulations That Significantly Affect Energy Supply, Distribution, or Use,'' requires Federal agencies to prepare a Statement of Energy Effects for any ''significant energy action.'' [139] FRA has evaluated this final rule in accordance with E.O. 13211 and determined that this regulatory action is not a ''significant energy action'' within the meaning of the E.O.

E.O. 13783, ''Promoting Energy Independence and Economic Growth,'' requires Federal agencies to review regulations to determine whether they potentially burden the development or use of domestically produced energy resources, with particular attention to oil, natural gas, coal, and nuclear energy resources.[140] FRA has determined this regulatory action will not burden the development or use of domestically produced energy resources.

List of Subjects in 49 CFR Part 299

High-speed rail, Incorporation by reference, Railroad safety, Reporting and recordkeeping requirements, Tokaido Shinkansen.

The Rule

For the reasons discussed in the preamble, FRA adds part 299 to chapter II, subtitle B of title 49, Code of Federal Regulations as follows:

■ 1. Part 299 is added to read as follows:

PART 299—TEXAS CENTRAL RAILROAD HIGH–SPEED RAIL SAFETY STANDARDS

Subpart A—General Requirements

Sec.
299.1 Purpose and scope.
299.3 Applicability.
299.5 Definitions.
299.7 Responsibility for compliance.
299.9 Notifications and filings.
299.11 Electronic recordkeeping.
299.13 System description.
299.15 Special approvals.
299.17 Incorporation by reference.

Subpart B—Signal and Trainset Control System

Sec.
299.201 Technical PTC system requirements.
299.203 PTC system required.
299.205 PTC System Certification.
299.207 PTC Safety Plan content requirements.
299.209 PTC system use and failures.
299.211 Communications and security requirements.
299.213 Records retention.
299.215 Operations and Maintenance Manual.

Subpart C—Track Safety Standards

Sec.
299.301 Restoration or renewal of track under traffic conditions.
299.303 Measuring track not under load.
299.305 Drainage.
299.307 Vegetation.
299.309 Classes of track: operating speed limits.
299.311 Track geometry; general.
299.313 Track geometry; performance based.
299.315 Curves; elevations and speed limitations.
299.317 Track strength.
299.319 Track fixation and support.
299.321 Defective rails.
299.323 Continuous welded rail (CWR) plan.
299.325 Continuous welded rail (CWR); general.
299.327 Rail end mismatch.
299.329 Rail joints and torch cut rails.
299.331 Turnouts and crossings generally.
299.333 Frog guard rails and guard faces; gauge.
299.335 Derails.
299.337 Automated vehicle-based inspection systems.
299.339 Daily sweeper inspection.
299.341 Inspection of rail in service.
299.343 Initial inspection of new rail and welds.
299.345 Visual inspections; right-of-way.
299.347 Special inspections.
299.349 Inspection records.
299.351 Qualifications for track maintenance and inspection personnel.
299.353 Personnel qualified to supervise track restoration and renewal.
299.355 Personnel qualified to inspect track.
299.357 Personnel qualified to inspect and restore continuous welded rail.

Subpart D—Rolling Stock

Sec.
299.401 Clearance requirements.
299.403 Trainset structure.
299.405 Trainset interiors.
299.407 Glazing.
299.409 Brake system.
299.411 Bogies and suspension system.
299.413 Fire safety.
299.415 Doors.
299.417 Emergency lighting.
299.419 Emergency communication.
299.421 Emergency roof access.
299.423 Markings and instructions for emergency egress and rescue access.
299.425 Low-location emergency exit path marking.
299.427 Emergency egress windows.
299.429 Rescue access windows.
299.431 Driver's controls and cab layout.
299.433 Exterior lights.
299.435 Electrical system design.
299.437 Automated monitoring.
299.439 Event recorders.
299.441 Trainset electronic hardware and software safety.
299.443 Safety appliances.
299.445 Trainset inspection, testing, and maintenance requirements.
299.447 Movement of defective equipment.

Subpart E—Operating Rules

Sec.
299.501 Purpose.
299.503 Operating rules; filing and recordkeeping.
299.505 Programs of operational tests and inspections; recordkeeping.
299.507 Program of instruction on operating rules; recordkeeping.

Subpart F—System Qualification Tests

Sec.
299.601 Responsibility for verification demonstrations and tests.
299.603 Preparation of system-wide qualification test plan.
299.605 Functional and performance qualification tests.
299.607 Pre-revenue service systems integration testing.
299.609 Vehicle/track system qualification.
299.611 Simulated revenue operations.
299.613 Verification of compliance.

[139] 66 FR 28355 (May 22, 2001).

[140] 82 FR 16093 (Mar. 31, 2017).

Subpart G—Inspection, Testing, and Maintenance Program

Sec.
299.701 General requirements.
299.703 Compliance.
299.705 Standard procedures for safely performing inspection, testing, and maintenance, or repairs.
299.707 Maintenance intervals.
299.709 Quality control program.
299.711 Inspection, testing, and maintenance program format.
299.713 Program approval procedures.

Appendix A to Part 299—Criteria for Certification of Crashworthy Event Recorder Memory Module

Appendix B to Part 299—Cab Noise Test Protocol

Authority: 49 U.S.C. 20103, 20107, 20133, 20141, 20302–20303, 20306, 20701–20702, 21301–21302, 21304; 28 U.S.C. 2461, note; and 49 CFR 1.89.

Subpart A—General Requirements

§ 299.1 Purpose and scope.

This part prescribes minimum Federal safety standards for the high-speed transportation system described in detail in § 299.13, known as Texas Central Railroad, LLC and hereinafter referred to as the ''railroad.'' The purpose of this part is to prevent accidents, casualties, and property damage which could result from operation of this system.

§ 299.3 Applicability.

(a) This part applies only to the railroad, as described in § 299.13.

(b) Except as stated in paragraph (c) of this section, this part, rather than the generally applicable Federal railroad safety regulations, shall apply to the railroad.

(c) The following Federal railroad safety regulations found in Title 49 of the Code of Federal Regulations, and any amendments are applicable to the railroad.

(1) Part 207, Railroad Police Officers;

(2) Part 209, Railroad Safety Enforcement Procedures;

(3) Part 210, Railroad Noise Emission Compliance Regulations;

(4) Part 211, Rules of Practice;

(5) Part 212, State Safety Participation Regulations;

(6) Part 214, Railroad Workplace Safety, except § 214.339;

(7) Part 216, Special Notice and Emergency Order Procedures;

(8) Part 218, Railroad Operating Practices;

(9) Part 219, Control of Alcohol and Drug Use;

(10) Part 220, Radio Standards and Procedures;

(11) Part 225, Railroad Accidents/Incidents: Reports, Classification, and Investigations;

(12) Part 227, Occupational Noise Exposure except § 227.119(c)(10) and (11) with respect to the railroad's high-speed trainsets only, which shall comply with 299.431(h) and (i);

(13) Part 228, Hours of Service of Railroad Employees;

(14) Part 233, Signal Systems Reporting Requirements;

(15) Part 235, Instructions Governing Applications for Approval of a Discontinuance or Material Modification of a Signal System or Relief from the Requirements of Part 236, except § 235.7;

(16) Part 236, Installation, Inspection, Maintenance and Repair of Signal and Train Control System, Devices, and Appliances, subparts A through G, as excepted by the railroad's PTC Safety Plan (PTCSP) under § 299.201(d);

(17) Part 237, Railroad Bridge Safety Standards;

(18) Part 239, Passenger Train Emergency Preparedness;

(19) Part 240, Qualification and Certification of Locomotive Engineers;

(20) Part 242, Qualification and Certification of Train Conductors;

(21) Part 243, Training, Qualification, and Oversight for Safety-Related Railroad Employees;

(22) Part 270, System Safety Program

(23) Part 272, Critical Incident Stress Plans; and

(24) The following parts shall apply to the railroad's maintenance-of-way equipment as it is used in work trains, rescue operations, yard movements, and other non-passenger functions:

(i) Part 215, Railroad Freight Car Safety Standards;

(ii) Part 223, Glazing Standards;

(iii) Part 229, Railroad Locomotive Safety Standards, except—

(A) Section 229.71. Instead, the railroad's maintenance-of-way equipment shall comply with § 299.401(b), except for the sweeper vehicle, which shall have a clearance above top of rail no less than 35 mm (1.77 inches).

(B) Section 229.73. Instead, the railroad's maintenance-of-way equipment shall be designed so as to be compatible with the railroad's track structure under subpart C of this part.

(iv) Part 231, Railroad Safety Appliance Standards; and,

(v) Part 232, Railroad Power Brakes and Drawbars.

(d) The Federal railroad safety statutes apply to all railroads, as defined in 49 U.S.C. 20102. The railroad covered by this part is a railroad under that definition. Therefore, the Federal railroad safety statutes, Subtitle V of Title 49 of the United States Code, apply directly to the railroad. However, pursuant to authority granted under 49 U.S.C. 20306, FRA has exempted the railroad from certain requirements of 49 U.S.C. ch. 203.

§ 299.5 Definitions.

As used in this part—

Absolute block means a block of track circuits in which no trainset is permitted to enter while occupied by another trainset.

Adjusting/de-stressing means the procedure by which a rail's neutral temperature is readjusted to the desired value. It typically consists of cutting the rail and removing rail anchoring devices, which provides for the necessary expansion and contraction, and then re-assembling the track.

Administrator means the Administrator of the FRA or the Administrator's delegate.

Associate Administrator means FRA's Associate Administrator for Safety and Chief Safety Officer, or that person's delegate.

Automatic train control (ATC) means the signaling system, composed of ground and on-board equipment. The on-board equipment continually receives a signal from the ground equipment. ATC on-board equipment controls the trainset speed to prevent train-to-train collisions and overspeed derailments.

ATC cut-out mode means the mode of ATC on-board equipment used for emergency operations to disable the ATC on-board equipment on the trainset.

ATC main line mode means the mode of ATC on-board equipment which controls trainset speed on mainlines.

ATC overrun protection means an overlay of the ATC shunting mode to prevent overrun at the end of a track.

ATC shunting mode means the mode of ATC on-board equipment which restricts the trainsets maximum speed to 30 km/h (19 mph).

Brake, air means a combination of devices operated by compressed air, arranged in a system and controlled electrically or pneumatically, by means of which the motion of a train or trainset is retarded or arrested.

Brake, disc means a retardation system used on the passenger trainsets that utilizes flat discs as the braking surface.

Brake, electric means a trainset braking system in which the kinetic energy of a moving trainset is used to generate electric current at the traction motors, which is then returned into the catenary system.

Brake, emergency application means a brake application initiated by a de-energized brake command and is retrievable when there is no malfunction that initiates an automatic emergency brake application. An emergency brake application can be initiated by the driver or automatically by ATC. An emergency brake application, as defined here, is equivalent to a full-service brake application in the U.S.

Brake, urgent application means an irretrievable brake application designed to minimize the braking distance. An urgent brake application, as defined here, is the equivalent of an emergency brake application in the U.S.

Bogie means an assembly that supports the weight of the carbody and which incorporates the suspension, wheels and axles, traction motors and friction brake components. Each unit of a trainset is equipped with two bogies. In the U.S., a bogie is commonly referred to as a truck.

Broken rail means a partial or complete separation of an otherwise continuous section of running rail, excluding rail joints, expansion joints, and insulated joints.

Buckling incident/buckling rail means the formation of a lateral misalignment caused by high longitudinal compressive forces in a rail sufficient in magnitude to exceed the track geometry alignment safety limits defined in § 299.311.

Buckling-prone condition means a track condition that can result in the track being laterally displaced due to high compressive forces caused by critical rail temperature combined with insufficient track strength and/or train dynamics.

Cab means the compartment or space within a trainset that is designed to be occupied by a driver and contain an operating console for exercising control over the trainset.

Cab car means a rail vehicle at the leading or trailing end, or both, of a trainset which has a driver's cab and is intended to carry passengers, baggage, or mail. A cab car may or may not have propelling motors.

Cab end structure means the main support projecting upward from the underframe at the cab end of a trainset.

Cab signal means a signal located in the driver's compartment or cab, indicating a condition affecting the movement of a trainset.

Calendar day means a time period running from one midnight to the next midnight on a given date.

Cant deficiency means the additional height, which if added to the outer rail in a curve, at the designated vehicle speed, would provide a single resultant force, due to the combined effects of weight and centrifugal force on the vehicle, having a direction perpendicular to the plane of the track.

Continuous welded rail (CWR) means rail that has been welded together into lengths exceeding 122 m (400 feet). Rail installed as CWR remains CWR, regardless of whether a joint is installed into the rail at a later time.

Consist, fixed means a semi-permanently coupled trainset that is arranged with each unit in a specific location and orientation within the trainset.

Core system, high-speed means the safety-critical systems, sub-systems, and procedures required for a high-speed system operation that assures a safe operation as required within this part.

Crewmember means a railroad employee called to perform service covered by 49 U.S.C. 21103.

Critical buckling stress means the minimum stress necessary to initiate buckling of a structural member.

Desired rail installation temperature range means the rail temperature range in a specific geographical area, at which forces in CWR installed in that temperature range should not cause a track buckle in extreme heat, or a pull-apart during extreme cold weather.

Disturbed track means the disturbance of the roadbed or ballast section, as a result of track maintenance or any other event, which reduces the lateral or longitudinal resistance of the track, or both.

Driver means any person who controls the movement of a trainset(s) from the cab, and is required to be certified under 49 CFR part 240. A driver, as used in this part, is equivalent to a locomotive engineer.

Employee or railroad employee means an individual who is engaged or compensated by the railroad or by a contractor to the railroad to perform any of the duties defined in this part.

Event recorder means a device, designed to resist tampering, that monitors and records data, as detailed in §§ 299.439 and 236.1005(d) of this chapter, over the most recent 48 hours of operation of the trainset.

Expansion joint means a piece of special trackwork designed to absorb heat-induced expansion and contraction of the rails.

General control center means the location where the general control center staff work.

General control center staff means qualified individuals located in the general control center who are responsible for the safe operation of the railroad's high-speed passenger rail system. The duties of individuals who work at the general control center include: Trainset movement control, crew logistic management, signaling, passenger services, rolling stock logistic management, and right-of-way maintenance management.

Glazing, end-facing means any exterior glazing installed in a trainset cab located where a line perpendicular to the exterior surface glazing material makes horizontal angle of 50 degrees or less with the longitudinal center line of the rail vehicle in which the panel is installed. A glazing panel that curves so as to meet the definition for both side-facing and end-facing glazing is end-facing glazing.

Glazing, exterior means a glazing panel that is an integral part of the exterior skin of a rail vehicle with a surface exposed to the outside environment.

Glazing, side-facing means any glazing located where a line perpendicular to the exterior surface of the panel makes an angle of more than 50 degrees with the longitudinal center line of the rail vehicle in which the panel is installed.

High voltage means an electrical potential of more than 150 volts.

In passenger service/in revenue service means a trainset that is carrying, or available to carry, passengers. Passengers need not have paid a fare in order for the trainset to be considered in passenger or in revenue service.

In service means, when used in connection with a trainset, a trainset subject to this part that is in revenue service, unless the equipment—

(1) Is being handled in accordance with § 299.447, as applicable;

(2) Is in a repair shop or on a repair track;

(3) Is on a storage track and is not carrying passengers; or,

(4) Is parked at a station location and has been properly secured in accordance with §§ 299.409(n) and 299.431(d).

Insulated joint, glued means a rail joint located at the end of a track circuit designed to insulate electrical current from the signal system in the rail.

Interior fitting means any component in the passenger compartment which is mounted to the floor, ceiling, sidewalls, or end walls and projects into the passenger compartment more than 25 mm (1 in.) from the surface or surfaces to which it is mounted. Interior fittings do not include side and end walls, floors, door pockets, or ceiling lining materials, for example.

Intermediate car means a passenger car or unit of a trainset located between cab cars which may or may not have propelling motors.

L/V ratio means the ratio of the lateral force that any wheel exerts on an individual rail to the vertical force exerted by the same wheel on the rail.

Lateral means the horizontal direction perpendicular to the direction of travel.

Locomotive means a piece of on-track rail equipment, other than hi-rail, specialized maintenance, or other similar equipment, which may consist of one or more units operated from a single control stand with one or more propelling motors designed for moving other passenger equipment; with one or more propelling motors designed to transport freight or passenger traffic, or both; or without propelling motors but with one or more control stands.

Longitudinal means in a direction parallel to the direction of travel of a rail vehicle.

Marking/delineator means a visible notice, sign, symbol, line or trace.

N700 means the N700 series trainset that is based on trainsets currently in, or future variants operated on, JRC's Tokaido Shinkansen system, or any unit thereof.

Occupied volume means the volume of a passenger car or a unit in a trainset where passengers or crewmembers are normally located during service operation, such as the cab and passenger seating areas. The entire width of a vehicle's end compartment that contains a control stand is an occupied volume. A vestibule is typically not considered occupied.

On-board attendant means a qualified individual on a trainset that is responsible for coordination with a station platform attendant to assure safety during passenger boarding and alighting within a station. An on-board attendant, as used in this part, is equivalent to a passenger conductor.

Override means to climb over the normal coupling or side buffers and linking mechanism and impact the end of the adjoining rail vehicle or unit above the underframe.

Overrun protection coil means track circuit cables placed short of turnouts, or crossovers within stations and trainset maintenance facilities to prevent unauthorized route access.

Passenger car means a unit of a trainset intended to provide transportation for members of the general public. A cab car and an intermediate car are considered passenger cars.

Passenger compartment means an area of a passenger car that consists of a seating area and any vestibule that is connected to the seating area by an open passageway.

Passenger equipment means the N700 series trainset that is based on trainsets currently in, or future variants operated on, JRC's Tokaido Shinkansen system, or any unit thereof.

Permanent deformation means the undergoing of a permanent change in shape of a structural member of a rail vehicle.

PTC means positive train control as further described in § 299.201.

Qualified individual means a person that has successfully completed all instruction, training, and examination programs required by both the employer and this part, and that the person, therefore, may reasonably be expected to perform his or her duties proficiently in compliance with all Federal railroad safety laws, regulations, and orders.

Rail neutral temperature is the temperature at which the rail is neither in compression nor tension.

Rail temperature means the temperature of the rail, measured with a rail thermometer.

Rail vehicle means railroad rolling stock, including, but not limited to, passenger and maintenance vehicles.

Railroad equipment means all trains, trainsets, rail cars, locomotives, and on-track maintenance vehicles owned or used by the railroad.

Railroad, the means the company, also known as the Texas Central Railroad, LLC, which is the entity that will operate and maintain the high-speed rail system initially connecting Dallas to Houston, Texas, and is responsible for compliance with all aspects of this rule.

Repair point means a location designated by the railroad where repairs of the type necessary occur on a regular basis. A repair point has, or should have, the facilities, tools, and personnel qualified to make the necessary repairs. A repair point need not be staffed continuously.

Representative car/area means a car/area that shares the relevant characteristics as the car(s)/area(s) it represents (*i.e.,* same signage/marking layout, and charging light system for passive systems or light fixtures and power system for electrically powered systems).

Rollover strength means the strength provided to protect the structural integrity of a rail vehicle in the event the vehicle leaves the track and impacts the ground on its side or roof.

Safety appliance means an appliance, required under 49 U.S.C. ch. 203, excluding power brakes. The term includes automatic couplers, handbrakes, crew steps, handholds, handrails, or ladder treads made of steel or a material of equal or greater mechanical strength used by the traveling public or railroad employees that provides a means for safe coupling, uncoupling, or ascending or descending passenger equipment.

Safety-critical means a component, system, software, or task that, if not available, defective, not functioning, not functioning correctly, not performed, or not performed correctly, increases the risk of damage to railroad equipment or injury to a passenger, railroad employee, or other person.

Search, valid means a continuous inspection for internal rail defects where the equipment performs as intended and equipment responses are interpreted by a qualified individual as defined in subpart C.

Semi-permanently coupled means coupled by means of a drawbar or other coupling mechanism that requires tools to perform the coupling or uncoupling operation. Coupling and uncoupling of each semi-permanently coupled unit in a trainset can be performed safely only while at a trainset maintenance facility where personnel can safely get under a unit or between units, or other location under the protections of

subpart B of part 218 of this chapter.

Side sill means that portion of the underframe or side at the bottom of the rail vehicle side wall.

Shinkansen, Tokaido means the high-speed rail system operated by the Central Japan Railway Company between Tokyo and Shin-Osaka, Japan, that is fully dedicated and grade separated.

Slab track means railroad track structure in which the rails are attached to and supported by a bed or slab, usually of concrete (or asphalt), which acts to transfer the load and provide track stability.

Spall, glazing means small pieces of glazing that fly off the back surface of the glazing when an object strikes the front surface.

Speed, maximum approved means the maximum trainset speed approved by FRA based upon the qualification tests conducted under § 299.609(g).

Speed, maximum authorized means the speed at which trainsets are permitted to travel safely, as determined by all operating conditions and signal indications.

Speed, maximum safe operating means the highest speed at which trainset braking may occur without thermal damage to the discs.

Station platform attendant means a qualified individual positioned on the station platform in close proximity to the train protection switches while a trainset is approaching and departing a station, and is responsible for coordination with an on-board attendant to assure safety during passenger boarding and alighting within a station.

Superelevation means the actual elevation of the outside rail above the inside rail.

Sweeper vehicle means a rail vehicle whose function is to detect obstacles within the static construction gauge prior to the start of daily revenue service.

Tight track means CWR which is in a considerable amount of compression.

Track acceleration measurement system (TAMS) means an on-track, vehicle-borne technology used to measure lateral and vertical carbody accelerations.

Track geometry measurement system (TGMS) means an on-track, vehicle-borne technology used to measure track surface, twist, crosslevel, alignment, and gauge.

Track lateral resistance means the resistance provided to the rail/crosstie structure against lateral displacement.

Track longitudinal resistance means the resistance provided by the rail anchors/rail fasteners and the ballast section to the rail/crosstie structure against longitudinal displacement.

Track, non-ballasted means a track structure not supported by ballast in which the rails are directly supported by concrete or steel structures. Non-ballasted track can include slab track and track structures where the rails are directly fixed to steel bridges or to servicing pits within trainset maintenance facilities.

Train means a trainset, or locomotive or locomotive units coupled with or without cars.

Train-induced forces means the vertical, longitudinal, and lateral dynamic forces which are generated during train movement and which can contribute to the buckling potential of the rail.

Train protection switch means a safety device located on station platforms and on safe walkways along the right-of-way. The train protection switch is tied directly into the ATC system and is used in the event that trainsets in the immediate area must be stopped.

Trainset means a passenger train including the cab cars and intermediate cars that are semi-permanently coupled to operate as a single consist. The individual units of a trainset are uncoupled only for emergencies or maintenance conducted in repair facilities.

Trainset maintenance facility means a location equipped with the special tools, equipment, and qualified individuals capable of conducting pre-service inspections and regular inspections on the trainsets in accordance with the railroad's inspection, testing, and maintenance program. Trainset maintenance facilities are also considered repair points.

Transponder means a wayside component of the ATC system used to provide trainset position correction on the mainline or to provide an overlay of overrun protection within a trainset maintenance facility.

Underframe means the lower horizontal support structure of a rail vehicle.

Unit, trainset means a cab car or intermediate car of a trainset.

Vestibule means an area of a passenger car that normally does not contain seating, is located adjacent to a side exit door, and is used in passing from a seating area to a side exit door.

Yard means a system of tracks within defined limits and outside of the territory controlled by signals, which can be used for the making up of non-passenger trains or the storing of maintenance-of-way equipment.

Yield strength means the ability of a structural member to resist a change in length caused by an applied load. Exceeding the yield strength will cause permanent deformation of the member.

§ 299.7 Responsibility for compliance.

(a) The railroad shall not—

(1) Use, haul, or permit to be used or hauled on its line(s) any trainset—

(i) With one or more defects not in compliance with this part; or

(ii) That has not been inspected and tested as required by a provision of this part.

(2) Operate over any track, except as provided in paragraph (e) of this section, with one or more conditions not in compliance this part, if the railroad has actual knowledge of the facts giving rise to the violation, or a reasonable person acting in the circumstances and exercising reasonable care would have that knowledge.

(3) Violate any other provision of this part or any provision of the applicable FRA regulations listed under § 299.3(c).

(b) For purposes of this rule, a trainset shall be considered in use prior to the trainset's departure as soon as it has received, or should have received the inspection required under this part for movement and is ready for service.

(c) Although many of the requirements of this part are stated in terms of the duties of the railroad, when any person (including, but not limited to, a contractor performing safety-related tasks under contract to the railroad subject to this part) performs any function required by this part, that person (whether or not the railroad) is required to perform that function in accordance with this part.

(d) For purposes of this part, the railroad shall be responsible for compliance with all track safety provisions set forth in subpart C of this part. When the railroad and/or its assignee have actual knowledge of the facts giving rise to a violation, or a reasonable person acting in the circumstances and exercising reasonable care would have knowledge that the track does not comply with the requirements of this part, it shall—

(1) Bring the track into compliance;

(2) Halt operations over that track; or

(3) Continue operations over the segment of non-complying track in accordance with the provisions of § 299.309(b) or (c).

(e) The FRA Administrator may hold the railroad, the railroad's contractor, or both responsible for compliance with the requirements of this part and subject to civil penalties.

§ 299.9 Notifications and filings.

All notifications and filings to the FRA required by this part shall be submitted to the Associate Administrator for Railroad Safety and Chief Safety Officer, 1200 New Jersey Avenue SE, Washington, DC 20590, unless otherwise specified.

§ 299.11 Electronic recordkeeping.

The railroad's electronic recordkeeping shall be retained such that—

(a) The railroad maintains an information technology security program adequate to ensure the integrity of the electronic data storage system, including the prevention of unauthorized access to the program logic or individual records;

(b) The program and data storage system must be protected by a security system that utilizes an employee identification number and password, or a comparable method, to establish appropriate levels of program access meeting all of the following standards:

(1) No two individuals have the same electronic identity; and

(2) A record cannot be deleted or altered by any individual after the record is certified by the employee who created the record.

(c) Any amendment to a record is either—

(1) Electronically stored apart from the record that it amends; or

(2) Electronically attached to the record as information without changing the original record;

(d) Each amendment to a record uniquely identifies the person making the amendment;

(e) The system employed by the railroad for data storage permits reasonable access and retrieval; and

(f) Information retrieved from the system can be easily produced in a printed format which can be readily provided to FRA representatives in a timely manner and authenticated by a designated representative of the railroad as a true and accurate copy of the railroad's records if requested to do so by FRA representatives.

§ 299.13 System description.

(a) *General.* This section describes the components, operations, equipment, and systems of the railroad's high-speed rail system. The railroad shall adhere to the following general requirements:

(1) The railroad shall not exceed the maximum trainset speed approved by FRA under § 299.609(g) while in revenue service, up to a maximum speed of 330 km/h (205 mph).

(2) The railroad shall not transport or permit to be transported in revenue service any product that has been established to be a hazardous material pursuant to 49 CFR part 172, as amended.

(3) The railroad shall not conduct scheduled right-of-way maintenance on a section of the right-of-way prior to that section of the right-of-way being cleared of all revenue service trainsets (including any trainset repositioning moves), and proper action is taken by the general control center staff to protect incursion into established maintenance zones by revenue trainsets. Additionally, the railroad shall not commence revenue service prior to completion of the maintenance activities, that section of the right-of-way being cleared of all maintenance-of-way equipment. Further, the railroad is prohibited from commencing revenue operations until after conclusion of the daily sweeper inspection, under § 299.339, and the general control center returning the signal and trainset control system to the state required to protect revenue operations.

(b) *Right-of-way.* (1) The railroad shall operate on a completely dedicated right-of-way and shall not operate or conduct joint operations with any other freight equipment, other than the railroad's maintenance-of-way equipment, or passenger rail equipment. Only the railroad's high-speed trainsets approved for revenue operations under this part, and any equipment required for construction, maintenance, and rescue purposes may be operated over the railroad's right-of-way.

(2) There shall be no public highway-rail grade crossings. Animal and non-railroad equipment crossings shall be accomplished by means of an underpass or overpass. Private at-grade crossings shall be for the exclusive use by the railroad and shall be limited to track Classes H0 and H1.

(3) The railroad shall develop and comply with a right-of-way barrier plan. The right-of-way barrier plan shall be maintained at the system headquarters and will be made available to FRA upon request. At a minimum, the plan will contain provisions in areas of demonstrated need for the prevention of—

(i) Vandalism;

(ii) Launching of objects from overhead bridges or structures onto the path of trainsets;

(iii) Intrusion of vehicles from adjacent rights-of-way; and

(iv) Unauthorized access to the right-of-way.

(4) The entire perimeter of the system's right-of-way, except for elevated structures such as bridges and viaducts, shall be permanently fenced. Elevated structures shall be equipped with walkways and safety railing.

(5) The railroad shall install intrusion detectors in accordance with the requirements set forth in subpart B of this part.

(6) The railroad shall install rain, flood, and wind detectors in locations identified by the railroad, based on relevant criteria used by JRC to provide adequate warning of when operational restrictions are required due to adverse weather conditions. Operating restrictions shall be defined in the railroad's operating rules.

(7) Access to the right-of-way for maintenance-of-way staff shall be provided on both sides of the right-of-way in accordance with the inspection, testing, and maintenance program. This access shall be protected against entry by unauthorized persons.

(8) Provisions shall be made to permit emergency personnel to access the right-of-way in accordance with the Emergency Preparedness Plan pursuant to part 239 of this chapter. This access shall be protected against entry by unauthorized persons.

(9) Throughout the length of the right-of-way, the railroad shall install walkways located at a safe distance from the tracks at a minimum distance of 2.0 m (6.56 feet) from the field side of the outside rail for a design speed of 330 km/h (205 mph). The walkways shall be used primarily for track and right-of-way inspection, but may be used for emergency evacuation or rescue access.

(10) Access to the right-of-way by maintenance-of-way personnel shall not be allowed during revenue operations unless the access is outside the minimum safe distance defined in § 299.13(b)(9). In the event of unscheduled maintenance or repair, emergency access will be provided under specific circumstances allowed under the railroad's operating rules and the inspection, testing, and maintenance program.

(11) The railroad shall record all difficulties and special situations regarding geology, hydrology, settlement, landslide, concrete, and quality criteria that arise during construction of the right-of-way. After construction, the railroad shall monitor

the stability and quality standards of structures such as bridges, viaducts, and earth structures.

(12) The railroad shall make available for review by the FRA the track layout drawings which show, at a minimum, the following information:

(i) Length of straight sections, spirals and curves, curve radius, superelevation, superelevation variations, gradients, and vertical curve radii;

(ii) Turnouts and crossover location, technology, and geometry;

(iii) Maximum operating speed and allowable cant deficiencies;

(iv) Signal boxes, Go/No-Go signals, and communication devices;

(v) Details and arrangement of track circuitry;

(vi) Power feeding equipment including sectionalization, and return routing;

(vii) Location of accesses to the right-of-way; and

(viii) The railroad shall also submit the specifications for the track layout, permissible track forces, components such as rail, ballast, ties, rail fasteners, and switches.

(13) Protection devices shall be installed on all highway bridge overpasses in accordance with the right-of-way plan in paragraph (b)(3) of this section.

(14) There shall be no movable bridges in the railroad's system. Stationary rail bridges located over highways or navigable waterways shall have their foundations, piers, or other support structure appropriately protected against the impact of road vehicles or water-borne vessels.

(15) Train protection switches shall be installed at regular intervals on both sides of the right-of-way at intervals defined by the railroad and at intervals not to exceed 60 m (197 feet) on platforms within stations. These devices shall act directly on the ATC system.

(16) The railroad shall use the design wheel and rail profiles, service-proven on the Tokaido Shinkansen system, or alternate wheel and rail profiles approved by FRA.

(c) *Railroad system safety*—(1) *Inspection, testing, and maintenance procedures and criteria.* The railroad shall develop, implement, and use a system of inspection, testing, maintenance procedures and criteria, under subpart G of this part, which are initially based on the Tokaido Shinkansen system service-proven procedures and criteria, to ensure the integrity and safe operation of the railroad's rolling stock, infrastructure, and signal and trainset control system. The railroad may, subject to FRA review and approval, implement inspection, testing, maintenance procedures and criteria, incorporating new or emerging technology, under § 299.713(c)(4).

(2) *Operating practices.* The railroad shall develop, implement, and use operating rules, which meet the standards set forth in subpart E of this part and which are based on practices and procedures proven on the Tokaido Shinkansen system to ensure the integrity and safe operation of the railroad's system. The railroad shall have station platform attendants on the platform in close proximity to the train protection switches required by paragraph (b)(15) of this section, while trainsets are approaching and departing the station. The railroad's operating rules shall require coordination between on-board crew and station platform attendants to assure safety during passenger boarding and alighting from trainsets at stations.

(3) *Personnel qualification requirements.* The railroad shall develop, implement, and use a training and testing program, which meets the requirements set forth in this part and part 243 of this chapter, to ensure that all personnel, including railroad employees and employees of railroad contractors, possess the skills and knowledge necessary to effectively perform their duties.

(4) *System qualification tests.* The railroad shall develop, implement, and use a series of operational and design tests, which meet the standards set forth in subpart F of this part, to demonstrate the safe operation of system components, and the system as a whole.

(d) *Track and infrastructure.* (1) The railroad shall construct its track and infrastructure to meet all material and operational design criteria, within normal acceptable construction tolerances, and to meet the requirements set forth in subpart C of this part.

(2) The railroad shall operate on nominal standard gauge, 1,435 mm (56.5 inches), track.

(3) The railroad shall install and operate on double track throughout the mainlines, with a minimum nominal distance between track centerlines of 4 m (13.1 feet) for operating speeds up to 170 km/h (106 mph) (track Classes up to H4) and 4.2 m (13.8 feet) for operating speeds greater than 170 km/h (106 mph) (track Classes H5 and above). Generally, each track will be used for a single direction of traffic, and trainset will not overtake each other on mainline tracks (except at non-terminal station locations). The railroad may install crossover connections between the double track at each station, and at regular intervals along the line to permit flexibility in trainset operations, maintenance, and emergency rescue.

(4) The railroad's main track (track Classes H4 and above) shall consist of continuous welded rail. Once installed, the rail shall be field-welded to form one continuous track segment except rail expansion joints and where glued-insulated joints are necessary for signaling purposes. The rail shall be JIS E 1101 60 kg rail, as specified in JIS E 1101:2001(E) as amended by JIS E 1101:2006(E), and JIS E 1101:2012(E) (all incorporated by reference, see § 299.17).

(5) In yards and maintenance facilities, where operations will be at lower speeds, the railroad shall install either JIS E 1101 50kgN rail or JIS E 1101 60 kg rail as specified in JIS E 1101:2001(E) as amended by JIS E 1101:2006(E), and JIS E 1101:2012(E) (all incorporated by reference, see § 299.17).

(6) The railroad shall use either ballasted or non-ballasted track to support the track structure, as appropriate for the intended high-speed system.

(i) Except as noted in paragraph (c)(6)(ii) of this section, for ballasted mainline track structure, the railroad shall install pre-stressed concrete ties.

(ii) For special track work such as turnouts and expansion joints, and at transitions to bridges, and for non-ballasted track, the railroad shall install either pre-stressed, composite ties, or use direct fixation. Detailed requirements are included in subpart C of this part.

(7) Turnouts, expansion joints and glued-insulated joints shall be of the proven design as used on the Tokaido Shinkansen system.

(8) The trainsets and stations shall be designed to permit level platform boarding for passengers and crew at all side entrance doors. Provisions for high level boarding shall be made at all locations in trainset maintenance facilities where crew and maintenance personnel are normally required to access or disembark trainsets.

(e) *Signal and trainset control systems.* (1) The railroad's signal and trainset control systems, shall be based upon the service-proven system utilized on the Tokaido Shinkansen system and shall include an automatic train control (ATC) system, interlocking equipment, and wayside equipment, including: track circuits, transponders, and Go/No-Go signals in stations and trainset maintenance facilities.

(2) The railroad's signaling system shall extend beyond the mainline into trainset maintenance facilities and be

designed to prevent collisions at all speeds.

(3) The ATC system shall be designed with a redundant architecture utilizing an intrinsic fail-safe design concept.

(4) The trainset braking curves shall be determined by the on-board equipment based on the ATC signal from the ground facility and on-board database that includes the alignment and rolling stock performance data. The on-board equipment shall generate the braking command based upon the trainset location, speed, and braking curves.

(5) The ATC on-board equipment shall have three modes: mainline, shunting, and cut-out.

(i) Mainline mode shall be used for operations on mainlines and for entering into the trainset maintenance facilities. The mainline mode of ATC on-board equipment shall provide the following functions:

(A) Prevent train-to-train collisions; and

(B) Prevent overspeed derailments.

(ii) Shunting mode shall be used to protect movements within trainset maintenance facilities and for emergency operations as required by the operating rules. When operating in shunting mode, the trainset shall be restricted to a maximum speed of 30 km/h.

(iii) Cut-out mode shall be used for emergency operations and/or in the event of an ATC system failure as required by the operating rules.

(6) Interlocking equipment shall prevent the movement of trainsets through a switch in an improper position and command switch-and-lock movements on mainlines and within trainset maintenance facilities.

(7) Track circuits shall be used to provide broken rail detection.

(8) Overrun protection coils shall be used at mainline turnouts, crossovers within stations and trainset maintenance facilities to prevent unauthorized route access.

(9) Transponders shall be used on the mainline to provide trainset position correction. Transponders may be used to provide an overlay of overrun protection within a trainset maintenance facility.

(10) Go/No-Go signals shall be used in stations for shunting and emergency operations and in trainset maintenance facilities to provide trainset movement authority.

(11) The railroad shall include an intrusion detection system as required by paragraph (b)(3) and (5) of this section that shall interface with the ATC system and have the capability to stop the trainset under specified intrusion scenarios.

(f) *Communications.* (1) The railroad shall install a dedicated communication system along the right-of-way to transmit data, telephone, and/or radio communications that is completely isolated and independent of the signal and trainset control system. To ensure transmission reliability, the system shall include back-up transmission routes.

(2) For trainset operation and maintenance, the railroad shall install—

(i) A portable radio system for maintenance and service use; and

(ii) A trainset radio, which shall facilitate communication between each trainset and the general control center.

(g) *Rolling stock.* (1) The railroad's rolling stock shall be designed, operated, and maintained in accordance with the requirements set forth in subparts D, E, and G of this part.

(2) The railroad shall utilize bi-directional, fixed-consist, electric multiple unit (EMU), high-speed trainsets based on the N700.

(3) Each trainset shall be equipped with wheel slide control.

(4) Each trainset shall be equipped with two electrically connected pantographs. The position of the pantographs (up or down) shall be displayed in the driver's cab.

(5) The driver's cab shall be a full width and dedicated cab and shall be arranged to enhance safety of operation, range of vision, visibility and readability of controls and indicators, accessibility of controls, and climate control.

(6) The railroad's passenger equipment brake system shall be based on the N700's design and shall meet the following standards:

(i) Each trainset shall be equipped with an electronically controlled brake system that shall ensure that each unit in the trainset responds independently to a brake command. The brake command shall be transmitted through the on-board internal trainset control network, as well as through the trainline for redundancy.

(A) Motorized cars shall be equipped with regenerative and electronically controlled pneumatic brakes. The system shall be designed to maximize the use of regenerative brakes.

(B) Non-motorized cars shall be equipped with electronically controlled pneumatic brakes.

(C) The friction brakes on each bogie shall be cheek mounted disc brakes.

(D) Each car shall be equipped with an electronic and pneumatic brake control unit and a main reservoir. The system shall be designed that in the event of a failure of an electronic control unit in a car, brake control shall be provided by the electronic control unit on the adjacent car. Each car in the trainset shall be equipped with a backup wheel slide protection controller that will provide wheel slide protection in the event of a wheel slide protection controller failure.

(ii) The braking system shall be designed with the following brake controls: Service, emergency, urgent, and rescue brake.

(iii) The service and emergency brake shall be applied automatically by ATC or manually by the driver.

(iv) The urgent brake control shall be independent of the service and emergency brake control and shall be automatically applied if the trainset is parted. Application of the urgent brake shall produce an irretrievable stop. The urgent brake force shall be designed to vary according to speed in order to minimize the braking distance and avoid excessive demand of adhesion at higher speeds.

(v) A disabled trainset shall be capable of having its brake system controlled electronically by a rescue trainset.

(vi) Independent of the driver's brake handle in the cab, each trainset shall be equipped with two urgent brake switches in each cab car, accessible only to the crew; located adjacent to the door control station and that can initiate an urgent brake application. If door control stations are provided in intermediate cars that are accessible only to crew members, then the urgent brake switches must also be included adjacent to the door control stations.

(vii) The railroad shall establish a maximum safe operating speed to address brake failures that occur in revenue service as required by § 299.409(f)(4). In the event of any friction brake failure on a trainset, the speed shall be limited by ATC on-board equipment in accordance with the brake failure switch position selected by the driver and as required by § 299.447.

§ 299.15 Special approvals.

(a) *General.* The following procedures govern consideration and action upon requests for special approval of alternative standards to this part.

(b) *Petitions for special approval of alternative standard.* Each petition for special approval of an alternative standard shall contain—

(1) The name, title, address, and telephone number of the primary person to be contacted with regard to review of the petition;

(2) The alternative proposed, in detail, to be substituted for the particular requirements of this part; and

(3) Appropriate data or analysis, or both, establishing that the alternative will provide at least an equivalent level of safety.

(c) *Petitions for special approval of alternative compliance.* Each petition for special approval of alternative compliance shall contain—

(1) The name, title, address, and telephone number of the primary person to be contacted with regard to the petition;

(2) High-speed core systems and system components of special design shall be deemed to comply with this part, if the FRA Associate Administrator determines under paragraph (d) of this section that the core system or system components provide at least an equivalent level of safety in the environment defined within § 299.13 with respect to the protection of railroad employees and the public. In making a determination under paragraph (d) of this section the Associate Administrator shall consider, as a whole, all of those elements of casualty prevention or mitigation relevant to the integrity of the core system or components that are addressed by the requirements of this part.

(d) *Petition contents.* The Associate Administrator may only make a finding of equivalent safety and compliance with this part, based upon a submission of data and analysis sufficient to support that determination. The petition shall include—

(1) The information required by § 299.15(b) or (c), as appropriate; Information, including detailed drawings and materials specifications, sufficient to describe the actual construction and function of the core systems or system components of special design;

(2) A quantitative risk assessment, incorporating the design information and engineering analysis described in this paragraph, demonstrating that the core systems or system components, as utilized in the service environment defined in § 299.13, presents no greater hazard of serious personal injury than existing core system or system components that conform to the specific requirements of this part.

(e) **Federal Register** *notice.* FRA will publish a notice in the **Federal Register** concerning each petition under paragraphs (b) and (c) of this section.

(f) *Comment.* Not later than 30 days from the date of publication of the notice in the **Federal Register** concerning a petition under paragraphs (b) and (c) of this section, any person may comment on the petition.

(1) Each comment shall set forth specifically the basis upon which it is made, and contain a concise statement of the interest of the commenter in the proceeding.

(2) Each comment shall be submitted to the U.S. Department of Transportation, Docket Operations (M–30), West Building Ground Floor, Room W12–140, 1200 New Jersey Avenue SE, Washington, DC 20590, and shall contain the assigned docket number for that proceeding. The form of such submission may be in written or electronic form consistent with the standards and requirements established by the Federal Docket Management System and posted on its website at *http://www.regulations.gov.*

(g) *Disposition of petitions.* (1) FRA will conduct a hearing on a petition in accordance with the procedures provided in § 211.25 of this chapter.

(2) If FRA finds that the petition complies with the requirements of this section or that the proposed plan is acceptable the petition will be granted, normally within 90 days of its receipt. If the petition is neither granted nor denied within 90 days, the petition remains pending for decision. FRA may attach special conditions to the approval of the petition. Following the approval of a petition, FRA may reopen consideration of the petition for cause stated.

(3) If FRA finds that the petition does not comply with the requirements of this section, or that the proposed plan is not acceptable or that the proposed changes are not justified, or both, the petition will be denied, normally within 90 days of its receipt.

(4) When FRA grants or denies a petition, or reopens consideration of the petition, written notice is sent to the petitioner and other interested parties.

§ 299.17 Incorporation by reference.

Certain material is incorporated by reference into this part with the approval of the Director of the Federal Register under 5 U.S.C. 552(a) and 1 CFR part 51. All approved material is available for inspection at Federal Railroad Administration, Docket Clerk, 1200 New Jersey Avenue SE, Washington, DC 20590 (telephone: 202–493–6052); email: *FRALegal@dot.gov* and is available from the sources indicated in this section. It is also available for inspection at the National Archives and Records Administration (NARA). For information on the availability of this material at NARA, email *fedreg.legal@nara.gov* or go to www.archives.gov/federal-register/cfr/ibr-locations.html.

(a) ASTM International, 100 Barr Harbor Drive, PO Box C700, West Conshohocken, PA 19428–2959, *www.astm.org.*

(1) ASTM D 4956–07$^{\varepsilon 1}$, Standard Specification for Retroreflective Sheeting for Traffic Control, approved March 15, 2007; into § 299.423.

(2) ASTM E 810–03, Standard Test Method for Coefficient of Retroreflection of Retroreflective Sheeting Utilizing the Coplanar Geometry, approved February 10, 2003; into § 299.423.

(3) ASTM E 2073–07, Standard Test Method for Photopic Luminance of Photoluminescent (Phosphorescent) Markings, approved July 1, 2007; into § 299.423.

(b) Japanese Standards Association 3–13–12 Mita, Minato-ku, Tokyo, 108–0073, Japan, *www.jsa.or.jp* (Japanese site), or *www.jsa.or.jp/en* (English site).

(1) JIS B 8265:2010(E) ''Construction of pressure vessels-general principles,'' Published December 27, 2010, Second English edition, published December 2013; into § 299.409.

(2) JIS E 1101:2001(E), ''Flat bottom railway rails and special rails for switches and crossings of non-treated steel,'' Published March 21, 2001, Second English edition, published August 2008; into § 299.13(d).

(3) JIS E 1101:2006(E) ''Flat bottom railway rails and special rails for switches and crossings of non-treated steel,'' (Amendment 1), Published March 27, 2006, First English edition, published December 2006; into § 299.13(d).

(4) JIS E 1101:2012(E) ''Flat bottom railway rails and special rails for switches and crossings of non-treated steel,'' (Amendment 2), Published February 20, 2012, First English edition, May 2012; into § 299.13(d).

(5) JIS E 7105:2006(E), ''Rolling Stock—Test methods of static load for body structures,'' Published February 6, 2006, First English edition published May 2010; into § 299.403(b).

(6) JIS E 7105:2011(E), ''Rolling Stock—Test methods of static load for body structures,'' (Amendment 1) Published September 7, 2011, First English edition, published December 2011; into § 299.403(b).

Subpart B—Signal and Trainset Control System

§ 299.201 Technical PTC system requirements.

(a) The railroad shall comply with all applicable requirements under 49 U.S.C. 20157, including, but not limited to, the statutory requirement to fully implement an FRA-certified PTC system prior to commencing revenue service.

(b) The railroad's PTC system shall be designed to prevent train-to-train

collisions, over-speed derailments, incursions into established work zone limits, and movements of trainset through switches left in the wrong position, reliably and functionally, in accordance with § 236.1005(a) and (c) through (f) of this chapter.

(c) The railroad is authorized to conduct field testing of its PTC system on its system, prior to obtaining PTC System Certification from FRA, in accordance with its system-wide qualification test plan under § 299.603. During any field testing of its uncertified PTC system and regression testing of its FRA-certified PTC system, FRA may oversee the railroad's testing, audit any applicable test plans and procedures, and impose additional testing conditions that FRA believes may be necessary for the safety of trainset operations.

(d) The railroad is not exempted from compliance with any requirement of subparts A through G of 49 CFR part 236, or 49 CFR parts 233 and 235, unless the railroad's FRA-approved PTCSP provides for such an exemption.

(e)(1) All materials filed in accordance with this subpart must be in the English language, or have been translated into English and attested as true and correct.

(2) Each filing referenced in this subpart may include a request for full or partial confidentiality in accordance with § 209.11 of this chapter. If confidentiality is requested as to a portion of any applicable document, then in addition to the filing requirements under § 209.11 of this chapter, the person filing the document shall also file a copy of the original unredacted document, marked to indicate which portions are redacted in the document's confidential version without obscuring the original document's contents.

§ 299.203 PTC system required.

The railroad shall not commence revenue service prior to installing and making operative its FRA-certified PTC system.

§ 299.205 PTC System Certification.

(a) Prior to operating its PTC system in revenue service, the railroad must first obtain a PTC System Certification from FRA by submitting an acceptable PTCSP and obtaining FRA's approval of its PTCSP.

(b) Each PTCSP requirement under this subpart shall be supported by information and analysis sufficient to establish that the PTC system meets the requirements of § 236.1005(a) and (c) through (f) of this chapter.

(c) If the Associate Administrator finds that the PTCSP and its supporting documentation support a finding that the PTC system complies with § 236.1005(a) and (c) through (f) of this chapter and § 299.211, the Associate Administrator shall approve the PTCSP. If the Associate Administrator approves the PTCSP, the railroad shall receive PTC System Certification for its PTC system and shall implement the PTC system according to the PTCSP.

(d) Issuance of a PTC System Certification is contingent upon FRA's confidence in the implementation and operation of the subject PTC system. This confidence may be based on FRA-monitored field testing or an independent assessment performed in accordance with § 236.1017 of this chapter.

(e)(1) As necessary to ensure safety, FRA may attach special conditions to its certification of the railroad's PTC System.

(2) After granting a PTC System Certification, FRA may reconsider the PTC System Certification upon revelation of any of the following factors concerning the contents of the PTCSP:

(i) Potential error or fraud;

(ii) Potentially invalidated assumptions determined as a result of in-service experience or one or more unsafe events calling into question the safety analysis supporting the approval.

(3) During FRA's reconsideration in accordance with this paragraph, the PTC system may remain in use if otherwise consistent with the applicable law and regulations, and FRA may impose special conditions for use of the PTC system.

(4) After FRA's reconsideration in accordance with this paragraph, FRA may:

(i) Dismiss its reconsideration and continue to recognize the existing PTC System Certification;

(ii) Allow continued operations under such conditions the Associate Administrator deems necessary to ensure safety; or

(iii) Revoke the PTC System Certification and direct the railroad to cease operations.

(f) FRA shall be afforded reasonable access to monitor, test, and inspect processes, procedures, facilities, documents, records, design and testing materials, artifacts, training materials and programs, and any other information used in the design, development, manufacture, test, implementation, and operation of the system, as well as interview any personnel.

(g) Information that has been certified under the auspices of a foreign regulatory entity recognized by the Associate Administrator may, at the Associate Administrator's sole discretion, be accepted as independently verified and validated and used to support the railroad's PTCSP.

(h) The railroad shall file its PTCSP in FRA's Secure Information Repository at *https://sir.fra.dot.gov,* consistent with § 299.201(e).

§ 299.207 PTC Safety Plan content requirements.

(a) The railroad's PTCSP shall contain the following elements:

(1) A hazard log consisting of a comprehensive description of all safety-relevant hazards of the PTC system, specific to implementation on the railroad, including maximum threshold limits for each hazard (for unidentified hazards, the threshold shall be exceeded at one occurrence);

(2) A description of the safety assurance concepts that are to be used for system development, including an explanation of the design principles and assumptions;

(3) A risk assessment of the as-built PTC system;

(4) A hazard mitigation analysis, including a complete and comprehensive description of each hazard and the mitigation techniques used;

(5) A complete description of the safety assessment and Verification and Validation processes applied to the PTC system, their results, and whether these processes address the safety principles described in appendix C to part 236 of this chapter directly, using other safety criteria, or not at all;

(6) A complete description of the railroad's training plan for railroad, and contractor employees and supervisors necessary to ensure safe and proper installation, implementation, operation, maintenance, repair, inspection, testing, and modification of the PTC system;

(7) A complete description of the specific procedures and test equipment necessary to ensure the safe and proper installation, implementation, operation, maintenance, repair, inspection, testing, and modification of the PTC system on the railroad and establish safety-critical hazards are appropriately mitigated. These procedures, including calibration requirements, shall be consistent with or explain deviations from the equipment manufacturer's recommendations;

(8) A complete description of the configuration or revision control measures designed to ensure that the railroad or its contractor does not adversely affect the safety-functional requirements and that safety-critical hazard mitigation processes are not

compromised as a result of any such change;

(9) A complete description of all initial implementation testing procedures necessary to establish that safety-functional requirements are met and safety-critical hazards are appropriately mitigated;

(10) A complete description of all post-implementation testing (validation) and monitoring procedures, including the intervals necessary to establish that safety-functional requirements, safety-critical hazard mitigation processes, and safety-critical tolerances are not compromised over time, through use, or after maintenance (adjustment, repair, or replacement) is performed;

(11) A complete description of each record necessary to ensure the safety of the system that is associated with periodic maintenance, inspections, tests, adjustments, repairs, or replacements, and the system's resulting conditions, including records of component failures resulting in safety-relevant hazards (*see* § 299.213);

(12) A safety analysis to determine whether, when the system is in operation, any risk remains of an unintended incursion into a roadway work zone due to human error. If the analysis reveals any such risk, the PTCSP shall describe how that risk will be mitigated;

(13) A complete description of how the PTC system will enforce authorities and signal indications;

(14) A complete description of how the PTC system will appropriately and timely enforce all integrated hazard detectors in accordance with § 236.1005 of this chapter;

(15) The documents and information required under § 299.211;

(16) A summary of the process for the product supplier or vendor to promptly and thoroughly report any safety-relevant failures or previously unidentified hazards to the railroad, including when another user of the product experiences a safety-relevant failure or discovers a previously unidentified hazard;

(17) Documentation establishing—by design, data, or other analysis—that the PTC system meets the fail-safe operation criteria under paragraph (b)(4)(v) of appendix C to part 236 of this chapter; and,

(18) An analysis establishing that the PTC system will be operated at a level of safety comparable to that achieved over the 5-year period prior to the submission of the railroad's PTCSP by other train control systems that perform PTC functions, and which have been utilized on high-speed rail systems with similar technical and operational characteristics in the United States or in foreign service.

(b) As the railroad's PTC system may be considered a standalone system pursuant to § 236.1015(e)(3) of this chapter, the following requirements apply:

(1) The PTC system shall reliably execute the functions required by § 236.1005 of this chapter and be demonstrated to do so to FRA's satisfaction; and

(2) The railroad's PTCSP shall establish, with a high degree of confidence, that the system will not introduce any hazards that have not been sufficiently mitigated.

(c) When determining whether the PTCSP fulfills the requirements under this section, the Associate Administrator may consider all available evidence concerning the reliability of the proposed system.

(d) When reviewing the issue of the potential data errors (for example, errors arising from data supplied from other business systems needed to execute the braking algorithm, survey data needed for location determination, or mandatory directives issued through the computer-aided dispatching system), the PTCSP must include a careful identification of each of the risks and a discussion of each applicable mitigation. In an appropriate case, such as a case in which the residual risk after mitigation is substantial, the Associate Administrator may require submission of a quantitative risk assessment addressing these potential errors.

(e) The railroad must comply with the applicable requirements under § 236.1021 of this chapter prior to modifying a safety-critical element of an FRA-certified PTC system.

(f) If a PTCSP applies to a PTC system designed to replace an existing certified PTC system, the PTCSP will be approved provided that the PTCSP establishes with a high degree of confidence that the new PTC system will provide a level of safety not less than the level of safety provided by the system to be replaced.

§ 299.209 PTC system use and failures.

(a) When any safety-critical PTC system component fails to perform its intended function, the cause must be determined and the faulty component adjusted, repaired, or replaced without undue delay. Until repair of such essential components is completed, the railroad shall take appropriate action as specified in its PTCSP.

(b) Where a trainset that is operating in, or is to be operated within, a PTC-equipped track segment experiences a PTC system failure or the PTC system is otherwise cut out while en route (*i.e.,* after the trainset has departed its initial terminal), the trainset may only continue in accordance with all of the following:

(1) Except as provided in paragraph (b)(4) of this section, when no absolute block protection is established, the trainset may proceed at a speed not to exceed restricted speed.

(2) When absolute block protection can be established in advance of the trainset, the trainset may proceed at a speed not to exceed 120 km/h (75 mph), and the trainset shall not exceed restricted speed until the absolute block in advance of the trainset is established.

(3) A report of the failure or cut-out must be made to a designated railroad officer of the railroad as soon as safe and practicable.

(4) Where the PTC system is the exclusive method of delivering mandatory directives, an absolute block must be established in advance of the trainset as soon as safe and practicable, and the trainset shall not exceed restricted speed until the absolute block in advance of the trainset is established.

(5) Where the failure or cut-out is a result of a defective onboard PTC apparatus, the trainset may be moved in passenger service only to the next forward location where the necessary repairs can be made; however, if the next forward location where the necessary repairs can be made does not have the facilities to handle the safe unloading of passengers, the trainset may be moved past the repair location in service only to the next forward passenger station in order to facilitate the unloading of passengers. When the passengers have been safely unloaded, the defective trainset shall be moved to the nearest location where the onboard PTC apparatus can be repaired or exchanged.

(c) The railroad shall comply with all provisions in its PTCSP for each PTC system it uses and shall operate within the scope of initial operational assumptions and predefined changes identified.

(d) The normal functioning of any safety-critical PTC system must not be interfered with in testing or otherwise without first taking measures to provide for the safe movement of trainsets that depend on the normal functioning of the system.

(e) The railroad shall comply with the reporting requirements under § 236.1029(h) of this chapter.

(f) The railroad and the PTC system vendors and/or suppliers must comply with each applicable requirement under § 236.1023 of this chapter.

§ 299.211 Communications and security requirements.

(a) All wireless communications between the office, wayside, and onboard components in a PTC system shall provide cryptographic message integrity and authentication.

(b) Cryptographic keys required under this section shall—

(1) Use an algorithm approved by the National Institute of Standards or a similarly recognized and FRA-approved standards body;

(2) Be distributed using manual or automated methods, or a combination of both; and

(3) Be revoked—

(i) If compromised by unauthorized disclosure of the cleartext key; or

(ii) When the key algorithm reaches its lifespan as defined by the standards body responsible for approval of the algorithm.

(c) The cleartext form of the cryptographic keys shall be protected from unauthorized disclosure, modification, or substitution, except during key entry when the cleartext keys and key components may be temporarily displayed to allow visual verification. When encrypted keys or key components are entered, the cryptographically protected cleartext key or key components shall not be displayed.

(d) Access to cleartext keys shall be protected by a tamper-resistant mechanism.

(e) If the railroad elects to also provide cryptographic message confidentiality, it shall:

(1) Comply with the same requirements for message integrity and authentication under this section; and

(2) Only use keys meeting or exceeding the security strength required to protect the data as defined in the railroad's PTCSP.

(f) The railroad, or its vendor or supplier, shall have a prioritized service restoration and mitigation plan for scheduled and unscheduled interruptions of service. This plan shall be made available to FRA upon request, without undue delay, for restoration of communication services that support PTC system services.

§ 299.213 Records retention.

(a) The railroad shall maintain at a designated office on the railroad—

(1) A current copy of each FRA-approved PTCSP that it holds;

(2) Adequate documentation to demonstrate that the PTCSP meets the safety requirements of this RPA, including the risk assessment;

(3) An Operations and Maintenance Manual, pursuant to § 299.215; and

(4) Training and testing records pursuant to § 236.1043(b) of this chapter.

(b) Results of inspections and tests specified in the PTCSP must be recorded pursuant to § 236.110 of this chapter.

(c) Each contractor providing services relating to the testing, maintenance, or operation of the railroad's PTC system shall maintain at a designated office training records required under §§ 236.1043(b) of this chapter, and 299.207(a)(6).

(d) After the PTC system is placed in service, the railroad shall maintain a database of all safety-relevant hazards as set forth in its PTCSP and those that had not been previously identified in its PTCSP. If the frequency of the safety-relevant hazards exceeds the threshold set forth in its PTCSP, then the railroad shall—

(1) Report the inconsistency in writing to FRA's Secure Information Repository at *https://sir.fra.dot.gov,* within 15 days of discovery;

(2) Take prompt countermeasures to reduce the frequency of each safety-relevant hazard to below the threshold set forth in its PTCSP; and

(3) Provide a final report when the inconsistency is resolved to FRA's Secure Information Repository at *https://sir.fra.dot.gov,* on the results of the analysis and countermeasures taken to reduce the frequency of the safety-relevant hazard(s) below the threshold set forth in its PTCSP.

§ 299.215 Operations and Maintenance Manual.

(a) The railroad shall catalog and maintain all documents as specified in its PTCSP for the operation, installation, maintenance, repair, modification, inspection, and testing of the PTC system and have them in one Operations and Maintenance Manual, readily available to persons required to perform such tasks and for inspection by FRA and FRA-certified state inspectors.

(b) Plans required for proper maintenance, repair, inspection, and testing of safety-critical PTC systems must be adequate in detail and must be made available for inspection by FRA and FRA-certified state inspectors where such PTC systems are deployed or maintained. They must identify all software versions, revisions, and revision dates. Plans must be legible and correct.

(c) Hardware, software, and firmware revisions must be documented in the Operations and Maintenance Manual according to the railroad's configuration management control plan and any additional configuration/revision control measures specified in its PTCSP.

(d) Safety-critical components, including spare equipment, must be positively identified, handled, replaced, and repaired in accordance with the procedures specified in the railroad's PTCSP.

(e) The railroad shall designate in its Operations and Maintenance Manual an appropriate railroad officer responsible for issues relating to scheduled interruptions of service.

Subpart C—Track Safety Standards

§ 299.301 Restoration or renewal of track under traffic conditions.

(a) Restoration or renewal of track, other than in yards and trainset maintenance facilities, under traffic conditions is prohibited.

(b) Restoration or renewal of track under traffic conditions on track Class H2 in trainset maintenance facilities is limited to the replacement of worn, broken, or missing components or fastenings that do not affect the safe passage of trainset.

(c) The following activities are expressly prohibited on track Class H2 in trainset maintenance facilities under traffic conditions:

(1) Any work that interrupts rail continuity, *e.g.,* as in joint bar replacement or rail replacement;

(2) Any work that adversely affects the lateral or vertical stability of the track with the exception of spot tamping an isolated condition where not more than 4.5 m (15 feet) of track are involved at any one time and the ambient air temperature is not above 35°C (95°F); and

(3) Removal and replacement of the rail fastenings on more than one tie at a time within 4.5 m (15 feet).

§ 299.303 Measuring track not under load.

When unloaded track is measured to determine compliance with requirements of this part, evidence of rail movement, if any, that occurs while the track is loaded shall be added to the measurements of the unloaded track.

§ 299.305 Drainage.

Each drainage or other water carrying facility under or immediately adjacent to the roadbed shall be maintained and kept free of obstruction, to accommodate expected water flow for the area concerned.

§ 299.307 Vegetation.

Vegetation on railroad property which is on or immediately adjacent to roadbed shall be controlled so that it does not—

(a) Become a fire hazard to track-carrying structures;

(b) Obstruct visibility of railroad signs and signals along the right-of-way;

(c) Interfere with railroad employees performing normal trackside duties;

(d) Prevent proper functioning of signal and communication lines; or

(e) Prevent railroad employees from visually inspecting moving equipment from their normal duty stations.

§ 299.309 Classes of track: operating speed limits.

(a) Except as provided in paragraph (b) of this section and as otherwise provided in this part, the following maximum allowable operating speeds apply—

TABLE 1 TO PARAGRAPH (a)

Over track that meets all of the requirements prescribed in this part for—	The maximum allowable operating speed in km/h (mph)
Class H0 track	20 (12)
Class H1 track	30 (19)

TABLE 1 TO PARAGRAPH (a)—Continued

Over track that meets all of the requirements prescribed in this part for—	The maximum allowable operating speed in km/h (mph)
Class H2 track	70 (44)
Class H3 track	120 (75)
Class H4 track	170 (106)
Class H5 track	230 (143)
Class H6 track	285 (177)
Class H7 track	330 (205)

(b) Except as provided in paragraph (c) of this section, if a segment of track does not meet all of the requirements for its intended Class, it is to be reclassified to the next lower track Class for which it does meet all of the requirements of this part. However, if the segment of track does not at least meet the requirements for track Class H1 track, operations may continue at Class H1 speeds for a period of not more than 30 days without bringing the track into compliance, under the authority of an individual designated under § 299.353, after that individual determines that operations may safely continue and subject to any limiting conditions specified by such individual.

(c) If a segment of track designated as track Class H0 does not meet all of the requirements for its intended class, operations may continue at Class H0 speeds for a period of not more than 30 days without bringing the track into compliance, under the authority of an individual designated under § 299.353, after that individual determines that operations may safely continue and subject to any limiting conditions specified by such individual.

(d) No high-speed passenger trainset shall operate over track Class H0.

§ 299.311 Track geometry; general.

If the values listed in the following table are exceeded, the railroad shall initiate remedial action. A reduction in operating speed so that the condition complies with the limits listed for a lower speed shall constitute bringing the track into compliance.

TABLE 1 TO § 299.311

Track geometry parameter (millimeter (mm))	Track class	H0	H1	H2	H3	H4	H5	H6	H7
Gauge is measured between the heads of the rails at right angles to the rails in a plane 14 mm (0.55 inches) below the top of the rail head and may not exceed—.	Min.	1429	1429	1429	1429	1429	1429	1429	1429
	Max.	1454	1454	1454	1454	1454	1454	1454	1454
The deviation from uniformity[1] of the mid-chord offset on either rail for a 10 meter (m) chord (alignment) may not be more than—.	10 m chord	38	31	31	14	12	10	8	7
The deviation from uniform profile on either rail at the mid-ordinate of a 10 m chord (surface) may not be more than—.	10 m chord	40	40	40	27	22	18	15	13
The deviation from uniform crosslevel at any point on tangent and curved track may not be more than—.	.....	50	26	26	22	18	14	9	9
The difference in crosslevel between any two points 2.5 meters (8.2 feet) apart (twist) may not be more than—.	2.5 m	26	26	26	22	18	14	9	9

[1] Uniformity for alignment at any point along the track is established by averaging the measured mid-chord offset values for a 10 m (32.8 feet) chord for nine consecutive points that are centered around that point and spaced at 2.5 m (8.2 feet) intervals.

§ 299.313 Track geometry; performance based.

(a) For all track of Class H4 and above, vibration in the lateral and vertical directions measured on the carbody of a vehicle representative of the service fleet traveling at a speed no less than 10 km/h (6.2 mph) below the maximum speed permitted for the class of track, shall not exceed the limits prescribed in the following table:

TABLE 1 TO PARAGRAPH (a)

Carbody acceleration limits[1 2]	
Lateral vibration[3]	Vertical vibration[3]
≤ 0.35 g peak-to-peak 1 sec window ..... excluding peaks < 50 msec.	≤ 0.45g peak-to-peak 1 sec window excluding peaks < 50 msec

[1] Carbody accelerations in the vertical and lateral directions shall be measured by accelerometers oriented and located in accordance with § 299.337(c)(3).

[2] Acceleration measurements shall be processed through an LPF with a minimum cut-off frequency of 10 Hz. The sample rate for acceleration data shall be at least 200 samples per second.

[3] Peak-to-peak accelerations shall be measured as the algebraic difference between the two extreme values of measured acceleration in any 1-second time period, excluding any peak lasting less than 50 milliseconds.

(b) If the carbody acceleration requirements are not met on a segment of track, the segment of track is to be reclassified to the next lower Class of track for which it does meet the requirements of this part.

§ 299.315 Curves; elevation and speed limitations.

(a) The maximum elevation of the outside rail of a curve may not be more than 200 mm (7-7/8 inches). The outside rail of a curve may not be lower than the inside rail by design, except when engineered to address specific track or operating conditions; the limits in § 299.311 apply in all cases.

(b) The maximum allowable posted timetable operating speed for each curve is determined by the following formula:

$$V_{\max} = \sqrt{\frac{(E_a + E_u)xR}{11.8}}$$

Where—

V_{max} = Maximum allowable posted timetable operating speed (km/h).

E_a = Actual elevation of the outside rail (mm). Actual elevation, E_a, for each 50-meter track segment in the body of the curve is determined by averaging the elevation for 11 points through the segment at 5-meter spacing. If the curve length is less than 50-meters, average the points through the full length of the body of the curve.

E_u = Qualified cant deficiency (mm) of the vehicle type.

R = Radius of curve (m). Radius of curve, R, is determined by averaging the radius of the curve over the same track segment as the elevation.

(c) All vehicles are considered qualified for operating on track with a cant deficiency, E_u, not exceeding 75 mm (3 inches).

(d) Each vehicle type must be approved by FRA, under § 299.609, to operate on track with a qualified cant deficiency, E_u, greater than 75 mm (3 inches). Each vehicle type must demonstrate in a ready-for-service load condition, compliance with the requirements of either paragraph (d)(1) or (2) of this section.

(1) When positioned on a track with a uniform superelevation equal to the proposed cant deficiency:

(i) No wheel of the vehicle unloads to a value less than 60 percent of its static value on perfectly level track; and

(ii) For passenger cars, the roll angle between the floor of the equipment and the horizontal does not exceed 8.6 degrees; or

(2) When operating through a constant radius curve at a constant speed corresponding to the proposed cant deficiency, and a test plan is submitted and approved by FRA in accordance with § 299.609(d)—

(i) The steady-state (average) load on any wheel, throughout the body of the curve, is not less than 60 percent of its static value on perfectly level track; and

(ii) For passenger cars, the steady-state (average) lateral acceleration measured on the floor of the carbody does not exceed 0.15g.

(e) The railroad shall transmit the results of the testing specified in paragraph (d) of this section to FRA in accordance with §§ 299.9 and 299.613 requesting approval under § 299.609(g) for the vehicle type to operate at the desired curving speeds allowed under the formula in paragraph (b) of this section. The request shall be made in writing and shall contain, at a minimum, the following information:

(1) A description of the vehicle type involved, including schematic diagrams of the suspension system(s) and the estimated location of the center of gravity above top of rail; and

(2) The test procedure, including the load condition under which the testing was performed, and description of the instrumentation used to qualify the vehicle type, as well as the maximum values for wheel unloading and roll angles or accelerations that were observed during testing.

Note 1 to paragraph (e)(2). The test procedure may be conducted whereby all the wheels on one side (right or left) of the vehicle are raised to the proposed cant deficiency and lowered, and then the vertical wheel loads under each wheel are measured and a level is used to record the angle through which the floor of the vehicle has been rotated.

(f) Upon FRA approval of the request to approve the vehicle type to operate at the desired curving speeds allowed under the formula in paragraph (b) of this section, the railroad shall notify FRA in accordance with § 299.9 in writing no less than 30 calendar days prior to the proposed implementation of the approved higher curving speeds allowed under the formula in paragraph (b) of this section. The notification shall contain, at a minimum, identification of the track segment(s) on which the higher curving speeds are to be implemented.

(g) As used in this section, and § 299.609, vehicle type means like vehicles with variations in their physical properties, such as suspension, mass, interior arrangements, and dimensions that do not result in significant changes to their dynamic characteristics.

§ 299.317 Track strength.

(a) Track shall have a sufficient vertical strength to withstand the maximum vehicle loads generated at maximum permissible trainset speeds, cant deficiencies and surface limitations. For purposes of this section, vertical track strength is defined as the track capacity to constrain vertical deformations so that the track shall, under maximum load, remain in compliance with the track performance and geometry requirements of this part.

(b) Track shall have sufficient lateral strength to withstand the maximum thermal and vehicle loads generated at maximum permissible trainset speeds, cant deficiencies and lateral alignment limitations. For purposes of this section lateral track strength is defined as the track capacity to constrain lateral deformations so that track shall, under maximum load, remain in compliance with the track performance and geometry requirements of this part.

§ 299.319 Track fixation and support.

(a) Crossties, if used shall be of concrete or composite construction, unless otherwise approved by FRA under § 299.15, for all tracks over which trainsets run in revenue service.

(b) Each 25 m (82 feet) segment of track that contains crossties shall have—

(1) A sufficient number of crossties to provide effective support that will—

(i) Hold gauge within limits prescribed in § 299.311;

(ii) Maintain surface within the limits prescribed in § 299.311;

(iii) Maintain alignment within the limits prescribed in § 299.311; and

(iv) Maintain longitudinal rail restraint.

(2) The minimum number and type of crossties specified in paragraph (b)(4) of this section and described in paragraph (c) or (d) of this section, as applicable, effectively distributed to support the entire segment;

(3) At least one non-defective crosstie of the type specified in paragraphs (c) and (d) of this section that is located at a joint location as specified in paragraph (e) of this section; and

(4) The minimum number of crossties as indicated in the following table:

TABLE 1 TO PARAGRAPH (b)(4)

Minimum number of non-defective crossties			
Track class	Other than on non-ballasted bridge & turnout	Non-ballasted bridge	Turnout
H0	20	26	24
H1	28	36	33
H2	31, unless inside a TMF, then 28	36	33
H3	35	40	37
H4–H7	39	45	41

(c) Crossties, other than concrete, counted to satisfy the requirements set forth in paragraph (b)(4) of this section shall not be—

(1) Broken through;

(2) Split or otherwise impaired to the extent the crossties will allow the ballast to work through, or will not hold spikes or rail fasteners;

(3) Deteriorated so that the tie plate or base of rail can move laterally 9.5 mm (3/8 inch) relative to the crossties;

(4) Cut by the tie plate through more than 40 percent of a crosstie's thickness;

(5) Configured with less than 2 rail holding spikes or fasteners per tie plate; or

(6) Unable, due to insufficient fastener toeload, to maintain longitudinal restraint and maintain rail hold down and gauge.

(d) Concrete crossties counted to satisfy the requirements set forth in paragraph (b)(4) of this section shall not be—

(1) Broken through or deteriorated to the extent that prestressing material is visible;

(2) Deteriorated or broken off in the vicinity of the shoulder or insert so that the fastener assembly can either pull out or move laterally more than 9.5 mm (3/8 inch) relative to the crosstie;

(3) Deteriorated such that the base of either rail can move laterally more than 9.5 mm (3/8 inch) relative to the crosstie;

(4) Deteriorated so that rail seat abrasion is sufficiently deep so as to cause loss of rail fastener toeload;

(5) Deteriorated such that the crosstie's fastening or anchoring system is unable to maintain longitudinal rail restraint, or maintain rail hold down, or maintain gauge due to insufficient fastener toeload; or

(6) Configured with less than two fasteners on the same rail.

(e) Classes H0 and H1 track shall have one crosstie whose centerline is within 0.61 m (24 inches) of each rail joint (end) location. Classes H2 and H3 track shall have one crosstie whose centerline is within 0.46 m (18 inches) of each rail joint (end) location. Classes H4–H7 track shall have one crosstie whose centerline is within 0.32 m (12.6 inches) of each rail joint (end) location. The relative position of these crossties is described in the following three diagrams:

(1) Each rail joint in Classes H0 and H1 track shall be supported by at least one crosstie specified in paragraphs (c) and (d) of this section whose centerline is within 1.22 m (48 inches) as shown in Figure 1 to this paragraph.

Figure 1 to paragraph (e)(1) - Classes H0 and H1

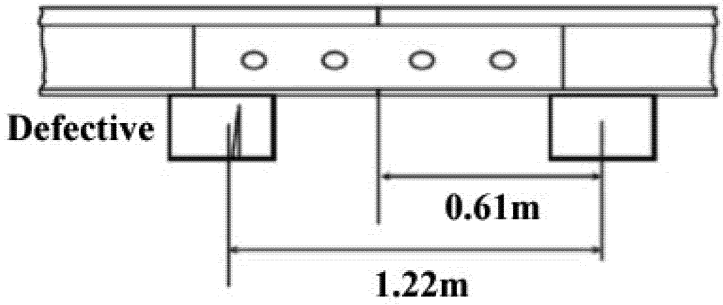

(2) Each rail joint in Classes H2 and H3 track shall be supported by at least one crosstie specified in paragraphs (c) and (d) of this section whose centerline is within 0.92 m (36.2 inches) as shown in Figure 2 to this paragraph.

Figure 2 to paragraph (e)(2) - Classes H2 and H3

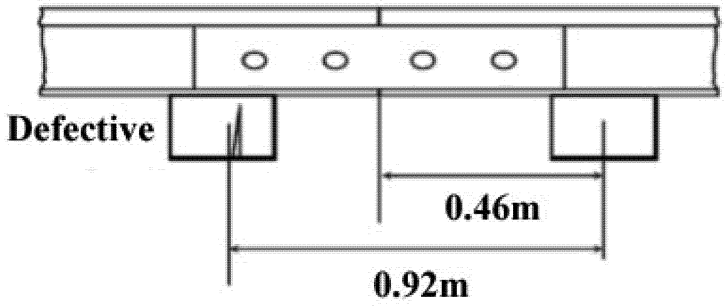

(3) Each rail joint in Classes H4–H7 track shall be supported by at least one crosstie specified in paragraphs (c) and (d) of this section whose centerline is within 0.64 m (25.2 inches) as shown in Figure 3 to this paragraph.

Figure 3 to paragraph (e)(3) - Classes H4 - H7

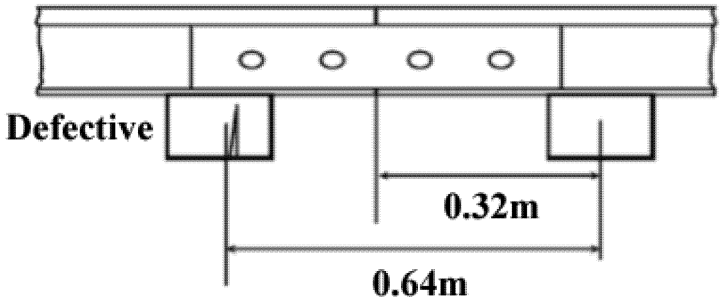

(f) In Class H3 track there shall be at least two non-defective ties each side of a defective tie.

(g) In Classes H4 to H7 track and at any expansion joints there shall be at least three non-defective ties each side of a defective tie.

(h) Defective ties shall be replaced in accordance with the railroad's inspection, testing, and maintenance program.

(i) Track shall be fastened by a system of components that effectively maintains gauge within the limits prescribed in § 299.311. Each component of each such system shall be evaluated to determine whether gauge is effectively being maintained.

(j) For track constructed without crossties, such as slab track and track connected directly to bridge structural components, track over servicing pits, etc., the track structure shall be sufficient to maintain the geometry limits specified in § 299.311.

§ 299.321 Defective rails.

(a) The railroad's inspection, testing, and maintenance program shall include a description of defective rails consistent with the practice on the Tokaido Shinkansen system. The inspection, testing, and maintenance program shall include identification of rail defect types, definition of the inspection criteria, time required for verification and the corresponding remedial action.

(b) When the railroad learns that a rail in that track contains any of the defects listed in the railroad's inspection, testing, and maintenance program, a person designated under § 299.353 or § 299.355 shall determine whether the track may continue in use. If the designated person determines that the track may continue in use, operation over the defective rail is not permitted until—

(1) The rail is replaced or repaired; or

(2) The remedial action prescribed in the inspection, testing, and maintenance program is initiated.

§ 299.323 Continuous welded rail (CWR) plan.

(a) The railroad shall have in effect and comply with a plan that contains written procedures which address: The installation, adjustment, maintenance, and inspection of CWR; and inspection of CWR joints.

(b) The railroad shall file its CWR plan with FRA pursuant to § 299.9. The initial CWR plan shall be filed 60 days prior to installation of any CWR track. The effective date of the plan is the date the plan is filed with FRA.

(c) The railroad's existing plan shall remain in effect until the railroad's new plan is developed and filed with FRA.

§ 299.325 Continuous welded rail (CWR); general.

The railroad shall comply with the contents of the CWR plan developed under § 299.323. The plan shall contain the following elements—

(a) Procedures for the installation and adjustment of CWR which include—

(1) Designation of a desired rail installation temperature range for the geographic area in which the CWR is located;

(2) De-stressing procedures/methods which address proper attainment of the desired rail installation temperature range when adjusting CWR; and

(3) Glued insulated or expansion joint installation and maintenance procedures.

(b) Rail anchoring, if used, or fastening requirements that will provide sufficient restraint to limit longitudinal rail and crosstie movement to the extent practical, and that specifically address

CWR rail anchoring or fastening patterns on bridges, bridge approaches, and at other locations where possible longitudinal rail and crosstie movement associated with normally expected trainset-induced forces—is restricted.

(c) CWR joint installation and maintenance procedures.

(d) Procedures which specifically address maintaining a desired rail installation temperature range when cutting CWR including rail repairs, in-track welding, and in conjunction with adjustments made in the area of tight track, a track buckle, or a pull-apart.

(e) Procedures which control trainset speed on CWR track when—

(1) Maintenance work, track rehabilitation, track construction, or any other event occurs which disturbs the roadbed or ballast section and reduces the lateral or longitudinal resistance of the track; and

(2) The difference between the rail temperature and the rail neutral temperature is in a range that causes buckling-prone conditions to be present at a specific location.

(f) Procedures which prescribe when and where physical track inspections are to be performed under extreme temperature conditions.

(g) Scheduling and procedures for inspections to detect cracks and other indications of potential failures in CWR joints.

(h) The railroad shall have in effect a comprehensive training program for the application of these written CWR procedures, with provisions for periodic retraining for those individuals designated as qualified in accordance with this subpart to supervise the installation, adjustment, and maintenance of CWR track and to perform inspections of CWR track.

(i) The plan shall prescribe and require compliance with recordkeeping requirements necessary to provide an adequate history of track constructed with CWR. At a minimum, these records shall include—

(1) The rail laying temperature, location, and date of CWR installations. Each record shall be retained until the rail neutral temperature has been adjusted; and

(2) A record of any CWR installation or maintenance work that does not conform to the written procedures. Such record must include the location of the rail and be maintained until the CWR is brought into conformance with such procedures.

§ 299.327 Rail end mismatch.

Any mismatch of rails at joints may not be more than that prescribed by the following table:

TABLE 1 TO § 299.327

Track class	Any mismatch of rails at joints may not be more than the following:	
	On the tread of the rail ends (mm)	On the gauge side of the rail ends (mm)
H0	6	5
H1–H2	4	4
H3–H7	2	2

§ 299.329 Rail joints and torch cut rails.

(a) Each rail joint, insulated joint, expansion joint, and compromise joint shall be of a structurally sound design and appropriate dimensions for the rail on which it is applied.

(b) If a joint bar is cracked, broken, or permits excessive vertical movement of either rail when all bolts are tight, it shall be replaced.

(c) Except for glued-insulated joints, each joint bar shall be held in position by track bolts tightened to allow the joint bar to firmly support the abutting rail ends. For track Classes H0 to H3 track bolts shall be tightened, as required, to allow longitudinal movement of the rail in the joint to accommodate expansion and contraction due to temperature variations.

(d) Except as provided in paragraph (e) of this section, each rail shall be bolted with at least two bolts at each joint.

(e) Clamped joint bars may be used for temporary repair during emergency situations, and speed over that rail end and the time required to replace the joint bar must not exceed the limits specified in the inspection, testing, and maintenance program.

(f) No rail shall have a bolt hole which is torch cut or burned.

(g) No joint bar shall be reconfigured by torch cutting.

(h) No rail having a torch cut or flame cut end may be used.

§ 299.331 Turnouts and crossings generally.

(a) In turnouts and track crossings, the fastenings shall be intact and maintained to keep the components securely in place. Also, each switch, frog, and guard rail shall be kept free of obstructions that may interfere with the passage of wheels. Use of rigid rail crossings at grade is limited to track Classes H0, H1, and H2.

(b) The track through and on each side of track crossings and turnouts shall be designed to restrain rail movement affecting the position of switch points and frogs.

(c) Each flangeway at turnouts shall be at least 39 mm (1.5 inches) wide.

(d) For all turnouts and track crossings, the railroad shall prepare inspection and maintenance requirements to be included in the railroad's inspection, testing, and maintenance program.

§ 299.333 Frog guard rails and guard faces; gauge.

The guard check and guard face gages in frogs shall be within the limits prescribed in the following table:

TABLE 1 TO § 299.333

Track class	Guard check gage The distance between the gauge line of a frog to the guard line [1] of its guard rail or guarding face, measured across the track at right angles to the gauge line,[2] may not be less than—	Guard face gage The distance between the guard lines,[1] measured across the track at right angles to the gauge line,[2] may not be more than—
H0–H7	1,393 mm	1,358 mm.

[1] A line along that side of the flangeway which is nearer to the center of the track and at the same elevation as the gage line.
[2] A line 14 mm (0.55 inches) below the top of the center line of the head of the running rail, or corresponding location of the tread portion of the track structure.

Figure 1 to § 299.333 – Guard Check and Guard Face Gage Measurement (Top View)

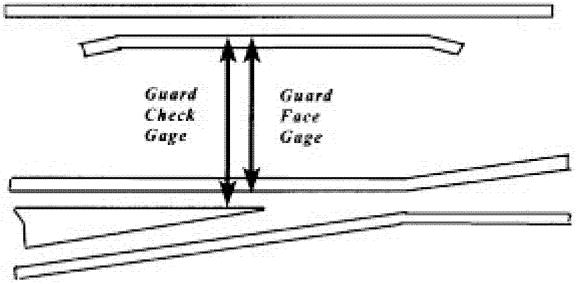

Figure 2 to § 299.333 – Guard Check and Guard Face Gage Measurement (In line with rail view)

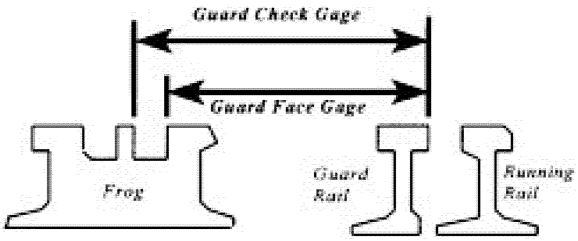

§ 299.335 Derails.

(a) Derails shall be installed at locations where maintenance-of-way equipment can access track other than Class H0, in a configuration intended to derail the un-controlled equipment away from the mainline and at a distance from the point of intersection with the mainline that will not foul the dynamic envelope of the mainline.

(b) Each derail shall be clearly visible to railroad personnel operating rail equipment on the affected track and to railroad personnel working adjacent to the affected track. When in a locked position, a derail shall be free of any lost motion that would allow it to be operated without removal of the lock.

(c) Each derail shall be maintained and function as intended.

(d) Each derail shall be properly installed for the rail to which it is applied.

(e) If a track is equipped with a derail it shall be in the derailing position except as provided in the railroad's operating rules, special instructions, or changed to permit movement.

§ 299.337 Automated vehicle-based inspection systems.

(a) A qualifying Track Geometry Measurement System (TGMS) and a qualifying Track Acceleration Measurement System (TAMS) shall be operated over the route at the following frequency:

(1) For track Class H3, at least twice per calendar year with not less than 120 days between inspections; and

(2) For track Classes H4, H5, H6, and H7, at least twice within any 60-day period with not less than 12 days between inspections.

(b) The qualifying TGMS shall meet or exceed minimum design requirements which specify that—

(1) Track geometry measurements shall be taken no more than 1 meter (3.3 feet) away from the contact point of wheels carrying a vertical load of no less than 4,500 kg (10,000 lb) per wheel;

(2) Track geometry measurements shall be taken and recorded on a distance-based sampling interval not exceeding 0.60 m (2 feet), preferably 0.30 m (1 foot);

(3) Calibration procedures and parameters are assigned to the system which assures that measured and recorded values accurately represent track conditions. Track geometry measurements recorded by the system shall not differ on repeated runs at the same site at the same speed more than 3 mm (⅛ inch); and

(4) The TGMS shall be capable of measuring and processing the necessary track geometry parameters to determine compliance with §§ 299.311 and 299.315.

(c) A qualifying TAMS shall be on a vehicle having dynamic response characteristics that are representative of other vehicles assigned to the service and shall—

(1) Be operated at the revenue speed profile in accordance with § 299.309;

(2) Be capable of measuring and processing carbody acceleration parameters to determine compliance with Carbody Acceleration Limits per § 299.313; and

(3) Monitor lateral and vertical accelerations of the carbody. The accelerometers shall be attached to the carbody on or under the floor of the vehicle, as near the center of a bogie as practicable.

(d) The qualifying TGMS and TAMS shall be capable of producing, within 24 hours of the inspection, output reports that—

(1) Provide a continuous plot, on a constant-distance axis, of all measured track geometry and carbody acceleration parameters required in paragraph (b) and (c) of this section;

(2) Provide an exception report containing a systematic listing of all track geometry and all acceleration conditions which constitute an exception to the class of track over the segment surveyed.

(e) The output reports required under paragraph (d) of this section shall contain sufficient location identification information which enables field personnel to easily locate indicated exceptions.

(f) Following a track inspection performed by a qualifying TGMS or TAMS, the railroad shall, institute remedial action for all exceptions to the class of track in accordance with the railroad's inspection, testing, and maintenance program.

(g) The railroad shall maintain for a period of one year following an inspection performed by a qualifying TGMS and TAMS, a copy of the plot and the exception report for the track segment involved, and additional records which—

(1) Specify the date the inspection was made and the track segment involved; and,

(2) Specify the location, remedial action taken, and the date thereof, for all listed exceptions to the class.

§ 299.339 Daily sweeper inspection.

A sweeper vehicle shall be operated each morning after the overnight maintenance over all tracks except track Class H2 in stations, prior to commencing revenue service over that track. The sweeper vehicle shall operate at a speed no greater than 120 km/h (75 mph) to conduct a visual inspection to ensure the right-of-way is clear of obstacles within the clearance envelope and to identify conditions that could cause accidents, and shall have a minimum clearance of no less than 35 mm above top of rail.

§ 299.341 Inspection of rail in service.

(a) Prior to revenue service the railroad shall submit written procedures for the inspection of rails in accordance with the inspection, testing, and maintenance program.

(b) On track Classes H4 to H7, and H2 within stations, a continuous search for internal defects shall be made of all rail within 180 days after initiation of revenue service and, thereafter, at least annually, with not less than 240 days between inspections.

(c) Each defective rail shall be marked with a highly visible marking on both sides of the rail.

(d) Inspection equipment shall be capable of detecting defects between joint bars and within the area enclosed by joint bars.

(e) If the person assigned to operate the rail defect detection equipment being used determines that, due to rail surface conditions, a valid search for internal defects could not be made over a particular length of track, the test on that particular length of track cannot be considered as a search for internal defects under this section.

(f) When the railroad learns, through inspection or otherwise, that a rail in that track contains any of the defects in accordance with § 299.321, a qualified individual designated under § 299.353 or § 299.355 shall determine whether or not the track may continue in use. If the qualified individual so designated determines that the track may continue in use, operation over the defective rail is not permitted until—

(1) The rail is replaced; or

(2) The remedial action as prescribed in § 299.321 has been taken.

(g) The person assigned to operate the rail defect detection equipment must be a qualified operator as defined in this subpart and have demonstrated proficiency in the rail flaw detection process for each type of equipment the operator is assigned.

§ 299.343 Initial inspection of new rail and welds.

(a) The railroad shall provide for the initial inspection of newly manufactured rail, and for initial inspection of new welds made in either new or used rail. The railroad may demonstrate compliance with this section by providing for—

(1) *Mill inspection.* A continuous inspection at the rail manufacturer's mill shall constitute compliance with the requirement for initial inspection of new rail, provided that the inspection equipment meets the applicable requirements as specified under the railroad's inspection, testing, and maintenance program and § 299.321. The railroad shall obtain a copy of the manufacturer's report of inspection and retain it as a record until the rail receives its first scheduled inspection under § 299.341;

(2) *Welding plant inspection.* A continuous inspection at a welding plant, if conducted in accordance with the provisions of paragraph (a)(1) of this section, and accompanied by a plant operator's report of inspection which is retained as a record by the railroad, shall constitute compliance with the requirements for initial inspection of new rail and plant welds, or of new plant welds made in used rail; and

(3) *Inspection of field welds.* Initial inspection of new field welds, either those joining the ends of CWR strings or those made for isolated repairs, shall be conducted before the start of revenue service in accordance with the railroad's inspection, testing, and maintenance program. The initial inspection may be conducted by means of portable test equipment. The railroad shall retain a record of such inspections until the welds receive their first scheduled inspection under § 299.341.

(b) Each defective rail found during inspections conducted under paragraph (a)(3) of this section shall be marked with highly visible markings on both sides of the rail and the appropriate remedial action as set forth in § 299.341 will apply.

§ 299.345 Visual inspections; right of way.

(a) *General.* All track shall be visually inspected in accordance with the schedule prescribed in paragraph (c) of this section by an individual qualified under this subpart. The visual inspection shall be conducted in accordance with the requirements set forth in the inspection, testing, and maintenance program under subpart G of this part.

(b) *Inspection types and frequency*—

(1) *Safe walkway inspection.* Except for track located inside trainset maintenance facilities and MOW yards and the associated portions of the right-of-way, the right-of-way and all track shall be inspected from the safe walkway during daytime hours, in accordance with the following conditions:

(i) Ballasted track shall be inspected at least once every two weeks, with a minimum of six calendar days in between inspections.

(ii) Non-ballasted track shall be inspected at least once every four weeks, with a minimum of twelve calendar days in between inspections.

(iii) No two consecutive visual inspections from the safe walkway shall be performed from the same safe walkway. Safe walkway inspections shall alternate between safe walkways on each side of the right-of-way.

(iv) In stations, the safe walkway inspection may be performed from either the safe walkway or the station platform.

(v) An additional on-track visual inspection conducted during maintenance hours under paragraph (b)(2) of this section performed in place of a visual inspection from the safe walkway under paragraph (b)(1) of this section will satisfy the visual inspection requirement of paragraph (b)(1) of this section. However, a safe walkway visual inspection performed under paragraph (b)(1) of this section cannot replace an on-track visual inspection conducted during maintenance hours under paragraph (b)(2) of this section.

(vi) Except for paragraph (b)(1)(v) of this section, inspections performed under paragraph (b)(1) of this section shall not occur during the same week as inspections performed under paragraph (b)(2) of this section.

(vii) In the event a safe walkway visual inspection is not possible on a given day due to extreme weather, the inspection may be conducted from the cab of a trainset or as an on-track visual inspection on that day in accordance with the inspection, testing, and maintenance program.

(2) *On-track inspections; other than trainset maintenance facilities and MOW yards.* Except for track located inside trainset maintenance facilities and MOW yards and the associated portions of the right-of-way, on-track visual inspections, conducted on foot during maintenance hours, shall be performed on all track in accordance with the following conditions:

(i) Ballasted track shall be inspected at least once every two weeks, with a minimum of six calendar days in between inspections.

(ii) Non-ballasted track shall be inspected at least once every four weeks, with a minimum of twelve calendar days in between inspections.

(iii) Turn-outs and track crossings on ballasted track shall be inspected at least once a week, with a minimum of three calendar days in between inspections.

(iv) Turn-outs and track crossings on non-ballasted track shall be inspected at least once every two weeks, with a minimum of six calendar days in between inspections.

(3) *On-track inspections; trainset maintenance facilities and MOW yards.* For track located inside trainset maintenance facilities and MOW yards and the associated portions of the right-of-way, including turn-outs and track crossings, on-track visual inspections, conducted on foot, shall be performed on all track in accordance with the following conditions:

(i) Ballasted track shall be inspected at least once during any 60-day period, with a minimum of twelve calendar days in between inspections.

(ii) Non-ballasted track shall be inspected at least once within any 120-day period, with a minimum of twenty-four calendar days in between inspections.

(iii) On-track safety shall be established in accordance with 49 CFR part 214 of this chapter, except for 49 CFR 214.339.

(4) *Visual inspections from trainset cab.* Visual inspections from trainset cab shall be performed for the right-of-way and track for track Class H3 and above, except for track leading to a trainset maintenance facility, at least twice weekly with a minimum of two calendar days between inspections.

(c) If a deviation from the requirements of this subpart is found during the visual inspection, remedial action shall be initiated immediately in accordance with the railroad's inspection, testing, and maintenance program required under subpart G of this part.

§ 299.347 Special inspections.

(a) In the event of fire, flood, severe storm, temperature extremes, or other occurrence which might have damaged track structure, a special inspection shall be made of the track and right-of-way involved as soon as possible after the occurrence, prior to the operation of any trainset over that track.

(b) Should a trainset be between stations when an event such as those described in paragraph (a) of this section occurs, that trainset may proceed to the next forward station at restricted speed, in accordance with the railroad's operating rules and inspection, testing, and maintenance program.

§ 299.349 Inspection records.

(a) The railroad shall keep a record of each inspection required to be performed on that track under this subpart.

(b) Except as provided in paragraph (f) of this section, each record of an inspection under §§ 299.325 and 299.345 shall be prepared on the day the inspection is made and signed by the person making the inspection.

(c) Records shall specify the track inspected, date of inspection, location, and nature of any deviation from the requirements of this part, name of qualified individual who made the inspection, and the remedial action, if any, taken by the person making the inspection.

(d) Rail inspection records shall specify the date of inspection, the location and nature of any internal defects found, name of qualified individual who made the inspection, the remedial action taken and the date thereof, and the location of any intervals of track not tested pursuant to § 299.341 of this part. The railroad shall retain a rail inspection record for at least two years after the inspection and for one year after remedial action is taken.

(e) The railroad shall make inspection records required by this section available for inspection and copying by the FRA.

(f) For purposes of compliance with the requirements of this section, the railroad may maintain and transfer records through electronic transmission, storage, and retrieval provided that—

(1) The electronic system is compliant with the requirements of § 299.11;

(2) The electronic storage of each record shall be initiated by the person making the inspection within 24 hours following the completion of that inspection; and

(3) Track inspection records shall be kept available to persons who performed the inspection and to persons performing subsequent inspections.

(g) Each track/vehicle performance record required under § 299.337 shall be made available for inspection and copying by the FRA.

§ 299.351 Qualifications for track maintenance and inspection personnel.

(a) *General.* The railroad shall designate qualified individuals responsible for the maintenance and inspection of track in compliance with the safety requirements prescribed in this subpart. Each designated individual, including contractors and their employees, must meet the minimum qualifications set forth in this subpart.

(b) *Recordkeeping.* In addition to the requirements contained in § 243.203 of this chapter, the railroad shall also maintain, with respect to the designation of individuals under this subpart, the track inspection records made by each individual as required by § 299.349.

§ 299.353 Personnel qualified to supervise track restoration and renewal.

Each individual designated to supervise restorations and renewals of track, shall have—

(a) Successfully completed a course offered by the employer or by a college level engineering program, supplemented by special on-the-job training emphasizing the techniques to be employed in the supervision, restoration, and renewal of high-speed track;

(b) Demonstrated to the railroad, at least once per calendar year, that the individual—

(1) Knows and understands the requirements of this subpart that apply to the restoration and renewal of the track for which he or she is responsible;

(2) Can detect deviations from those requirements; and

(3) Can prescribe appropriate remedial action to correct or safely compensate for those deviations.

(c) Written authorization from the railroad or the employer to prescribe remedial actions to correct or safely compensate for deviations from the requirements of this subpart and shall have successfully completed a recorded examination on this subpart as part of the qualification process.

§ 299.355 Personnel qualified to inspect track.

Each individual designated to inspect track for defects, shall have—

(a) Successfully completed a course offered by the railroad or by a college level engineering program, supplemented by special on-the-job training emphasizing the techniques to be employed in the inspection of high-speed track;

(b) Demonstrated to the railroad, at least once per calendar year, that the individual—

(1) Knows and understands the requirements of this subpart that apply to the inspection of the track for which he or she is responsible;

(2) Can detect deviations from those requirements; and

(3) Can prescribe appropriate remedial action to correct or safely compensate for those deviations.

(c) Written authorization from the railroad or the employer to prescribe remedial actions to correct or safely compensate for deviations from the requirements in this subpart and shall have successfully completed a recorded examination on this subpart as part of the qualification process.

§ 299.357 Personnel qualified to inspect and restore continuous welded rail.

Individuals designated under § 299.353 or 299.355 that inspect continuous welded rail (CWR) or supervise the installation, adjustment, and maintenance of CWR in accordance with the written procedures established by the railroad shall have—

(a) Current qualifications under either § 299.353 or 299.355;

(b) Successfully completed a training course of at least eight hours duration specifically developed for the application of written CWR procedures issued by the railroad;

(c) Demonstrated to the railroad that the individual—

(1) Knows and understands the requirements of those written CWR procedures;

(2) Can detect deviations from those requirements; and

(3) Can prescribe appropriate remedial action to correct or compensate for those deviations safely.

(d) Written authorization from the railroad or the employer to prescribe remedial actions to correct or safely compensate for deviations from the requirements in those procedures and must have successfully completed a recorded examination on those procedures as part of the qualification process. The recorded examination may be written, or in the form of a computer file with the results of an interactive training course.

Subpart D—Rolling Stock

§ 299.401 Clearance requirements.

(a) *General.* The rolling stock shall be designed to meet all applicable clearance requirements of the railroad. The railroad shall make its clearance diagrams available to FRA upon request.

(b) *Clearance above top of rail.* No part or appliance of a trainset except the wheels, sander tips, wheel guards, and other components designed to be in the path of the wheel (*i.e.,* above the rail and aligned inside the wheel width path) may be less than 60 mm (2.36 inches) above the top of rail.

(c) *Obstacle deflector.* The leading end of a trainset shall be equipped with an obstacle deflector that extends across both rails of the track. The minimum clearance above the rail of the obstacle deflector shall be 76 mm (3 inches), and the maximum clearance shall be 229 mm (9 inches).

(d) *Flexible wheel guards.* The lead axle of a trainset shall be equipped with flexible wheel guards mounted on the bogie below the primary suspension with a maximum clearance above the rail of 15 mm (0.59 inches).

§ 299.403 Trainset structure.

(a) *Occupied volume integrity.* To demonstrate resistance to loss of occupied volume, the trainsets shall comply with both the compression load requirement in paragraph (b) of this section and the dynamic collision requirements in paragraph (c) of this section.

(b) *Compression load requirement.* The end compression load shall be applied to the vehicle as defined in JIS E 7105:2006(E) as amended by JIS E 7105:2011(E) (all incorporated by reference, see § 299.17), with an end load magnitude no less than 980 kN (220,300 lbf) without permanent deformation of the occupied volume.

(c) *Dynamic collision scenario.* In addition to the requirements of paragraph (b) of this section, occupied volume integrity shall also be demonstrated for the trainset through an evaluation of a dynamic collision scenario in which a moving trainset impacts a proxy object under the following conditions:

(1) The initially-moving trainset is made up of the equipment undergoing evaluation at its AW0 ready-to-run weight.

(2) The scenario shall be evaluated on tangent, level track.

(3) The trainset shall have an initial velocity of 32 km/h (20 mph) and shall not be braked.

(4) The proxy object shall have the following characteristics:

(i) The object shall be a solid circular cylinder that weighs 6350 kg (14,000 pounds);

(ii) The object shall have a width of 914 mm (36 inches) and a diameter of 1219 mm (48 inches);

(iii) The axis of the cylinder shall be perpendicular to the direction of trainset motion and parallel to the ground; and

(iv) The center of the object shall be located 762 mm (30 inches) above the top of the underframe.

(5) Two collision configurations shall be evaluated.

(i) The center of the object shall be located 483 mm (19 inches) from the longitudinal centerline of the trainset; and

(ii) The center of the object shall be aligned with the side of the cab car at the point of maximum width.

(6) The model used to demonstrate compliance with the dynamic collision requirements must be validated. Model validation shall be demonstrated and submitted to FRA for review and approval.

(7) As a result of the impact described in paragraphs (c)(5)(i) and (ii) of this section—

(i) One of the following two conditions must be met for the occupied volume:

(A) There shall be no more than 254 mm (10 inches) of longitudinal permanent deformation; or

(B) Global vehicle shortening shall not exceed 1 percent over any 4.6 m (15-feet) length of occupied volume.

(ii) Compliance with each of the following conditions shall also be demonstrated for the cab after the impact:

(A) Each seat provided for an employee regularly assigned to occupy the cab, and any floor-mounted seat in the cab, shall maintain a survival space where there is no intrusion for a minimum of 305 mm (12 inches) from each edge of the seat. Walls or other items originally within this defined space shall not further intrude more than 38 mm (1.5 inches) towards the seat under evaluation.

(B) There shall be a clear exit path for the occupants of the cab;

(C) The vertical height of the cab (floor to ceiling) shall not be reduced by more than 20 percent; and

(D) The operating console shall not have moved closer to the driver's seat by more than 51 mm (2 inches).

(d) *Equipment override.* (1) Using the dynamic collision scenarios described in paragraph (c) of this section, and with all units in the trainset positioned at their nominal running heights, the anti-climbing performance shall be evaluated for each of the following sets of initial conditions:

(2) For the initial conditions specified in paragraphs (c)(1) through (3) of this section, compliance with the following conditions shall be demonstrated after a dynamic impact:

(i) The relative difference in elevation between the underframes of the connected equipment shall not change by more than 102 mm (4 inches); and

(ii) The tread of any wheel of the trainset shall not rise above the top of rail by more than 102 mm (4 inches).

(e) *Roof and side structure integrity.* To demonstrate roof and side structure integrity, each passenger car shall comply with the following:

(1) *Rollover strength.* (i) Each passenger car shall be designed to rest on its side and be uniformly supported at the top and bottom cords of the vehicle side. The allowable stress in the structural members of the occupied volumes for this condition shall be one-half yield or one-half the critical buckling stress, whichever is less. Local yielding to the outer skin of the passenger car is allowed provided that the resulting deformations in no way intrude upon the occupied volume of the car.

(ii) Each passenger car shall also be designed to rest on its roof so that any damage in occupied areas is limited to roof extrusions. Other than roof extrusions, the allowable stress in the structural members of the occupied volumes for this condition shall be one-half yield or one-half the critical buckling stress, whichever is less. Local yielding to the outer skin, including the floor structure, of the car is allowed provided that the resulting deformations in no way intrude upon the occupied volume of the car. Deformation to the roof extrusions is allowed to the extent necessary to permit the vehicle to be supported directly on the top chords of the sides and ends.

(2) *Side structure.* (i) The sum of the section moduli about a longitudinal axis, taken at the weakest horizontal section between the side sill and roof, of the extrusions on each side of the car located between the inside edge of the doors shall be not less than 3.95 x 105 mm^3 (24.1 in^3).

(ii) The sum of the section moduli about a transverse axis, taken at the weakest horizontal section on each side of the car located between body corners shall be not less than 2.64 x 105 mm^3 (16.1 in^3).

(iii) The minimum section moduli or thicknesses specified in paragraph (f)(2)(i) of this section shall be adjusted in proportion to the ratio of the yield strength of the material used to a value of 172 MPa (25 ksi).

(iv) The combined thickness of the skin of the side structure extrusions shall not be less than 3 mm (0.125 inch) nominal thickness. The thicknesses shall be adjusted in proportion to the ratio of the yield strength of the material used to a value of 172 MPa (25 ksi).

(f) *Bogie-to-carbody attachment.* (1) The bogie-to-carbody attachment shall utilize the service-proven design as used on the N700.

(2) The bogie shall be securely attached to the carbody and designed to operate without failure under the operating conditions of the railroad, including expected mechanical shocks and vibrations.

§ 299.405 Trainset interiors.

(a) *Interior fittings.* Interior fittings of trainsets shall be—

(1) Securely attached and designed to operate without failure under the conditions typically found in passenger rail equipment including expected mechanical vibrations, and shock.

(2) To the extent possible, all interior fittings shall be recessed or flush mounted. Corners and/or sharp edges shall be either avoided or padded to mitigate the consequence of impact with such surfaces.

(b) *Luggage stowage.* (1) Luggage stowage racks shall slope downward in the outboard direction at a minimum ratio of 1:8 with respect to a horizontal plane to provide lateral restraint for stowed articles.

(2) Luggage stowage compartments shall provide longitudinal restraint for stowed articles.

§ 299.407 Glazing.

(a) *General.* The railroad shall install glazing systems compliant with the requirements defined in this section.

(b) *Trainset glazing; end-facing.* (1) Each end-facing exterior window of the trainset shall comply with the requirements for large object and ballistic impact scenarios as defined in this section.

(2) Each end-facing exterior window of the trainset shall demonstrate compliance with the following requirements for the large object impact test.

(i) The glazing article shall be impacted with a cylindrical projectile that complies with the following design specifications as depicted in Figure 1 to paragraph (b)(2)(i)(D) of this section:

(A) The projectile shall be constructed of aluminum alloy such as ISO 6362–2:1990, grade 2017A, or its demonstrated equivalent;

(B) The projectile end cap shall be made of steel;

(C) The projectile assembly shall weigh 1 kilogram (kg) (−0, +0.020 kg) or 2.2 lbs (−0, +0.044 lbs) and shall have a hemispherical tip. Material may be removed from the interior of the aluminum portion to adjust the projectile mass according to the prescribed tolerance. The hemispherical tip shall have a milled surface with 1 mm (0.04 inches) grooves; and

(D) The projectile shall have an overall diameter of 94 mm (3.7 inches) with a nominal internal diameter of 70 mm (2.76 inches).

Figure 1 to paragraph (b)(2)(i)(D) - Large Object Glazing Test Projectile

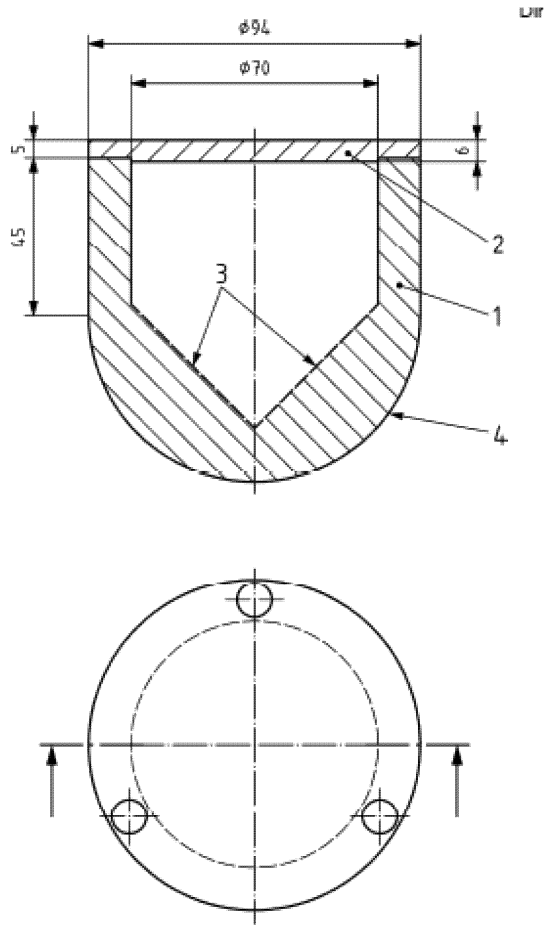

Key

1 projectile in aluminium alloy (ISO 6362-2:1990, grade 2017A)
2 steel projectile cover
3 material may be removed for adjustment purposes
4 milled surface of hemispheric tip (1 mm)

(ii) The test of the glazing article shall be deemed satisfactory if the test projectile does not penetrate the glazing article, the glazing article remains in its frame, and the witness plate is not marked by spall.

(iii) A new projectile shall be used for each test.

(iv) The glazing article to be tested shall be that which has the smallest area for each design type. For the test, the glazing article shall be fixed in a frame of the same construction as that mounted on the vehicle.

(v) A minimum of four tests shall be conducted and all must be deemed satisfactory. Two tests shall be conducted with the complete glazing article at 0 °C ± 0.5 °C (32 °F ± 0.9 °F) and two tests shall be conducted with the complete glazing article at 20 °C ± 5 °C (68 °F ± 9 °F). For the tests to be valid it shall be demonstrated that the core temperature of the complete glazing article during each test is within the required temperature range.

(vi) The test glazing article shall be mounted at the same angle relative to the projectile path as it will be to the direction of travel when mounted on the vehicle.

(vii) The projectile's impact velocity shall equal the maximum operating speed of the trainset plus 160 km/h (100 mph). The projectile velocity shall be measured within 4 m (13 feet) of the point of impact.

(viii) The point of impact shall be at the geometrical center of the glazing article.

(3) Representative samples for large object impact testing of large end-facing cab glazing articles may be used, instead of the actual design size provided that the following conditions are met:

(i) Testing of glazing articles having dimensions greater than 1,000 mm by 700 mm (39.4 by 27.6 inches), excluding framing, may be performed using a flat sample having the same composition as the glazing article for which compliance is to be demonstrated. The glazing manufacturer shall provide documentation containing its technical justification that testing a flat sample is sufficient to verify compliance of the glazing article with the requirements of this paragraph.

(ii) Flat sample testing is permitted only if no surface of the full-size glazing article contains curvature whose radius is less than 2,500 mm (98 inches); and when a complete, finished, glazing article is laid (convex side uppermost) on a flat horizontal surface, the distance, (measured perpendicularly to the flat surface) between the flat surface and the inside face of the glazing article is not greater than 200 mm (8 inches).

(4) End-facing glazing shall demonstrate sufficient resistance to spalling, as verified by the large impact

projectile test under the following conditions:

(i) An annealed aluminum witness plate of maximum thickness 0.15 mm (0.006 inches) and of dimension 500 mm by 500 mm (19.7 by 19.7 inches) is placed vertically behind the sample under test, at a horizontal distance of 500 mm (19.7 inches) from the point of impact in the direction of travel of the projectile or the distance between the point of impact of the projectile and the location of the driver's eyes in the driver's normal operating position, whichever is less. The center of the witness plate is aligned with the point of impact.

(ii) Spalling performance shall be deemed satisfactory if the aluminum witness plate is not marked.

(iii) For the purposes of this part, materials used specifically to protect the cab occupants from spall (*i.e.,* spall shields) shall not be required to meet the flammability and smoke emission performance requirements of § 299.413.

(5) Each end-facing exterior window in a cab shall, at a minimum, provide ballistic penetration resistance that meets the requirements of appendix A to part 223 of this chapter.

(c) *Trainset glazing; side-facing.* Except as provided in paragraph (d) of this section, each side-facing exterior window in a trainset shall comply with the requirements for Type II glazing as defined in part 223 of this chapter or other alternative standard approved by FRA.

(d) *Side-facing breakable glazing.* A side-facing exterior window intended to be breakable and serve as an emergency egress window may comply with an alternative standard approved for use by FRA under § 299.15.

(e) *Certification of Glazing Materials.* Glazing materials shall be certified in accordance with the following procedures:

(1) Each manufacturer that provides glazing materials, intended by the manufacturer for use in achieving compliance with the requirements of this subpart, shall certify that each type of glazing material being supplied for this purpose has been successfully tested in accordance with this section and that test verification data are available to the railroad or to FRA upon request.

(2) Tests performed on glazing materials for compliance with this part shall be conducted by either—

(i) An independent third party (lab, facility, underwriter); or

(ii) The glazing manufacturer, providing FRA with the opportunity to witness all tests by written notice, a minimum of 30 days prior to testing.

(3) Any glazing material certified to meet the requirements of this part shall be re-certified if any change is made to the glazing that may affect its mechanical properties or its mounting arrangement on the vehicle.

(4) All certification/re-certification documentation shall be made available to FRA upon request. The test verification data shall contain all pertinent original data logs and documentation that the selection of material samples, test set-ups, test measuring devices, and test procedures were performed by qualified individuals using recognized and acceptable practices and in accordance with this section.

(5) Glazing shall be marked in the following manner:

(i) Each end-facing exterior window in a cab shall be permanently marked, prior to installation, in such a manner that the marking is clearly visible after the material has been installed. The marking shall include:

(A) The words ''FRA TYPE IHS'' to indicate that the material meets the requirements specified in paragraph (b) of this section;

(B) The manufacturer of the material; and

(C) The type or brand identification of the material.

(ii) Each side-facing exterior window in a trainset shall be permanently marked, prior to installation, in such a manner that the marking is clearly visible after the material has been installed. The marking shall include:

(A) The words ''FRA TYPE II'' to indicate that the material meets the requirements specified in paragraph (c) of this section;

(B) The manufacturer of the material; and

(C) The type or brand identification of the material.

(f) *Glazing securement.* Each exterior window shall remain in place when subjected to—

(1) The forces due to air pressure differences caused when two trainsets pass at the minimum separation for two adjacent tracks, while traveling in opposite directions, each trainset traveling at the maximum approved trainset speed in accordance with § 299.609(g); and

(2) The impact forces that the exterior window is required to resist as specified in this section.

§ 299.409 Brake system.

(a) *General.* The railroad shall demonstrate through analysis and testing the maximum safe operating speed for its trainsets that results in no thermal damage to equipment or infrastructure during normal operation of the brake system.

(b) *Minimum performance requirement for brake system.* Each trainset's brake system, under the worst-case adhesion conditions as defined by the railroad, shall be capable of stopping the trainset from its maximum operating speed within the signal spacing existing on the track over which the trainset is operating.

(c) *Urgent brake system.* A trainset shall be provided with an urgent brake application feature that produces an irretrievable stop. An urgent brake application shall be available at any time, and shall be initiated by an unintentional parting of the trainset or by the trainset crew from the conductor rooms.

(d) *Application/release indication.* The brake system shall be designed so that an inspector may determine whether the brake system is functioning properly without being placed in a dangerous position on, under or between the equipment. This determination may be made through automated monitoring system that utilizes sensors to verify that the brakes have been applied and released.

(e) *Passenger brake alarm.* (1) A means to initiate a passenger brake alarm shall be provided at two locations in each unit of a trainset. The words ''Passenger Brake Alarm'' shall be legibly stenciled or marked on each device or on an adjacent badge plate.

(2) All passenger brake alarms shall be installed so as to prevent accidental activation.

(3) When a passenger brake alarm is activated, it shall initiate an emergency brake application. The emergency brake application can be overridden by the driver so that the trainset can be stopped at a safe location.

(4) To retrieve the emergency brake application described in paragraph (e)(3) of this section, the driver must activate appropriate controls to issue a command for brake application as specified in the railroad's operating rules.

(f) *Degraded brake system performance.* The following requirements address degraded brake system performance on the railroad's high-speed trainsets—

(1) Loss of power or failure of regenerative brake shall not result in exceeding the allowable stopping distance as defined by the railroad;

(2) The available friction braking shall be adequate to stop the trainset safely under the operating conditions defined by the railroad;

(3) The operational status of the trainset brake system shall be displayed for the driver in the operating cab; and

(4) Under § 299.607(b)(5), the railroad shall demonstrate through analysis and testing the maximum speed for safely operating its trainsets using only the friction brake system with no thermal damage to equipment or infrastructure. The analysis and testing shall also determine the maximum safe operating speed for various percentages of operative friction brakes.

(g) *Main reservoir system.* The main reservoirs in a trainset shall be designed and tested to meet the requirements set forth in JIS B 8265:2010(E) (incorporated by reference, *see* § 299.17). Reservoirs shall be certified based on their size and volume requirements.

(h) *Main reservoir tests.* Prior to initial installation, each main reservoir shall be subjected to a pneumatic or hydrostatic pressure test based on the maximum working pressure defined in paragraph (g) of this section unless otherwise established by the railroad's mechanical officer. Records of the test date, location, and pressure shall be maintained by the railroad for the life of the equipment. Periodic inspection requirements for main reservoirs shall be defined in the railroad's inspection, testing, and maintenance program required under § 299.445.

(i) *Brake gauges.* All mechanical gauges and all devices providing electronic indication of air pressure that are used by the driver to aid in the control or braking of a trainset shall be located so that they can be conveniently read from the driver's normal position during operation of the trainset.

(j) *Brake application/release.* (1) Brake actuators shall be designed to provide brake pad clearance when the brakes are released.

(2) The minimum brake cylinder pressure shall be established to provide adequate adjustment from minimum service to emergency for proper trainset operation.

(k) *Leakage.* The method of inspection for main reservoir pipe and brake cylinder pipe leakage shall be prescribed in the railroad's inspection, testing, and maintenance program required by § 299.445.

(l) *Slide alarm.* (1) A trainset shall be equipped with an adhesion control system designed to automatically adjust the braking force on each wheel to prevent sliding during braking.

(2) A wheel slide alarm that is visual or audible, or both, shall alert the driver in the operating cab to wheel-slide conditions on any axle of the trainset.

(3) Operating restrictions for a trainset with wheel slide protection devices that are not functioning as intended shall be defined by the railroad under its requirements for movement of defective equipment required by § 299.447, and within the railroad's operating rules, as appropriate.

(m) *Monitoring and diagnostic system.* Each trainset shall be equipped with a monitoring and diagnostic system that is designed to assess the functionality of the brake system for the entire trainset automatically. Details of the system operation and the method of communication of brake system functionality prior to the dispatch of the trainset shall be described in detail in the railroad's Operating Rules and inspection, testing, and maintenance program required by § 299.445.

(n) *Trainset securement.* Each trainset shall be equipped with a means of securing the equipment, independent of the friction brake, on the grade condition defined by the railroad. The railroad's operating rules shall define procedures for trainset securement and the railroad shall demonstrate that these procedures effectively secure the equipment in accordance with § 299.607(b)(5).

(o) *Rescue operation; brake system.* A trainset's brake system shall be designed so as to allow a rescue vehicle or trainset to control its brakes when the trainset is disabled.

§ 299.411 Bogies and suspension system.

(a) *Wheel climb.* (1) Suspension systems shall be designed to reasonably prevent wheel climb, wheel unloading, rail rollover, rail shift, and a vehicle from overturning to ensure safe, stable performance and ride quality. These requirements shall be met—

(i) In all operating environments, and under all track conditions and loading conditions as determined by the railroad; and

(ii) At all track speeds and over all track qualities consistent with the requirements in subpart C of this part, up to the maximum trainset speed and maximum cant deficiency of the equipment in accordance with § 299.609(g).

(2) All passenger equipment shall meet the safety performance standards for suspension systems contained in § 299.609(h). In particular—

(i) *Vehicle/track system qualification.* All trainsets shall demonstrate safe operation during vehicle/track system qualification in accordance with § 299.609 and is subject to the requirements of § 299.315.

(ii) *Revenue service operation.* All passenger equipment in service is subject to the requirements of § 299.315.

(b) *Lateral accelerations.* The trainsets shall not operate under conditions that result in a steady-state lateral acceleration greater than 0.15g, as measured parallel to the car floor inside the passenger compartment.

(c) *Journal bearing overheat sensors.* Bearing overheat sensors shall be provided on all journal bearings on each trainset.

§ 299.413 Fire safety.

(a) *General.* All materials used in constructing the interior of the trainset shall meet the flammability and smoke emission characteristics and testing standards contained in appendix B to part 238 of this chapter. For purposes of this section, the interior of the trainset includes walls, floors, ceilings, seats, doors, windows, electrical conduits, air ducts, and any other internal equipment.

(b) *Certification.* The railroad shall require certification that a representative sample of combustible materials to be—

(1) Used in constructing a passenger car or a cab, or

(2) Introduced in a passenger car or a cab, as part of any kind of rebuild, refurbishment, or overhaul of the car or cab, has been tested by a recognized independent testing laboratory and that the results show the representative sample complies with the requirements of paragraph (a) of this section at the time it was tested.

(c) *Fire safety analysis.* The railroad shall ensure that fire safety considerations and features in the design of the trainsets reduce the risk of personal injury caused by fire to an acceptable level in its operating environment using a formal safety methodology. To this end, the railroad shall complete a written fire safety analysis for the passenger equipment being procured. In conducting the analysis, the railroad shall—

(1) Identify, analyze, and prioritize the fire hazards inherent in the design of the equipment.

(2) Take effective steps to design the equipment and select materials which help provide sufficient fire resistance to reasonably ensure adequate time to detect a fire and safely evacuate the passengers and crewmembers, if a fire cannot be prevented. Factors to consider include potential ignition sources; the type, quantity, and location of the materials; and availability of rapid and safe egress to the exterior of the equipment under conditions secure from fire, smoke, and other hazards.

(3) Reasonably ensure that a ventilation system in the equipment does not contribute to the lethality of a fire.

(4) Identify in writing any trainset component that is a risk of initiating fire and which requires overheat protection. An overheat detector shall be installed in any component when the analysis determines that an overheat detector is necessary.

(5) Identify in writing any unoccupied trainset compartment that contains equipment or material that poses a fire hazard, and analyze the benefit provided by including a fire or smoke detection system in each compartment so identified. A fire or smoke detector shall be installed in any unoccupied compartment when the analysis determines that such equipment is necessary to ensure sufficient time for the safe evacuation of passengers and crewmembers from the trainset. For purposes of this section, an unoccupied trainset compartment means any part of the equipment structure that is not normally occupied during operation of the trainset, including a closet, baggage compartment, food pantry, etc.

(6) Determine whether any occupied or unoccupied space requires a portable fire extinguisher and, if so, the proper type and size of the fire extinguisher for each location. As required by § 239.101 of this chapter, each passenger car is required to have a minimum of one portable fire extinguisher. If the analysis performed indicates that one or more additional portable fire extinguishers are needed, such shall be installed.

(7) Analyze the benefit provided by including a fixed, automatic fire-suppression system in any unoccupied trainset compartment that contains equipment or material that poses a fire hazard, and determine the proper type and size of the automatic fire-suppression system for each such location. A fixed, automatic fire-suppression system shall be installed in any unoccupied compartment when the analysis determines that such equipment is practical and necessary to ensure sufficient time for the safe evacuation of passengers and crewmembers from the trainset.

(8) Explain how safety issues are resolved in the design of the equipment and selection of materials to reduce the risk of each fire hazard.

(9) Describe the analysis and testing necessary to demonstrate that the fire protection approach taken in the design of the equipment and selection of materials meets the fire protection requirements of this part.

(d) *Inspection, testing, and maintenance.* The railroad shall develop and adopt written procedures for the inspection, testing, and maintenance of all fire safety systems and fire safety equipment on the passenger equipment it operates under § 299.445(b), and subpart G of this part. The railroad shall comply with those procedures that it designates as mandatory for the safety of the equipment and its occupants.

§ 299.415 Doors.

(a) Each powered, exterior side door in a vestibule that is partitioned from the passenger compartment of a trainset shall have a manual override device that is—

(1) Capable of releasing the door to permit it to be opened without power.

(2) Located such that—

(i) Interior access is provided adjacent to each manual door release mechanism; and,

(ii) Exterior access is provided on each side of each car.

(3) Designed and maintained so that a person may access and operate the override device readily without requiring the use of a tool or other implement.

(4) The railroad may protect a manual override device used to open a powered, exterior door with a cover or a screen.

(5) When a manual override device is activated, door panel friction, including seals and hangers, shall allow the doors to be opened or closed manually with as low a force as practicable.

(6) The emergency release mechanism shall require manual reset.

(b) Each passenger car shall have a minimum of one exterior side door per side. Each such door shall provide a minimum clear opening with dimensions of 813 mm (32 inches) horizontally by 1,850 mm (72.8 inches) vertically.

(c) Door exits shall be marked, and instructions provided for their use, as specified in § 299.423.

(d) All doors intended for access by emergency responders shall be marked, and instructions provided for their use, as specified in § 299.423.

(e) Vestibule doors and other interior doors intended for passage through a passenger car.

(1) *General.* Except for a door providing access to a control compartment each powered vestibule door and any other powered interior door intended for passage through a passenger car shall have a manual override device that conforms with the requirements of paragraphs (e)(2) and (3) of this section.

(2) *Manual override devices.* Each manual override device shall be:

(i) Capable of releasing the door to permit it to be opened without power;

(ii) Located adjacent to the door it controls; and

(iii) Designed and maintained so that a person may readily access and operate the override device from each side of the door without the use of a tool or other implement.

(3) *Marking and instructions.* Each manual override device and each retention mechanism shall be marked, and instructions provided for their use, as specified in § 299.423.

(f) The status of each powered, exterior side door in a passenger car shall be displayed to the driver in the operating cab. Door interlock sensors shall be provided to detect trainset motion and shall be nominally set to operate at 5 km/h.

(g) All powered exterior side passenger doors shall—

(1) Be equipped with the service-proven door safety system utilized by the N700 or an alternate door safety system designed subject to a Failure Modes, Effects, Criticality Analysis (FMECA);

(2) Be designed with an obstruction detection system capable of detecting a rigid flat bar, 6.4 mm (¼ inches) wide and 76 mm (3 inches) high and a rigid rod, 9.5 mm (⅜ inches) in diameter;

(3) Incorporate an obstruction detection system sufficient to detect large obstructions;

(4) Be designed so that activation of a door by-pass feature does not affect the operation of the obstruction detection system on all the other doors on the trainset;

(5) Have the door control station located in a secured area that is only accessible to crewmembers or maintenance personnel;

(6) Be designed such that the door open or closed circuit is not affected by the throttle position; and

(7) Use discrete, dedicated trainlines for door-open and door-close commands, door-closed summary circuit, and no motion, if trainlined.

(h) All powered exterior side door systems in a trainset shall—

(1) Be designed with a door summary circuit. The door summary circuit shall be connected or interlocked to prohibit the trainset from developing tractive power if an exterior side door in a passenger car, other than a door under the direct physical control of a crewmember for his or her exclusive use, is not closed;

(2) Be connected to side door status indicators located on the exterior of each unit of the trainset;

(3) Be connected to a door summary status indicator that is readily viewable to the driver from his or her normal position in the operating cab;

(4) If equipped with a trainset-wide door by-pass device, be designed so that the trainset-wide door by-pass functions only when activated from the operating cab of the trainset;

(5) Be equipped with a lock (cut-out/lock-out) mechanism installed at each door panel to secure a door in the closed and locked position. When the lock mechanism is utilized to secure the door in the closed position, a door-closed indication shall be provided to the door summary circuit; and

(6) Be designed such that a crew key or other secure device be required to lock-out an exterior side door to prevent unauthorized use.

(i)(1) *Visual inspections and functional tests.* The inspection and functional tests required for the door safety system, including the trainset-wide door by-pass verification, shall be conducted in accordance with the railroad's trainset inspection, testing, and maintenance program in accordance with § 299.445, and operating rules under subpart E.

(2) *Face-to-face relief.* Crewmembers taking control of a trainset do not need to perform a visual inspection or a functional test of the door by-pass devices in cases of face-to-face relief of another trainset crew and notification by that crew as to the functioning of the door by-pass devices.

(j) The railroad shall maintain a record of each door by-pass activation and each unintended opening of a powered exterior side door, including any repair(s) made, in the defect tracking system as required by § 299.445(h).

§ 299.417 Emergency lighting.

(a) *General.* Emergency lighting shall be provided in each unit of a trainset. The emergency lighting system shall be designed to facilitate the ability of passengers and trainset crew members, and/or emergency responders to see and orient themselves, to identify obstacles, in order to assist them to safely move through and out of a passenger rail car.

(1) Emergency lighting shall illuminate the following areas:

(i) Passenger car aisles, passageways, and toilets;

(ii) Door emergency exit controls/manual releases;

(iii) Vestibule floor near the door emergency exits (to facilitate safe entrance/exit from the door);

(iv) Within the car diaphragm and adjacent area; and

(v) Specialty car locations such as crew offices.

(b) *Minimum illumination levels.* (1) A minimum, average illumination level of 10.7 lux (1 foot-candle) measured at floor level adjacent to each exterior door and each interior door providing access to an exterior door (such as a door opening into a vestibule);

(2) A minimum, average illumination level of 10.7 lux (1 foot-candle) measured 635 mm (25 inches) above floor level along the center of each aisle and passageway;

(3) A minimum illumination level of 1.1 lux (0.1 foot-candle) measured 635 mm (25 inches) above floor level at any point along the center of each aisle and passageway;

(c) *Lighting activation.* Each emergency lighting fixture shall activate automatically or be energized continuously whenever the car is in revenue service and normal lighting is not available.

(d) *Independent power source.* Emergency lighting system shall have an independent power source(s) that is located in or within one half a car length of each light fixture it powers.

(e) *Functional requirements.* Emergency lighting system components shall be designed to operate without failure and capable of remaining attached under the conditions typically found in passenger rail equipment including expected mechanical vibrations, and shock in accordance with § 299.405(a)(1), as well as comply with electromagnetic interference criteria in § 299.435(e).

(1) All emergency lighting system components shall be capable to operate in all railcar orientations.

(2) All emergency lighting system components shall be capable to operate when normal power is unavailable for 90 minutes without a loss of more than 40% of the minimum illumination levels specified in paragraph (b) of this section.

(f) *Inspection.* (1) The railroad shall inspect the emergency lighting system as required by its inspection, testing, and maintenance program in accordance with § 299.445.

(2) If batteries are used as independent power sources, they shall have automatic self-diagnostic modules designed to perform discharge tests.

§ 299.419 Emergency communication.

(a) *PA (public address) system.* Each passenger car shall be equipped with a PA system that provides a means for a trainset crewmember to communicate by voice to passengers of his or her trainset in an emergency situation. The PA system shall also provide a means for a trainset crewmember to communicate by voice in an emergency situation to persons in the immediate vicinity of his or her trainset (*e.g.,* persons on the station platform). The PA system may be part of the same system as the intercom system.

(b) *Intercom system.* Each passenger car shall be equipped with an intercom system that provides a means for passengers and crewmembers to communicate by voice with each other in an emergency situation. Except as further specified, at least one intercom that is accessible to passengers without using a tool or other implement shall be located in each end (half) of each car.

(c) *Marking and instructions.* The following requirements apply to all units of a trainset:

(1) The location of each intercom intended for passenger use shall be conspicuously marked with HPPL material in accordance with § 299.423; and

(2) Legible and understandable operating instructions shall be made of HPPL material in accordance with § 299.423 and posted at or near each such intercom.

(d) *Back-up power.* PA and intercom systems shall have a back-up power system capable of—

(1) Powering each system to allow intermittent emergency communication for a minimum period of 90 minutes. Intermittent communication shall be considered equivalent to continuous communication during the last 15 minutes of the 90-minute minimum period; and

(2) Operating in all equipment orientations within 90 degrees of vertical.

(e) *Additional requirements.* The PA and intercom systems shall be designed to operate without failure and remain attached under the conditions typically found in passenger rail equipment including expected mechanical vibrations, and shock in accordance with § 299.405(a)(1), as well as comply with electromagnetic interference criteria in § 299.435(e).

§ 299.421 Emergency roof access.

(a) *Number and dimensions.* Each passenger car shall have a minimum of two emergency roof access locations, each providing a minimum opening of 660 mm (26 inches) longitudinally (*i.e.,* parallel to the longitudinal axis of the car) by 610 mm (24 inches) laterally.

(b) *Means of access.* Emergency roof access shall be provided by means of a conspicuously marked structural weak point in the roof for access by properly equipped emergency response personnel.

(c) *Location.* Emergency roof access locations shall be situated so that when a car is on its side—

(1) One emergency access location is situated as close as practicable within

each half of the roof as divided top from bottom; and

(2) One emergency access location is situated as close as practicable within each half of the roof as divided left from right. (*See* Figure 1 to this paragraph.)

Figure 1 to paragraph (c)(2) - Example of Location of Emergency Roof Access

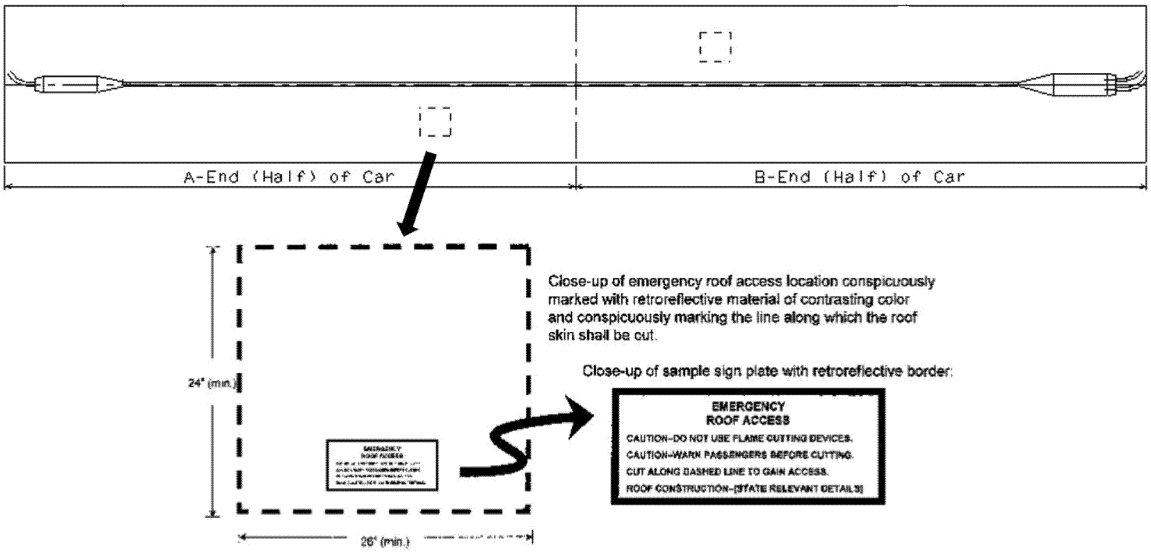

(d) *Obstructions.* The ceiling space below each emergency roof access location shall be free from wire, cabling, conduit, and piping. This space shall also be free of any rigid secondary structure (*e.g.,* a diffuser or diffuser support, lighting back fixture, mounted PA equipment, or luggage rack) where practicable. It shall be permissible to cut through interior panels, liners, or other non-rigid secondary structures after making the cutout hole in the roof, provided any such additional cutting necessary to access the interior of the vehicle permits a minimum opening of the dimensions specified in paragraph (a) of this section to be maintained.

(e) *Marking instructions.* Each emergency roof access location shall be conspicuously marked with retroreflective material of contrasting color meeting the minimum requirements specified in § 299.423. Legible and understandable instructions shall be posted at or near each such location.

§ 299.423 Markings and instructions for emergency egress and rescue access.

(a) *General.* Instructions and markings shall be provided in each unit of a trainset in accordance with the minimum requirements of this section to provide instructions for passengers and trainset crewmembers regarding emergency egress, and rescue access instructions for emergency responders.

(b) *Visual identity and recognition.* Emergency exit signage/marking systems shall enable passengers and trainset crewmembers to make positive identification of emergency exits.

(1) Each interior emergency exit sign and emergency exit locator sign shall be conspicuous (*i.e.,* clearly recognizable/distinguishable) or become conspicuous to passengers and trainset crewmembers immediately and automatically upon the loss of power for normal lighting, from a minimum distance of 1.52 m (5 feet).

(2) The signs and markings shall operate independently of the car's normal and emergency lighting systems, for a minimum of 90 minutes after loss of all power for normal lighting.

(3) An emergency exit locator sign shall be located in close proximity of each emergency exit and shall work in conjunction with the emergency exit sign. The location of the sign, directional arrow(s), or wording shall guide passengers and trainset crewmembers to the emergency exit route.

(c) *Rescue access signage/marking systems.* (1) Rescue access signage and marking systems shall enable emergency responders to make positive identification of rescue access points.

(2) Rescue access information for emergency responders placed on the exterior of the carbody shall, at a minimum, consist of the following:

(i) Each door intended for use by emergency responders for rescue access shall be identified with emergency access signs, symbols, or other conspicuous marking consisting of retroreflective material that complies with paragraphs (d) and (e) of this section.

(ii) Rescue access door control locator signs/markings and instructions;

(A) Each door intended for use by emergency responders for rescue access shall have operating instructions for opening the door from outside the car placed on or immediately adjacent to the door on the carbody. If a power door does not function with an integral release mechanism, the instructions shall indicate the location of the exterior manual door control.

(B) Each power door intended for use by emergency responders for rescue access which has a non-integral release mechanism located away from the door, shall have a door control sign/marking placed at the location of this control that provides instructions for emergency operation, either as part of the access sign/marking or as another sign/marking.

(C) Each car equipped with manual doors shall have operating instructions for opening the door from the exterior, either as part of the access sign/marking or as another sign/marking.

(iii) Rescue access window locator signs/markings and instructions; and

(A) Each rescue access window shall be identified with a unique retroreflective and easily recognizable sign, symbol, or other conspicuous marking that complies with paragraphs (d) and (e) of this section.

(B) Signs, symbols, or marking shall be placed at the bottom of each such window, on each window, or adjacent

to each window, utilizing arrows, where necessary, to clearly designate rescue assess window location. Legible and understandable window-access instructions, including any pictogram/instructions for removing the window, shall be posted at or near each rescue access window.

(iv) Roof access locator signs/markings and instructions.

(A) The location of each emergency access point provided on the roof of a passenger car shall be clearly marked with retroreflective material of contrasting color that complies with paragraphs (d) and (e) of this section.

(B) Legible and understandable instructions shall be posted at or near each such location.

(C) If emergency roof access is provided by means of a structural weak point:

(*1*) The retroreflective material shall clearly mark the line along which the roof skin shall be cut; and

(*2*) A sign plate with a retroreflective border shall also state:

CAUTION—DO NOT USE FLAME CUTTING DEVICES.

CAUTION—WARN PASSENGERS BEFORE CUTTING.

CUT ALONG DASHED LINE TO GAIN ACCESS.

ROOF CONSTRUCTION—[STATE RELEVANT DETAILS].

(d) *Color contrast.* Exterior signs/markings shall provide luminance contrast ratio of not less than 0.5, as measured by a color-corrected photometer.

(e) *Materials*—(1) *Retroreflective material.* Exterior emergency rescue access locator signs/markings shall be constructed of retroreflective material that conforms to the specifications for Type I material sheeting, as specified in ASTM D 4956–07 $^{\varepsilon 1}$ (incorporated by reference, *see* § 299.17), as tested in accordance with ASTM E 810–03 (incorporated by reference, *see* § 299.17).

(2) *HPPL materials.* All HPPL materials used in finished component configurations shall comply with the minimum luminance criterion of 7.5 mcd/m^2 after 90 minutes when tested according to the provisions of ASTM E 2073–07 (incorporated by reference, *see* § 299.17), with the following three modifications:

(i) *Activation.* The HPPL material shall be activated with a fluorescent lamp of 40W or less and a color temperature of 4000–4500K that provides no more than 10.7 lux (1 fc) of illumination as measured on the material surface. The activation period shall be for no more than 60 minutes.

(ii) *Luminance.* The photopic luminance of all specimens of the HPPL material shall be measured with a luminance meter as defined in section 5.2 of ASTM E 2073–07, a minimum of 90 minutes after activation has ceased.

(iii) *Luminance in mcd/m*^{2}. The test report shall include a luminance measurement 90 minutes after activation has ceased.

(f) *Recordkeeping.* (1) The railroad shall retain a copy of the car manufacturer/supplier provided independent laboratory certified test report results showing that the illuminance or luminance measurements, as appropriate, on the active area of the signage/marking component. Such records shall be kept until all cars with those components are retired, transferred, leased, or conveyed to another railroad for use in revenue service. A copy of such records shall be transferred to the accepting railroad along with any such cars.

(2) The railroad shall retain a copy of the railroad-approved illuminance test plan(s) and test results until the next periodic test, or other test specified in accordance with the railroad's inspection, testing, and maintenance program is conducted on a representative car/area, or until all cars of that type are retired, or are transferred, leased, or conveyed to another railroad. A copy of such records shall be transferred to the accepting railroad along with such car(s).

(3) The railroad shall retain a copy of the certified independent laboratory test report results that certify that the retroreflective material complies with Type I materials per ASTM D–4956–07 $^{\varepsilon 1}$ until all cars containing the retroreflective material are retired, or are transferred, leased, or conveyed to another railroad. A copy of such records shall be provided to the accepting railroad along with any car(s) that are transferred, leased, or conveyed.

§ 299.425 Low-location emergency exit path marking.

(a) *General.* Low-location emergency exit path marking (LLEEPM) shall be provided in each unit of a trainset. The LLEEPM system shall be designed to identify the location of primary door exits and the exit path to be used to reach such doors by passengers and trainset crewmembers under conditions of darkness when normal and emergency sources of illumination are obscured by smoke or are inoperative.

(b) *Visual identity and recognition.* The LLEEPM system shall be conspicuous (*i.e.,* clearly recognizable/distinguishable), or become conspicuous immediately and automatically from a low-location upon loss of power for normal lighting, and under the minimum general emergency light illumination levels as specified in § 299.423.

(c) *Signage and markings.* At a minimum, the LLEEPM system shall have the following three components:

(1) *Primary door exit signs.* (i) Each primary door exit shall be clearly marked with an exit sign;

(ii) The exit sign shall be visible from a low-location from the exit along the exit path; and

(iii) Each exit sign shall be located on or immediately adjacent to each door and placed between 152.4 and 457.2 mm (6 and 18 inches) above the floor.

(2) *Primary door exit marking/delineators.* (i) The location of the exit path shall be marked using electrically powered (active) marking/delineators or light fixtures, HPPL (passive) marking/delineators or a combination of these two systems.

(ii) The requirements in this section apply for both electrical and HPPL components, whether installed on the walls, floors, or seat assemblies.

(iii) Each primary door shall be marked on or around the door's operating handle.

(3) *Exit path marking/delineators.* (i) The marking/delineator components shall be positioned so as to identify an exit path to all primary exits that is clearly visible and easily recognizable from any seat or compartment in the trainset, when normal lighting and emergency lighting are unavailable in conditions of darkness and/or smoke.

(ii) Markings/delineators shall be located on the floor or no higher than 457.2 mm (18 inches) on the seat assembly, or walls/partitions of aisles, and/or passageways.

(iii) Changes in the direction of the exit path shall be indicated by the LLEEPM and be placed within 102 mm (4 inches) of the corner of the exit path.

(d) *Material*—(1) *HPPL passive systems.* HPPL strip marking/delineator material used for LLEEPM components shall be capable of providing a minimum luminance level of 7.5 mcd/m^2, measured 90 minutes after normal power has ceased.

(2) *Electroluminescent marking/delineator strips.* The luminance value of the electroluminescent (EL) marking/delineator strip shall be at least 1,000 mcd/m^2, as measured on the strip surface.

(e) *Conspicuity of markings.* LLEEPM signs shall comply with the text, color and respective illuminance or luminance requirements specified in § 299.423 and in this section.

(f) *Emergency performance duration.* The LLEEPM system shall operate independently of the car's normal and emergency lighting systems for 90 minutes after loss of all power for normal lighting.

(g) *Recordkeeping.* (1) The railroad shall retain a copy of the car manufacturer/supplier provided certified independent laboratory test report results showing that the illuminance or luminance measurements, as appropriate, on the active area of the signage/marking/delineator component comply with the criteria specified in § 299.423 and in this section.

(2) The railroad shall retain a copy of the railroad-approved illuminance test plan(s) and test results until the next periodic test, or other test specified in accordance with the railroad's inspection, testing, and maintenance program and ensure that tests are conducted on a representative car, or until all cars of that type are retired, transferred, leased, or conveyed to another railroad. A copy of such records shall be provided to the accepting railroads along with any car(s) that are transferred, leased, or conveyed.

(3) Illegible, broken, damaged, missing, or non-functioning components of the LLEEPM system, including the normal and emergency power systems, shall be reported and repaired in accordance with the railroad's inspection, testing, and maintenance program as specified in § 299.445.

§ 299.427 Emergency egress windows.

(a) *Number and location.* Each unit in a trainset shall have a minimum of four emergency egress windows. At least one emergency egress window shall be located in each side of each end (half) of the car, in a staggered configuration where practicable. (See Figure 1 to this paragraph.)

Figure 1 to paragraph (a) - Example of Location and Staggering of Emergency Egress and Rescue Access Windows—Top and Side View Depictions

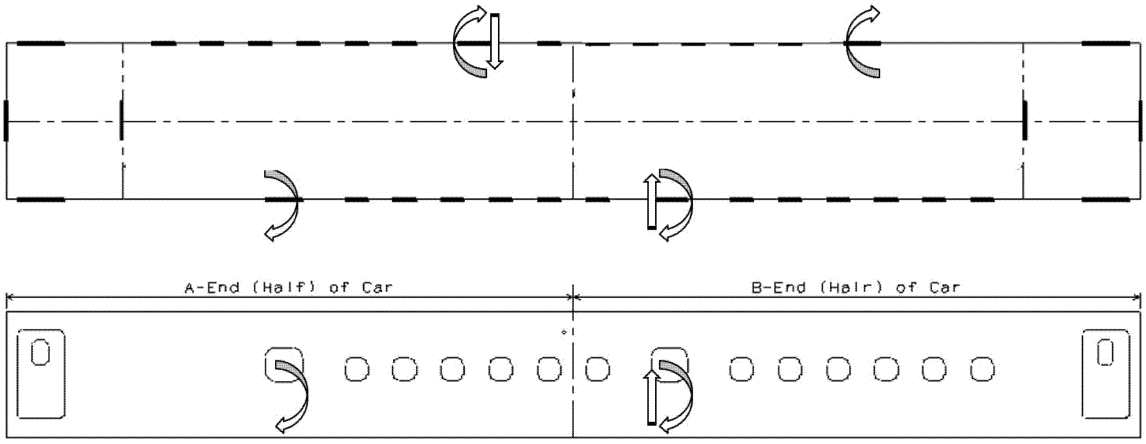

(b) *Ease of operability.* Each emergency egress window shall be designed to permit rapid and easy removal from the inside of the car during an emergency situation using a hammer designed to break the glazing that shall be located adjacent to each emergency egress window. The railroad shall inspect for the presence of the emergency hammers each day prior to the trainset being placed into service in accordance with § 299.711(b).

(c) *Dimensions.* Except as provided in paragraph (f) of this section, each emergency egress window in a passenger car shall have an unobstructed opening with minimum dimensions of 660 mm (26 inches) horizontally by 610 mm (24 inches) vertically. A seatback is not an obstruction if it can be moved away from the window opening without using a tool or other implement.

(d) *Marking and instructions.* (1) Each emergency egress window shall be conspicuously and legibly marked with luminescent material on the inside of each car to facilitate passenger egress as specified in § 299.423.

(2) Legible and understandable operating instructions, including instructions for removing the emergency egress window shall be made of luminescent material, shall be posted at or near each such emergency egress window as specified in § 299.423.

(e) *Obstructions.* If emergency egress window removal may be hindered by the presence of a seatback, headrest, luggage rack, or other fixture, the instructions shall state the method for allowing rapid and easy removal of the emergency egress window, taking into account the fixture(s), and this portion of the instructions may be in written or pictorial format.

(f) *Additional emergency egress windows.* Any emergency egress window in addition to the minimum number required by paragraph (a) of this section that has been designated for use by the railroad need not comply with the minimum dimension requirements in paragraph (c) of this section, but must otherwise comply with all requirements in this subpart applicable to emergency egress windows.

§ 299.429 Rescue access windows.

(a) *General.* Each emergency egress window required by § 299.427 shall also serve as a means of rescue access.

(b) *Ease of operability.* Each rescue access window must be capable of being removed without unreasonable delay by an emergency responder using tools or implements that are commonly available to the responder in a passenger trainset emergency.

(c) *Marking and instructions.* (1) Each rescue access window shall be marked with retroreflective material on the exterior of each car as specified in § 299.423. A unique and easily recognizable symbol, sign, or other conspicuous marking shall also be used to identify each such window.

(2) Legible and understandable window-access instructions, including

instructions for removing the window, shall be posted at or near each rescue access window as specified in § 299.423.

§ 299.431 Driver's controls and cab layout.

(a) *Driver controls and cab layout.* Driver controls and cab layout shall replicate that used in the N700, unless otherwise approved by FRA.

(b) *Cab seating.* Each seat provided for an employee regularly assigned to occupy a cab and any floor-mounted seat in the cab shall be securely attached in accordance with § 299.405.

(c) *Cab interior surface.* Sharp edges and corners shall be eliminated from the interior of the cab, and interior surfaces of the cab likely to be impacted by an employee during a collision or derailment shall be padded with shock-absorbent material.

(d) *Cab securement.* Trainset interior cab doors shall be equipped with the following:

(1) A secure and operable device to lock the door from the outside that does not impede egress from the cab; and

(2) A securement device on each cab door that is capable of securing the door from inside of the cab.

(e) *Cab glazing serviceability.* End-facing cab windows of the lead trainset cab shall be free of cracks, breaks, or other conditions that obscure the view of the right-of-way for the crew from their normal position in the cab.

(f) *Floors of cabs, passageways, and compartments.* Floors of cabs, passageways, and compartments shall be kept free from oil, water, waste or any obstruction that creates a slipping, tripping or fire hazard. Floors shall be properly treated to provide secure footing.

(g) *Cab environmental control.* Each lead cab in a trainset shall be heated and air conditioned. The HVAC system shall be inspected and maintained to ensure that it operates properly and meets the railroad's performance standard which shall be defined in the inspection, testing, and maintenance program.

(h) *Trainset cab noise.* Performance standards for the railroad's trainsets—

(1) The average noise levels in the trainset cab shall be less than or equal to 85 dB(A) when the trainset is operating at maximum approved trainset speed as approved under § 299.609(g). Compliance with this paragraph (h)(1) shall be demonstrated during the pre-revenue service system integration testing as required by § 299.607.

(2) The railroad shall not make any alterations during maintenance or modifications to the cab, that cause the average sound level to exceed the requirements in paragraph (h)(1) of this section.

(3) The railroad or manufacturer shall follow the test protocols set forth in appendix B to this part to determine compliance with paragraph (h)(1) of this section, and, to the extent reasonably necessary to evaluate the effect of alterations during maintenance, to determine compliance with paragraph (h)(2) of this section.

(i) *Maintenance of trainset cabs.* (1) If the railroad receives an excessive noise report, and if the condition giving rise to the noise is not required to be immediately corrected under this part, the railroad shall maintain a record of the report, and repair or replace the item identified as substantially contributing to the noise:

(i) On or before the next periodic inspection required by the railroad's inspection, testing, and maintenance program under subpart G; or

(ii) If the railroad determines that the repair or replacement of the item requires significant shop or material resources that are not readily available, at the time of the next major equipment repair commonly used for the particular type of maintenance needed.

(2) The railroad has an obligation to respond to an excessive noise report that a trainset-cab-occupant files. The railroad meets its obligation to respond to an excessive noise report, as set forth in paragraph (i)(1) of this section, if the railroad makes a good faith effort to identify the cause of the reported noise, and where the railroad is successful in determining the cause, if the railroad repairs or replaces the items that cause the noise.

(3)(i) The railroad shall maintain a written or electronic record of any excessive noise report, inspection, test, maintenance, replacement, or repair completed pursuant to paragraph (i) of this section, and the date on which that inspection, test, maintenance, replacement, or repair occurred. If the railroad elects to maintain an electronic record, the railroad must satisfy the conditions listed in § 299.11.

(ii) The railroad shall retain these records for a period of one year.

(iii) The railroad shall establish an internal, auditable, monitorable system that contains these records.

(j) *Trainset sanitation facilities for employees.* Sanitation facilities shall be provided for crewmembers either:

(1) On the trainset, that meet otherwise applicable sanitation standards, which are accessible at frequent intervals during the course of their work shift; or

(2) Ready access to railroad-provided sanitation facilities outside of the trainset.

(k) *Speed indicators.* (1) Each trainset controlling cab shall be equipped with a speed indicator which is—

(i) Accurate within ±2 km/h (1.24 miles per hour) for speed lower than 30 km/h (18.6 miles per hour), then increasing linearly up to ±12 km/h (7.5 miles per hour) at 500 km/h (311 miles per hour); and

(ii) Clearly readable from the driver's normal position under all light conditions.

(2) The speed indicator shall be based on a system of independent on-board speed measurement sources guaranteeing the accuracy level specified in paragraph (a)(1) of this section under all operational conditions. The system shall be automatically monitored for inconsistencies and the driver shall be automatically notified of any inconsistency potentially compromising this accuracy level.

(3) The speed indicator shall be calibrated periodically as defined in the railroad's inspection, testing, and maintenance program.

(l) *Cab lights.* (1) Each trainset cab shall have cab lights which will provide sufficient illumination for the control instruments, meters, and gauges to enable the driver to make accurate readings from his or her normal positions in the cab. These lights shall be located, constructed, and maintained so that light shines only on those parts requiring illumination and does not interfere with the driver's vision of the track and signals. Each trainset cab shall also have a conveniently located light that can be readily turned on and off by the driver operating the trainset and that provides sufficient illumination for them to read trainset orders and timetables.

(2) Cab passageways and compartments shall be illuminated.

§ 299.433 Exterior lights.

(a) *Headlights.* Each leading end of a trainset shall be equipped with two or more headlights.

(1) Each headlight shall produce 80,000 candela.

(2) Headlights shall be arranged to illuminate signs in the right-of-way.

(3) Headlights shall be recognized 600 m (1,968 feet) ahead of the cab car by a driver in another trainset or a maintenance person standing in the right-of-way under clear weather conditions.

(b) *Taillights (marking devices).* (1) The trailing end of the trainset shall be equipped with two red taillights;

(2) Each taillight shall be located at least 1.2 m (3.9 feet) above rail;

(3) Each taillight shall be recognizable 200 m (656 feet) ahead of the cab car by a driver in another trainset or a maintenance person standing in the right-of-way under clear weather conditions;

(4) Taillights of the trailing end of the trainset shall be on when the trainset is in operation;

(5) Taillights shall not be on in the direction of trainset travel, except if the driver shall re-position the trainset in a station. Such re-positioning operations shall be done in accordance with the railroad's operating rules; and

(6) In an emergency situation, the headlight on the rear of the trainset may serve as the taillights in accordance with the railroad's operating rules.

§ 299.435 Electrical system design.

(a) *Overhead collector systems.* (1) Pantographs shall be so arranged that they can be operated from the driver's normal position in the cab. Pantographs that automatically rise when released shall have an automatic locking device to secure them in the down position.

(2) Each overhead collector system, including the pantograph, shall be equipped with a means to electrically ground any uninsulated parts to prevent the risk of electrical shock when working on the system.

(3) Means shall be provided to permit the driver to determine that the pantograph is in its lowest position, and for securing the pantograph if necessary, without the need to mount the roof of the trainset.

(4) Each trainset equipped with a pantograph operating on an overhead collection system shall also be equipped with a means to safely lower the pantograph in the event of an emergency. If an emergency pole is used for this purpose, that part of the pole which can be safely handled shall be marked to so indicate. This pole shall be protected from moisture and damage when not in use. Means of securement and electrical isolation of a damaged pantograph, when it cannot be performed automatically, shall be addressed in the railroad's operating rules.

(b) *Circuit protection.* (1) Each auxiliary circuit shall be provided with a circuit breaker or equivalent current-limiting devices located as near as practicable to the point of connection to the source of power for that circuit. Such protection may be omitted from circuits controlling safety-critical devices.

(2) The 25-kV main power line shall be protected with a lightning arrestor, automatic circuit breaker, and overload relay. The lightning arrestor shall be run by the most direct path possible to ground with a connection to ground of not less than No. 6 AWG. These overload protection devices shall be housed in an enclosure designed specifically for that purpose with the arc chute vented directly to outside air.

(3) Auxiliary power supply (440 VAC), providing power distribution, shall be provided with both overload and ground fault protection.

(c) *Main battery system.* (1) The main batteries shall be isolated from the cab and passenger seating areas by a non-combustible barrier.

(2) If batteries have the potential to vent explosive gases, the batteries shall be adequately ventilated to prevent accumulation of explosive concentrations of these gases.

(3) Battery chargers shall be designed to protect against overcharging.

(4) Battery circuits shall include an emergency battery cut-off switch to completely disconnect the energy stored in the batteries from the load.

(d) *Capacitors for high-energy storage.* (1) Capacitors, if provided, shall be isolated from the cab and passenger seating areas by a non-combustible barrier.

(2) Capacitors shall be designed to protect against overcharging and overheating.

(e) *Electromagnetic interference (EMI) and electromagnetic compatibility (EMC).* (1) The railroad shall ensure electromagnetic compatibility of the safety-critical equipment systems with their environment. Electromagnetic compatibility can be achieved through equipment design or changes to the operating environment.

(2) The electronic equipment shall not produce electrical noise that interferes with trainline control and communications or with wayside signaling systems.

(3) To contain electromagnetic interference emissions, suppression of transients shall be at the source wherever possible.

(4) Electrical and electronic systems of equipment shall be capable of operation in the presence of external electromagnetic noise sources.

(5) All electronic equipment shall be self-protected from damage or improper operation, or both, due to high voltage transients and long-term over-voltage or under-voltage conditions. This includes protection from both power frequency and harmonic effects as well as protection from radio frequency signals into the microwave frequency range.

(f) *Insulation or grounding of metal parts.* All unguarded noncurrent-carrying metal parts subject to becoming charged shall be grounded or thoroughly insulated.

(g) *High voltage markings: doors, cover plates, or barriers.* External surfaces of all doors, cover plates, or barriers providing direct access to high voltage equipment shall be conspicuously and legibly marked ''DANGER–HIGH VOLTAGE'' or with the word ''DANGER'' and the normal voltage carried by the parts so protected. Labels shall be retro-reflective.

(h) *Hand-operated switches.* All hand-operated switches carrying currents with a potential of more than 150 volts that may be operated while under load shall be covered and shall be operative from the outside of the cover. Means shall be provided to show whether the switches are open or closed. Switches that should not be operated while under load shall be conspicuously and legibly marked with the words ''must not be operated under load'' and the voltage carried.

(i) *Conductors; jumpers; cable connections.* (1) Conductor sizes shall be selected on the basis of current-carrying capacity, mechanical strength, temperature, flexibility requirements, and maximum allowable voltage drop. Current-carrying capacity shall be derated for grouping and for operating temperature.

(2) Jumpers and cable connections between trainset units shall be located and guarded to provide sufficient vertical clearance. They may not hang with one end free.

(3) Cable and jumper connections between trainset units may not have any of the following conditions:

(i) Broken or badly chafed insulation;

(ii) Broken plugs, receptacles, terminals, or trainline pins; and

(iii) Broken or protruding strands of wire.

(j) *Traction motors.* All traction motors shall be in proper working order, or safely cut-out.

§ 299.437 Automated monitoring.

(a) Each trainset shall be equipped to monitor the performance of the following systems or components:

(1) Reception of cab and trainset control signals;

(2) Electric brake status;

(3) Friction brake status;

(4) Fire detection systems, if so equipped;

(5) Auxiliary power status;

(6) Wheelslide;

(7) On-board bearing-temperature sensors;

(8) Door open/closed status; and

(9) Bogie vibration detection.

(b) When any of the monitored parameters are out of predetermined

limits, an alert shall be sent immediately to the driver. The railroad's operating rules shall control trainset movement when the monitored parameters are out of predetermined limits.

(c) The railroad shall develop appropriate operating rules to address driver and equipment performance in the event that the automatic monitoring system becomes defective.

(d) The monitoring system shall be designed with an automatic self-test feature that notifies the driver that the monitoring capability is functioning correctly and alerts the driver when a system failure occurs.

§ 299.439 Event recorders.

(a) *Duty to equip and record.* Each trainset shall be equipped with an operative event recorder that monitors and records as a minimum all safety data required by paragraph (b) of this section. The event recorder shall record the most recent 48 hours of operational data of the trainset on which it is installed.

(b) *Equipment requirements.* Event recorders shall monitor and record data elements or information needed to support the data elements required by paragraph (c) of this section. The data shall be recorded with at least the accuracy required of the indicators displaying any of the required data elements to the driver.

(c) *Data elements.* The event recorder shall be equipped with a certified crashworthy event recorder memory module that meets the requirements of appendix A to this part. The certified event recorder memory module shall be mounted for its maximum protection. The event recorder shall record, and the certified crashworthy event recorder memory module shall retain, the following data elements or information needed to support the data elements:

(1) Trainset speed;

(2) Selected direction of motion;

(3) Date and time;

(4) Distance traveled;

(5) Throttle position;

(6) Applications and operations of the trainset brake system, including urgent and emergency applications. The system shall record, or provide a means of determining, that a brake application or release resulted from manipulation of brake controls at the position normally occupied by the driver. In the case of a brake application or release that is responsive to a command originating from or executed by an on-board computer (*e.g.,* electronic braking system controller, controlling cab electronic control system, or trainset control computer), the system shall record, or provide a means of determining, the involvement of any such computer;

(7) Applications and operations of the regenerative brake;

(8) Cab signal aspect(s);

(9) Urgent brake application(s);

(10) Passenger brake alarm request;

(11) Wheel slip/slide alarm activation (with a property-specific minimum duration);

(12) Trainset number;

(13) Trainset tractive effort (positive and negative);

(14) Trainset brake cylinder pressures;

(15) Cruise control on/off, if so equipped and used;

(16) Bogie vibration detection;

(17) Door status opened/closed; and

(18) Safety-critical trainset control data routed to the controlling driver's display with which the driver is required to comply, specifically including text messages conveying mandatory directives and maximum authorized speed. The specific information format, content, and proposed duration for retention of such data shall be specified in the PTC Safety Plan submitted for the trainset control system under subpart B, subject to FRA approval. If it can be calibrated against other data required by this part, such trainset control data may, at the election of the railroad, be retained in a separate certified crashworthy memory module.

(d) *Response to defective equipment.* A trainset on which the event recorder has been taken out of service may remain in-service only until the next pre-service inspection. A trainset with an inoperative event recorder is not deemed to be in improper condition, unsafe to operate, or a non-complying trainset under § 299.447.

(e) *Annual tests.* (1) The railroad's inspection, testing, and maintenance program under subpart G of this part shall require annual testing of the event recorder. All testing under this section shall be performed at intervals that do not exceed 368 calendar days.

(2) A microprocessor-based event recorder with a self-monitoring feature equipped to verify that all data elements required by this part are recorded, requires further maintenance and testing only if either of the following conditions exist:

(i) The self-monitoring feature displays an indication of a failure. If a failure is displayed, further maintenance and testing must be performed until a subsequent test is successful. When a successful test is accomplished, a record, in any medium, shall be made of that fact and of any maintenance work necessary to achieve the successful result. This record shall be available at the location where the trainset is maintained until a record of a subsequent successful test is filed; or

(ii) A download of the event recorder, taken within the preceding 30 days and reviewed for the previous 48 hours of trainset operation, reveals a failure to record a regularly recurring data element or reveals that any required data element is not representative of the actual operations of the trainset during this time period. If the review is not successful, further maintenance and testing shall be performed until a subsequent test is successful. When a successful test is accomplished, a record, in any medium, shall be made of that fact and of any maintenance work necessary to achieve the successful result. This record shall be kept at the location where the trainset is maintained until a record of a subsequent successful test is filed. The download shall be taken from information stored in the certified crashworthy crash hardened event recorder memory module.

(f) *Preserving accident data.* If any trainset equipped with an event recorder, or any other trainset mounted recording device or devices designed to record information concerning the functioning of a trainset, is involved in an accident/incident that is required to be reported to FRA under part 225 of this chapter, the railroad shall, to the extent possible, and to the extent consistent with the safety of life and property, preserve the data recorded by each such device for analysis by FRA in accordance with § 299.11. This preservation requirement permits the railroad to extract and analyze such data, provided the original downloaded data file, or an unanalyzed exact copy of it, shall be retained in secure custody and shall not be utilized for analysis or any other purpose except by direction of FRA or the National Transportation Safety Board. This preservation requirement shall expire one (1) year after the date of the accident/incident unless FRA or the Board notifies the railroad in writing that the data are desired for analysis.

(g) *Relationship to other laws.* Nothing in this section is intended to alter the legal authority of law enforcement officials investigating potential violation(s) of Federal or State criminal law(s), and nothing in this chapter is intended to alter in any way the priority of National Transportation Safety Board investigations under 49 U.S.C. 1131 and 1134, nor the authority of the Secretary of Transportation to investigate railroad accidents under 49 U.S.C. 5121, 5122, 20107, 20111, 20112, 20505, 20702, 20703, and 20902.

(h) *Disabling event recorders.* Any individual who willfully disables an event recorder, or who tampers with or alters the data recorded by such a device is subject to civil penalty as provided in part 218 of this chapter, and to disqualification from performing safety-sensitive functions on a railroad under subpart D of part 209 of this chapter.

§ 299.441 Trainset electronic hardware and software safety.

(a) *Purpose and scope.* The requirements of this section apply to all safety-critical electronic control systems, subsystems, and components on the trainsets, except for on-board signaling and trainset control system components that must meet the software safety requirements defined in subpart B of this part.

(b) *Applicability.* (1) The trainsets shall utilize the service-proven safety-critical electronic control systems, subsystems, and components as used on the N700 to control and monitor safety-critical components.

(2) Any modifications to the existing service-proven safety-critical electronic control systems, subsystems, and components shall be subject to the requirements defined in paragraph (c) of this section.

(i) The railroad shall assure that the suppliers of new or modified safety-critical systems, subsystems, and components utilize an industry recognized hardware and software development process which is evaluated and certified by an independent third-party assessor authorized by the industry standard utilized.

(ii) The railroad shall require that all suppliers submit the certifications and audit results as applicable. All such certifications shall be made available to FRA upon request.

(3) Any major upgrades or introduction of new safety-critical technology shall be subject to § 299.613(d).

(c) *Electronic hardware and software safety program.* The railroad shall develop and maintain a written electronic hardware and software safety program to guide the design, development, testing, integration, and verification of all new or modified safety-critical trainset hardware and software.

(1) *Hardware and software safety program description.* The hardware and software safety program shall include a description of how the following will be implemented to ensure safety and reliability:

(i) The hardware and software design process;

(ii) The hardware and software design documentation;

(iii) The hardware and software hazard analysis;

(iv) Hardware and software safety reviews;

(v) Hardware and software hazard monitoring and tracking;

(vi) Hardware and software integration safety testing;

(vii) Demonstration of overall hardware and software system safety as part of the pre-revenue service testing of the equipment; and

(viii) Safety-critical changes and failures.

(2) *Safety analysis.* The hardware and software safety program shall be based on a formal safety methodology that includes a FMECA; verification and validation testing for all hardware and software components and their interfaces; and comprehensive hardware and software integration testing to ensure that the hardware and software system functions as intended.

(3) *Compliance.* The railroad shall comply with the elements of its hardware and software safety program that affect the safety of the passenger trainset.

(4) *Safety-critical changes and failures.* Whenever a planned safety-critical design change is made to the safety-critical electronic control systems, subsystems and components (the products) that are in use by the railroad and subject to this subpart, the railroad shall—

(i) Notify FRA in accordance with § 299.9 of the design changes made by the product supplier;

(ii) Ensure that the safety analysis required under paragraph (c)(2) of this section is updated as required;

(iii) Conduct all safety-critical changes in a manner that allows the change to be audited;

(iv) Document all arrangements with suppliers for notification of all electronic safety-critical changes as well as safety-critical failures in the supplier's system, subsystem, or components, and the reasons for that change or failure from the suppliers, whether or not the railroad has experienced a failure of that safety-critical system, sub-system, or component;

(v) Specify the railroad's procedures for action upon receipt of notification of a safety-critical change or failure of an electronic system, sub-system, or component, and until the upgrade or revision has been installed;

(vi) Identify all configuration/revision control measures designed to ensure that safety-functional requirements and safety-critical hazard mitigation processes are not compromised as a result of any such change, and that any such change can be audited;

(vii) Require suppliers to provide notification of all electronic safety-critical changes as well as safety-critical failures in the supplier's system, subsystem, or components;

(ix) Document all arrangements with suppliers for notification of any and all electronic safety-critical changes as well as safety-critical failures in the supplier's system, subsystem, or components.

(d) *Specific requirements.* Hardware and software that controls or monitors a trainset's primary braking system shall either—

(1) Fail safely by initiating an emergency or urgent brake application in the event of a hardware or software failure that could impair the ability of the driver to apply or release the brakes; or

(2) Provide the driver access to direct manual control of the primary braking system (emergency or urgent braking).

(e) *Inspection, testing, and maintenance records.* The inspection, testing, and maintenance conducted by the railroad in accordance with § 299.445 shall be recorded in hardcopy or stored electronically. Electronic recordkeeping or automated tracking systems, subject to the provisions contained in § 299.11, may be utilized to store and maintain any testing or training record required by this subpart. Results of product testing conducted by a vendor in support of a safety analysis shall be provided to and recorded by the railroad.

(1) The testing records shall contain all of the following:

(i) The name of the railroad;

(ii) The location and date that the test was conducted;

(iii) The equipment tested;

(iv) The results of tests;

(v) The repairs or replacement of equipment;

(vi) Any preventative adjustments made; and

(vii) The condition in which the equipment is left.

(2) Each record shall be—

(i) Signed by the employee conducting the test, or electronically coded, or identified by the automated test equipment number;

(ii) Filed in the office of a supervisory official having jurisdiction, unless otherwise noted; and

(iii) Available for inspection and copying by FRA.

(3) The results of the testing conducted in accordance with this section shall be retained as follows:

(i) The results of tests that pertain to installation or modification of a product

shall be retained for the life-cycle of the product tested and may be kept in any office designated by the railroad;

(ii) The results of periodic tests required for the maintenance or repair of the product tested shall be retained until the next record is filed and in no case less than one year; and

(iii) The results of all other tests and training shall be retained until the next record is filed and in no case less than one year.

(f) *Review of safety analysis.* (1) Prior to the initial planned use of a new product as defined by paragraphs (b)(2) or (3) of this section, the railroad shall notify FRA in accordance with § 299.9 of the intent to place this product in service. The notification shall provide a description of the product, and identify the location where the complete safety analysis documentation and the testing are maintained.

(2) The railroad shall maintain and make available to FRA upon request all railroad or vendor documentation used to demonstrate that the product meets the safety requirements of the safety analysis for the life-cycle of the product.

(g) *Hazard tracking.* After a new product is placed in service in accordance with paragraphs (b)(2) or (3) of this section, the railroad shall maintain a database of all safety-relevant hazards encountered with the product. The database shall include all hazards identified in the safety analysis and those that had not been previously identified in the safety analysis. If the frequency of the safety-relevant hazards exceeds the threshold set forth in the safety analysis, then the railroad shall—

(1) Report the inconsistency to the Associate Administrator, within 15 days of discovery in accordance with § 299.9;

(2) Take immediate countermeasures to reduce the frequency of the safety-relevant hazard(s) below the threshold set forth in the safety analysis;

(3) Provide a final report to the Associate Administrator, on the results of the analysis and countermeasures taken to mitigate the hazard to meet the threshold set forth in the safety analysis when the problem is resolved. For hazards not identified in the safety analysis the threshold shall be exceeded at one occurrence; and

(4) Electronic or automated tracking systems used to meet the requirements contained in paragraph (g) of this section shall be in accordance with § 299.11.

(h) *Operations and maintenance manual.* The railroad shall maintain all supplier or vendor documents pertaining to the operation, installation, maintenance, repair, modification, inspection, and testing of the safety-critical electronic control systems, subsystems and components.

(i) *Training and qualification program.* Under § 299.13(c)(3), the railroad shall establish and implement a training and qualification program for the safety-critical electronic control systems, subsystems, and components subject to subpart G of this part prior to the safety-critical electronic control systems, subsystems, and components being placed in use.

(j) *Operating personnel training.* The training program required by § 299.13(c)(3) for any driver or other person who participates in the operation of a trainset using the safety-critical electronic control systems, subsystems and components shall address all the following elements:

(1) Familiarization with the electronic control system equipment on-board the trainset and the functioning of that equipment as part of the system and in relation to other on-board systems under that person's control;

(2) Any actions required of the operating personnel to enable or enter data into the system and the role of that function in the safe operation of the trainset;

(3) Sequencing of interventions by the system, including notification, enforcement, and recovery from the enforcement as applicable;

(4) Railroad operating rules applicable to control systems, including provisions for movement and protection of any unequipped passenger equipment, or passenger equipment with failed or cut-out controls;

(5) Means to detect deviations from proper functioning of on-board electronic control system equipment and instructions explaining the proper response to be taken regarding control of the trainset and notification of designated railroad personnel; and

(6) Information needed to prevent unintentional interference with the proper functioning of on-board electronic control equipment.

§ 299.443 Safety appliances.

(a) *Couplers.* (1) The leading and trailing ends of each trainset shall be equipped with an automatic rescue coupler that couples on impact.

(i) Uncoupling of the rescue coupler shall be done only at a trainset maintenance facility or other location where personnel can safely get under or between units.

(ii) The leading and the trailing ends of a trainset are not required to be equipped with sill steps or end or side handholds.

(2) The leading and trailing end couplers and uncoupling devices may be stored within a removable shrouded housing.

(3) Leading and trailing automatic couplers of trainsets shall be compatible with the railroad's rescue vehicles. A coupler adaptor can be used to meet this requirement.

(4) The railroad shall develop and implement rescue procedures that assure employee safety during rescue operations and shall be contained in the railroad's operating rules.

(5) Each unit within a trainset shall be semi-permanently coupled and shall only be uncoupled at a trainset maintenance facility or other locations identified by the railroad where the protections afforded in subpart B of part 218 of this chapter can be applied.

(6) The ends of units in a trainset that are semi-permanently coupled are not required to be equipped with automatic couplers, sill steps, end handholds or side handholds.

(b) *Crew access.* (1) Each trainset shall provide a minimum of two (2) locations per side, where crew members can board or disembark the trainset safely from ground level.

(2) Each location used for crew access shall be equipped with retractable stairs with handrails designed for safe access to the trainset from ground level.

§ 299.445 Trainset inspection, testing, and maintenance requirements.

(a) *General.* (1) The railroad shall develop a written inspection program for the rolling stock, in accordance with and approved under the requirements of § 299.713. As further specified in this section, the program shall describe in detail the procedures, equipment, and other means necessary for the safe operation of the passenger equipment, including all inspections set forth in paragraph (e) of this section. This information shall include a detailed description of the methods of ensuring accurate records of required inspections.

(2) The initial inspection, testing, and maintenance program submitted under § 299.713 shall, as a minimum, address the specific safety inspections contained in paragraphs (e)(1) through (4) of this section. The railroad may submit the procedures detailing the bogie inspections or general overhaul requirements contained in paragraph (e)(3) and (4) of this section, respectively, at a later date than the initial inspection, testing, and maintenance program, but not less than 180 days prior to the scheduled date of the first bogie inspection or general overhaul.

(b) *Identification of safety-critical items.* In addition to safety critical items identified under § 299.711(b), on-board

emergency equipment, emergency back-up systems, trainset exits and trainset safety-critical hardware and software systems in accordance with § 299.441 shall be deemed safety-critical.

(c) *Compliance.* The railroad shall adopt and comply with the approved inspection, testing, and maintenance program in accordance with § 299.703.

(d) *General condition.* The inspection, testing, and maintenance program shall ensure that all systems and components of the equipment are free of conditions that endanger the safety of the crew, passengers, or equipment. These conditions include, but are not limited to the following:

(1) A continuous accumulation of oil or grease;

(2) Improper functioning of a component;

(3) A crack, break, excessive wear, structural defect, or weakness of a component;

(4) A leak;

(5) Use of a component or system under conditions that exceed those for which the component or system is designed to operate; and

(6) Insecure attachment of a component.

(e) *Specific safety inspections.* The program under paragraph (a) of this section shall specify that all passenger trainsets shall receive thorough safety inspections by qualified individuals designated by the railroad at regular intervals. At a minimum, and in addition to the annual tests required for event recorder under § 299.439(e), the following shall be performed on each trainset:

(1) *Pre-service inspections.* (i) Each trainset in use shall be inspected at least once every two calendar days by qualified individuals at a location where there is a repair pit and access to the top of the trainset. The inspection shall verify the correct operation of on-board safety systems defined in the inspection, testing, and maintenance program. If any of the conditions defined as safety-critical in paragraph (b) of this section and § 299.711(b) are found during this inspection, the trainset shall not be put into service until that condition is rectified. The pre-service inspection shall include the following:

(A) Functional tests to determine the status of application and release of the service, emergency, and urgent air brakes using the monitoring system;

(B) Operational tests of the exterior doors; and

(C) A review of the log of on-board ATC equipment.

(ii) If the existence of any safety-critical conditions cannot be determined by use of an automated monitoring system, the railroad shall perform a visual inspection to determine if the condition exists.

(2) *Regular inspections.* The railroad shall perform a regular inspection on all trainsets in accordance with the test procedures and inspection criteria established in paragraph (a) of this section and at the intervals defined by paragraph (f) of this section. If any of the conditions defined as safety-critical in paragraph (b) of this section and § 299.711(b) are found during this inspection, the trainset shall not be put into service until that condition is rectified.

(3) *Bogie inspections.* The railroad shall perform a bogie inspection on all trainsets in accordance with the test procedures and inspection criteria established in paragraph (a) of this section and at the intervals defined by paragraph (f) of this section. If any of the conditions defined as safety-critical in paragraph (b) of this section and § 299.711(b) are found during this inspection, the trainset shall not be put into service until that condition is rectified.

(4) *General overhaul.* The railroad shall perform a general overhaul on all trainsets in accordance with the test procedures and inspection criteria established in paragraph (a) of this section and at the intervals defined by paragraph (f) of this section. If any of the conditions defined as safety-critical in paragraph (b) of this section and § 299.711(b) are found during this inspection, the trainset shall not be put into service until that condition is rectified.

(f) *Maintenance intervals.* The railroad's program established pursuant to paragraph (a) of this section shall include the railroad's scheduled maintenance intervals for all specific safety inspections in paragraph (e) of this section, as required by § 299.707.

(g) *Training and qualification program.* The railroad shall establish a training and qualification program as defined in § 299.13(c)(3) to qualify individuals to perform inspections, testing, and maintenance on the equipment. Only qualified individuals shall perform inspections, testing, and maintenance of the equipment.

(h) *Reporting and tracking of repairs to defective trainsets.* The railroad shall have in place prior to start of operations a reporting and tracking system for passenger trainsets with a defect not in conformance with this subpart. The reporting and tracking system shall record the following information:

(1) The identification number of the defective unit within a trainset, and trainset identification number;

(2) The date the defect was discovered;

(3) The nature of the defect;

(4) The determination made by a qualified individual whether the equipment is safe to run;

(5) The name of the qualified individual making such a determination;

(6) Any operating restrictions placed on the equipment; and

(7) Repairs made and the date that they were completed.

(i) *Retention of records.* At a minimum, the railroad shall keep the records described in paragraph (j) of each required inspection under this section in accordance with § 299.11. Each record shall be maintained for at least one year from the date of the inspection.

(j) *Availability of records.* The railroad shall make defect reporting and tracking records available to FRA upon request.

(k) *Brake system repair points.* The railroad shall designate brake system repair points in the inspection, testing, and maintenance program required by paragraph (a) of this section. No trainset shall depart a brake system repair point unless that trainset has a 100 percent operational brake system.

§ 299.447 Movement of defective equipment.

(a) A trainset with one or more conditions not in compliance with the list of safety critical defects identified in accordance with § 299.445(b) during a pre-service inspection required by § 299.445(e)(1) shall not be moved in revenue service and shall only be moved in accordance with paragraph (e) of this section.

(b) Except as provided in paragraph (c) of this section, and after departure in compliance with the pre-service inspection required by § 299.445(e)(1), a trainset with one or more conditions not in compliance with the list of safety critical defects identified in accordance with §§ 299.445(b) and 299.711(b) may be moved in revenue service only after the railroad has complied with all of the following:

(1) A qualified individual determines that it is safe to move the trainset, consistent with the railroad's operating rules;

(i) If appropriate, these determinations may be made based upon a description of the defective condition provided by a crewmember.

(ii) If the determinations required by this paragraph are made by an off-site qualified individual based on a description of the defective condition by on-site personnel, then a qualified individual shall perform a physical

inspection of the defective equipment, at the first location possible, in accordance with the railroad's inspection, testing, and maintenance program and operating rules, to verify the description of the defect provided by the on-site personnel.

(2) The qualified individual who made the determination in paragraph (b)(1) of this section, notifies the driver in charge of movement of the trainset, in accordance with the railroad's operating rules, of the maximum authorized speed, authorized destination, and any other operational restrictions that apply to the movement of the non-compliant trainset. This notification may be achieved through the tag required by paragraph (b)(3) of this section; and

(3) A tag bearing the words ''non-complying trainset'' and containing the following information, are securely attached to the control stand on each control cab of the trainset:

(i) The trainset number and unit or car number;

(ii) The name of the qualified individual making the determination in paragraph (b)(1) of this section;

(iii) The location and date of the inspection that led to the discovery of the non-compliant item;

(iv) A description of each defect;

(v) Movement restrictions, if any;

(vi) The authorized destination of the trainset; and

(vii) The signature, if possible, as well as the job title and location of the person making the determinations required by this section.

(4) Automated tracking systems used to meet the tagging requirements contained in paragraph (b)(3) of this section may be reviewed and monitored by FRA at any time to ensure the integrity of the system. FRA's Associate Administrator may prohibit or revoke the railroad's ability to utilize an automated tracking system in lieu of tagging if FRA finds that the automated tracking system is not properly secure, is inaccessible to FRA or the railroad's employees, or fails to track or monitor the movement of defective equipment adequately. Such a determination will be made in writing and will state the basis for such action.

(c) A trainset that develops a non-complying condition in service may continue in revenue service, so long as the requirements of paragraph (b) of this section are otherwise fully met, until the next pre-service inspection.

(d) In the event of an in-service failure of the braking system, the trainset may proceed in accordance with the railroad's operating rules relating to the percentage of operative brakes and at a speed no greater than the maximum authorized speed as determined by § 299.409(f)(4) so long as the requirements of paragraph (b) of this section are otherwise fully met, until the next pre-service inspection.

(e) A non-complying trainset may be moved without passengers within a trainset maintenance facility, at speeds not to exceed 16 km/h (10 mph), without meeting the requirements of paragraph (a) of this section where the movement is solely for the purpose of repair. The railroad shall ensure that the movement is made safely.

(f) Nothing in this section authorizes the movement of equipment subject to a Special Notice for Repair under part 216 of this chapter unless the movement is made in accordance with the restrictions contained in the Special Notice.

Subpart E—Operating Rules

§ 299.501 Purpose.

Through the requirements of this subpart, FRA learns the condition of the operating rules and practices in use by the railroad. The rules and practices covered by this subpart include the procedures for instruction and testing of all employees involved with the movement of rail vehicles, including drivers, on-board attendants, station platform attendants, general control center staff, and all maintenance staff, which are necessary to ensure that they possess the requisite skill and knowledge of the rules and operating practices to maintain the safety of the system.

§ 299.503 Operating rules; filing and recordkeeping.

(a) Prior to commencing operations, the railroad shall develop a code of operating rules, timetables, and timetable special instructions. The initial code of operating rules, timetables, and timetable special instructions shall be based on practices and procedures proven on the Tokaido Shinkansen system.

(b) The railroad shall keep one copy of its current code of operating rules, timetables, timetable special instruction, at its system headquarters, and shall make them available to FRA for inspection and copying during normal business hours. If the railroad elects to maintain an electronic record, the railroad must satisfy the conditions listed in § 299.11.

§ 299.505 Programs of operational tests and inspections; recordkeeping.

(a) *Requirement to conduct operational tests and inspections.* The railroad shall periodically conduct operational tests and inspections to determine the extent of employee knowledge, application, and compliance with its code of operating rules, timetables, and timetable special instructions in accordance with a written program retained at its system headquarters.

(b) *Railroad and railroad testing officer responsibilities.* (1) Each railroad officer who conducts operational tests and inspections (railroad testing officer) shall—

(i) Be qualified on the railroad's operating rules in accordance with § 299.507;

(ii) Be qualified on the operational testing and inspection program requirements and procedures relevant to the testing and inspections the officer will conduct;

(iii) Receive appropriate field training, as necessary to achieve proficiency, on each operational test or inspection that the officer is authorized to conduct; and

(iv) Conduct operational tests and inspections in accordance with the railroad's program of operational tests and inspections.

(2) The railroad shall maintain a record documenting qualification of each railroad testing officer. The record shall be retained by the railroad and shall be made available to representatives of the FRA for inspection and copying during normal business hours. If the railroad elects to maintain an electronic record, the railroad must satisfy the conditions listed in § 299.11.

(c) *Written program of operational tests and inspections.* Within 30 days of commencing operations, the railroad shall have a written program of operational tests and inspections in effect. The railroad shall maintain one copy of its current program for periodic performance of the operational tests and inspections required by paragraph (a) of this section, and shall maintain one copy of each subsequent amendment to the program as amendments are made. These records shall be retained at the system headquarters of the railroad for three calendar years after the end of the calendar year to which they relate. These records shall be made available to representatives of the FRA for inspection and copying during normal business hours. The program shall—

(1) Provide for operational testing and inspection under the various operating conditions on the railroad;

(2) Describe each type of operational test and inspection adopted, including the means and procedures used to carry it out;

(3) State the purpose of each type of operational test and inspection;

(4) State the frequency with which each type of operational test and inspection is conducted;

(5) The program shall address with particular emphasis those operating rules that cause or are likely to cause the most accidents or incidents, such as those accidents or incidents identified in the six-month reviews and the annual summaries as required under paragraphs (e) and (f) of this section;

(6) Identify the officer(s) by name and job title responsible for ensuring that the program of operational tests and inspections is properly implemented and is responsible for overseeing the entire program. The responsibilities of such officer(s) shall include, but not be limited to, ensuring that the railroad's testing officers are directing their efforts in an appropriate manner to reduce accidents/incidents and that all required reviews and summaries are completed; and

(7) Include a schedule for making the program fully operative within 210 days after it begins.

(d) *Records.* (1) The railroad shall keep a written or electronic record of the date, time, place, and result of each operational test and inspection that was performed in accordance with its program. Each record shall specify the officer administering the test and inspection and each employee tested. These records shall be retained at the system headquarters of the railroad for one calendar year after the end of the calendar year to which they relate. These records shall be made available to representatives of the FRA for inspection and copying during normal business hours.

(2) The railroad shall retain one copy of its current program for periodic performance of the operational tests and inspections required by paragraph (a) of this section and one copy of each subsequent amendment to such program. These records shall be retained for three calendar years after the end of the calendar year to which they relate at the system headquarters where the tests and inspections are conducted. These records shall be made available to representatives of the FRA for inspection and copying during normal business hours.

(e) *Reviews of tests and inspections and adjustments to the program of operational tests*—(1) *Reviews by the railroad.* Not less than once every 180 days the railroad's designated officer(s) shall conduct periodic reviews and analyses as provided in this paragraph and shall retain, at its system headquarters, one copy of the reviews. Each such review shall be completed within 30 days of the close of the period. The designated officer(s) shall conduct a written review of—

(i) The operational testing and inspection data for the system to determine compliance by the railroad testing officers with its program of operational tests and inspections required by paragraph (c) of this section. At a minimum, this review shall include the name of each railroad testing officer, the number of tests and inspections conducted by each officer, and whether the officer conducted the minimum number of each type of test or inspection required by the railroad's program;

(ii) Accident/incident data, the results of prior operational tests and inspections, and other pertinent safety data for the system to identify the relevant operating rules related to those accidents/incidents that occurred during the period. Based upon the results of that review, the designated officer(s) shall make any necessary adjustments to the tests and inspections required of railroad officers for the subsequent period(s); and

(iii) Implementation of the program of operational tests and inspections from a system perspective, to ensure that it is being utilized as intended, that the other reviews provided for in this paragraph have been properly completed, that appropriate adjustments have been made to the distribution of tests and inspections required, and that the railroad testing officers are appropriately directing their efforts.

(2) *Records retention.* The records of reviews required in paragraphs (e)(1) of this section shall be retained for a period of one year after the end of the calendar year to which they relate and shall be made available to representatives of FRA for inspection and copying during normal business hours.

(f) *Annual summary on operational tests and inspections.* Before March 1 of each calendar year, the railroad shall retain, at its system headquarters, one copy of a written summary of the following with respect to its previous year's activities: The number, type, and result of each operational test and inspection that was conducted as required by paragraphs (a) and (c) of this section. These records shall be retained for three calendar years after the end of the calendar year to which they relate and shall be made available to representatives of FRA for inspection and copying during normal business hours.

(g) *Electronic recordkeeping.* Nothing in this section precludes the railroad from maintaining the information required to be retained under this part in an electronic format provided that the railroad satisfy the conditions listed in § 299.11.

(h) *Disapproval of program.* Upon review of the program of operational tests and inspections required by this section, the Associate Administrator for Safety may, for cause stated, disapprove the program in whole or in part. Notification of such disapproval shall be made in writing and specify the basis for the disapproval decision. If the Associate Administrator for Safety disapproves the program—

(1) The railroad has 35 days from the date of the written notification of such disapproval to—

(i) Amend its program; or

(ii) Provide a written response in support of the program to the Associate Administrator for Safety. If the Associate Administrator for Safety still disapproves the program in whole or in part after receiving the railroad's written response, the railroad shall amend its program.

(2) A failure to adequately amend the program will be considered a failure to implement a program under this subpart.

§ 299.507 Program of instruction on operating rules; recordkeeping.

(a) To ensure that each railroad employee whose activities are governed by the railroad's operating rules understands those rules, the railroad periodically shall instruct each such employee on the meaning and application of its operating rules with a written program developed under § 299.13(c)(3) and retained at its system headquarters.

(b) Prior to commencing operations, the railroad shall file and retain one copy of its current program for the periodic instruction of its employees as required by paragraph (a) of this section and shall file and retain one copy of any amendment to that program as amendments are made. These records shall be retained at the railroad's system headquarters for one calendar year after the end of the calendar year to which they relate. These records shall be made available to representatives of the FRA for inspection and copying during normal business hours. This program shall—

(1) Describe the means and procedures used for instruction of the various classes of affected employees;

(2) State the frequency of instruction and the basis for determining that frequency;

(3) Include a schedule for completing the initial instruction of employees who are already employed when the program begins;

(4) Begin on the date of commencing operations; and

(5) Provide for initial instruction of each employee hired after the program begins.

(c) The railroad is authorized to retain by electronic recordkeeping its program for periodic instruction of its employees on operating rules, provided that the requirements stated in § 299.11 are satisfied.

Subpart F—System Qualification Tests

§ 299.601 Responsibility for verification demonstrations and tests.

The railroad shall comply with the pre-revenue qualification tests and verification requirements set forth in this subpart to demonstrate the overall safety of the system, prior to revenue operations.

§ 299.603 Preparation of system-wide qualification test plan.

(a) Prior to execution of any tests as defined in this subpart, the railroad shall develop a system-wide qualification test plan, that identifies the tests that will be carried out, to demonstrate the operability of all system elements, including track and infrastructure, signal and trainset control system, communications, rolling stock, software, and operating practices, and the system as a whole.

(b) The system-wide qualification test plan shall be submitted to FRA in accordance with § 299.9 for review at least 180 days prior to testing. FRA shall notify the railroad, in writing, within 45 days of receipt of the railroad's submission, and identify any deficiencies in the test plan. FRA will notify the railroad of any procedures to be submitted for review. The plan shall include the following:

(1) A list of all tests to be conducted;

(2) A summary statement of the test objectives;

(3) A planned schedule for conducting the tests which indicates the sequence of testing and interdependencies; and

(4) The approach taken for—

(i) Verifying results of installation tests performed by contractors and manufacturers;

(ii) Functional and performance qualification testing of individual safety-related equipment, facilities, and subsystems in accordance with § 299.605;

(iii) Pre-revenue service system integration testing of the system per § 299.607, that includes vehicle/track system qualification testing per § 299.609;

(iv) Simulated revenue operations of the system per § 299.611;

(v) Compliance with operating rules as per subpart E of this part;

(vi) Training and qualification of all personnel involved in the test program to conduct tests safely and in accordance with operating rules;

(vii) Verification of all emergency preparedness procedures; and

(viii) Field testing of the railroad's uncertified PTC system and regression testing of its FRA-certified PTC system, under § 299.201.

(c) The railroad shall adopt and comply with the system-wide qualification test plan, including completion of all tests required by the plan.

(d) After FRA review of the system-wide test plan, detailed test procedures as required by paragraph (b) of this section shall be submitted 15 days prior to testing to FRA in accordance with § 299.9 for review.

(e) Each test procedure shall include the following elements:

(1) A clear statement of the test objectives. One of the principal test objectives shall be to demonstrate that the railroad's system meets the safety design and performance requirements specified in this part when operated in the environment in which it will be used;

(2) Any special safety precautions to be observed during the testing;

(3) A description of the railroad property or facilities to be used to conduct the tests;

(4) Prerequisites for conducting each test;

(5) A detailed description of how the tests are to be conducted. This description shall include—

(i) An identification of the systems and equipment to be tested;

(ii) The method by which the systems and equipment shall be tested;

(iii) The instrumentation to be used and calibration procedures;

(iv) The means by which the test results will be recorded, analyzed and reported to FRA;

(v) A description of the information or data to be obtained;

(vi) A description of how the information or data obtained is to be analyzed or used;

(vii) A description of any criteria to be used as safety limits during the testing;

(viii) The criteria to be used to evaluate performance of the systems and equipment. If system qualification is to be based on extrapolation of less than full-level testing results, the analysis done to justify the validity of the extrapolation shall be described; and

(ix) Inspection, testing, and maintenance procedures to be followed to ensure that testing is conducted safely.

(f) The railroad shall provide FRA notice at least 30 days in advance of the times and places of any domestic testing and notice at least 90 days in advance for testing not conducted domestically to permit FRA observation of such tests.

§ 299.605 Functional and performance qualification tests.

The railroad shall conduct functional and performance qualification tests, prior to commencing revenue operations, to verify that all safety-critical components meet all functional and all performance specifications.

§ 299.607 Pre-revenue service system integration testing.

(a) Prior to commencing revenue operations, the railroad shall conduct tests of the trainsets throughout the system to—

(1) Verify mechanical positioning of the overhead catenary system; and

(2) Verify performance of the trainset, track, and signal and trainset control systems.

(b) The railroad shall demonstrate safe operation of the system during normal and degraded-mode operating conditions. At a minimum, the following operation tests shall be performed:

(1) Slow-speed operation of a trainset;

(2) Verification of correct overhead catenary and pantograph interaction;

(3) Verification of trainset clearance at structures and passenger platforms;

(4) Incremental increase of trainset speed;

(5) Performance tests on trainsets to verify braking rates in accordance with § 299.409;

(6) Verification of vehicle noise;

(7) Verification of correct vehicle suspension characteristics;

(8) Vehicle/track system qualification as defined in § 299.609;

(9) Load tests with vehicles to verify relay settings and signal and communication system immunization;

(10) Monitoring of utility supply circuits and telephone circuits to ensure the adequacy of power supplies, and to verify that transient-related disturbances are within acceptable limits;

(11) Verification of vehicle detection due to shunting of signal system circuits;

(12) Verification of safe operation of the signal and trainset control system as required by subpart B of this part;

(13) Tests of trainset radio reception during system-wide vehicle operation; and

(14) Verification of electromagnetic interference/electromagnetic compatibility between various subsystems.

§ 299.609 Vehicle/track system qualification.

(a) *General.* All vehicles types intended to operate in revenue service shall be qualified for operation in accordance with this subpart. A qualification program shall be used to demonstrate that the vehicle/track system will not exceed the wheel/rail force safety limits, and the carbody and bogie acceleration criteria specified in paragraph (h) of this section—

(1) At any speed up to and including 10 km/h (6 mph) above the proposed maximum operating speed; and

(2) On track meeting the requirements for the class of track associated with the proposed maximum operating speed as defined in § 299.309. For purposes of qualification testing, speeds may exceed the maximum allowable operating speed for the class of track in accordance with the test plan approved by FRA.

(b) *New vehicle/track system qualification.* Vehicle types not previously qualified under this subpart shall be qualified in accordance with the requirements of this paragraph (b).

(1) *Carbody acceleration.* For vehicle types intended to operate in revenue service at track class H4 speeds or above, qualification testing conducted over a representative segment of the route shall demonstrate that the vehicle type will not exceed the carbody lateral and vertical acceleration safety limits specified in paragraph (h) of this section.

(2) *Bogie lateral acceleration.* For vehicle types intended to operate at track class H4 speeds or above, qualification testing conducted over a representative segment of the route shall demonstrate that the vehicle type will not exceed the bogie lateral acceleration safety limit specified in paragraph (h) of this section.

(3) *Measurement of wheel/rail forces.* For vehicle types intended to operate at track class H4 speeds or above, qualification testing conducted over a representative segment of the route shall demonstrate that the vehicle type will not exceed the wheel/rail force safety limits specified in paragraph (h) of this section.

(c) *Previously qualified vehicle/track system.* Vehicle/track systems previously qualified under this subpart for a track class and cant deficiency on one route may be qualified for operation at the same class and cant deficiency on another route through testing to demonstrate compliance with paragraph (a) of this section in accordance with the following:

(1) *Carbody acceleration.* For vehicle types intended to operate at track class H4 speeds and above, qualification testing conducted over a representative segment of the new route shall demonstrate that the vehicle type will not exceed the carbody lateral and vertical acceleration safety limits specified in paragraph (h) of this section.

(2) *Bogie lateral acceleration.* For vehicle types intended to operate at track class H4 speeds or above, measurement of bogie lateral acceleration during qualification testing shall demonstrate that the vehicle type will not exceed the bogie lateral acceleration safety limit specified in paragraph (h) of this section. Measurement of bogie lateral acceleration, if conducted, shall be performed over a representative segment of the new route.

(d) *Vehicle/track system qualification testing plan.* To obtain the data required to support the qualification program outlined in paragraphs (b) and (c) of this section, the railroad shall submit a qualification testing plan as required by § 299.603(b) at least 60 days prior to testing, requesting approval to conduct the testing at the desired speeds and cant deficiencies. This test plan shall provide for a test program sufficient to evaluate the operating limits of the track and vehicle type and shall include—

(1) Identification of the representative segment of the route for qualification testing;

(2) Consideration of the operating environment during qualification testing, including operating practices and conditions, the signal system, and trainset on adjacent tracks;

(3) The maximum angle found on the gauge face of the designed (newly-profiled) wheel flange referenced with respect to the axis of the wheelset that will be used for the determination of the Single Wheel L/V Ratio safety limit specified in paragraph (h) of this section; and

(4) A target maximum testing speed in accordance with paragraph (a) of this section and the maximum testing cant deficiency.

(e) *Qualification testing.* Upon FRA approval of the vehicle/track system qualification testing plan, qualification testing shall be conducted in two sequential stages as required in this subpart.

(1) Stage-one testing shall include demonstration of acceptable vehicle dynamic response of the subject vehicle as speeds are incrementally increased—

(i) On a segment of tangent track, from acceptable track class H4 speeds to the target maximum test speed; and

(ii) On a segment of curved track, from the speeds corresponding to 76 mm (3 inches) of cant deficiency to the maximum testing cant deficiency.

(2) When stage-one testing has successfully demonstrated a maximum safe operating speed and cant deficiency, stage-two testing shall commence with the subject equipment over a representative segment of the route as identified in paragraph (d)(1) of this section.

(i) A test run shall be conducted over the route segment at the speed the railroad will request FRA to approve for such service.

(ii) An additional test run shall be conducted at 10 km/h (6 mph) above this speed.

(3) When conducting stage-one and stage-two testing, if any of the monitored safety limits are exceeded on any segment of track, testing may continue provided that the track location(s) where any of the limits are exceeded be identified and test speeds be limited at the track location(s) until corrective action is taken. Corrective action may include making adjustments to the track, to the vehicle, or to both of these system components.

(4) Prior to the start of the qualification testing program, a qualifying Track Geometry Measurement System (TGMS) shall be operated over the intended route within 30 calendar days prior to the start of the qualification testing program to verify compliance with the track geometry limits specified in § 299.311.

(f) *Qualification testing results.* The railroad shall submit a report to FRA detailing all the results of the qualification program in accordance with § 299.613. The report shall be submitted at least 60 days prior to the intended operation of the equipment in revenue service over the route.

(g) *Cant deficiency.* Based on the test results and all other required submissions, FRA will approve a maximum trainset speed and value of cant deficiency for revenue service, normally within 45 days of receipt of all the required information. FRA may impose conditions necessary for safely operating at the maximum approved trainset speed and cant deficiency.

(h) *Vehicle/track interaction regulatory limits.* The following vehicle/track interaction regulatory limits shall not be exceeded during qualification testing in accordance with this section.

BILLING CODE 4910–06–P

Table 1 to paragraph (h)			
Vehicle/Track Interaction Safety Limits			
Wheel-Rail Forces[1]			
Parameter	Safety Limit	Filter / Window	Requirements
Single Wheel Vertical Load Ratio	≥ 0.15	1.5 m (5 ft)	No wheel of the vehicle shall be permitted to unload to less than 15 percent of the static vertical wheel load for 1.5 m (5 ft) or more continuous meters. The static vertical wheel load is defined as the load that the wheel would carry when stationary on level track.
Single Wheel L/V Ratio	$\leq \frac{\tan(\delta) - 0.5}{1 + 0.5\tan(\delta)}$	1.5 m (5 ft)	The ratio of the lateral force that any wheel exerts on an individual rail to the vertical force exerted by the same wheel on the rail shall not be greater than the safety limit calculated for the wheel's flange angle (δ) for 1.5 m (5 ft) or more continuous meters.
Net Axle Lateral L/V Ratio	$\leq 0.4 + \frac{22.24}{Va}$	1.5 m (5 ft)	The net axle lateral force, in kN, exerted by any axle on the track shall not exceed a total of 22.24 kN (5 kips) plus 40 percent of the static vertical load that the axle exerts on the track for 1.5 m (5 ft) or more continuous meters. Va = static vertical axle load (kN)
Bogie Side L/V Ratio	≤ 0.6	1.5 m (5 ft)	The ratio of the lateral forces that the wheels on one side of any bogie exert on an individual rail to the vertical forces exerted by the same wheels on that rail shall not be greater than 0.6 for 1.5 m (5 ft) or more continuous meters.

Carbody Accelerations[2]		
Parameter	All Vehicles	Requirements
Carbody Lateral (Transient)	≤ 0.35g peak-to-peak 1 sec window[3] excludes peaks < 50 msec	The peak-to-peak accelerations, measured as the algebraic difference between the two extreme values of measured acceleration in any 1-second time period, excluding any peak lasting less than 50 milliseconds, shall not exceed 0.35g for all vehicles.
Carbody Lateral (Sustained Oscillatory)	≤ 0.10g RMS_t[4] 4 sec window[3] 4 sec sustained	Sustained oscillatory lateral acceleration of the carbody shall not exceed the prescribed (root mean squared) safety limits of 0.10g for all vehicles. Root mean squared values shall be determined over a sliding 4- second window with linear trend removed and shall be sustained for more than 4 seconds.
Carbody Vertical (Transient)	≤ 0.45g peak-to-peak 1 sec window[3] excludes peaks < 50 msec	The peak-to-peak accelerations, measured as the algebraic difference between the two extreme values of measured acceleration in any one second time period, excluding any peak lasting less than 50 milliseconds, shall not exceed 0.45g for all vehicles.
Carbody Vertical (Sustained Oscillatory)	≤ 0.16g RMS_t[4] 4 sec window[3] 4 sec sustained	Sustained oscillatory vertical acceleration of the carbody shall not exceed the prescribed (root mean squared) safety limit of 0.16g for all vehicles. Root mean squared values shall be determined over a sliding 4-second window with linear trend removed and shall be sustained for more than 4 seconds.

Bogie Lateral Acceleration[5]			
Parameter	Safety Limit	Filter / Window	Requirements
Bogie Lateral Acceleration	≤ 0.30g RMS_t[4]	2 sec window[3] 2 sec sustained	Bogie hunting shall not develop below the maximum authorized speed. Bogie hunting is defined as a sustained cyclic oscillation of the bogie evidenced by lateral accelerations exceeding 0.30g root mean squared for more than 2 seconds. Root mean squared values shall be determined over a sliding 2-second window with linear trend removed.

[1] The lateral and vertical wheel forces shall be measured and processed through a low pass filter (LPF) with a minimum cut-off frequency of 25 Hz. The sample rate for wheel force data shall be at least 250 samples per second.
[2] Carbody accelerations in the vertical and lateral directions shall be measured by accelerometers oriented and located in accordance with § 299.337(c)(3).
[3] Acceleration measurements shall be processed through an LPF with a minimum cut-off frequency of 10 Hz. The sample rate for acceleration data shall be at least 100 samples per second.
[4] RMS_t = RMS with linear trend removed.
[5] Bogie lateral acceleration shall be measured by accelerometers mounted on the bogie frame at a longitudinal location as close as practicable to an axle's centerline, or if approved by FRA, at an alternate location.

BILLING CODE 4910–06–C

§ 299.611 Simulated revenue operations.

(a) The railroad shall conduct simulated revenue operations for a minimum period of two weeks prior to revenue operations to verify overall system performance, and provide operating and maintenance experience.

(b) The railroad shall maintain a log of tests conducted during the simulated revenue operations period. This log of tests shall identify any problems encountered during testing, and actions necessary to correct defects in workmanship, materials, equipment, design, or operating parameters.

(c) The railroad shall implement all actions necessary to correct safety defects, as identified by the log prior to the initiation of revenue service.

§ 299.613 Verification of compliance.

(a) The railroad shall prepare a report detailing the results of functional and performance qualification tests, pre-revenue service system integration testing, and vehicle/track system qualification tests required under §§ 299.605, 299.607, and 299.609 respectively. The report shall identify any problems encountered during testing, and alternative actions necessary to correct defects in workmanship, materials, equipment, design, or operating parameters.

(b) The railroad shall implement all actions necessary to correct defects, as identified by the report.

(c) The railroad shall submit the report(s) required by paragraph (a) of this section to FRA prior to commencing simulated revenue operations and at least 60 days prior to the intended start of full revenue service per § 299.609(f).

(d)(1) Prior to implementing a major upgrade to any safety-critical system component or sub-system, or prior to introducing any new safety-critical technology, the railroad shall submit for FRA approval the detailed test procedures and/or analysis in accordance with § 299.603(d).

(2) The railroad shall prepare a report detailing the results of functional and performance qualification tests, pre-revenue service system integration testing, and vehicle/track system qualification tests required under §§ 299.605, 299.607, and 299.609 respectively pertaining to a major upgrade to any safety-critical system component or sub-system, or introduction of any new safety-critical technology. The report shall identify any problems encountered during testing, and alternative actions necessary to correct defects in workmanship, materials, equipment, design, or operating parameters.

Subpart G—Inspection, Testing, and Maintenance Program

§ 299.701 General requirements.

Under the procedures provided in § 299.713, the railroad shall obtain FRA approval of a written inspection, testing, and maintenance program. The program shall provide detailed information, consistent with the requirements set forth in §§ 299.337 through 299.349, and 299.445(a), on the inspection, testing, and maintenance procedures necessary for the railroad to safely operate its system. This information shall include a detailed description of—

(a) Safety inspection procedures, intervals, and criteria;

(b) Test procedures and intervals;

(c) Scheduled preventive maintenance intervals;

(d) Maintenance procedures; and

(e) Special testing equipment or measuring devices required to perform safety inspections and tests.

§ 299.703 Compliance.

After the railroad's inspection, testing, and maintenance program is approved by FRA pursuant to the requirements and procedures set forth in § 299.713, the railroad shall adopt and comply with the program, and shall perform—

(a) All inspections and tests described in the program in accordance with the procedures and criteria that the railroad identified as safety-critical; and

(b) All maintenance tasks and procedures described in the program in accordance with the procedures and intervals that the railroad identified as safety-critical.

§ 299.705 Standard procedures for safely performing inspection, testing, and maintenance, or repairs.

(a) The railroad shall establish written standard procedures for performing all safety-critical or potentially hazardous inspection, testing, maintenance, and repair tasks. These standard procedures shall—

(1) Describe in detail each step required to safely perform the task;

(2) Describe the knowledge necessary to safely perform the task;

(3) Describe any precautions that shall be taken to safely perform the task;

(4) Describe the use of any safety equipment necessary to perform the task;

(5) Be approved by the railroad's official responsible for safety;

(6) Be enforced by the railroad's supervisors responsible for accomplishing the tasks; and

(7) Be reviewed annually by the railroad. The railroad shall provide written notice to FRA in accordance with § 299.9 at least one month prior to the annual review. If the Associate Administrator or their designee indicates a desire to be present, the railroad shall provide a scheduled date and location for the annual review. If the Associate Administrator requests the annual review be performed on another date but the railroad and the Associate Administrator are unable to agree on a date for rescheduling, the annual review may be performed as scheduled.

(b) The inspection, testing, and maintenance program required by this section is not intended to address and should not include procedures to address employee working conditions that arise in the course of conducting the inspections, tests, and maintenance set forth in the program. When reviewing the railroad's program, FRA does not intend to review or approve any portion of the program that relates to employee working conditions.

§ 299.707 Maintenance intervals.

(a) The initial scheduled maintenance intervals shall be based on those in effect on the Tokaido Shinkansen system as required under § 299.13(c)(1).

(b) The maintenance interval of safety-critical components shall be changed only when justified by accumulated, verifiable operating data, and approved by FRA under paragraph § 299.713.

§ 299.709 Quality control program.

The railroad shall establish an inspection, testing, and maintenance quality control program enforced by the railroad or its contractor(s) to reasonably ensure that inspections, testing, and maintenance are performed in accordance with inspection, testing, and maintenance program established under this subpart.

§ 299.711 Inspection, testing, and maintenance program format.

The submission to FRA for each identified subsystem shall consist of two parts—

(a) The complete inspection, testing, and maintenance program, in its entirety, including all required information prescribed in § 299.701, and all information and procedures required for the railroad and its personnel to implement the program.

(b) A condensed version of the program that contains only those items identified as safety-critical, per § 299.703 submitted for approval by FRA under § 299.713.

§ 299.713 Program approval procedure.

(a) *Submission.* Except as provided in § 299.445(a)(2), the railroad shall submit for approval an inspection, testing, and maintenance program as described in § 299.711(b) not less than 180 days prior to pre-revenue service system integration testing. The program shall be submitted to FRA in accordance with § 299.9. If the railroad seeks to amend an approved program as described in § 299.711(b), the railroad shall file with FRA in accordance with § 299.9 for approval of such amendment not less than 60 days prior to the proposed effective date of the amendment. A program responsive to the requirements of this subpart or any amendment to the program shall not be implemented prior to FRA approval.

(b) *Contents.* Each program or amendment shall contain:

(1) The information prescribed in § 299.701 for such program or amendment; and

(2) The name, title, address, and telephone number of the primary person to be contacted with regard to review of the program, its content, or amendments.

(c) *Approval.* (1) Within 90 days of receipt of the initial inspection, testing, and maintenance program, FRA will review the program. The Associate Administrator will notify the primary railroad contact person in writing whether the inspection, testing, and maintenance program is approved and, if not approved, the specific points in which the program is deficient. Deficiencies identified shall be addressed as directed by FRA prior to implementing the program.

(2) FRA will review each proposed amendment to the program that relaxes an FRA-approved requirement within 45 days of receipt. The Associate Administrator will then notify the primary railroad contact person in writing whether the proposed amendment has been approved by FRA and, if not approved, the specific points in which the proposed amendment is deficient. The railroad shall correct any deficiencies as directed by FRA prior to implementing the amendment. For amendments proposing to make an FRA-approved program requirement more stringent, the railroad is permitted to implement the amendment prior to obtaining FRA approval.

(3) Following initial approval of a program or amendment, FRA may reopen consideration of the program or amendment for cause stated.

(4) The railroad may, subject to FRA review and approval under § 299.15, implement inspection, testing, maintenance procedures and criteria, incorporating new or emerging technology.

Appendix A to Part 299—Criteria for Certification of Crashworthy Event Recorder Memory Module

Section 299.439(c) requires that trainsets be equipped with an event recorder that includes a certified crashworthy event recorder memory module. This appendix prescribes the requirements for certifying an event recorder memory module (ERMM) as crashworthy, including the performance criteria and test sequence for establishing the crashworthiness of the ERMM as well as the marking of the event recorder containing the crashworthy ERMM.

A. General Requirements

(a) Each manufacturer that represents its ERMM as crashworthy shall, by marking it as specified in section B of this appendix, certify that the ERMM meets the performance criteria contained in this appendix and that test verification data are available to the railroad or to FRA upon request.

(b) The test verification data shall contain, at a minimum, all pertinent original data logs and documentation that the test sample preparation, test set up, test measuring devices and test procedures were performed by designated, qualified individuals using recognized and acceptable practices. Test verification data shall be retained by the manufacturer or its successor as long as the specific model of ERMM remains in service on any trainset.

(c) A crashworthy ERMM shall be marked by its manufacturer as specified in section B of this appendix.

B. Marking Requirements

(a) The outer surface of the event recorder containing a certified crashworthy ERMM shall be colored international orange. In addition, the outer surface shall be inscribed, on the surface allowing the most visible area, in black letters on an international orange background, using the largest type size that can be accommodated, with the words ''CERTIFIED DOT CRASHWORTHY'', followed by the ERMM model number (or other such designation), and the name of the manufacturer of the event recorder. This information may be displayed as follows:

CERTIFIED DOT CRASHWORTHY

Event Recorder Memory Module Model Number

Manufacturer's Name

Marking ''CERTIFIED DOT CRASHWORTHY'' on an event recorder designed for installation in the railroad's trainsets is the certification that all performance criteria contained in this appendix have been met and all functions performed by, or on behalf of, the manufacturer whose name appears as part of the marking, conform to the requirements specified in this appendix.

(b) Retro-reflective material shall be applied to the edges of each visible external surface of an event recorder containing a certified crashworthy ERMM.

C. Performance Criteria for the ERMM

An ERMM is crashworthy if it has been successfully tested for survival under conditions of fire, impact shock, static crush, fluid immersion, and hydro-static pressure contained in one of the two tables shown in this section of appendix B. (See Tables 1 and 2.) Each ERMM must meet the individual performance criteria in the sequence established in section D of this appendix. A performance criterion is deemed to be met if, after undergoing a test established in this appendix B for that criterion, the ERMM has preserved all of the data stored in it. The data set stored in the ERMM to be tested shall include all the recording elements required by § 299.439(c). The following tables describe alternative performance criteria that may be used when testing an ERMM's

crashworthiness. A manufacturer may utilize either table during its testing but may not combine the criteria contained in the two tables.

TABLE 1 TO APPENDIX A OF PART 299—ACCEPTABLE PERFORMANCE CRITERIA—OPTION A

Parameter	Value	Duration	Remarks
Fire, High Temperature	750 °C (1400 °F)	60 minutes	Heat source: Oven.
Fire, Low Temperature	260 °C (500 °F)	10 hours.	
Impact Shock	55g	100 ms	½ sine crash pulse.
Static Crush	110kN (25,000 lbf)	5 minutes.	
Fluid Immersion	#1 Diesel, #2 Diesel, Water, Salt Water, Lube Oil.	Any *single* fluid, 48 hours.	
	Fire Fighting Fluid	10 minutes, following immersion above.	Immersion followed by 48 hours in a dry location without further disturbance.
Hydrostatic Pressure	Depth equivalent = 15 m. (50 ft.)	48 hours at nominal temperature of 25 °C (77 °F).	

TABLE 2 TO APPENDIX A TO PART 299—ACCEPTABLE PERFORMANCE CRITERIA—OPTION B

Parameter	Value	Duration	Remarks
Fire, High Temperature	1,000 °C (1,832 °F)	60 minutes	Heat source: Open flame.
Fire, Low Temperature	260 °C (500 °F)	10 hours	Heat source: Oven.
Impact Shock—Option 1	23gs	250 ms.	
Impact Shock—Option 2	55gs	100 ms	½ sine crash pulse.
Static Crush	111.2kN (25,000 lbf), 44.5kN (10,000 lbf).	5 minutes. (single "squeeze")	Applied to 25% of surface of largest face.
Fluid Immersion	#1 Diesel, #2 Diesel, Water, Salt Water, Lube Oil, Fire Fighting Fluid.	48 hours *each*.	
Hydrostatic Pressure	46.62 psig (= 30.5 m. or 100 ft.)	48 hours at nominal temperature of 25 °C (77 °F).	

D. Testing Sequence

In order to reasonably duplicate the conditions an event recorder may encounter, the ERMM shall meet the various performance criteria, described in section C of this appendix, in a set sequence. (See Figure 1). If all tests are done in the set sequence (single branch testing), the same ERMM must be utilized throughout. If a manufacturer opts for split branch testing, each branch of the test must be conducted using an ERMM of the same design type as used for the other branch. Both alternatives are deemed equivalent, and the choice of single branch testing or split branch testing may be determined by the party representing that the ERMM meets the standard.

Figure 1 to Appendix A to Part 299 – Event Recorder Memory Module Sequential Testing

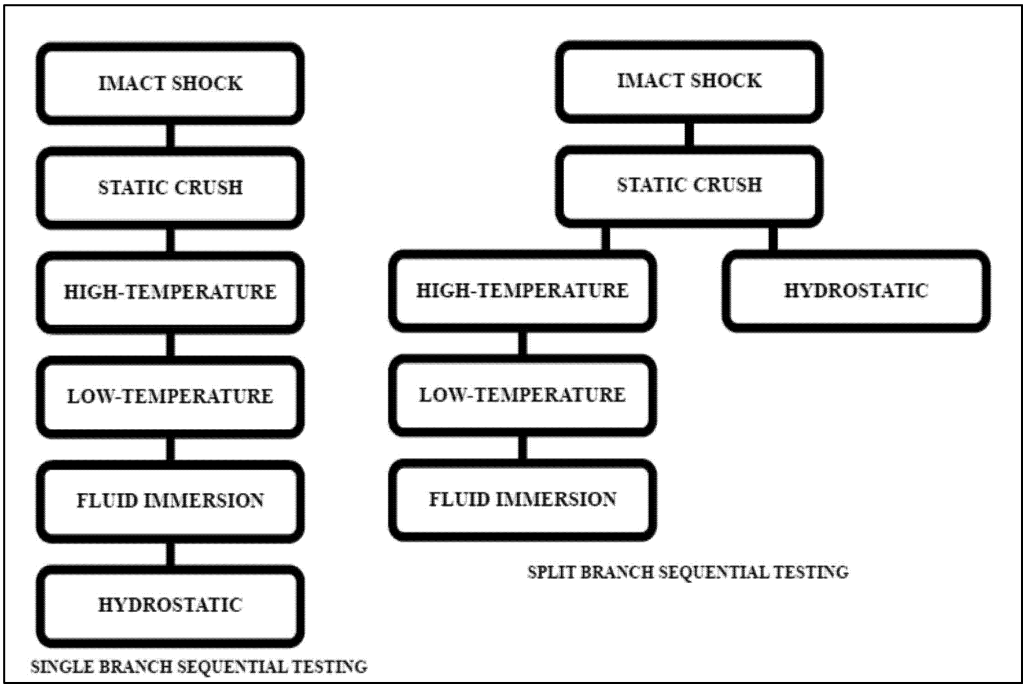

E. Testing Exception

If a new model ERMM represents an evolution or upgrade from an older model ERMM that was previously tested and certified as meeting the performance criteria contained in section C of this appendix, the new model ERMM need only be tested for compliance with those performance criteria contained in section C of this appendix that are potentially affected by the upgrade or modification. FRA will consider a performance criterion not to be potentially affected if a preliminary engineering analysis or other pertinent data establishes that the modification or upgrade will not change the performance of the older model ERMM against the performance criterion in question. The manufacturer shall retain and make available to FRA upon request any analysis or data relied upon to satisfy the requirements of this paragraph to sustain an exception from testing.

Appendix B to Part 299—Cab Noise Test Protocol

This appendix prescribes the procedures for the in-cab noise measurements for high-speed trainsets at speed. The purpose of the cab noise testing is to ensure that the noise levels within the cab of the trainset meet the minimum requirements defined within § 299.431(h).

A. Measurement Instrumentation

The instrumentation used shall conform to the requirements prescribed in appendix H to part 229 of this chapter.

B. Test Site Requirements

The test shall meet the following requirements:

(a) The passenger trainset shall be tested over a representative segment of the railroad and shall not be tested in any site specifically designed to artificially lower in-cab noise levels.

(b) All windows, doors, cabinets, seals, etc., must be installed in the trainset cab and be closed.

(c) The heating, ventilation and air conditioning (HVAC) system or a dedicated heating or air conditioner system must be operating on high, and the vents must be open and unobstructed.

C. Procedures for Measurement

(a) $L_{Aeq,T}$ is defined as the A-weighted, equivalent sound level for a duration of T seconds, and the sound level meter shall be set for A-weighting with slow response.

(b) The sound level meter shall be calibrated with the acoustic calibrator immediately before and after the in-cab tests. The calibration levels shall be recorded.

(c) Any change in the before and after calibration level(s) shall be less than 0.5 dB.

(d) The sound level meter shall be located:

(1) Laterally as close as practicable to the longitudinal centerline of the cab, adjacent to the driver's seat,

(2) Longitudinally at the center of the driver's nominal seating position, and

(3) At a height 1219 mm (48 inches) above the floor.

(e) The sound measurements shall be taken autonomously within the cab.

(f) The sound level shall be recorded at the maximum approved trainset speed (0/ − 3 km/h).

(g) After the passenger trainset speed has become constant at the maximum test speed and the in-cab noise is continuous, $L_{Aeq,T}$ shall be measured, either directly or using a 1 second sampling interval, for a minimum duration of 30 seconds at the measurement position ($L_{Aeq,\ 30s}$).

D. Reporting

To demonstrate compliance, the railroad shall prepare and submit a test report in accordance with § 299.613. As a minimum that report shall contain—

(a) Name(s) of person(s) conducting the test, and the date of the test.

(b) Description of the passenger trainset cab being tested, including: Car number and date of manufacture.

(c) Description of sound level meter and calibrator, including: Make, model, type, serial number, and manufacturer's calibration date.

(d) The recorded measurement during calibration and for the microphone location during operating conditions.

(e) The recorded measurements taken during the conduct of the test.

(f) Other information as appropriate to describe the testing conditions and procedure.

Issued in Washington, DC.

Quintin Kendall,

Deputy Administrator.

[FR Doc. 2020–20388 Filed 11–2–20; 8:45 am]

BILLING CODE 4910–06–P