AUTHENTICATED
U.S. GOVERNMENT
INFORMATION
GPO

FEDERAL REGISTER

Vol. 85 Monday,
No. 212 November 2, 2020

Pages 69119–69464

OFFICE OF THE FEDERAL REGISTER

The **FEDERAL REGISTER** (ISSN 0097–6326) is published daily, Monday through Friday, except official holidays, by the Office of the Federal Register, National Archives and Records Administration, under the Federal Register Act (44 U.S.C. Ch. 15) and the regulations of the Administrative Committee of the Federal Register (1 CFR Ch. I). The Superintendent of Documents, U.S. Government Publishing Office, is the exclusive distributor of the official edition. Periodicals postage is paid at Washington, DC.

The **FEDERAL REGISTER** provides a uniform system for making available to the public regulations and legal notices issued by Federal agencies. These include Presidential proclamations and Executive Orders, Federal agency documents having general applicability and legal effect, documents required to be published by act of Congress, and other Federal agency documents of public interest.

Documents are on file for public inspection in the Office of the Federal Register the day before they are published, unless the issuing agency requests earlier filing. For a list of documents currently on file for public inspection, see *www.federalregister.gov.*

The seal of the National Archives and Records Administration authenticates the Federal Register as the official serial publication established under the Federal Register Act. Under 44 U.S.C. 1507, the contents of the **Federal Register** shall be judicially noticed.

The **Federal Register** is published in paper and on 24x microfiche. It is also available online at no charge at *www.govinfo.gov*, a service of the U.S. Government Publishing Office.

The online edition of the **Federal Register** is issued under the authority of the Administrative Committee of the Federal Register as the official legal equivalent of the paper and microfiche editions (44 U.S.C. 4101 and 1 CFR 5.10). It is updated by 6:00 a.m. each day the **Federal Register** is published and includes both text and graphics from Volume 1, 1 (March 14, 1936) forward. For more information, contact the GPO Customer Contact Center, U.S. Government Publishing Office. Phone 202-512-1800 or 866-512-1800 (toll free). E-mail, *gpocusthelp.com.*

The annual subscription price for the **Federal Register** paper edition is $860 plus postage, or $929, for a combined **Federal Register, Federal Register** Index and List of CFR Sections Affected (LSA) subscription; the microfiche edition of the **Federal Register** including the **Federal Register** Index and LSA is $330, plus postage. Six month subscriptions are available for one-half the annual rate. The prevailing postal rates will be applied to orders according to the delivery method requested. The price of a single copy of the daily **Federal Register,** including postage, is based on the number of pages: $11 for an issue containing less than 200 pages; $22 for an issue containing 200 to 400 pages; and $33 for an issue containing more than 400 pages. Single issues of the microfiche edition may be purchased for $3 per copy, including postage. Remit check or money order, made payable to the Superintendent of Documents, or charge to your GPO Deposit Account, VISA, MasterCard, American Express, or Discover. Mail to: U.S. Government Publishing Office—New Orders, P.O. Box 979050, St. Louis, MO 63197-9000; or call toll free 1-866-512-1800, DC area 202-512-1800; or go to the U.S. Government Online Bookstore site, see *bookstore.gpo.gov.*

There are no restrictions on the republication of material appearing in the **Federal Register.**

How To Cite This Publication: Use the volume number and the page number. Example: 85 FR 12345.

Postmaster: Send address changes to the Superintendent of Documents, Federal Register, U.S. Government Publishing Office, Washington, DC 20402, along with the entire mailing label from the last issue received.

SUBSCRIPTIONS AND COPIES

PUBLIC

Subscriptions:

Paper or fiche	**202–512–1800**
Assistance with public subscriptions	**202–512–1806**

General online information **202–512–1530; 1–888–293–6498**

Single copies/back copies:

Paper or fiche	**202–512–1800**
Assistance with public single copies	**1–866–512–1800 (Toll-Free)**

FEDERAL AGENCIES

Subscriptions:

Assistance with Federal agency subscriptions:

Email	*FRSubscriptions@nara.gov*
Phone	**202–741–6000**

The Federal Register Printing Savings Act of 2017 (Pub. L. 115-120) placed restrictions on distribution of official printed copies of the daily **Federal Register** to members of Congress and Federal offices. Under this Act, the Director of the Government Publishing Office may not provide printed copies of the daily **Federal Register** unless a Member or other Federal office requests a specific issue or a subscription to the print edition. For more information on how to subscribe use the following website link: *https://www.gpo.gov/frsubs.*

Printed on recycled paper.

Contents

Federal Register

Vol. 85, No. 212

Monday, November 2, 2020

Agriculture Department
See Forest Service

Bureau of Consumer Financial Protection
RULES
Home Mortgage Disclosure (Regulation C); Correction of Supplementary Information, 69119–69120

Centers for Disease Control and Prevention
NOTICES
Agency Information Collection Activities; Proposals, Submissions, and Approvals, 69333–69334

Coast Guard
RULES
Safety Zones:
East River, New York, NY, 69172–69175
PROPOSED RULES
Safety Zones:
Christiansted Harbor, St. Croix, USVI, 69301–69303
Security Zones:
San Juan, Puerto Rico, 69299–69301

Commerce Department
See Economic Development Administration
See Foreign-Trade Zones Board
See International Trade Administration
See National Oceanic and Atmospheric Administration
See National Technical Information Service

Commodity Futures Trading Commission
NOTICES
Meetings; Sunshine Act, 69322

Defense Acquisition Regulations System
NOTICES
Agency Information Collection Activities; Proposals, Submissions, and Approvals:
Defense Federal Acquisition Regulation Supplement, 69322

Defense Department
See Defense Acquisition Regulations System
See Engineers Corps
NOTICES
Meetings:
Defense Business Board, 69322–69323

Drug Enforcement Administration
RULES
Implementation of the Substance Use-Disorder Prevention That Promotes Opioid Recovery and Treatment for Patients and Communities Act:
Dispensing and Administering Controlled Substances for Medication-Assisted Treatment, 69153–69167
PROPOSED RULES
Suspicious Orders of Controlled Substances, 69282–69299

Economic Development Administration
NOTICES
Trade Adjustment Assistance; Determinations, 69312

Education Department
NOTICES
Agency Information Collection Activities; Proposals, Submissions, and Approvals:
Education Stabilization Fund; Elementary and Secondary Emergency Education Relief Fund Recipient Data Collection Form, 69326
Education Stabilization Fund; Governor's Emergency Education Relief Fund Recipient Data Collection Form, 69325
Higher Education Emergency Relief Fund Data Collection Form, 69324–69325

Employment and Training Administration
NOTICES
Labor Surplus Area Classification, 69364–69365

Engineers Corps
NOTICES
Requests for Nominations:
Inland Waterways Users Board, 69323–69324

Environmental Protection Agency
RULES
National Pollutant Discharge Elimination System Electronic Reporting Rule:
Phase 2 Extension, 69189–69206
PROPOSED RULES
Pesticides:
Proposal To Add Chitosan to the List of Active Ingredients Permitted in Exempted Minimum Risk Pesticide Products, 69307–69311
NOTICES
Prospective Purchaser Administrative Settlement Agreement and Covenant Not To Sue:
CERCLA; Lockwood Solvent Ground Water Plume Superfund Site, Billings, MT, 69326–69327

Equal Employment Opportunity Commission
RULES
Procedural Regulations for Issuing Guidance, 69167–69172

Federal Aviation Administration
RULES
Airspace Designations and Reporting Points:
Hartford, KY, 69148–69149
Montezuma, GA, 69147–69148
Airworthiness Directives:
Airbus Helicopters, 69126–69129, 69131–69134
Airbus SAS Airplanes, 69129–69131
Dassault Aviation Airplanes, 69142–69147
Pilatus Aircraft Ltd. Airplanes, 69138–69142
Textron Aviation Inc. Airplanes, 69134–69138
Standard Instrument Approach Procedures, and Takeoff Minimums and Obstacle Departure Procedures; Miscellaneous Amendments, 69149–69153
PROPOSED RULES
Airspace Designations and Reporting Points:
McChord Field (Joint Base Lewis-McChord), WA, 69281–69282
Newburyport, MA, 69279–69280
Airworthiness Directives:
Airbus Helicopters, 69267–69269

ATR—GIE Avions de Transport Regional Airplanes, 69272–69276
Dassault Aviation Airplanes, 69269–69272
De Havilland Aircraft of Canada Limited (Type Certificate Previously Held by Bombardier, Inc.) Airplanes, 69276–69279
Special Conditions:
AgustaWestland Philadelphia Corporation, Leonardo S.p.A. Model A119 and AW119 MKII Helicopters; Pressure Refueling and Fueling Provisions, 69265–69267

Federal Communications Commission
PROPOSED RULES
Television Broadcasting Services:
Mesa, AZ, 69311
NOTICES
Invoice Filing Deadlines for TV Broadcaster Relocation Fund, 69328–69331
Meetings:
Open Commission, 69327–69328

Federal Emergency Management Agency
NOTICES
Adjustment of Countywide Per Capita Impact Indicator, 69341
Adjustment of Minimum Project Worksheet Amount, 69340
Adjustment of Statewide Per Capita Impact Indicator, 69341
Maximum Amount of Assistance Under the Individuals and Households Program, 69340–69341

Federal Motor Carrier Safety Administration
NOTICES
Qualification of Drivers; Exemption Applications:
Hearing, 69380–69381, 69384–69385
Vision, 69378–69384

Federal Reserve System
NOTICES
Change in Bank Control:
Acquisitions of Shares of a Bank or Bank Holding Company, 69331

Federal Trade Commission
NOTICES
Agency Information Collection Activities; Proposals, Submissions, and Approvals, 69331–69333

Fish and Wildlife Service
RULES
National Wildlife Refuge System:
Use of Electric Bicycles, 69223–69235

Foreign Assets Control Office
NOTICES
Blocking or Unblocking of Persons and Properties, 69385–69386

Foreign-Trade Zones Board
NOTICES
Application for Reorganization under Alternative Site Framework;
Foreign-Trade Zone 139, Sierra Vista, AZ; Withdrawal, 69313
Proposed Production Activity:
Zinus USA Inc., Foreign-Trade Zone 26, Atlanta, GA, 69312–69313

Forest Service
PROPOSED RULES
Assessing Fees for Excess and Unauthorized Grazing, 69303–69307

Health and Human Services Department
See Centers for Disease Control and Prevention
See National Institutes of Health
See Substance Abuse and Mental Health Services Administration
NOTICES
Awards Unsolicited Proposal:
American Heart Association, Dallas, TX, 69334–69335

Homeland Security Department
See Coast Guard
See Federal Emergency Management Agency
See Transportation Security Administration
See U.S. Citizenship and Immigration Services
PROPOSED RULES
Modification of Registration Requirement for Petitioners Seeking To File Cap-Subject H–1B Petitions, 69236–69265

Interior Department
See Fish and Wildlife Service
See Land Management Bureau
See National Park Service

International Trade Administration
NOTICES
Antidumping or Countervailing Duty Investigations, Orders, or Reviews:
Finished Carbon Steel Flanges From Spain, 69314–69316
Large Diameter Welded Pipe From the Republic of Turkey, 69313–69314

International Trade Commission
NOTICES
Investigations; Determinations, Modifications, and Rulings, etc.:
Certain Industrial Automation Systems and Components Thereof Including Control Systems, Controllers, Visualization Hardware, Motion and Motor Control Systems, Networking Equipment, Safety Devices, and Power Supplies, 69358–69359
Certain Pocket Lighters, 69357–69358
Cut-to-Length Carbon Steel Plate From China, Russia, and Ukraine, 69362–69364
Melamine From China, 69359–69362
Potassium Phosphate Salts From China, 69352–69354
Tetrahydrofurfuryl Alcohol From China, 69358
Welded Line Pipe From Korea and Turkey, 69354–69357

Justice Department
See Drug Enforcement Administration

Labor Department
See Employment and Training Administration

Land Management Bureau
RULES
Increasing Recreational Opportunities Through the Use of Electric Bikes, 69206–69223
NOTICES
Meetings:
Arizona Resource Advisory Council, 69351

Record of Decision:
Proposed Willow Master Development Plan Project, Alaska, 69351–69352

National Endowment for the Humanities
NOTICES
Meetings:
National Council on the Humanities, 69365–69366

National Foundation on the Arts and the Humanities
See National Endowment for the Humanities

National Highway Traffic Safety Administration
PROPOSED RULES
Federal Motor Vehicle Safety Standards:
Child Restraint Systems, 69388–69459

National Institutes of Health
NOTICES
Agency Information Collection Activities; Proposals, Submissions, and Approvals:
Office of Intramural Training and Education—Application, Registration, and Alumni Systems Office of the Director, 69337–69338
Meetings:
National Institute of Neurological Disorders and Stroke, 69338
Request for Information:
Strategic Plan for COVID–19 Research, 69335–69336

National Oceanic and Atmospheric Administration
NOTICES
Application for Exempted Fishing Permits:
Magnuson-Stevens Act Provisions; General Provisions for Domestic Fisheries, 69316–69318
Draft Revised Management Plan for the Lake Superior National Estuarine Research Reserve, 69320–69321
Meetings:
Mid-Atlantic Fishery Management Council, 69319
New England Fishery Management Council, 69319
North Pacific Fishery Management Council, 69316, 69319–69320

National Park Service
RULES
General Provisions:
Electric Bicycles, 69175–69188

National Technical Information Service
NOTICES
Agency Information Collection Activities; Proposals, Submissions, and Approvals:
Limited Access Death Master File Systems Safeguards Attestation Forms, 69321–69322

Personnel Management Office
NOTICES
Meetings:
Federal Prevailing Rate Advisory Committee, 69366

Postal Regulatory Commission
NOTICES
Periodic Reporting, 69366–69367

Presidential Documents
ADMINISTRATIVE ORDERS
Sudan; Continuation of National Emergency (Notice of October 30, 2020), 69461–69464

Securities and Exchange Commission
NOTICES
Application:
Investment Managers Series Trust II and AXS Investments LLC, 69367–69370
Charter Renewal:
Fixed Income Market Structure Advisory Committee, 69370–69371
Meetings; Sunshine Act, 69370, 69375–69376
Self-Regulatory Organizations; Proposed Rule Changes:
MIAX Emerald, LLC, 69371–69375

Small Business Administration
RULES
Use of Federal Surplus Property for Veteran-Owned Small Businesses and Small Businesses in Disaster Areas and Puerto Rico, 69120–69126
NOTICES
Disaster Declaration:
Texas, 69376
Utah, 69376–69377
Meetings:
Regional Small Business Regulatory Fairness Boards, 69376

State Department
NOTICES
Charter Renewal:
Overseas Security Advisory Council, 69378
Meetings:
Preparation for International Maritime Organization Meeting, 69377
Request for Statements of Interest, 69377–69378

Substance Abuse and Mental Health Services Administration
NOTICES
Certified Laboratories and Instrumented Initial Testing Facilities:
List of Facilities Which Meet Minimum Standards To Engage in Urine and Oral Fluid Drug Testing for Federal Agencies, 69339–69340

Transportation Department
See Federal Aviation Administration
See Federal Motor Carrier Safety Administration
See National Highway Traffic Safety Administration

Transportation Security Administration
NOTICES
Enforcement Actions Summary, 69341–69344

Treasury Department
See Foreign Assets Control Office

U.S. Citizenship and Immigration Services
NOTICES
Extension of the Designation of South Sudan for Temporary Protected Status, 69344–69351

Separate Parts In This Issue

Part II
Transportation Department, National Highway Traffic Safety Administration, 69388–69459

Part III
Presidential Documents, 69461–69464

Reader Aids

Consult the Reader Aids section at the end of this issue for phone numbers, online resources, finding aids, and notice of recently enacted public laws.

To subscribe to the Federal Register Table of Contents electronic mailing list, go to https://public.govdelivery.com/accounts/USGPOOFR/subscriber/new, enter your e-mail address, then follow the instructions to join, leave, or manage your subscription.

CFR PARTS AFFECTED IN THIS ISSUE

A cumulative list of the parts affected this month can be found in the Reader Aids section at the end of this issue.

3 CFR

Administrative Orders:

Notices:

Notice of October 30, 2020 69463

8 CFR

Proposed Rules:

214 69236

12 CFR

1003 69119

13 CFR

124 69120

125 69120

129 69120

14 CFR

39 (8 documents) 69126, 69129, 69131, 69134, 69138, 69140, 69142, 69144

71 (2 documents) 69147, 69148

97 (2 documents) 69149, 69151

Proposed Rules:

27 69265

39 (4 documents) 69267, 69269, 69272, 69276

71 (2 documents) 69279, 69281

21 CFR

1301 69153

1306 69153

Proposed Rules:

1300 69282

1301 69282

29 CFR

1695 69167

33 CFR

165 69172

Proposed Rules:

165 (2 documents) 69299, 69301

36 CFR

1 69175

4 69175

Proposed Rules:

222 69303

40 CFR

9 69189

122 69189

123 69189

127 69189

403 69189

503 69189

Proposed Rules:

152 69307

43 CFR

8340 69206

47 CFR

Proposed Rules:

73 69311

49 CFR

Proposed Rules:

571 69388

50 CFR

27 69223

Rules and Regulations

Federal Register

Vol. 85, No. 212

Monday, November 2, 2020

This section of the FEDERAL REGISTER contains regulatory documents having general applicability and legal effect, most of which are keyed to and codified in the Code of Federal Regulations, which is published under 50 titles pursuant to 44 U.S.C. 1510.

The Code of Federal Regulations is sold by the Superintendent of Documents.

BUREAU OF CONSUMER FINANCIAL PROTECTION

12 CFR Part 1003

[Docket No. CFPB–2019–0021]

RIN 3170–AA76

Home Mortgage Disclosure (Regulation C); Correction of Supplementary Information

AGENCY: Bureau of Consumer Financial Protection.

ACTION: Final rule; correction.

SUMMARY: On April 16, 2020, the Consumer Financial Protection Bureau (Bureau) issued the ''Home Mortgage Disclosure (Regulation C)'' final rule (HMDA Thresholds Final Rule). The Section-by-Section Analysis in the Supplementary Information to the HMDA Thresholds Final Rule contained several clerical errors regarding the estimated cost savings in annual ongoing costs from various possible closed-end coverage thresholds as compared to the then-current coverage threshold of 25 closed-end mortgage loans. This document corrects those errors.

DATES: This correction is effective on November 2, 2020.

FOR FURTHER INFORMATION CONTACT: Jaydee DiGiovanni, Counsel; or Amanda Quester or Alexandra Reimelt, Senior Counsels, Office of Regulations, at 202–435–7700 or *https://reginquiries.consumerfinance.gov.* If you require this document in an alternative electronic format, please contact *CFPB_Accessibility@cfpb.gov.*

SUPPLEMENTARY INFORMATION: On April 16, 2020, the Bureau issued the ''Home Mortgage Disclosure (Regulation C)'' final rule (HMDA Thresholds Final Rule), which adjusts the permanent thresholds for reporting data about closed-end mortgage loans and open-end lines of credit in Regulation C.[1] The Section-by-Section Analysis in part V of the Supplementary Information to the HMDA Thresholds Final Rule contained several clerical errors regarding the estimated cost savings in annual ongoing costs from various possible closed-end coverage thresholds as compared to the then-current coverage threshold of 25 closed-end mortgage loans.[2] This document corrects those errors. Specifically, in the first and second columns on page 28374 and in the third column on page 28383 of volume 85 of the **Federal Register**:

- The phrase ''institutions that originate between 25 and 49 closed-end mortgage loans would save approximately $3.7 million per year in total annual ongoing costs, relative to the current threshold of 25'' should read ''institutions that originate between 25 and 49 closed-end mortgage loans would save approximately $2.0 million per year in total annual ongoing costs, relative to the current threshold of 25'';
- The phrase ''institutions that originate between 25 and 99 closed-end mortgage loans will save approximately $11.2 million per year, relative to the current threshold of 25'' should read ''institutions that originate between 25 and 99 closed-end mortgage loans will save approximately $6.4 million per year, relative to the current threshold of 25''; and
- The phrase ''institutions would save approximately $27.2 million and $45.4 million, respectively, relative to the current threshold of 25'' should read ''institutions would save more, relative to the current threshold of 25.''

The HMDA Thresholds Final Rule includes the Bureau's consideration of the potential benefits, costs, and impacts of the final rule in the Dodd-Frank Act section 1022(b) analysis in part VII of the Supplementary Information.[3] As the Bureau explained in part V of the Supplementary Information, part VII.E of the Supplementary Information provides a more comprehensive discussion of the Bureau's costs estimates than part V.[4] These changes to part V correct the clerical errors on pages 28374 and 28383 to conform the cost estimates provided on those pages to the Bureau's analysis of the costs of the final rule provided in part VII.E of the Supplementary Information, including the estimates provided in table 2 on page 28392 and in the second and third columns on page 28396.

Correction

Accordingly, the Bureau makes the following corrections to FR Doc. 2020–08409 published on May 12, 2020 (85 FR 28364):

1. On page 28374, in the first column, in the 39th to 43rd lines, revise ''institutions that originate between 25 and 49 closed-end mortgage loans would save approximately $3.7 million per year in total annual ongoing costs, relative to the current threshold of 25'' to read ''institutions that originate between 25 and 49 closed-end mortgage loans would save approximately $2.0 million per year in total annual ongoing costs, relative to the current threshold of 25'';
2. On page 28374, in the first column, in the 47th through 50th lines, and in the second column, in the 1st line, revise ''institutions that originate between 25 and 99 closed-end mortgage loans will save approximately $11.2 million per year, relative to the current threshold of 25'' to read ''institutions that originate between 25 and 99 closed-end mortgage loans will save approximately $6.4 million per year, relative to the current threshold of 25'';
3. On page 28374, in the second column, in the 3rd through 6th lines, revise ''institutions would save approximately $27.2 million and $45.4 million, respectively, relative to the current threshold of 25'' to read ''institutions would save more, relative to the current threshold of 25'';
4. On page 28383, in the third column, in the 2nd to 7th lines, revise ''institutions that originate between 25 and 49 closed-end mortgage loans would save approximately $3.7 million per year in total annual ongoing costs relative to the current threshold of 25''

[1] Home Mortgage Disclosure (Regulation C), 85 FR 28364 (May 12, 2020).

[2] Effective July 1, 2020, the coverage threshold for closed-end mortgage loans increased to 100.

[3] Specifically, section 1022(b)(2)(A) of the Dodd-Frank Act calls for the Bureau to consider the potential benefits and costs of a regulation to consumers and covered persons, including the potential reduction of access by consumers to consumer financial products or services; the impact on depository institutions and credit unions with $10 billion or less in total assets as described in section 1026 of the Dodd-Frank Act; and the impact on consumers in rural areas.

[4] *E.g.,* 85 FR at 28371, 28374 n.68, 28381, 28383 n.137, 28384 n.141.

to read ''institutions that originate between 25 and 49 closed-end mortgage loans would save approximately $2.0 million per year in total annual ongoing costs, relative to the current threshold of 25'';

5. On page 28383, in the third column, in the 10th through 14th lines, revise ''institutions that originate between 25 and 99 closed-end mortgage loans will save approximately $11.2 million per year, relative to the current threshold of 25'' to read ''institutions that originate between 25 and 99 closed-end mortgage loans will save approximately $6.4 million per year, relative to the current threshold of 25''; and

6. On page 28383, in the third column, in the 17th through 20th lines, revise ''institutions would save approximately $27.2 million and $45.4 million, respectively, relative to the current threshold of 25'' to read ''institutions would save more, relative to the current threshold of 25.''

The Director of the Bureau, having reviewed and approved this document is delegating the authority to electronically sign this document to Laura Galban, a Bureau Federal Register Liaison, for purposes of publication in the **Federal Register**.

Dated: October 9, 2020.

Laura Galban,

Federal Register Liaison, Bureau of Consumer Financial Protection.

[FR Doc. 2020–22891 Filed 10–30–20; 8:45 am]

BILLING CODE 4810–AM–P

SMALL BUSINESS ADMINISTRATION

13 CFR Parts 124, 125, and 129

RIN 3245–AH18

Use of Federal Surplus Property for Veteran-Owned Small Businesses and Small Businesses in Disaster Areas and Puerto Rico

AGENCY: U.S. Small Business Administration.

ACTION: Final rule.

SUMMARY: The U.S. Small Business Administration (SBA) is amending its regulations to expand access to the U.S. General Services Administration's (GSA) Federal Surplus Personal Property Donation Program for certain small business concerns in accordance with the Recovery Improvements for Small Entities After Disaster Act of 2015 (RISE Act), the Veterans Small Business Enhancement Act, and the John S. McCain National Defense Authorization Act for Fiscal Year 2019 (NDAA). These Acts provide that small businesses in disaster areas, veteran-owned small businesses, and small business concerns located in Puerto Rico, respectively, should be considered for surplus personal property distributions. SBA, in coordination with GSA, is enacting certain procedures for determining which firms may participate in GSA's existing surplus personal property program, and under what conditions.

DATES: This rule is effective December 2, 2020.

FOR FURTHER INFORMATION CONTACT: Donna Fudge, Office of Policy, Planning and Liaison, 409 Third Street SW, Washington, DC 20416.

SUPPLEMENTARY INFORMATION:

General Background

On January 21, 2020, SBA issued a proposed rule to implement three new statutory programs regarding the transfer of surplus personal property to certain small businesses. 85 FR 3273. As noted in SBA's proposed rule, GSA operates the Federal Surplus Personal Property Donation Program (Donation Program) under the Federal Property and Administrative Services Act of 1949, 63 Stat. 377, as amended, and other applicable laws. *See* 41 CFR part 102–37. Currently, eligible state and local government agencies and nonprofit organizations can obtain personal property that the Federal Government no longer needs through the Donation Program. More information is available on the GSA website at *https://www.gsa.gov/buying-selling/government-property-for-sale-or-disposal/personal-property-for-reuse-sale/for-state-agencies-and-public-organizations/.*

SBA received 32 comments. Of those 32 comments, 30 were supportive. SBA received several unsupportive comments that requested SBA not adopt clear statutory requirements. SBA has noted these comments and has provided a more thorough response to each of those comments below.

The Veterans Small Business Enhancement Act

The Veterans Small Business Enhancement Act, Public Law 115–416 (January 2, 2019), codified in the Small Business Act at 15 U.S.C 657b(g), provides that veteran-owned small businesses should have access to surplus government personal property. SBA is adding a new subpart F, containing § 125.100, to 13 CFR part 125 to implement these changes.

SBA is adding this subpart to detail the new statutory authority. As noted in SBA's proposed rule, GSA and the State Agencies for Surplus Property (SASPs) already maintain a compliance and oversight role with regard the distribution of surplus personal property. As such, veteran-owned small business concerns that receive surplus personal property will generally follow the same guidelines and procedures as other recipients through GSA's Donation Program.

The language added in § 125.100(a) references the regulations that govern the GSA Donation Program, and the requirements that concerns will need to meet to use the Donation Program. There were no comments on this paragraph and language is being adopted as proposed.

SBA received three comments on the proposed language for § 125.100(b)(1). For this section, SBA proposed language to incorporate the requirement that a concern will need to be verified by the Department of Veterans Affairs (VA) as a small business owned and controlled by veterans in order to be eligible for the Donation Program. One commenter agreed with SBA's proposed regulation. Two commenters requested that SBA remove the requirement regarding verification by the VA. The commenters requested that SBA drop this requirement because they believed it creates an obstacle to participation that could limit the number of small businesses that use the Donation Program. As noted in the proposed rule, the requirement that participants be verified by the VA comes directly from the Small Business Act and is a statutory requirement. The statutory language states that access to the Donation Program is available only to ''to small business concerns owned and controlled by veterans (as verified by the Secretary of Veterans Affairs under section 8127 of title 38, United States Code)''. 15 U.S.C. 657b(g)(2). SBA does not have the authority to disregard clear statutory language when promulgating regulations and program requirements, and therefore, SBA will not be removing this requirement.

SBA is adding § 125.100(c) to provide the requirements for the use of surplus personal property received, and the repercussions for misusing the surplus personal property. The proposed language references GSA and SASP guidelines for use of surplus personal property because, as mentioned above, veteran-owned small businesses will be treated similarly to other recipients with regard to the use, maintenance, and retention of surplus personal property. SBA received one comment on the proposed language. This comment requested that the final rule provide more specificity and detail regarding

appropriate use of received property. SBA has reviewed the language of the proposed regulation. The proposed language made clear that the property needed to be used for normal business purposes of the business acquiring the property. The rule as proposed did not allow for the personal use of the property or the transfer of the property to other businesses. In addition, the proposed language is similar to language currently used for SBA's 8(a) Business Development (BD) program. 13 C.F.R § 124.405(c). As such, SBA is not making any changes and is adopting the language as proposed.

This commenter also raised concerns about the proposed language concerning the return of surplus property. SBA has consulted with GSA about this comment and believes that the proposed language is consistent with Federal Management Regulations on the issue. As such, SBA does not believe that the proposed language puts potential recipients or SASPs in a position substantially different than other potential donees. Given these factors, SBA has decided to adopt the language as proposed.

SBA is adding § 125.100(d) to provide notice that there are costs associated with receiving the surplus personal property. These costs will be calculated by the individual SASP pursuant to 41 CFR part 102–37, Appendix B(e), and the SASP's State Plan of Operation. Veteran-owned small business concerns will be treated similarly to other recipients. SBA did not receive any comments on this provision and adopts it as proposed.

SBA proposed to add § 125.100(e) to provide notice of the type of title that veteran-owned small business concerns will receive. Firms will be receiving conditional title, and full title will transfer when they have met all the requirements of GSA and the SASP. As noted earlier, this procedure will have veteran-owned small business concerns treated in a similar manner to other recipients of surplus personal property through GSA's Donation Program. SBA received one comment on this specific issue. The commenter asked whether veteran-owned companies would have the same retention requirements as other donees. As noted in the proposed rule, SBA intends that veteran-owned businesses be treated in the same manner as other donees. SBA believes the current language will result in veteran-owned businesses having similar retention requirements to other donees, and addresses the commenter's concern about veteran-owned businesses potentially being treated differently. SBA is adopting the language as proposed.

RISE After Disaster Act

Section 2105 of the RISE After Disaster Act authorizes SBA to transfer technology or surplus personal property to small business concerns located in disaster areas. In order to implement the changes made by section 2105, SBA is amending § 124.405 and part 129 of its regulations.

Amendments to Part 124.405

SBA is amending § 124.405 to update the statutory reference contained in paragraph (a)(1). There were no comments and SBA is adopting the proposed language as is.

SBA is also adding a new paragraph (b)(6) to provide that 8(a) BD program Participants are not eligible to receive surplus personal property under § 124.405 if they have received surplus personal property under subpart A to part 129 as a small business concern located in a disaster area during the 2-year period beginning on the date on which the President declared the applicable major disaster. SBA did not receive any comments on this change and adopts the rule as proposed.

In addition to the changes necessitated by section 2105, SBA is making several other changes to § 124.405. SBA is changing the cross citation for the GSA and SASP procedures in § 124.405(a)(1). SBA is also changing the language in paragraph (a)(2) of this section to remove the term ''donable'' and in its place provide more descriptive language, because ''donable'' is not a defined term in GSA's surplus personal property regulations. SBA did not receive any comments on these changes and adopts the rule as proposed.

SBA is amending § 124.405(b)(3) to add a reference to the nonprocurement debarment regulations contained in title 2 of the Code of Federal Regulations. SBA did not receive any comments on this change and adopts the rule as proposed.

SBA is amending § 124.405(c)(1) to provide clarity on how the program has been historically administered. The new language more clearly articulates the current policy and SBA believes it will lead to less confusion now that there are additional programs. SBA did not receive any comments on this change and adopts the rule as proposed.

SBA is amending § 124.405(d)(1) to update the cross references to GSA's regulations. SBA did not receive any comments on this change and adopts the rule as proposed.

SBA is amending § 124.405(f) to alter the method for transferring title. As noted in the proposed rule, this change will align the 8(a) BD program participant title terms with the other programs SBA is implementing, and with the general practice of GSA and the SASP, with regard to other donees. SBA did not receive any comments on this change and adopts the rule as proposed.

Amendments to Part 129

Via the final rule, ''National Defense Authorization Acts of 2016 and 2017, Recovery Improvements for Small Entities After Disaster Act of 2015, and Other Small Business Government Contracting'', SBA added part 129, Contracts For Small Businesses Located In Disaster Areas, to its regulations. 84 FR 65647 (November 29, 2019). To implement section 2105 of the RISE After Disaster Act, SBA is now creating two subparts for part 129: Subpart A, titled, ''Contracts For Small Businesses Located In Disaster Areas'', and subpart B, titled, ''Surplus Personal Property for Small Businesses Located in Disaster Areas''. The new subpart A will contain the existing regulations in part 129. The new subpart B will address how a small business concern located in a disaster area can obtain surplus personal property and will contain two sections, §§ 129.200 and 129.201. There were no comments regarding moving the noted regulations to the new subpart B. SBA is adding § 129.200, containing a definition for ''covered period''. This term is being incorporated into SBA regulations as defined in the Small Business Act at 15 U.S.C. 636(j)(f)(13)(F)(ii)(I)(aa). SBA did not receive any comments on this change and adopts the regulation as proposed.

SBA is adding § 129.201 to implement the program for transfer of surplus personal property. SBA received one comment regarding the certification/verification of small firms. This commenter noted that 8(a) firms and veteran-owned firms are certified by Government agencies and there is a method for verifying firms. The question raised was how a SASP should verify that a firm is small. In response to this comment, SBA is adding a requirement in § 129.201(b)(2) that any firm seeking to receive property though this program is required to register in SAM.gov, or a successor system, and officially certify its status as a small business under the size standard corresponding to its primary NAICS code. In addition, SASPs and GSA may rely on these certifications. SBA also added similar language to § 129.301(b) for consistency.

SBA received two comments on § 129.201(c), which requires that firms should only receive property in states the business are located. One commenter did not think limiting

available surplus property to only businesses located in the state of the emergency was reasonable and did not account for businesses that may want to move into the area after a disaster. The other commenter agreed with the rule as written and thought it would be difficult for SASP to oversee and monitor property transferred out of their state. SBA believes the intent of the statute was to assist businesses located in a disaster area. Also, SBA believes that the suggested change by the commenter, while not being in line with the intent of the statute, would also lead to more burdens on small businesses and SASPs that would need to keep track and report on equipment moving out of the state. As such, SBA adopts the rule as proposed.

John S. McCain National Defense Authorization Act for Fiscal Year 2019 (NDAA)

Section 861 of the John S. McCain National Defense Authorization Act for Fiscal Year 2019 (NDAA), provides that SBA may transfer technology or surplus personal property to a small business concern located in Puerto Rico if the small business meets the requirements for such a transfer, without regard to whether that small business is a participant in the 8(a) BD program. 15 U.S.C. 636(j)(13)(F)(iii); Public Law 115–232 (August 13, 2018). SBA is adding a new subpart C, titled, ''Surplus Personal Property for Small Businesses Located in Puerto Rico'', to part 129 to incorporate these changes. The new subpart will include two sections, §§ 129.300 and 301.

SBA is adding two new definitions via the new § 129.300. Specifically, SBA will incorporate the term ''covered period'' as defined at 15 U.S.C. 636(j)(13)(F)(iii)(I). SBA noted in the proposed rule, and is reiterating here, that this definition for ''covered period'' is different than the definition used in the new § 129.200. The two terms are defined separately in the Small Business Act, and therefore SBA is adopting the language from the Act, as is, for each program. SBA did not receive any comments on this definition and adopts the regulation as proposed. The new § 129.300 also provides a definition for the term, ''located in Puerto Rico''. SBA did not receive any comments on this definition and adopts the regulation as proposed.

SBA is adding § 129.301 to implement the program for transfer of surplus personal property for small business concerns located in Puerto Rico. SBA did not receive any comments on this section. However, SBA also made changes to § 129.301(b) requiring firms to register in *SAM.gov*, and allowing for SASPs and GSA to rely on those certifications. SBA made the change in response to a comment on another section referenced above. SBA is adopting the rest of the section without any additional changes.

Compliance With Executive Orders 12866, 13563, 12988, 13132, 13771, the Paperwork Reduction Act (44 U.S.C. Ch. 35), and the Regulatory Flexibility Act (5 U.S.C. 601–612)

Executive Order 12866

The Office of Management and Budget (OMB) has determined that this rule is not a ''significant'' regulatory action for purposes of Executive Order 12866. This is not a major rule under the Congressional Review Act, 5 U.S.C. 801, *et seq.*

Executive Order 13563

This executive order directs agencies to, among other things: (a) Afford the public a meaningful opportunity to comment through the internet on proposed regulations, with a comment period that should generally consist of not less than 60 days; (b) provide for an ''open exchange'' of information among government officials, experts, stakeholders, and the public; and (c) seek the views of those who are likely to be affected by the rulemaking, even before issuing a notice of proposed rulemaking. As far as practicable or relevant, SBA considered these requirements in developing this rule.

First, to the extent possible, SBA utilized the most recent data available in the Federal Procurement Data System—Next Generation, System for Award Management and Electronic Subcontracting Reporting System.

Second, the proposed rule provided a 60-day comment period and was posted on *www.regulations.gov* (Docket ID: SBA–2020–0002) to allow the public to comment meaningfully on its provisions. In addition, the rule was discussed with GSA, the VA and with representatives of the National Association of State Agencies for Surplus Property.

Third, the final rule implements statutory provisions and provides clarification requested by agencies and stakeholders. In addition, the amendments made via this rule will allow potential small business participants to participate in the GSA Program in as similar a manner as other participants do without additional regulatory requirements.

Executive Order 12988

This action meets applicable standards set forth in section 3(a) and 3(b)(2) of Executive Order 12988, Civil Justice Reform, to minimize litigation, eliminate ambiguity, and reduce burden. This action does not have any retroactive or preemptive effect.

Executive Order 13132

A rule has implications for federalism under Executive Order 13132 (Federalism), if it has a substantial direct effect on the States, on the relationship between the national government and the States, or on the distribution of power and responsibilities among the various levels of government. This rule would implement new policies allowing more small businesses to participate in the GSA Program administered by the SASPs. SBA has determined that this rule is consistent with the fundamental federalism principles and preemption requirements described in Executive Order 13132. We note that this rule would impose a reporting requirement specific to state agencies that participate in the Program to provide Federal technology or surplus personal property to small business concerns located in disaster areas and in Puerto Rico, as well as those designated as veteran-owned small businesses. However, given the potential for application and annual reporting burdens on the States and Territories, particularly Puerto Rico, SBA solicited comments on the issue of whether this rule has implications for federalism. SBA did receive a comment from a State Agency for Surplus Property and one from the National Association of State Agencies for Surplus Property. Both comments raised issues with details of the language of the regulations, but neither comment raised the issue of federalism.

Executive Order 13771

This final rule is not expected to be subject to Executive Order 13771 because the rule is a transfer rule. The benefits to small businesses in disaster areas, veteran-owned small businesses, and small business concerns located in Puerto Rico produced by this rule are a transfer of benefits from other entities who may have received the surplus personal property in their place.

Paperwork Reduction Act, 44 U.S.C. Ch. 35

For the purposes of the Paperwork Reduction Act, SBA has determined that this rule will not impose new Government-wide reporting requirements on small business concerns. SBA and GSA have discussed the possible implication of the new regulations, and do not believe that any new requirements are being added to

GSA's Surplus Property Donation Program in addition to the requirements already in place for recipients of surplus personal property. GSA has specific forms for its Surplus Property Donation Program, but these proposed amendments will require no changes to those forms. *See* Standard Form 123, Transfer Order—Surplus Personal Property and Continuation Sheet, OMB Control Number 3090–0014 (expires March 31, 2022).

However, this rule does have a reporting requirement specific to state agencies that participate in the Program to provide Federal technology or surplus personal property to small business concerns located in disaster areas, designated as veteran-owned small businesses, or located in Puerto Rico. GSA already has a specific form to collect data from SASPs with regard to the Surplus Property Donation Program. *See* GSA Form 3040, State Agency Monthly Donation Report of Surplus Personal Property, OMB Control Number 3090–0112 (expires March 31, 2022).

Concerning the verification of veteran-owned small businesses, the VA already has the authority to verify qualified small business concerns. 38 CFR part 74. The VA is responsible for updating its public database of veteran-owned small businesses *https://www.va.gov/osdbu/verification/.* SASPs will rely on the accurately updated information to make decisions. Concerning the designation of a ''disaster area,'' the term is defined in the RISE Act as area for which the President has declared a major disaster during the covered period; namely, the 2-year period beginning on the date of the declaration of the applicable major disaster.

SBA invited public comments on the proposed changes to the regulations requiring reporting from SASPs to the Federal Government. SBA received general comments from SASPs regarding the regulations and possible burdens related to oversight, but not specifically about the collection of data.

Regulatory Flexibility Act, 5 U.S.C. 601–612

According to the Regulatory Flexibility Act (RFA), 5 U.S.C. 601, when an agency issues a rulemaking, it must prepare a regulatory flexibility analysis to address the impact of the rule on small entities. However, Section 605 of the RFA allows an agency to certify a rule, in lieu of preparing an analysis, if the rulemaking is not expected to have a significant economic impact on a substantial number of small entities. Although the rulemaking will impact all veteran-owned small businesses and small business concerns in disaster areas and Puerto Rico, SBA does not believe the impact will be significant. After discussions with GSA, SBA believes that the rule will have an impact on a substantial number of entities, but that it will not have a significant economic impact. SBA reached this conclusion because the overall amount of donated personal property will not change. The rule will be implementing statutory changes with regard to the mix of how that property is distributed among the various eligible entities, but neither GSA or SBA believe that the overall impact on all relevant parties will be significant given that the regulation is not changing the total value of personal property distributed. SBA did not receive any comments on its analysis that there would not be significant economic impact.

The Federal Surplus Personal Property Donation Program enables certain nonfederal organizations to obtain personal property that the Federal Government no longer needs. SASPs maintain the list of eligible organizations and these generally include: Public agencies, nonprofit educational and public health agencies, nonprofit and public programs for the elderly, public airports, and educational agencies of special interest to the Armed Services. More information on the list of eligible entities can be found at *http://www.nasasp.org/findmystate.html.* In fiscal year 2018, GSA donated through this program personal property with original acquisition value of $418,158,102. It should be noted that this reflects the value of the property when it was acquired, not when it was donated. SBA does not have accurate data to reflect the value at time of donation but does believe the value would be significantly less than the value at which the property was acquired.

As noted above this final rule will have an effect on a substantial number of entities. First, it will have an impact on all the entities currently entitled to receive surplus property. SBA does not have a number for all those entities, but that number does include approximately 4,400 participants in SBA's 8(a) BD program. In addition to the entities already eligible for GSA's Program, these regulations will also have an impact on new entities that will be allowed to take part once these regulations go into effect. As of December 9, 2019, the VA has a total of 13,853 verified service-disabled veteran-owned small businesses and veteran-owned small businesses. Those businesses would be eligible to participate in GSA's Program under the regulations. Further, as of November 2019, SBA used data from the Federal Procurement Data System to identify approximately 3,400 small firms in Puerto Rico that are currently engaged in business with the Federal Government. Finally, according to the 2012 Economic Census there are approximately 7.7 million small businesses in the United States with employees. Under the regulations any small business located in a major disaster area may be eligible for the Donation Program. Under these regulations it is possible that any small business in the United States could potentially be a participant, because a major disaster could happen anywhere and at any time. This is a variable that cannot be known with certainty at this time. Therefore, SBA is operating under the assumption that all small businesses could be affected at some point in the future.

The provisions of this regulation are implementing three distinct and new statutory provisions enacted by Congress and detailed above. Therefore, it is necessary for SBA to take some action in order to implement the new statutory requirements. SBA in conjunction with GSA has reviewed possible alternatives to this proposed regulation. One alternative discussed was for SBA and GSA to enter into one or several memorandums of understanding with regard to additional potential program participants. As noted above, participants in SBA's 8(a) BD program are currently able to participate in GSA's Program. Participation in the GSA Program by 8(a) BD participants is governed by both regulations issued by SBA and memorandums of understanding entered into by SBA, GSA, and the various SASPs. In implementing the new statutory provisions SBA believes that following the previous example of the 8(a) BD program is the best course of action and has therefore chosen to implement the statutes by regulation. Going through the formal regulation process allows SBA to craft the rules for the programs with direct input from the public, and to have a place within SBA's regulations that interested parties may go to review the requirements of the various programs. While SBA believes that the formal rule making process is the best alternative for implementation, SBA requested comments on the issue. SBA did not receive any comments on this issue.

SBA is also aware that the statutes implementing these programs and other programs for distribution of surplus personal property do not use the same

language. SBA does not think that this regulation, or the various statutes conflict with each other. SBA believes that these regulations will help provide clarity around any issues or differences between the various statutes. That said, SBA requested comments from any impacted parties about whether the regulations as written conflict with other statutes or regulations. SBA did not receive any comments on this issue.

There are no new compliance or other costs imposed by the rule on small business concerns. The rule expands the access to GSA's Program to more small business concerns under varying circumstances, without significant costs. The benefits to small businesses in disaster areas, veteran-owned small businesses, and small business concerns located in Puerto Rico produced by this rule are a transfer of benefits from other entities who may have received the surplus personal property in their place. The firms must adhere to certain regulations regarding certification or status relevant to designation as a small business concern.

For the reasons discussed, SBA certifies that this rule would not have a significant economic impact on a substantial number of small business concerns.

List of Subjects

13 CFR Part 124

Administrative practice and procedure, Government procurement, Government property, Hawaiian Natives, Indians-business and finance, Minority businesses, Reporting and recordkeeping requirements, Small businesses, Technical assistance.

13 CFR Part 125

Government contracts, Government procurement, Reporting and recordkeeping requirements, Small businesses, Technical assistance, Veterans.

13 CFR Part 129

Administrative practice and procedure, Government contracts, Government procurement, Government property, Reporting and recordkeeping requirements, Small businesses.

Accordingly, for the reasons stated in the preamble, SBA amends 13 CFR parts 124, 125, and 129 as follows:

PART 124—8(a) BUSINESS DEVELOPMENT/SMALL DISADVANTAGED BUSINESS STATUS DETERMINATIONS

■ 1. The authority citation for part 124 continues to read as follows:

Authority: 15 U.S.C. 634(b)(6), 636(j), 637(a), 637(d), 644 and Pub. L. 99–661, Pub. L. 100–656, sec. 1207, Pub. L. 101–37, Pub. L. 101–574, section 8021, Pub. L. 108–87, and 42 U.S.C. 9815.

■ 2. Amend § 124.405 by:

■ a. Revising the second sentence of paragraph (a)(1);

■ b. Revising paragraphs (a)(2) and (b)(3);

■ c. Adding paragraph (b)(6);

■ d. Revising the paragraph (c) subject heading and paragraph (c)(1) introductory text;

■ e. Revising the paragraph (d) subject heading and paragraph (d)(1); and

■ f. Revising paragraph (f).

The revisions and addition read as follows:

§ 124.405 How does a Participant obtain Federal Government surplus property?

(a) * * *

(1) * * * The procedures set forth in 41 CFR part 102–37 and this section will be used to transfer surplus personal property to eligible Participants.

(2) The surplus personal property which may be transferred to SASPs for further transfer to eligible Participants includes all personal property which has become available for donation pursuant to 41 CFR 102–37.30.

(b) * * *

(3) Not be debarred, suspended, or declared ineligible under Title 2 or Title 48 of the Code of Federal Regulations;

* * * * *

(6) Not have received property under part 129, Subpart B of this chapter, during the applicable period described in that section.

(c) *Use of acquired surplus personal property.* (1) Eligible Participants may acquire Federal surplus personal property from the SASP in the State(s) where the Participant is located and operates, provided the Participant represents in writing:

* * * * *

(d) *Procedures for acquiring Federal Government surplus personal property.* (1) Participants may participate in the GSA Federal Surplus Personal Property Donation Program administered by the SASPs. *See* generally 41 CFR part 102–37 and/or § 102–37.125 of that title.

* * * * *

(f) *Title.* Upon execution of the SASP distribution document, the Participant has conditional title only to the surplus personal property during the applicable period of restriction. Full title to the surplus personal property will vest in the donee only after the donee has met all of the requirements of this part.

* * * * *

PART 125—GOVERNMENT CONTRACTING PROGRAMS

■ 3. The authority citation for part 125 is revised to read as follows:

Authority: 15 U.S.C. 632(p), (q), 634(b)(6), 637, 644, 657b, 657(f), and 657r.

■ 4. Add subpart F, consisting of § 125.100, to read as follows:

Subpart F—Surplus Personal Property for Veteran-Owned Small Business Programs

§ 125.100 How does a small business concern owned and controlled by veterans obtain Federal surplus personal property?

(a) *General.* (1) Pursuant to 15 U.S.C. 657b(g), eligible small business concerns owned and controlled by veterans may receive surplus Federal Government property from State Agencies for Surplus Property (SASPs). The procedures set forth in 41 CFR part 102–37 and this section will be used to transfer surplus personal property to such concerns.

(2) The surplus personal property which may be transferred to SASPs for further transfer to eligible small business concerns owned and controlled by veterans includes all surplus personal property which has become available for donation pursuant to 41 CFR 102–37.30.

(b) *Eligibility to receive Federal surplus personal property.* To be eligible to receive Federal surplus personal property, on the date of transfer a concern must:

(1) Be a small business concern owned and controlled by veterans, that has been verified by the Secretary of Veterans Affairs under section 8127 of title 38, United States Code;

(2) Not be debarred, suspended, or declared ineligible under title 2 or title 48 of the Code of Federal Regulations; and

(3) Be engaged or expect to be engaged in business activities making the item useful to it.

(c) *Use of acquired surplus personal property.* (1) Eligible concerns may acquire Federal surplus personal property from the SASP in the State(s) where the concern is located and operates, provided the concern represents and agrees in writing:

(i) As to what the intended use of the surplus personal property is to be;

(ii) That it will use the surplus personal property to be acquired in the normal conduct of its business activities or be liable for the fair rental value from the date of its receipt;

(iii) That it will not sell or transfer the surplus personal property to be acquired to any party other than the Federal

Government as required by GSA and SASP requirements and guidelines;

(iv) That, at its own expense, it will return the surplus personal property to a SASP if directed to do so by SBA, including where the concern has not used the property as intended within one year of receipt;

(v) That, should it breach its agreement not to sell or transfer the surplus personal property, it will be liable to the Federal Government for the established fair market value or the sale price, whichever is greater, of the property sold or transferred; and

(vi) That it will give GSA and the SASP access to inspect the surplus personal property and all records pertaining to it.

(2) A concern receiving surplus personal property pursuant to this section assumes all liability associated with or stemming from the use of the property, and all costs associated with the use and maintenance of the property.

(d) *Costs.* Concerns acquiring surplus personal property from a SASP may be required to pay a service fee to the SASP in accordance with 41 CFR 102–37.280. In no instance will any SASP charge a concern more for any service than their established fees charged to other transferees.

(e) *Title.* Upon execution of the SASP distribution document, the firm receiving the property has only conditional title to the property during the applicable period of restriction. Full title to the property will vest in the donee only after the donee has met all of the requirements of this part and the requirements of GSA and the SASP that it received the property from.

PART 129—CONTRACTS FOR SMALL BUSINESSES LOCATED IN DISASTER AREAS, AND SURPLUS PERSONAL PROPERTY FOR SMALL BUSINESSES LOCATED IN DISASTER AREAS AND PUERTO RICO

■ 5. The authority citation for part 129 is revised to read as follows:

Authority: 15 U.S.C. 636(j)(13)(F)(ii), (iii), 644(f).

■ 6. The heading for part 129 is revised to read as set forth above.

§§ 129.200, 129.300, 129.400, and 129.500 [Resdesignated as §§ 129.101, 129.102, 129.103, and 129.104]

■ 7. Redesignate §§ 129.200, 129.300, 129.400, and 129.500, as 129.101, 129.102, 129.103, and 129.104, respectively.

Subpart A—Contracts for Small Businesses Located in Disaster Areas

■ 8. Designate § 129.100 and newly redesignated §§ 129.101, 129.102, 129.103, and 129.104 as subpart A under the heading set forth above.

■ 9. Add subparts B and C to read as follows:

Subpart B—Surplus Personal Property For Small Businesses Located in Disaster Areas

Sec.

129.200 What definitions are important in this subpart?
129.201 How does a small business concern located in a disaster area obtain Federal surplus personal property?

Subpart C—Surplus Personal Property for Small Businesses Located in Puerto Rico

129.300 What definitions are important in this subpart?
129.301 How does a small business concern located in Puerto Rico obtain Federal surplus personal property?

Subpart B—Surplus Personal Property for Small Businesses Located in Disaster Areas

§ 129.200 What definitions are important in this subpart?

Covered period means the 2-year period beginning on the date on which the President declared the applicable major disaster. 15 U.S.C. 636(j)(f)(13)(F)(ii)(I)(aa).

§ 129.201 How does a small business concern located in a disaster area obtain Federal surplus personal property?

(a) *General.* Pursuant to 15 U.S.C. 636(j)(13)(F)(ii) eligible small business concerns located in disaster areas may receive surplus Federal Government property from State Agencies for Surplus Property (SASPs). The procedures set forth in 41 CFR part 102–37 and this section will be used to transfer surplus personal property to eligible small business concerns.

(1) The property which may be transferred to SASPs for further transfer to eligible small business concerns includes all personal property which has become available for donation pursuant to 41 CFR 102–37.30.

(b) *Eligibility to receive Federal surplus personal property.* To be eligible to receive Federal surplus personal property, on the date of transfer a concern must:

(1) Be located in a disaster area;

(2) Qualify as small under the size standard corresponding to its primary NAICS code and certify its size in SAM.gov, or a successor system, prior to seeking access to surplus property. SASPs and GSA may rely on a concern's certification as small for purposes of this program;

(3) Not be debarred, suspended, or declared ineligible under Title 2 or Title 48 of the Code of Federal Regulations;

(4) Be engaged or expect to be engaged in business activities making the item useful to it; and

(5) Not have received a transfer of property under § 124.405 of this chapter during the covered period. The 2-year period of the presidentially declared disaster does not affect eligibility for additional technology transfers or surplus personal property to a small business concern located in a disaster area for a subsequent presidentially declared disaster occurring within the original 2-year period of a prior presidentially declared disaster.

(c) *Use of acquired surplus personal property.* (1) Eligible concerns may acquire surplus Federal personal property from the SASP in the State(s) where the concern is located and operates, provided the concern represents and agrees in writing:

(i) As to what the intended use of the surplus personal property is to be;

(ii) That it will use the property to be acquired in the normal conduct of its business activities or be liable for the fair rental value from the date of its receipt;

(iii) That it will not sell or transfer the property to be acquired to any party other than the Federal Government as required by GSA and SASP requirements and guidelines;

(iv) That, at its own expense, it will return the property to a SASP if directed to do so by SBA, including where the concern has not used the property as intended within one year of receipt;

(v) That, should it breach its agreement not to sell or transfer the property, it will be liable to the Federal Government for the established fair market value or the sale price, whichever is greater, of the property sold or transferred; and

(vi) That it will give GSA and the SASP access to inspect the property and all records pertaining to it.

(2) A concern receiving surplus personal property pursuant to this section assumes all liability associated with or stemming from the use of the property.

(d) *Costs.* Concerns acquiring surplus personal property from a SASP must pay a service fee to the SASP in accordance with 41 CFR 102–37.280. In no instance will any SASP charge a concern more for any service than their established fees charged to other transferees.

(e) *Title.* Upon execution of the SASP distribution document, the firm

receiving the surplus personal property has only conditional title only to the surplus personal property during the applicable period of restriction. Full title to the property will vest in the donee only after the donee has met all of the requirements of this part and the requirements of GSA and the SASP that it received the property from.

Subpart C—Surplus Personal Property for Small Businesses Located in Puerto Rico

§ 129.300 What definitions are important in this subpart?

Covered period means the period beginning on August 13, 2018 and ending on the date which the Oversight Board established under section 101 of the Puerto Rico Oversight, Management, and Economic Stability Act (48 U.S.C. 2121) terminates. 15 U.S.C. 636(j)(13)(F)(iii).

Located in Puerto Rico means a concern with a physical location in Puerto Rico and organized under the laws of Puerto Rico.

§ 129.301 How does a small business concern located in a Puerto Rico obtain Federal surplus personal property?

(a) *General.* Pursuant to 15 U.S.C. 636(j)(13)(F)(iii), eligible small business concerns located in Puerto Rico may receive surplus Federal Government property from the Puerto Rico State Agency for Surplus Property (SASP). The procedures set forth in 41 CFR part 102–37 and this section will be used to transfer surplus personal property to eligible small business concerns. The property which may be transferred to the Puerto Rico SASP for further transfer to eligible small business concerns includes all personal property which has become available for donation pursuant to 41 CFR 102–37.30.

(b) *Eligibility to receive Federal surplus personal property.* To be eligible to receive Federal surplus personal property, on the date of transfer a concern must:

(1) Be located in Puerto Rico;

(2) Qualify as small under the size standard corresponding to its primary NAICS code and certify its size in SAM.gov, or a successor system, prior to seeking access to surplus property. SASPs and GSA may rely on concern's certification as small for purposes of this program;

(3) Not be debarred, suspended, or declared ineligible under Title 2 or Title 48 of the Code of Federal Regulations; and

(4) Be engaged or expect to be engaged in business activities making the item useful to it.

(c) *Use of acquired surplus personal property.* (1) Eligible concerns may acquire surplus Federal personal property from the Puerto Rico SASP, provided the concern represents and agrees in writing:

(i) As to what the intended use of the surplus personal property is to be;

(ii) That it will use the property to be acquired in the normal conduct of its business activities or be liable for the fair rental value from the date of its receipt;

(iii) That it will not sell or transfer the property to be acquired to any party other than the Federal Government as required by GSA and SASP requirements and guidelines;

(iv) That, at its own expense, it will return the property to the SASP if directed to do so by SBA, including where the concern has not used the property as intended within one year of receipt;

(v) That, should it breach its agreement not to sell or transfer the property, it will be liable to the Federal Government for the established fair market value or the sale price, whichever is greater, of the property sold or transferred; and

(vi) That it will give GSA and SASPs access to inspect the property and all records pertaining to it.

(2) A concern receiving surplus personal property pursuant to this section assumes all liability associated with or stemming from the use of the property.

(d) *Costs.* Concerns acquiring surplus personal property from a SASP must pay a service fee to the SASP in accordance with 41 CFR 102–37.280. In no instance will any SASP charge a concern more for any service than their established fees charged to other transferees.

(f) *Title.* Upon execution of the SASP distribution document, the firm receiving the surplus personal property has only conditional title to the surplus personal property during the applicable period of restriction. Full title to the surplus personal property will vest in the donee only after the donee has met all of the requirements of this part.

Jovita Carranza,

Administrator.

[FR Doc. 2020–22539 Filed 10–30–20; 8:45 am]

BILLING CODE 8026–03–P

DEPARTMENT OF TRANSPORTATION

Federal Aviation Administration

14 CFR Part 39

[Docket No. FAA–2020–0585; Product Identifier 2019–SW–112–AD; Amendment 39–21297; AD 2020–22–01]

RIN 2120–AA64

Airworthiness Directives; Airbus Helicopters

AGENCY: Federal Aviation Administration (FAA), DOT.

ACTION: Final rule.

SUMMARY: The FAA is adopting a new airworthiness directive (AD) for all Airbus Helicopters Model AS332C, AS332C1, AS332L, and AS332L1 helicopters. This AD requires inspecting the affected parts and associated frame bores for discrepancies, applicable corrective actions, and reporting certain information if necessary. This AD was prompted by reports of corrosion on attachment screws and fittings fastening the main gearbox (MGB) suspension bars to the fuselage. The actions of this AD are intended to address an unsafe condition on these products.

DATES: This AD is effective December 7, 2020.

The Director of the Federal Register approved the incorporation by reference of certain documents listed in this AD as of December 7, 2020.

ADDRESSES: For service information identified in this final rule, contact Airbus Helicopters, 2701 N Forum Drive, Grand Prairie, TX 75052; telephone 972–641–0000 or 800–232–0323; fax 972–641–3775; or at *https://www.airbus.com/helicopters/services/technical-support.html.* You may view the referenced service information at the FAA, Office of the Regional Counsel, Southwest Region, 10101 Hillwood Pkwy., Room 6N–321, Fort Worth, TX 76177. It is also available on the internet at *https://www.regulations.gov* by searching for and locating Docket No. FAA–2020–0585.

Examining the AD Docket

You may examine the AD docket on the internet at *https://www.regulations.gov* by searching for and locating Docket No. FAA–2020–0585; or in person at Docket Operations between 9 a.m. and 5 p.m., Monday through Friday, except Federal holidays. The AD docket contains this AD, the European Union Aviation Safety Agency (EASA) AD, any service information that is incorporated by reference, any comments received, and other

information. The street address for Docket Operations is U.S. Department of Transportation, Docket Operations, M–30, West Building Ground Floor, Room W12–140, 1200 New Jersey Avenue SE, Washington, DC 20590.

FOR FURTHER INFORMATION CONTACT:

Kathleen Arrigotti, Aerospace Engineer, Large Aircraft Section, International Validation Branch, FAA, 2200 South 216th St., Des Moines, WA 98198; telephone and fax 206–231–3218; email *kathleen.arrigotti@faa.gov.*

SUPPLEMENTARY INFORMATION:

Discussion

The FAA issued a notice of proposed rulemaking (NPRM) to amend 14 CFR part 39 by adding an AD that would apply to all Airbus Helicopters Model AS332C, AS332C1, AS332L, and AS332L1 helicopters. The NPRM published in the **Federal Register** on July 20, 2020 (85 FR 43749). The NPRM proposed to require accomplishing actions specified in the service information and sending certain inspection results to the manufacturer.

The NPRM was prompted by EASA AD No. 2019–0295, dated December 5, 2019, issued by EASA, which is the Technical Agent for the Member States of the European Union, to correct an unsafe condition for all Airbus Helicopters Model AS332C, AS332C1, AS332L, and AS332L1 helicopters. EASA advises that there were reports of corrosion on attachment screws and fittings fastening the rear MGB suspension bars, right and left hand sides, to the fuselage, and the attachment screws and fitting fastening the front MGB suspension bar to the fuselage. Subsequent investigation determined that during maintenance visits of an identified batch of helicopters between September 2012 and April 2019, application of compound sealant on MGB suspension bar attachment screws may not have been accomplished using the approved maintenance data. The EASA AD requires a one-time inspection of the affected parts, and depending on findings, accomplishment of applicable corrective actions. The compliance times vary depending on helicopter configuration.

For helicopters identified in Airbus Helicopters Alert Service Bulletin (ASB) AS332–53.02.05, Revision 1, dated March 2, 2020, the earliest inspection compliance time is within 100 flight hours or 6 months after the effective date of this AD, whichever occurs first. For helicopters identified in Airbus Helicopters ASB AS332–53.02.07, Revision 0, dated October 21, 2019, the earliest inspection compliance time is within 100 flight hours after the effective date of this AD.

For helicopters identified in Airbus Helicopters ASB AS332–53.02.05, Revision 1, dated March 2, 2020, the latest initial inspection compliance time is within 3,800 flight hours or 3 years and 6 months, whichever occurs first, since the last maintenance action at Airbus Helicopters Marignane. For helicopters identified in Airbus Helicopters ASB AS332–53.02.07, Revision 0, dated October 21, 2019, the latest initial inspection compliance time is within 3,800 flight hours since last removal.

The FAA is issuing this AD to address corrosion on attachment fittings and attachment screws for the MGB suspension bars. This condition, if not addressed, could lead to structural failure of the MGB attachment screws, resulting in detachment of MGB suspension bars from the fuselage and subsequent loss of control of the helicopter.

Comments

The FAA gave the public the opportunity to participate in developing this final rule, but the FAA did not receive any comments on the NPRM or on the determination of the cost to the public.

FAA's Determination

This product has been approved by EASA and is approved for operation in the United States. Pursuant to the FAA's bilateral agreement with the European Union, EASA has notified the FAA of the unsafe condition described in its AD. The FAA is issuing this AD after evaluating all of the information provided by EASA and determining the unsafe condition exists and is likely to exist or develop on other products of these same type design.

Related Service Information Under 1 CFR Part 51

Airbus Helicopters has issued ASB No. AS332–53.02.05, Revision 1, dated March 2, 2020; and ASB No. AS332–53.02.07, Revision 0, dated October 21, 2019, which specify procedures for inspecting the attachment fittings and attachment screws of the MGB suspension bars and their frame bores for discrepancies and corrective actions. This inspection includes an inspection of the attachment fittings and attachment screws of the MGB suspension bars for corrosion and an inspection of the attachment screws for evidence of sealing compound. The corrective actions include replacing or repairing corroded parts and replacing screws that have sealing compound on them. These documents are distinct since they apply to different helicopter models in different configurations.

This service information is reasonably available because the interested parties have access to it through their normal course of business or by the means identified in the **ADDRESSES** section.

Other Related Service Information

Airbus Helicopters has also issued ASB No. AS332–53.02.05, Revision 0, dated April 18, 2019, which specifies procedures for inspecting the attachment fittings and attachment screws of the MGB suspension bars and their frame bores for discrepancies and corrective actions.

Costs of Compliance

The FAA estimates that this AD affects 12 helicopters of U.S. Registry. Labor rates are estimated at $85 per work-hour. Based on these numbers, the FAA estimates that operators may incur the following costs in order to comply with this AD. To comply with this AD, the FAA estimates that it will take up to about 16 work-hours, for an estimated cost of $1,360 per helicopter and $16,320 for the U.S. fleet. The FAA estimates that it will take about 1 hour per helicopter to comply with the on-condition reporting requirement in this AD.

Paperwork Reduction Act

A federal agency may not conduct or sponsor, and a person is not required to respond to, nor shall a person be subject to a penalty for failure to comply with a collection of information subject to the requirements of the Paperwork Reduction Act unless that collection of information displays a currently valid OMB Control Number. The OMB Control Number for this information collection is 2120–0056. Public reporting for this collection of information is estimated to be approximately 1 hour per response, including the time for reviewing instructions, searching existing data sources, gathering and maintaining the data needed, and completing and reviewing the collection of information. All responses to this collection of information are mandatory. Send comments regarding this burden estimate or any other aspect of this collection of information, including suggestions for reducing this burden to: Information Collection Clearance Officer, Federal Aviation Administration, 10101 Hillwood Parkway, Fort Worth, TX 76177–1524.

Authority for This Rulemaking

Title 49 of the United States Code specifies the FAA's authority to issue rules on aviation safety. Subtitle I, section 106, describes the authority of the FAA Administrator. Subtitle VII: Aviation Programs, describes in more detail the scope of the Agency's authority.

The FAA is issuing this rulemaking under the authority described in Subtitle VII, Part A, Subpart III, Section 44701: General requirements. Under that section, Congress charges the FAA with promoting safe flight of civil aircraft in air commerce by prescribing regulations for practices, methods, and procedures the Administrator finds necessary for safety in air commerce. This regulation is within the scope of that authority because it addresses an unsafe condition that is likely to exist or develop on helicopters identified in this rulemaking action.

Regulatory Findings

This AD will not have federalism implications under Executive Order 13132. This AD will not have a substantial direct effect on the States, on the relationship between the national government and the States, or on the distribution of power and responsibilities among the various levels of government.

For the reasons discussed above, I certify that this AD:

(1) Is not a ''significant regulatory action'' under Executive Order 12866,

(2) Will not affect intrastate aviation in Alaska, and

(3) Will not have a significant economic impact, positive or negative, on a substantial number of small entities under the criteria of the Regulatory Flexibility Act.

List of Subjects in 14 CFR Part 39

Air transportation, Aircraft, Aviation safety, Incorporation by reference, Safety.

Adoption of the Amendment

Accordingly, under the authority delegated to me by the Administrator, the FAA amends 14 CFR part 39 as follows:

PART 39—AIRWORTHINESS DIRECTIVES

■ 1. The authority citation for part 39 continues to read as follows:

Authority: 49 U.S.C. 106(g), 40113, 44701.

§ 39.13 [Amended]

■ 2. The FAA amends § 39.13 by adding the following new airworthiness directive:

2020–22–01 Airbus Helicopters: Amendment 39–21297; Docket No. FAA–2020–0585; Product Identifier 2019–SW–112–AD.

(a) Effective Date

This airworthiness directive (AD) becomes effective December 7, 2020.

(b) Affected ADs

None.

(c) Applicability

This AD applies to all Airbus Helicopters Model AS332C, AS332C1, AS332L, and AS332L1 helicopters, certificated in any category.

(d) Subject

Joint Aircraft Service Component (JASC) Code: 5340, Fuselage main, attach fittings.

(e) Reason

This AD was prompted by reports of corrosion on attachment screws and fittings fastening the main gearbox (MGB) suspension bars to the fuselage. The FAA is issuing this AD to address corrosion on attachment fittings and attachment screws for the MGB suspension bars. This condition, if not addressed, could lead to structural failure of the MGB attachment screws, resulting in detachment of MGB suspension bars from the fuselage and subsequent loss of control of the helicopter.

(f) Compliance

You are responsible for performing each action required by this AD within the specified compliance time unless it has already been accomplished prior to that time.

(g) Definitions

Affected parts are attachment screws and fitting(s) fastening the parts identified in paragraphs (g)(1) and (2) of this AD.

(1) Rear MGB suspension bars, right and left sides, to the fuselage.

(2) Front MGB suspension bar to the fuselage.

(h) Inspection

Except as specified in paragraphs (j)(1) through (3) of this AD: Within the applicable compliance times identified in paragraph (h)(1) or (2) of this AD, inspect each affected part and its frame bores for discrepancies, in accordance with the Accomplishment Instructions, Section 3.B.2, of Airbus Helicopters Alert Service Bulletin (ASB) AS332–53.02.05, Revision 1, dated March 2, 2020; or Airbus Helicopters ASB AS332–53.02.07, Revision 0, dated October 21, 2019, as applicable. For the purposes of this inspection, a discrepancy may be indicated by corrosion on the MGB attachment fitting or by sealing compound on the attachment screws.

(1) Table 1 or 2, as applicable, of Section 1.E.2, ''Compliance in service,'' of Airbus Helicopters ASB AS332–53.02.05, Revision 1, dated March 2, 2020.

(2) Table 1 of Section 1.E.2, ''Compliance in service,'' of Airbus Helicopters ASB AS332–53.02.07, dated October 21, 2019.

(i) Corrective Action

Except as required by paragraph (j)(4) of this AD: If, during the inspection required by paragraph (h) of this AD, there is any discrepancy, before further flight, do the applicable corrective action (including replacing or repairing corroded parts and replacing screws that have sealing compound on them), in accordance with the Accomplishment Instructions, Section 3.B.2, of Airbus Helicopters ASB AS332–53.02.05, Revision 1, dated March 2, 2020; or ASB AS332–53.02.07, Revision 0, dated October 21, 2019, as applicable.

(j) Exceptions to Service Information Specifications

(1) Where Airbus Helicopters ASB AS332–53.02.05, Revision 1, dated March 2, 2020, uses the phrase ''Revision 0 of this ASB issued on April 18, 2019,'' this AD requires using ''the effective date of this AD.''

(2) Where Airbus Helicopters ASB AS332–53.02.07, Revision 0, dated October 21, 2019, uses the phrase ''receipt of this ASB,'' this AD requires using ''the effective date of this AD.''

(3) Where Airbus Helicopters ASB AS332–53.02.05, Revision 1, dated March 2, 2020; and ASB AS332–53.02.07, Revision 0, dated October 21, 2019, specify discarding parts, you are not required to discard parts.

(4) Where Airbus Helicopters ASB AS332–53.02.05, Revision 1, dated March 2, 2020; and ASB AS332–53.02.07, Revision 0, dated October 21, 2019, specify contacting Airbus Helicopters for repair instructions: This AD requires repair using a method approved by the Manager, Rotorcraft Standards Branch, FAA. The Manager's approval letter must specifically refer to this AD.

(k) Reporting

If, during the inspection required by paragraph (h) of this AD, there is any discrepancy, report the inspection results to Airbus Helicopters at the applicable time specified in paragraph (k)(1) or (2) of this AD. The report should include the information specified in Appendix 4.A. of Airbus Helicopters ASB AS332–53.02.05, Revision 1, dated March 2, 2020; or ASB AS332–53.02.07, Revision 0, dated October 21, 2019, as applicable.

(1) If the inspection was done on or after the effective date of this AD: Submit the report within 30 days after the inspection.

(2) If the inspection was done before the effective date of this AD: Submit the report within 30 days after the effective date of this AD.

(l) Credit for Previous Actions

For helicopters identified in Airbus Helicopters ASB AS332–53.02.05, Revision 1, dated March 2, 2020: This paragraph provides credit for actions required by paragraphs (g) and (h) of this AD, if those actions were performed before the effective date of this AD using Airbus Helicopters ASB AS332–53.02.05, Revision 0, dated April 18, 2019.

(m) Paperwork Reduction Act Burden Statement

A federal agency may not conduct or sponsor, and a person is not required to

respond to, nor shall a person be subject to a penalty for failure to comply with a collection of information subject to the requirements of the Paperwork Reduction Act unless that collection of information displays a currently valid OMB Control Number. The OMB Control Number for this information collection is 2120–0056. Public reporting for this collection of information is estimated to be approximately 1 hour per response, including the time for reviewing instructions, searching existing data sources, gathering and maintaining the data needed, and completing and reviewing the collection of information. All responses to this collection of information are mandatory. Send comments regarding this burden estimate or any other aspect of this collection of information, including suggestions for reducing this burden to: Information Collection Clearance Officer, Federal Aviation Administration, 10101 Hillwood Parkway, Fort Worth, TX 76177–1524.

(n) Alternative Methods of Compliance (AMOCs)

(1) The Manager, Rotorcraft Standards Branch, FAA, may approve AMOCs for this AD. Send your proposal to: Manager, Rotorcraft Standards Branch, FAA, 10101 Hillwood Pkwy., Fort Worth, TX 76177; telephone 817–222–5110; email *9-ASW-FTW-AMOC-Requests@faa.gov.*

(2) For operations conducted under a 14 CFR part 119 operating certificate or under 14 CFR part 91, subpart K, the FAA suggests that you notify your principal inspector, or lacking a principal inspector, the manager of the local flight standards district office or certificate holding district office, before operating any aircraft complying with this AD through an AMOC.

(o) Related Information

(1) The subject of this AD is addressed in European Union Aviation Safety Agency (EASA) AD No. 2019–0295, dated December 5, 2019. You may view the EASA AD on the internet at *https://www.regulations.gov* in Docket No. FAA–2020–0585.

(2) For service information identified in this AD, contact Airbus Helicopters, 2701 N Forum Drive, Grand Prairie, TX 75052; telephone 972–641–0000 or 800–232–0323; fax 972–641–3775; or at *https://www.airbus.com/helicopters/services/technical-support.html.* You may view a copy of the service information at the FAA, Office of the Regional Counsel, Southwest Region, 10101 Hillwood Pkwy., Room 6N–321, Fort Worth, TX 76177.

(p) Material Incorporated by Reference

(1) The Director of the Federal Register approved the incorporation by reference of the service information listed in this paragraph under 5 U.S.C. 552(a) and 1 CFR part 51.

(2) You must use this service information as applicable to do the actions required by this AD, unless the AD specifies otherwise.

(i) Airbus Helicopters Alert Service Bulletin (ASB) AS332–53.02.05, Revision 1, dated March 2, 2020.

(ii) Airbus Helicopters ASB AS332–53.02.07, Revision 0, dated October 21, 2019.

(3) For service information identified in this AD, contact Airbus Helicopters, 2701 N Forum Drive, Grand Prairie, TX 75052; telephone 972–641–0000 or 800–232–0323; fax 972–641–3775; or at *https://www.airbus.com/helicopters/services/technical-support.html.*

(4) You may view this service information at the FAA, Office of the Regional Counsel, Southwest Region, 10101 Hillwood Pkwy., Room 6N–321, Fort Worth, TX 76177. For information on the availability of this material at the FAA, call 817–222–5110.

(5) You may view this service information that is incorporated by reference at the National Archives and Records Administration (NARA). For information on the availability of this material at NARA, email *fedreg.legal@nara.gov,* or go to: *https://www.archives.gov/federal-register/cfr/ibr-locations.html.*

Issued on October 13, 2020.

Lance T. Gant,

Director, Compliance & Airworthiness Division, Aircraft Certification Service.

[FR Doc. 2020–23976 Filed 10–30–20; 8:45 am]

BILLING CODE 4910–13–P

DEPARTMENT OF TRANSPORTATION

Federal Aviation Administration

14 CFR Part 39

[Docket No. FAA–2020–0583; Product Identifier 2020–NM–071–AD; Amendment 39–21291; AD 2020–21–18]

RIN 2120–AA64

Airworthiness Directives; Airbus SAS Airplanes

AGENCY: Federal Aviation Administration (FAA), Department of Transportation (DOT).

ACTION: Final rule.

SUMMARY: The FAA is superseding Airworthiness Directive (AD) 2019–14–09, which applied to all Airbus SAS Model A330–200 Freighter series airplanes. AD 2019–14–09 required repetitive detailed inspections, including functional testing, of the oxygen crew and courier distribution system (OCCDS) and replacement of affected part(s) if necessary. This AD retains the requirements of AD 2019–14–09 and requires replacement of all affected parts with improved serviceable parts, which is terminating action for the repetitive inspections, as specified in a European Union Aviation Safety Agency (EASA) AD, which will be incorporated by reference. The FAA is issuing this AD to address the unsafe condition on these products.

DATES: This AD is effective December 7, 2020.

The Director of the Federal Register approved the incorporation by reference of a certain publication listed in this AD as of December 7, 2020.

ADDRESSES: For the EASA material incorporated by reference (IBR) in this AD, contact the EASA, Konrad-Adenauer-Ufer 3, 50668 Cologne, Germany; telephone +49 221 8999 000; email *ADs@easa.europa.eu;* internet *www.easa.europa.eu.* You may find this IBR material on the EASA website at *https://ad.easa.europa.eu.* You may view this IBR material at the FAA, Airworthiness Products Section, Operational Safety Branch, 2200 South 216th St., Des Moines, WA. For information on the availability of this material at the FAA, call 206–231–3195. It is also available in the AD docket on the internet at *https://www.regulations.gov* by searching for and locating Docket No. FAA–2020–0583.

Examining the AD Docket

You may examine the AD docket on the internet at *https://www.regulations.gov* by searching for and locating Docket No. FAA–2020–0583; or in person at Docket Operations between 9 a.m. and 5 p.m., Monday through Friday, except Federal holidays. The AD docket contains this final rule, any comments received, and other information. The address for Docket Operations is U.S. Department of Transportation, Docket Operations, M–30, West Building Ground Floor, Room W12–140, 1200 New Jersey Avenue SE, Washington, DC 20590.

FOR FURTHER INFORMATION CONTACT: Vladimir Ulyanov, Aerospace Engineer, Large Aircraft Section, International Validation Branch, FAA, 2200 South 216th St., Des Moines, WA 98198; telephone and fax 206–231–3229; email *Vladimir.Ulyanov@faa.gov.*

SUPPLEMENTARY INFORMATION:

Discussion

The EASA, which is the Technical Agent for the Member States of the European Union, has issued EASA AD 2020–0092, dated April 24, 2020 (''EASA AD 2020–0092'') (also referred to as the Mandatory Continuing Airworthiness Information, or ''the MCAI''), to correct an unsafe condition for certain Airbus SAS Model A330–223F and A330–243F airplanes. EASA AD 2020–0092 superseded EASA AD 2019–0027, dated February 4, 2019 (''EASA AD 2019–0027'') (which corresponds to FAA AD 2019–14–09, Amendment 39–19687 (84 FR 37957, August 5, 2019) (''AD 2019–14–09'')).

The FAA issued a notice of proposed rulemaking (NPRM) to amend 14 CFR part 39 to supersede AD 2019–14–09.

AD 2019–14–09 applied to all Airbus SAS Model A330–200 Freighter series airplanes. The NPRM published in the **Federal Register** on July 17, 2020 (85 FR 43503). The NPRM was prompted by reports of cracked flexible hoses of the OCCDS on Model A330 freighter airplanes and the FAA's determination that all affected parts must be replaced with improved flexible oxygen hoses in order to address the unsafe condition. The NPRM proposed to retain the requirements of AD 2019–14–09 and require replacement of all affected parts with improved serviceable parts, which is terminating action for the repetitive inspections, as specified in EASA AD 2020–0092.

The FAA is issuing this AD to address cracked oxygen hoses. This condition, if not addressed, could lead to oxygen leakage in the flexible hose of the OCCDS, which, in combination with in-flight depressurization, smoke in the flight deck, or a smoke evacuation procedure, could result in crew injury and reduced control of the airplane. See the MCAI for additional background information.

Comments

The FAA gave the public the opportunity to participate in developing this final rule. The FAA received no comments on the NPRM or on the determination of the cost to the public.

Conclusion

The FAA reviewed the relevant data and determined that air safety and the public interest require adopting this final rule as proposed, except for minor editorial changes. The FAA has determined that these minor changes:

- Are consistent with the intent that was proposed in the NPRM for addressing the unsafe condition; and
- Do not add any additional burden upon the public than was already proposed in the NPRM.

Related IBR Material Under 1 CFR Part 51

EASA AD 2020–0092 describes procedures for repetitive detailed inspections, including functional testing, of the OCCDS, replacement of affected part(s) if necessary, and modification of the airplane by replacing all remaining affected parts with improved serviceable parts. This material is reasonably available because the interested parties have access to it through their normal course of business or by the means identified in the **ADDRESSES** section.

Costs of Compliance

The FAA estimates that this AD affects 6 airplanes of U.S. registry. The FAA estimates the following costs to comply with this AD:

ESTIMATED COSTS FOR REQUIRED ACTIONS

Action	Labor cost	Parts cost	Cost per product	Cost on U.S. operators
Retained actions from AD 2019–14–09.	14 work-hours × $85 per hour = $1,190	$0	$1,190	$7,140.
New actions	Up to 26 work-hours × $85 per hour = Up to $2,210	$9,800	Up to $12,010	Up to $72,060.

According to the manufacturer, some or all of the costs of this AD may be covered under warranty, thereby reducing the cost impact on affected individuals. The FAA does not control warranty coverage for affected individuals. As a result, the FAA has included all known costs in the cost estimate.

Authority for This Rulemaking

Title 49 of the United States Code specifies the FAA's authority to issue rules on aviation safety. Subtitle I, section 106, describes the authority of the FAA Administrator. Subtitle VII: Aviation Programs, describes in more detail the scope of the Agency's authority.

The FAA is issuing this rulemaking under the authority described in Subtitle VII, Part A, Subpart III, Section 44701: General requirements. Under that section, Congress charges the FAA with promoting safe flight of civil aircraft in air commerce by prescribing regulations for practices, methods, and procedures the Administrator finds necessary for safety in air commerce. This regulation is within the scope of that authority because it addresses an unsafe condition that is likely to exist or develop on products identified in this rulemaking action.

Regulatory Findings

This AD will not have federalism implications under Executive Order 13132. This AD will not have a substantial direct effect on the States, on the relationship between the national government and the States, or on the distribution of power and responsibilities among the various levels of government.

For the reasons discussed above, I certify that this AD:

(1) Is not a ''significant regulatory action'' under Executive Order 12866,

(2) Will not affect intrastate aviation in Alaska, and

(3) Will not have a significant economic impact, positive or negative, on a substantial number of small entities under the criteria of the Regulatory Flexibility Act.

List of Subjects in 14 CFR Part 39

Air transportation, Aircraft, Aviation safety, Incorporation by reference, Safety.

Adoption of the Amendment

Accordingly, under the authority delegated to me by the Administrator, the FAA amends 14 CFR part 39 as follows:

PART 39—AIRWORTHINESS DIRECTIVES

■ 1. The authority citation for part 39 continues to read as follows:

Authority: 49 U.S.C. 106(g), 40113, 44701.

§ 39.13 [Amended]

■ 2. The FAA amends § 39.13 by:

■ a. Removing Airworthiness Directive (AD) 2019–14–09, Amendment 39–19687 (84 FR 37957, August 5, 2019), and

■ b. Adding the following new AD:

2020–21–18 Airbus SAS: Amendment 39–21291; Docket No. FAA–2020–0583; Product Identifier 2020–NM–071–AD.

(a) Effective Date

This AD is effective December 7, 2020.

(b) Affected ADs

This AD replaces AD 2019–14–09, Amendment 39–19687 (84 FR 37957, August 5, 2019) (''AD 2019–14–09'').

(c) Applicability

This AD applies to Airbus SAS Model A330–223F and –243F airplanes, certificated in any category, as identified in European Union Aviation Safety Agency (EASA) AD

2020–0092, dated April 24, 2020 (''EASA AD 2020–0092'').

(d) Subject

Air Transport Association (ATA) of America Code 35, Oxygen.

(e) Reason

This AD was prompted by reports of cracked flexible hoses of the oxygen crew and courier distribution system (OCCDS) on Model A330 freighter airplanes. The FAA is proposing this AD to address cracked oxygen hoses. This condition, if not addressed, could lead to oxygen leakage in the flexible hose of the OCCDS, which, in combination with in-flight depressurization, smoke in the flight deck, or a smoke evacuation procedure, could result in crew injury and reduced control of the airplane.

(f) Compliance

Comply with this AD within the compliance times specified, unless already done.

(g) Requirements

Except as specified in paragraph (h) of this AD: Comply with all required actions and compliance times specified in, and in accordance with, EASA AD 2020–0092.

(h) Exceptions to EASA AD 2020–0092

(1) Where EASA AD 2020–0092 refers to its effective date, this AD requires using the effective date of this AD.

(2) Where EASA AD 2020–0092 refers to February 18, 2019 (the effective date of EASA AD 2019–0027, dated February 4, 2019), this AD requires using September 9, 2019 (the effective date of AD 2019–14–09).

(3) The ''Remarks'' section of EASA AD 2020–0092 does not apply to this AD.

(i) Other FAA AD Provisions

The following provisions also apply to this AD:

(1) *Alternative Methods of Compliance (AMOCs):* The Manager, Large Aircraft Section, International Validation Branch, FAA, has the authority to approve AMOCs for this AD, if requested using the procedures found in 14 CFR 39.19. In accordance with 14 CFR 39.19, send your request to your principal inspector or responsible Flight Standards Office, as appropriate. If sending information directly to the Large Aircraft Section, International Validation Branch, send it to the attention of the person identified in paragraph (j) of this AD. Information may be emailed to: *9-AVS-AIR-730-AMOC@faa.gov.* Before using any approved AMOC, notify your appropriate principal inspector, or lacking a principal inspector, the manager of the responsible Flight Standards Office.

(2) *Contacting the Manufacturer:* For any requirement in this AD to obtain instructions from a manufacturer, the instructions must be accomplished using a method approved by the Manager, Large Aircraft Section, International Validation Branch, FAA; or EASA; or Airbus SAS's EASA Design Organization Approval (DOA). If approved by the DOA, the approval must include the DOA-authorized signature.

(3) *Required for Compliance (RC):* For any service information referenced in EASA AD 2020–0092 that contains RC procedures and tests: Except as required by paragraph (i)(2) of this AD, RC procedures and tests must be done to comply with this AD; any procedures or tests that are not identified as RC are recommended. Those procedures and tests that are not identified as RC may be deviated from using accepted methods in accordance with the operator's maintenance or inspection program without obtaining approval of an AMOC, provided the procedures and tests identified as RC can be done and the airplane can be put back in an airworthy condition. Any substitutions or changes to procedures or tests identified as RC require approval of an AMOC.

(j) Related Information

For more information about this AD, contact Vladimir Ulyanov, Aerospace Engineer, Large Aircraft Section, International Validation Branch, FAA, 2200 South 216th St., Des Moines, WA 98198; telephone and fax 206–231–3229; email *Vladimir.Ulyanov@faa.gov.*

(k) Material Incorporated by Reference

(1) The Director of the Federal Register approved the incorporation by reference (IBR) of the service information listed in this paragraph under 5 U.S.C. 552(a) and 1 CFR part 51.

(2) You must use this service information as applicable to do the actions required by this AD, unless this AD specifies otherwise.

(3) The following service information was approved for IBR on December 7, 2020.

(i) European Union Aviation Safety Agency (EASA) AD 2020–0092, dated April 24, 2020.

(ii) [Reserved]

(4) For EASA AD 2020–0092, contact the EASA, Konrad-Adenauer-Ufer 3, 50668 Cologne, Germany; telephone +49 221 8999 000; email *ADs@easa.europa.eu;* internet *www.easa.europa.eu.* You may find this EASA AD on the EASA website at *https://ad.easa.europa.eu.*

(5) You may view this material at the FAA, Airworthiness Products Section, Operational Safety Branch, 2200 South 216th St., Des Moines, WA. For information on the availability of this material at the FAA, call 206–231–3195. This material may be found in the AD docket on the internet at *https://www.regulations.gov* by searching for and locating Docket No. FAA–2020–0583.

(6) You may view this material that is incorporated by reference at the National Archives and Records Administration (NARA). For information on the availability of this material at NARA, email *fedreg.legal@nara.gov,* or go to: *http://www.archives.gov/federal-register/cfr/ibr-locations.html.*

Issued on October 8, 2020.

Gaetano A. Sciortino,

Deputy Director for Strategic Initiatives, Compliance & Airworthiness Division, Aircraft Certification Service.

[FR Doc. 2020–24099 Filed 10–30–20; 8:45 am]

BILLING CODE 4910–13–P

DEPARTMENT OF TRANSPORTATION

Federal Aviation Administration

14 CFR Part 39

[Docket No. FAA–2020–0618; Product Identifier 2019–SW–064–AD; Amendment 39–21288; AD 2020–21–15]

RIN 2120–AA64

Airworthiness Directives; Airbus Helicopters

AGENCY: Federal Aviation Administration (FAA), DOT.

ACTION: Final rule.

SUMMARY: The FAA is adopting a new airworthiness directive (AD) for Airbus Helicopters Model AS–365N2, AS 365 N3, EC 155B, EC155B1, and SA–365N1 helicopters. This AD requires inspecting the tail rotor gearbox (TGB) housing recess, and depending on the inspection results, performing more in-depth inspections and removing certain parts from service. This AD also prohibits installing a TGB unless it has passed certain inspections and has a new TGB control rod bearing installed. This AD was prompted by the discovery of a foreign object obstructing the oil duct of a TGB control bearing. The actions of this AD are intended to address an unsafe condition on these products.

DATES: This AD is effective December 7, 2020.

The Director of the Federal Register approved the incorporation by reference of certain documents listed in this AD as of December 7, 2020.

ADDRESSES: For service information identified in this final rule, contact Airbus Helicopters, 2701 N. Forum Drive, Grand Prairie, TX 75052; telephone 972–641–0000 or 800–232–0323; fax 972–641–3775; or at *https://www.airbus.com/helicopters/services/technical-support.html.* You may view the referenced service information at the FAA, Office of the Regional Counsel, Southwest Region, 10101 Hillwood Pkwy., Room 6N–321, Fort Worth, TX 76177. It is also available on the internet at *https://www.regulations.gov* by searching for and locating Docket No. FAA–2020–0618.

Examining the AD Docket

You may examine the AD docket on the internet at *https://www.regulations.gov* by searching for and locating Docket No. FAA–2020–0618; or in person at Docket Operations between 9 a.m. and 5 p.m., Monday through Friday, except Federal holidays. The AD docket contains this AD, the European Union Aviation Safety Agency

(EASA) AD, any service information that is incorporated by reference, any comments received, and other information. The street address for Docket Operations is U.S. Department of Transportation, Docket Operations, M–30, West Building Ground Floor, Room W12–140, 1200 New Jersey Avenue SE, Washington, DC 20590.

FOR FURTHER INFORMATION CONTACT: Rao Edupuganti, Aviation Safety Engineer, Regulations and Policy Section, Rotorcraft Standards Branch, FAA, 10101 Hillwood Pkwy., Fort Worth, TX 76177; telephone 817–222–5110; email *rao.edupuganti@faa.gov.*

SUPPLEMENTARY INFORMATION:

Discussion

The FAA issued a notice of proposed rulemaking (NPRM) to amend 14 CFR part 39 by adding an AD that would apply to Airbus Helicopters Model AS–365N2, AS 365 N3, EC 155B, EC155B1, and SA–365N1 helicopters. The NPRM published in the **Federal Register** on June 23, 2020 (85 FR 37591). The NPRM proposed to require opening the TGB oil filter plug cover and removing the TGB oil filter plug, and then borescope inspecting for oil retention and visibility of the two T holes in the TGB housing recess. If there is any oil retention and the two T holes are not completely visible, the NPRM proposed to require removing the TGB control rod and inspecting for and removing any foreign object in the TGB oil duct. The NPRM also proposed to require re-inspecting the TGB housing recess with all of the oil drained. If, during the re-inspection, there is any oil retention and the two T holes are not completely visible, the NPRM proposed to require replacing the TGB. If, during the re-inspection, there is no oil retention and the two T holes are completely visible, the NPRM proposed to require inspecting for and removing any foreign object from the TGB oil duct and inspecting the TGB oil duct for correct oil flow. If the oil does not flow correctly, the NPRM proposed to require replacing the TGB. If the oil flows correctly, the NPRM proposed to require removing the TGB control rod bearing from service. The NPRM also proposed to prohibit the installation of a TGB unless it passes the proposed inspections. A non-installed TGB would be inspected in a level position using shims.

The NPRM was prompted by EASA AD No. 2019–0165–E, dated July 12, 2019, issued by EASA, which is the Technical Agent for the Member States of the European Union, to correct an unsafe condition for Airbus Helicopters (formerly Eurocopter, Eurocopter France, Aerospatiale, Sud Aviation) Model AS 365 N2, AS 365 N3, EC 155 B, EC 155 B1, and SA 365 N1 helicopters. EASA advises of a foreign object that was found obstructing the oil duct of the TGB control bearing during a routine inspection, causing a lack of lubrication on the bearing. EASA states this condition, if not detected and corrected, could affect the correct operation of the TGB and possibly result in reduced control of the helicopter. Accordingly, the EASA AD requires a one-time inspection of the TGB housing recess and TGB oil duct housing, and depending on the findings, applicable investigative and corrective actions. The EASA AD also prohibits installation of a TGB unless it has passed the specified inspections.

Comments

The FAA gave the public the opportunity to participate in developing this final rule. The following presents the comment received on the NPRM and the FAA's response to the comment.

Request

A commenter asked who will be conducting the TGB inspections and how often the inspections will take place. A mechanic that meets the requirements of 14 CFR part 65 subpart D must perform the TGB inspections, which are required within 55 hours time-in-service or 5 months, whichever occurs first.

FAA's Determination

These helicopters have been approved by EASA and are approved for operation in the United States. Pursuant to the FAA's bilateral agreement with the European Union, EASA has notified the FAA of the unsafe condition described in its AD. The FAA is issuing this AD after evaluating all of the information provided by EASA and determining the unsafe condition exists and is likely to exist or develop on other helicopters of the same type designs and that air safety and the public interest require adopting the AD requirements as proposed except for updating the Costs of Compliance section due to an increase in the number of registered helicopters. These changes are consistent with the intent that was proposed in the NPRM for addressing the unsafe condition and do not add any additional burden upon the public than was already proposed in the NPRM.

Differences Between this AD and the EASA AD

If required to remove a TGB, the EASA AD requires marking and returning the TGB to Airbus Helicopters, whereas this AD does not require marking or returning the TGB to Airbus Helicopters.

Related Service Information Under 1 CFR Part 51

The FAA reviewed one document that co-publishes four Airbus Helicopters Emergency Alert Service Bulletin (EASB) identification numbers: No. 65.00.09 for non FAA-type certificated military Model AS565MA, MB, MBe, SA, SB, and UB helicopters; No. 65.00.19 for Model AS365N1, N2, and N3 helicopters, and non FAA-type certificated military Model AS365F, Fi, K, and K2 helicopters; No. 65.06 for non FAA-type certificated military Model SA366GA helicopters; and No. 65A008 for Model EC155B and B1 helicopters, all Revision 0 and dated July 10, 2019. EASB Nos. 65.00.19 and 65A008 are incorporated by reference in this AD. EASB Nos. 65.00.09 and 65.06 are not incorporated by reference in this AD.

This service information specifies procedures, using an endoscope (borescope), to inspect the TGB housing recess for oil retention and the two T holes for visibility. If there is oil retention and the two T holes are not visible, this service information specifies removing the TGB control rod and inspecting for and removing any foreign objects in the TGB oil duct, and then repeating the TGB housing recess inspections. If there is oil retention and the two T holes are not visible after these additional inspections, the service information specifies marking the TGB as not fit for helicopter installation and returning the TGB to Airbus Helicopters. If there is no oil retention and the two T holes are visible after these additional inspections, the service information specifies removing any foreign objects in the TGB oil duct and inspecting for proper oil flow at the end of the BTP oil duct cover. If the oil does not flow properly, this service information specifies marking the TGB as not fit for helicopter installation and returning the TGB to Airbus Helicopters. If the oil flows properly, the service information specifies replacing the TGB control rod bearing with a new bearing.

This service information also specifies procedures to close the filter plug cover with an airworthy O-ring, install the filter plug, replace a TGB, and perform a ground run-up. Additionally, this service information specifies procedures to perform the inspections on a non-installed TGB.

This service information is reasonably available because the interested parties have access to it through their normal course of business or by the means identified in the **ADDRESSES** section.

Costs of Compliance

The FAA estimates that this AD affects 51 helicopters of U.S. Registry. The FAA estimates that operators may incur the following costs in order to comply with this AD. Labor rates are estimated at $85 per work-hour.

Inspecting the TGB housing recess takes about 2 work-hours for an estimated cost of $170 per helicopter and $8,670 for the U.S. fleet.

Inspecting for and removing any foreign objects takes a minimal amount of time for a nominal cost.

Removing any oil retention and re-inspecting the TGB takes about 5 work-hours for an estimated cost of $425 per helicopter.

Inspecting for correct oil flow takes about 1 work-hour for an estimated cost of $85 per helicopter.

Replacing the TGB control rod bearing takes about 8 work-hours and parts cost about $2,000 for an estimated replacement cost of $2,680 per bearing.

Replacing a TGB takes about 40 work-hours and parts cost about $48,600 (overhauled) for an estimated replacement cost of $52,000 per TGB.

Authority for This Rulemaking

Title 49 of the United States Code specifies the FAA's authority to issue rules on aviation safety. Subtitle I, section 106, describes the authority of the FAA Administrator. Subtitle VII: Aviation Programs, describes in more detail the scope of the Agency's authority.

The FAA is issuing this rulemaking under the authority described in Subtitle VII, Part A, Subpart III, Section 44701: General requirements. Under that section, Congress charges the FAA with promoting safe flight of civil aircraft in air commerce by prescribing regulations for practices, methods, and procedures the Administrator finds necessary for safety in air commerce. This regulation is within the scope of that authority because it addresses an unsafe condition that is likely to exist or develop on helicopters identified in this rulemaking action.

Regulatory Findings

This AD will not have federalism implications under Executive Order 13132. This AD will not have a substantial direct effect on the States, on the relationship between the national government and the States, or on the distribution of power and responsibilities among the various levels of government.

For the reasons discussed above, I certify that this AD:

(1) Is not a ''significant regulatory action'' under Executive Order 12866,

(2) Will not affect intrastate aviation in Alaska, and

(3) Will not have a significant economic impact, positive or negative, on a substantial number of small entities under the criteria of the Regulatory Flexibility Act.

List of Subjects in 14 CFR Part 39

Air transportation, Aircraft, Aviation safety, Incorporation by reference, Safety.

Adoption of the Amendment

Accordingly, under the authority delegated to me by the Administrator, the FAA amends 14 CFR part 39 as follows:

PART 39—AIRWORTHINESS DIRECTIVES

■ 1. The authority citation for part 39 continues to read as follows:

Authority: 49 U.S.C. 106(g), 40113, 44701.

§ 39.13 [Amended]

■ 2. The FAA amends § 39.13 by adding the following new airworthiness directive (AD):

2020–21–15 Airbus Helicopters: Amendment 39–21288; Docket No. FAA–2020–0618; Product Identifier 2019–SW–064–AD.

(a) Applicability

This AD applies to Airbus Helicopters Model AS–365N2, AS 365 N3, EC 155B, EC155B1, and SA–365N1 helicopters, certificated in any category.

(b) Unsafe Condition

This AD defines the unsafe condition as obstruction of the oil duct of the tail rotor gearbox (TGB) control bearing. This condition could result in a lack of lubrication on the TGB control bearing, which could affect the correct operation of the TGB, and subsequent reduced control of the helicopter.

(c) Effective Date

This AD becomes effective December 7, 2020.

(d) Compliance

You are responsible for performing each action required by this AD within the specified compliance time unless it has already been accomplished prior to that time.

(e) Required Actions

(1) Within 55 hours time-in-service or 5 months, whichever occurs first: (i) Open the TGB oil filter plug cover (cover) identified as ''b'' in Detail ''A'' and Detail ''B'' in Figure 1 of Airbus Helicopters Emergency Alert Service Bulletin (EASB) No. 65.00.19 or Airbus Helicopters EASB No. 65A008, both Revision 0 and dated July 10, 2019 (EASB 65.00.19 or EASB 65A008), as applicable to your model helicopter, by removing any lockwire, opening the cover (b), and removing the strainer (e) using a screwdriver. Remove the TGB oil filter plug (plug) identified as ''h'' in Detail ''B'' in Figure 1 of EASB 65.00.19 or EASB 65A008, as applicable to your model helicopter, by removing the sealing compound at the base of the plug (h), marking the base of the plug (h) and the TGB housing (c), and removing and cleaning the plug (h) and the exterior surface of the TGB housing (c) surrounding the plug (h) installation area.

(ii) Using an adjustable or fixed head borescope with a 6 mm or larger diameter camera probe, inspect for operating oil (oil) retention and visibility of the two T holes in the TGB oil housing recess (housing recess) (towards the rear of the helicopter) identified as ''g'' in Section C–C in Figure 2 of EASB 65.00.19 or EASB 65A008, as applicable to your model helicopter.

(A) If there is any oil retention in the housing recess (g) and the two T holes are not completely visible as shown in photo 1, in the Accomplishment Instructions, paragraph 3.B.2.b., of EASB 65.00.19 or EASB 65A008, as applicable to your model helicopter, before further flight, remove the TGB control rod and inspect for and remove any foreign objects in the TGB oil duct (oil duct) identified as ''k'' in Detail ''D'' of Figure 2 of EASB 65.00.19 or EASB 65A008, as applicable to your model helicopter.

(B) With all of the oil drained from the housing recess (g), inspect for oil retention and visibility of the two T holes in the housing recess (g) as required by paragraph (e)(1)(ii) of this AD.

(*1*) If there is any oil retention in the housing recess (g) and the two T holes are not completely visible, before further flight, replace the TGB.

(*2*) If there is no oil retention in the housing recess (g) and the two T holes are completely visible, before further flight:

(*i*) Inspect for any foreign objects in the oil duct identified as ''k'' in Section EE of Figure 3 of EASB 65.00.19 or EASB 65A008, as applicable to your model helicopter. If there is any foreign object, before further flight, remove each foreign object.

(*ii*) Inspect for oil flow at the end of the oil duct (k) BTP (q) cover by following the procedures in the second step through the sixth step, inclusive, of the Accomplishment Instructions, paragraph 3.B.3.b., of EASB 65.00.19 or EASB 65A008, as applicable to your model helicopter.

(*iii*) If the oil does not flow at the end of the oil duct (k) BTP (q) cover, before further flight, replace the TGB.

(*iv*) If the oil flows at the end of the oil duct (k) BTP (q) cover, before further flight, remove from service the TGB control rod bearing.

(2) As of the effective date of this AD, do not install a TGB on any helicopter unless, with the non-installed TGB in a level position using shims, the requirements of paragraph (e)(1) of this AD have been accomplished. Unless already done, installation of a new TGB control rod bearing is also required. Accomplishment Instructions, paragraph 3.B.6., of EASB 65.00.19 and EASB 65A008, as applicable to your model helicopter, contain information pertaining to inspecting a non-installed TGB. A TGB with a log card entry showing it has

passed the requirements in the Accomplishment Instructions, paragraph 3.B.6., of EASB 65.00.19 and EASB 65A008, as applicable to your model helicopter, is acceptable for compliance with this paragraph.

(f) Alternative Methods of Compliance (AMOCs)

(1) The Manager, Rotorcraft Standards Branch, FAA, may approve AMOCs for this AD. Send your proposal to: Rao Edupuganti, Aviation Safety Engineer, Regulations and Policy Section, Rotorcraft Standards Branch, FAA, 10101 Hillwood Pkwy., Fort Worth, TX 76177; telephone 817–222–5110; email *9-ASW-FTW-AMOC-Requests@faa.gov.*

(2) For operations conducted under a 14 CFR part 119 operating certificate or under 14 CFR part 91, subpart K, the FAA suggests that you notify your principal inspector, or lacking a principal inspector, the manager of the local flight standards district office or certificate holding district office, before operating any aircraft complying with this AD through an AMOC.

(g) Additional Information

The subject of this AD is addressed in European Union Aviation Safety Agency (EASA) AD No. 2019–0165–E, dated July 12, 2019. You may view the EASA AD on the internet at *https://www.regulations.gov* in Docket No. FAA–2020–0618.

(h) Subject

Joint Aircraft Service Component (JASC) Code: 62, Tail Rotor Gearbox.

(i) Material Incorporated by Reference

(1) The Director of the Federal Register approved the incorporation by reference of the service information listed in this paragraph under 5 U.S.C. 552(a) and 1 CFR part 51.

(2) You must use this service information as applicable to do the actions required by this AD, unless the AD specifies otherwise.

(i) Airbus Helicopters Emergency Alert Service Bulletin (EASB) No. 65.00.19, Revision 0, dated July 10, 2019.

(ii) Airbus Helicopters EASB No. 65A008, Revision 0, dated July 10, 2019.

Note 1 to paragraph (i)(2): Airbus Helicopters EASB Nos. 65.00.19 and 65A008, each Revision 0 and dated July 10, 2019, are co-published as one document along with Airbus Helicopters EASB Nos. 65.00.09 and 65.06, each Revision 0 and dated July 10, 2019, which are not incorporated by reference in this AD.

(3) For service information identified in this AD, contact Airbus Helicopters, 2701 N. Forum Drive, Grand Prairie, TX 75052; telephone 972–641–0000 or 800–232–0323; fax 972–641–3775; or at *https://www.airbus.com/helicopters/services/technical-support.html.*

(4) You may view this service information at the FAA, Office of the Regional Counsel, Southwest Region, 10101 Hillwood Pkwy., Room 6N–321, Fort Worth, TX 76177. For information on the availability of this material at the FAA, call 817–222–5110.

(5) You may view this service information that is incorporated by reference at the National Archives and Records Administration (NARA). For information on the availability of this material at NARA, email *fedreg.legal@nara.gov,* or go to: *https://www.archives.gov/federal-register/cfr/ibr-locations.html.*

Issued on October 6, 2020.

Lance T. Gant,

Director, Compliance & Airworthiness Division, Aircraft Certification Service.

[FR Doc. 2020–23977 Filed 10–30–20; 8:45 am]

BILLING CODE 4910–13–P

DEPARTMENT OF TRANSPORTATION

Federal Aviation Administration

14 CFR Part 39

[Docket No. FAA–2020–0472; Project Identifier 2018–CE–060–AD; Amendment 39–21295; AD 2020–21–22]

RIN 2120–AA64

Airworthiness Directives; Textron Aviation Inc. Airplanes

AGENCY: Federal Aviation Administration (FAA), DOT.

ACTION: Final rule.

SUMMARY: The FAA is adopting a new airworthiness directive (AD) for all Textron Aviation Inc. (Textron) Models 180, 180A, 180B, 180C, 180D, 180E, 180F, 180G, 180H, 180J, 180K, 182, 182A, 182B, 182C, 182D, 185, 185A, 185B, 185C, 185D, 185E, A185E, and A185F airplanes. This AD was prompted by a report of cracks found in the tailcone and horizontal stabilizer attachment structure. This AD requires inspecting the tailcone and horizontal stabilizer for corrosion and cracks and repairing or replacing damaged parts as necessary. The FAA is issuing this AD to address the unsafe condition on these products.

DATES: This AD is effective December 7, 2020.

The Director of the Federal Register approved the incorporation by reference of a certain publication listed in this AD as of December 7, 2020.

ADDRESSES: For service information identified in this final rule, contact Textron Aviation Customer Service, P.O. Box 7706, Wichita, Kansas 67277, (316) 517–5800; *customercare@txtav.com;* internet: *https://txtav.com.* You may view this service information at the FAA, Airworthiness Products Section, Operational Safety Branch, 901 Locust, Kansas City, Missouri 64106. For information on the availability of this material at the FAA, call (816) 329–4148. It is also available on the internet at *https://www.regulations.gov* by searching for and locating Docket No. FAA–2020–0472.

Examining the AD Docket

You may examine the AD docket on the internet at *https://www.regulations.gov* by searching for and locating Docket No. FAA–2020–0472; or in person at Docket Operations between 9 a.m. and 5 p.m., Monday through Friday, except Federal holidays. The AD docket contains this final rule, the regulatory evaluation, any comments received, and other information. The address for Docket Operations is U.S. Department of Transportation, Docket Operations, M–30, West Building Ground Floor, Room W12–140, 1200 New Jersey Avenue SE, Washington, DC 20590.

FOR FURTHER INFORMATION CONTACT: Tara Shawn, Aerospace Engineer, Wichita ACO Branch, 1801 Airport Road, Room 100, Wichita, Kansas 67209; telephone: (316) 946–4141; fax: (316) 946–4107; email: *tara.shawn@faa.gov* or *Wichita-COS@faa.gov.*

SUPPLEMENTARY INFORMATION:

Discussion

The FAA issued a notice of proposed rulemaking (NPRM) to amend 14 CFR part 39 by adding an AD that would apply to all Textron Aviation Inc. (Textron) (type certificate previously held by Cessna Aircraft Company) Models 180, 180A, 180B, 180C, 180D, 180E, 180F, 180G, 180H, 180J, 180K, 182, 182A, 182B, 182C, 182D, 185, 185A, 185B, 185C, 185D, 185E, A185E, and A185F airplanes. The NPRM published in the **Federal Register** on May 14, 2020 (85 FR 28890). The NPRM was prompted by a report of cracks found in the tailcone and horizontal stabilizer attachment structure on a Textron Model 185 airplane. The FAA discovered similar conditions on 29 additional Textron 180 and 185 series airplanes and determined that the combination of the attachment structure design and high loads during landing contribute to the development of cracks in the tailcone and horizontal stabilizer attachment structure. The NPRM proposed to require inspecting the tailcone and horizontal stabilizer for corrosion, cracks, and loose or sheared rivets and repairing or replacing damaged parts as necessary. The FAA is issuing this AD to prevent failure of the horizontal stabilizer to tailcone attachment, which could lead to tail separation with consequent loss of control of the airplane.

Comments

The FAA gave the public the opportunity to participate in developing

this final rule. The following presents the comments received on the NPRM and the FAA's response to each comment.

Support for the NPRM

Two individual commenters supported the NPRM.

Request To Clarify Why the AD Is Necessary

Three individual commenters requested the FAA clarify why an AD is necessary. The commenters stated the proposed inspection is already performed at every annual inspection. One of these commenters stated the current service bulletin is also sufficient to address this issue, and unlike the seat rail AD, which was necessary to remove subjective interpretation from the inspection measurements, this issue is more objective. The FAA infers that the commenter is referring to AD 2011–10–09, Amendment 39–16690 (76 FR 27865, May 13, 2011).

The FAA disagrees. Although 14 CFR 43.15 and Appendix D to Part 43 do require that 100-hour and annual inspections include an inspection of the tailcone and horizontal stabilizer attachment structure, this AD requires an inspection directed towards specific areas with a history of cracking. Data obtained during evaluation of this unsafe condition indicated that the current routine maintenance and inspection procedures alone are not adequate to address it. Also, while an operator may incorporate into its maintenance program the inspections in the service bulletin referenced by the commenters, not all operators are required to do so. In order for these inspections to become mandatory, and to correct the unsafe conditions identified in the NPRM, the FAA must issue an AD. The compliance times as proposed should allow the inspections to be completed during the annual/100 hour inspection, thereby minimizing the costs on operators.

The FAA did not make any changes to the proposed AD based on these comments.

Request To Address Cause of the Cracking

An individual commenter requested the AD address the cause of the cracking instead of changing the affected parts so that the cycle time between inspections could be increased. As examples, the commenter stated that if the cause is vibration, then propeller balance should be required to correct the vibration; if the cause is corrosion, then corrosion prevention should be required.

The FAA disagrees. The FAA determined that a combination of the attachment structure design and the high design loads during landing contribute to the development of cracks in the tailcone and horizontal stabilizer attachment structure. The FAA evaluated the failures and determined that the appropriate corrective action was to replace the parts if corrosion or cracks are detected during the inspection. The FAA did not make any changes to the proposed AD based on this comment.

Request Change to Applicability

The Aircraft Owners and Pilots Association (AOPA) requested the FAA clarify why the proposed AD applies to Model 182-series airplanes, because the airplanes found with cracking and corrosion damage were Textron Model 180- and 185-series airplanes that have a different landing gear configuration with higher loads during landing. Citing the same or similar reasons, three individual commenters requested that the proposed AD not apply to Model 182-series airplanes.

The FAA agrees to provide additional information explaining why the proposed AD would apply to Model 182-series airplanes. While the landing stresses for the Model 182-series are not equal to that of the Model 180- and 185-series, the FAA determined that the development of cracks in the tailcone and horizontal stabilizer attachment structure is a combination of landing stresses and the attachment structure design. Models 182 through 182D airplanes have the same tailcone design as Model 185-series airplanes. After the FAA issued an Airworthiness Concern Sheet about this issue on February 8, 2017, requesting information on Model 180- and 185-series airplanes, Textron released Single Engine Mandatory Service Letter SEL–55–01, dated December 7, 2017 (SEL–55–01), which included Models 182 through 182D. Inspection results from SEL–55–01 have included multiple reports of cracking on Models 182 through 182D.

The FAA did not make any changes to the proposed AD based on these comments.

Another individual commenter requested the proposed AD require inspections for Model 182-series airplanes that have been converted to tail wheel airplanes and not require inspections for Model 180- and 185-series airplanes on floats, if the cause is vibration from landings.

The FAA disagrees. The FAA has determined that the development of cracks in the tailcone and horizontal stabilizer attachment structure is a combination of the attachment structure design and high landing loads. The high loads encountered during landing are not specifically the result of vibration. Data obtained during evaluation of the unsafe condition identified cracking on aircraft with and without floats.

The FAA did not make any changes to the proposed AD based on this comment.

The same individual commenter also requested the proposed AD not apply to lower time airplanes, such as those with 3,000 hours or less. The commenter did not provide justification for this request.

The FAA disagrees. This AD was proposed to address corrosion and cracks in the tailcone and horizontal stabilizer attachment structure. As corrosion may develop over time, regardless of how many flight hours the airplane accumulates, the commenter's suggestion, if adopted, would not adequately address the unsafe condition.

The FAA did not make any changes to the proposed AD based on this comment.

Request for Credit for Previous Actions

AOPA and two individual commenters requested the FAA revise paragraph (h) of the AD to allow credit for previous actions performed by using SEL–55–01 if the airplane was also inspected for loose or sheared rivets. The commenters suggested there are no significant differences between SEL–55–01 and the proposed AD. AOPA also requested credit for actions performed during the prior annual inspection.

The FAA agrees that operators may take credit for previous compliance with SEL–55–01; however, a change to the AD is unnecessary. Paragraph (f) of this AD requires compliance unless already done. Thus, the AD already allows credit for the initial inspection specified in SEL–55–01 if completed before the effective date of the AD. Similarly, operators may take credit for actions performed during the prior annual inspection if those actions are identical to the procedures specified in SEL–55–01.

The FAA did not make any changes to the proposed AD based on these comments.

Request To Delay Issuance of AD

An anonymous commenter requested the FAA delay issuing the AD to allow more research into the problem and solutions. The commenter stated that the AD is too invasive and that removing and replacing the tail every 500 hours could be far more dangerous to the airplane than the cracks.

The FAA disagrees. The AD does not require removing the tail in order to complete the visual inspection. SEL–55–01 provides instructions to gain access to the inspection area without removal of the tail. The FAA has received feedback from operators that this inspection has been completed during annual maintenance. No delay in the effective date of the AD is warranted.

The FAA did not make any changes to the proposed AD based on this comment.

Comment Concerning Potential Causes of Damage

AOPA requested the FAA clarify whether all causes of potential damage have been scrutinized. AOPA suggested that other sources of damage to the tailcone and horizontal stabilizer area attachment structure, such as wear from ground personnel moving the aircraft by the horizontal stabilizer, may have resulted in the cracking and corrosion discovered.

The FAA agrees to provide additional information. Damage to the tailcone and horizontal stabilizer could be a result of ground personnel moving the aircraft by the horizontal stabilizer. In addition, high loads due to a number of potential causes in combination with the attachment structure design could result in damage to the tailcone and horizontal stabilizer. However, even if the FAA could identify the exact sources of high loads, it would not likely alter the actions required by the AD to correct the identified unsafe condition.

The FAA did not make any changes to the proposed AD based on this comment.

Comment Concerning Parts

An anonymous commenter stated that parts to repair are not available. The commenter did not provide supporting data with this comment.

The FAA is not aware of the unavailability of replacement parts. To the extent operators may have difficulty obtaining replacement parts, the FAA cannot base its AD action on whether spare parts are available or can be produced. While every effort is made to avoid grounding aircraft, the FAA must address the identified unsafe condition.

The FAA did not make any changes to the proposed AD based on this comment.

Request Regarding Costs

One individual commenter requested the FAA require that Textron provide a service kit that addresses the design flaw and assists with the costs mandated by the AD. The commenter stated that this AD focuses on a known vulnerable area in all tail wheeled Cessna aircraft, caused by a systemic design flaw that is a major safety of flight condition.

The FAA, as a federal agency, is responsible for all directives, policies, and mandates issued under its authority. The FAA does not have the authority to require a manufacturer to bear AD costs incurred in modifying or repairing privately-owned aircraft. The general obligation of the operator to maintain its aircraft in an airworthy condition is vital, but sometimes expensive. If the manufacturer determines it will cover the cost of implementing a particular action, then the manufacturer does so voluntarily. The FAA did not make any changes to the proposed AD based on this comment.

Comment Regarding the Service Information

An individual commenter stated the proposed AD does not reference or coincide with Cessna Supplemental Inspection Document 53–10–01, which covers the tailcone inspection.

The commenter's statement does not include a suggestion specific to the AD or a request the FAA can act on. The FAA did not make any changes to the proposed AD based on this comment.

Conclusion

The FAA reviewed the relevant data, considered the comments received, and determined that air safety and the public interest require adopting this final rule as proposed.

Related Service Information Under 1 CFR Part 51

The FAA reviewed Textron Aviation Single Engine Mandatory Service Letter SEL–55–01, dated December 7, 2017. The service information contains procedures for inspecting the stabilizer hinge brackets, tailcone reinforcement angles, corner reinforcements, stabilizer hinge reinforcement channel, stabilizer hinge assemblies, stabilizer aft spar reinforcement, and the lower half of the stabilizer aft spar from station (STA) 16 on the left side of the stabilizer aft spar to STA 16 on the right side for cracks and corrosion. This service information is reasonably available because the interested parties have access to it through their normal course of business or by the means identified in the **ADDRESSES** section.

Differences Between This AD and the Service Information

The service information applies to airplanes with more than 3,000 total hours time-in-service or 10 years in service, while this AD applies regardless of the airplane's time-in-service. This AD requires inspecting for and replacing loose or sheared rivets, which is not specified in the service information.

Costs of Compliance

The FAA estimates that this AD affects 6,586 airplanes of U.S. registry.

The FAA estimates the following costs to comply with this AD:

ESTIMATED COSTS

Action	Labor cost	Parts cost	Cost per product	Cost on U.S. operators
Inspection	2 work-hours × $85 per hour = $170	Not applicable	$170	$1,119,620

The FAA estimates the following costs to do any necessary replacements that would be required based on the results of the inspection. The FAA has no way of determining the number of aircraft that might need these actions:

ON-CONDITION COSTS

Action	Labor cost	Parts cost	Cost per product
Replace left-hand (LH) stabilizer hinge bracket	4 work-hours × $85 per workhour = $340	$551	$891
Replace right-hand (RH) stabilizer hinge bracket	4 work-hours × $85 per workhour = $340	530	870

ON-CONDITION COSTS—Continued

Action	Labor cost	Parts cost	Cost per product
Replace LH tailcone reinforcement angle	12 work-hours × $85 per workhour = $1,020	2,291	3,311
Replace RH tailcone reinforcement angle	12 work-hours × $85 per workhour = $1,020	3,006	4,026
Replace LH corner reinforcement	6 work-hours × $85 per workhour = $510	169	679
Replace RH corner reinforcement	6 work-hours × $85 per workhour = $510	390	900
Replace LH stabilizer hinge reinforcement channel	6 work-hours × $85 per workhour = $510	99	609
Replace RH stabilizer hinge reinforcement channel	6 work-hours × $85 per workhour = $510	99	609
Replace LH stabilizer hinge assembly	1 work-hours × $85 per workhour = $85	570	655
Replace RH stabilizer hinge assembly	1 work-hours × $85 per workhour = $85	694	779
Replace LH stabilizer aft spar reinforcement	(*)	825	825
Replace RH stabilizer aft spar reinforcement	(*)	466	466
Replace stabilizer aft spar (* includes work-hour cost for replacing stabilizer aft spar reinforcement parts).	28* work-hours × $85 per workhour = $2,380	563	2,943
Remove and replace horizontal and vertical stabilizers and rig flight controls.	8 work-hours × $85 per workhour = $680	Not applicable	680

Since corrosion may affect any or all of the parts subject to the inspection in this AD differently and the severity of the corrosion on each part would affect the time necessary to correct the condition, the FAA has no way to determine an overall cost per product for removing the corrosion. Similarly, loose or sheared rivets may also affect any or all of the parts subject to the inspection in this AD differently, and the time necessary to correct the condition on each product would be different. Therefore, the FAA has no way to determine an overall cost per product for replacing loose or sheared rivets.

Authority for This Rulemaking

Title 49 of the United States Code specifies the FAA's authority to issue rules on aviation safety. Subtitle I, section 106, describes the authority of the FAA Administrator. Subtitle VII: Aviation Programs, describes in more detail the scope of the Agency's authority.

The FAA is issuing this rulemaking under the authority described in Subtitle VII, Part A, Subpart III, Section 44701: General requirements. Under that section, Congress charges the FAA with promoting safe flight of civil aircraft in air commerce by prescribing regulations for practices, methods, and procedures the Administrator finds necessary for safety in air commerce. This regulation is within the scope of that authority because it addresses an unsafe condition that is likely to exist or develop on products identified in this rulemaking action.

Regulatory Findings

This AD will not have federalism implications under Executive Order 13132. This AD will not have a substantial direct effect on the States, on the relationship between the national government and the States, or on the distribution of power and responsibilities among the various levels of government.

For the reasons discussed above, I certify that this AD:

(1) Is not a ''significant regulatory action'' under Executive Order 12866,

(2) Will not affect intrastate aviation in Alaska, and

(3) Will not have a significant economic impact, positive or negative, on a substantial number of small entities under the criteria of the Regulatory Flexibility Act.

List of Subjects in 14 CFR Part 39

Air transportation, Aircraft, Aviation safety, Incorporation by reference, Safety.

Adoption of the Amendment

Accordingly, under the authority delegated to me by the Administrator, the FAA amends 14 CFR part 39 as follows:

PART 39—AIRWORTHINESS DIRECTIVES

■ 1. The authority citation for part 39 continues to read as follows:

Authority: 49 U.S.C. 106(g), 40113, 44701.

§ 39.13 [Amended]

■ 2. The FAA amends § 39.13 by adding the following new airworthiness directive:

2020–21–22 Textron Aviation Inc.: Amendment 39–21295; Docket No. FAA–2020–0472; Project Identifier 2018–CE–060–AD.

(a) Effective Date

This airworthiness directive (AD) is effective December 7, 2020.

(b) Affected ADs

None.

(c) Applicability

This AD applies to Textron Aviation Inc. (type certificate previously held by Cessna Aircraft Company) Models 180, 180A, 180B, 180C, 180D, 180E, 180F, 180G, 180H, 180J, 180K, 182, 182A, 182B, 182C, 182D, 185, 185A, 185B, 185C, 185D, 185E, A185E, and A185F airplanes, all serial numbers, certificated in any category.

(d) Subject

Joint Aircraft System Component (JASC)/ Air Transport Association (ATA) of America Code 53, Fuselage; 55, Stabilizers.

(e) Unsafe Condition

This AD was prompted by a report of cracks found in the tailcone and horizontal stabilizer attachment structure. The FAA is issuing this AD to detect and correct corrosion and cracks in the tailcone and horizontal stabilizer attachment structure. The unsafe condition, if not addressed, could result in failure of the horizontal stabilizer to tailcone attachment, which could lead to tail separation with consequent loss of control of the airplane.

(f) Compliance

Comply with this AD within the compliance times specified, unless already done.

(g) Inspect, Repair, and Replace

Within the next 100 hours time-in-service (TIS) after the effective date of this AD or within the next 12 months after the effective date of this AD, whichever occurs later, and thereafter every 500 hours TIS or 5 years, whichever occurs first, visually inspect each stabilizer hinge bracket, tailcone reinforcement angle, corner reinforcement, stabilizer hinge reinforcement channel, stabilizer hinge assembly, stabilizer aft spar reinforcement, and the lower half of the stabilizer aft spar from station (STA) 16 on the left side to STA 16 on the right side for corrosion and cracks; remove any corrosion; and replace any part with a crack by following the Accomplishment Instructions, paragraphs 9 through 11 and 13, of Textron Aviation Single Engine Mandatory Service Letter SEL–55–01, dated December 7, 2017. Also inspect for loose rivets and sheared

rivets. If there is a loose or sheared rivet, before further flight, replace the rivet.

(h) Credit for Previous Actions

Actions accomplished before the effective date of this AD within the previous 5 years or 500 hours TIS, whichever was the most recent, in accordance with the procedures specified in the documents listed in paragraphs (h)(i) through (viii) of this AD as applicable to your airplane are considered acceptable for compliance with the corresponding actions in paragraph (g) of this AD. The time between any inspection for which credit is allowed by this paragraph and the next inspection accomplished in accordance with paragraph (g) of this AD must not exceed 500 hours TIS or 5 years, whichever occurs first.

(i) Cessna Aircraft Company Model 100 Series (1953–1962) Service Manual, Supplemental Inspection Number: 53–10–01, D138–1–13 Temporary Revision Number 8, dated May 18, 2015.

(ii) Cessna Aircraft Company Model 100 Series (1963–1968) Service Manual, Supplemental Inspection Number: 53–10–01, D637–1–13 Temporary Revision Number 10, dated May 18, 2015;

(iii) Cessna Aircraft Company Model 180/185 Series (1969–1980) Service Manual, Supplemental Inspection Number: 53–10–01, D2000–9–13 Temporary Revision Number 9, dated May 18, 2015.

(iv) Cessna Aircraft Company Model 180/185 Series (1981–1985) Service Manual, Supplemental Inspection Number: 53–10–01, D2067–1TR9 Temporary Revision Number 9, dated May 1, 2016.

(v) Cessna Aircraft Company Model 100 Series (1953–1962) Service Manual, Supplemental Inspection Number: 55–10–01, D138–1–13 Temporary Revision Number 7, dated December 1, 2011.

(vi) Cessna Aircraft Company Model 100 Series (1963–1968) Service Manual, Supplemental Inspection Number: 55–10–01, D637–1–13 Temporary Revision Number 9, dated December 1, 2011.

(vii) Cessna Aircraft Company Model 180/185 Series (1969–1980) Service Manual, Supplemental Inspection Number: 55–10–01, D2000–9–13 Temporary Revision Number 7, dated December 1, 2011.

(viii) Cessna Aircraft Company Model 180/185 Series (1981–1985) Service Manual, Supplemental Inspection Number: 55–10–01, D2067–1–13 Temporary Revision Number 7, dated December 1, 2011.

(i) Alternative Methods of Compliance (AMOCs)

(1) The Manager, Wichita ACO Branch, FAA, has the authority to approve AMOCs for this AD, if requested using the procedures found in 14 CFR 39.19. In accordance with 14 CFR 39.19, send your request to your principal inspector or local Flight Standards District Office, as appropriate. If sending information directly to the manager of the certification office, send it to the attention of the person identified in paragraph (j) of this AD.

(2) Before using any approved AMOC, notify your appropriate principal inspector, or lacking a principal inspector, the manager of the local flight standards district office/certificate holding district office.

(j) Related Information

For more information about this AD, contact Tara Shawn, Aerospace Engineer, Wichita ACO Branch, 1801 Airport Road, Room 100, Wichita, Kansas 67209; telephone: (316) 946–4141; fax: (316) 946–4107; email: *tara.shawn@faa.gov* or *Wichita-COS@faa.gov.*

(k) Material Incorporated by Reference

(1) The Director of the Federal Register approved the incorporation by reference (IBR) of the service information listed in this paragraph under 5 U.S.C. 552(a) and 1 CFR part 51.

(2) You must use this service information as applicable to do the actions required by this AD, unless the AD specifies otherwise.

(i) Textron Aviation Single Engine Mandatory Service Letter SEL–55–01, dated December 7, 2017.

(ii) [Reserved]

(3) For Textron Aviation service information identified in this AD, contact Textron Aviation Customer Service, P.O. Box 7706, Wichita, Kansas 67277, (316) 517–5800; *customercare@txtav.com;* internet: *https://txtav.com.*

(4) You may view this service information at FAA, Airworthiness Products Section, Operational Safety Branch, 901 Locust, Kansas City, Missouri 64106. For information on the availability of this material at the FAA, call (816) 329–4148.

(5) You may view this service information that is incorporated by reference at the National Archives and Records Administration (NARA). For information on the availability of this material at NARA, email: *fedreg.legal@nara.gov,* or go to: *https://www.archives.gov/federal-register/cfr/ibr-locations.html.*

Issued on October 8, 2020.

Lance T. Gant,

Director, Compliance & Airworthiness Division, Aircraft Certification Service.

[FR Doc. 2020–24046 Filed 10–30–20; 8:45 am]

BILLING CODE 4910–13–P

DEPARTMENT OF TRANSPORTATION

Federal Aviation Administration

14 CFR Part 39

[Docket No. FAA–2020–0746; Project Identifier 2019–CE–012–AD; Amendment 39–21301; AD 2020–22–05]

RIN 2120–AA64

Airworthiness Directives; Pilatus Aircraft Ltd. Airplanes

AGENCY: Federal Aviation Administration (FAA), DOT.

ACTION: Final rule.

SUMMARY: The FAA is adopting a new airworthiness directive (AD) for Pilatus Aircraft Ltd. Model PC–12/47E airplanes. This AD was results from mandatory continuing airworthiness information (MCAI) originated by an aviation authority of another country to identify and correct an unsafe condition on an aviation product. The MCAI describes the unsafe condition as seizing of a main landing gear (MLG) spring pack assembly. This AD requires replacement of affected parts and prohibits (re)installation of affected parts. The FAA is issuing this AD to address the unsafe condition on these products.

DATES: This AD is effective December 7, 2020.

The Director of the Federal Register approved the incorporation by reference of a certain publication listed in this AD as of December 7, 2020.

ADDRESSES: For service information identified in this final rule, contact Pilatus Aircraft Ltd., Customer Technical Support (MCC), P.O. Box 992, CH–6371 Stans, Switzerland; telephone: +41 (0)41 619 67 74; fax: +41 (0)41 619 67 73; email: *Techsupport@pilatus-aircraft.com;* internet: *https://www.pilatus-aircraft.com/en.* You may view this service information at the FAA, Airworthiness Products Section, Operational Safety Branch, 901 Locust, Kansas City, Missouri 64106. For information on the availability of this material at the FAA, call (816) 329–4148. It is also available on the internet at *https://www.regulations.gov* by searching for and locating Docket No. FAA–2020–0746.

Examining the AD Docket

You may examine the AD docket on the internet at *https://www.regulations.gov* by searching for and locating Docket No. FAA–2020–0746; or in person at Docket Operations between 9 a.m. and 5 p.m., Monday through Friday, except Federal holidays. The AD docket contains this final rule, the MCAI, any comments received, and other information. The address for Docket Operations is U.S. Department of Transportation, Docket Operations, M–30, West Building Ground Floor, Room W12–140, 1200 New Jersey Avenue SE, Washington, DC 20590.

FOR FURTHER INFORMATION CONTACT: Doug Rudolph, Aerospace Engineer, FAA, General Aviation & Rotorcraft Section, International Validation Branch, 901 Locust, Room 301, Kansas City, Missouri 64106; telephone: (816) 329–4059; fax: (816) 329–4090; email: *doug.rudolph@faa.gov.*

SUPPLEMENTARY INFORMATION:

Discussion

The FAA issued a notice of proposed rulemaking (NPRM) to amend 14 CFR

part 39 by adding an AD that would apply to certain serial-numbered Pilatus Aircraft Ltd. Model PC–12/47E airplanes with an MLG spring pack assembly part number (P/N) 532.34.12.101 installed. The NPRM published in the **Federal Register** on August 6, 2020 (85 FR 47712). The NPRM proposed to require removing MLG spring pack assembly P/N 532.34.12.101 from service and replacing it with MLG spring pack assembly P/N 532.34.12.120 and was based on MCAI originated by the European Union Aviation Safety Agency (EASA), which is the Technical Agent for the Member States of the European Community. EASA issued AD No. 2019–0032, dated February 15, 2019 (referred to after this as ''the MCAI''), to correct the unsafe condition on these products. The MCAI states:

> An occurrence was reported of an unlocked main landing gear (MLG) during landing of a PC–12/47E, equipped with electro-mechanical landing gear. Subsequent investigation identified that the aeroplane was equipped with an affected part [spring pack assemblies having P/N 532.34.12.101], which had completely seized. Serviceable parts [spring pack assemblies having P/N 532.34.12.120] have a special surface treatment on the inner and outer tube, which would have prevented the seizure.
>
> This condition, if not corrected, could lead to failure of an MLG spring pack assembly, possibly resulting in inability to safely extend the MLG and consequent loss of control of the aeroplane after landing.
>
> To address this potential unsafe condition, Pilatus issued the [service bulletin] SB to provide inspection and modification instructions.
>
> For the reason described above, this [EASA] AD requires replacement of affected parts with serviceable parts, and prohibits (re)installation of affected parts.

Forty-two airplanes were built that may have this version of the spring pack assembly installed. An improved spring pack assembly with a hard chrome plated inner tube was introduced in 2014. You may examine the MCAI on the internet at *https://www.regulations.gov* by searching for and locating Docket No. FAA–2020–0746.

Comments

The FAA gave the public the opportunity to participate in developing this final rule. The FAA received no comments on the NPRM or on the determination of the cost to the public.

Conclusion

The FAA reviewed the relevant data and determined that air safety and the public interest require adopting this final rule as proposed.

Related Service Information Under 1 CFR Part 51

The FAA reviewed Pilatus Aircraft Ltd. PC–12 Service Bulletin No. 32–027, dated January 7, 2019. The service information contains procedures for inspecting the MLG spring pack assembly to determine the part number, removing and discarding any affected spring pack assemblies, and installing the improved design spring pack assemblies. This service information is reasonably available because the interested parties have access to it through their normal course of business or by the means identified in the **ADDRESSES** section.

Costs of Compliance

The FAA estimates that this AD will affect 29 products of U.S. registry. The FAA also estimates that it would take about 3 work-hours per product to comply with the replacement requirements of this AD. The average labor rate is $85 per work-hour. Required parts would cost about $5,000 per product.

Based on these figures, the FAA estimates the cost of this AD on U.S. operators to be $152,395, or $5,255 per product.

According to the manufacturer, some of the costs of this AD may be covered under warranty, thereby reducing the cost impact on affected individuals. The FAA does not control warranty coverage for affected individuals. As a result, the FAA has included all costs in this cost estimate.

Authority for This Rulemaking

Title 49 of the United States Code specifies the FAA's authority to issue rules on aviation safety. Subtitle I, section 106, describes the authority of the FAA Administrator. Subtitle VII: Aviation Programs, describes in more detail the scope of the Agency's authority.

The FAA is issuing this rulemaking under the authority described in Subtitle VII, Part A, Subpart III, Section 44701: General requirements. Under that section, Congress charges the FAA with promoting safe flight of civil aircraft in air commerce by prescribing regulations for practices, methods, and procedures the Administrator finds necessary for safety in air commerce. This regulation is within the scope of that authority because it addresses an unsafe condition that is likely to exist or develop on products identified in this rulemaking action.

Regulatory Findings

This AD will not have federalism implications under Executive Order 13132. This AD will not have a substantial direct effect on the States, on the relationship between the national government and the States, or on the distribution of power and responsibilities among the various levels of government.

For the reasons discussed above, I certify this AD:

(1) Is not a ''significant regulatory action'' under Executive Order 12866,

(2) Will not affect intrastate aviation in Alaska, and

(3) Will not have a significant economic impact, positive or negative, on a substantial number of small entities under the criteria of the Regulatory Flexibility Act.

List of Subjects in 14 CFR Part 39

Air transportation, Aircraft, Aviation safety, Incorporation by reference, Safety.

Adoption of the Amendment

Accordingly, under the authority delegated to me by the Administrator, the FAA amends 14 CFR part 39 as follows:

PART 39—AIRWORTHINESS DIRECTIVES

■ 1. The authority citation for part 39 continues to read as follows:

Authority: 49 U.S.C. 106(g), 40113, 44701.

§ 39.13 [Amended]

■ 2. The FAA amends § 39.13 by adding the following new airworthiness directive:

2020–22–05 Pilatus Aircraft Ltd.: Amendment 39–21301; Docket No. FAA–2020–0746; Project Identifier 2019–CE–012–AD.

(a) Effective Date

This airworthiness directive (AD) is effective December 7, 2020.

(b) Affected ADs

None.

(c) Applicability

This AD applies to Pilatus Aircraft Ltd. Model PC–12/47E airplanes, serial numbers 1300 and 1451 through 1944 (except serial number 1720), certificated in any category, with a main landing gear (MLG) spring pack assembly part number (P/N) 532.34.12.101 installed.

(d) Subject

Air Transport Association of America (ATA) Code 32: Landing Gear.

(e) Reason

This AD was prompted by mandatory continuing airworthiness information (MCAI) originated by an aviation authority of another country to identify and correct an unsafe condition on an aviation product. The MCAI

describes the unsafe condition as seizing of an MLG spring pack assembly. The FAA is issuing this AD to prevent failure of the MLG spring pack assembly, which could result in the inability to extend the MLG with consequent loss of control of the airplane after landing.

(f) Actions and Compliance

(1) Within 2 months after the effective date of this AD, remove from service MLG spring pack assembly P/N 532.34.12.101 and install MLG spring pack assembly P/N 532.34.12.120 by following the Accomplishment Instructions-Part A-Aircraft, section 3.B., in Pilatus PC–12 Service Bulletin No. 32–027, dated January 7, 2019.

(2) As of the effective date of this AD, do not install an MLG spring pack assembly P/N 532.34.12.101 on any airplane.

(g) Alternative Methods of Compliance (AMOCs)

The Manager, International Validation Branch, FAA, has the authority to approve AMOCs for this AD, if requested using the procedures found in 14 CFR 39.19. Send information to Doug Rudolph, Aerospace Engineer, FAA, General Aviation & Rotorcraft Section, International Validation Branch, 901 Locust, Room 301, Kansas City, Missouri 64106; telephone: (816) 329–4059; fax: (816) 329–4090; email: *doug.rudolph@faa.gov.* Before using any approved AMOC, notify your appropriate principal inspector (PI), or lacking a PI, your local Flight Standards District Office.

(h) Related Information

Refer to European Union Aviation Safety (EASA) Agency AD No. 2019–0032, dated February 15, 2019, for more information. You may examine the EASA AD in the AD docket on the internet at *https://www.regulations.gov* by searching for and locating Docket No. FAA–2020–0746.

(i) Material Incorporated by Reference

(1) The Director of the Federal Register approved the incorporation by reference (IBR) of the service information listed in this paragraph under 5 U.S.C. 552(a) and 1 CFR part 51.

(2) You must use this service information as applicable to do the actions required by this AD, unless the AD specifies otherwise.

(i) Pilatus PC–12 Service Bulletin No. 32–027, dated January 7, 2019.

(ii) [Reserved]

(3) For Pilatus Aircraft Ltd. service information identified in this AD, contact Pilatus Aircraft Ltd., Customer Technical Support (MCC), P.O. Box 992, CH–6371 Stans, Switzerland; telephone: +41 (0)41 619 67 74; fax: +41 (0)41 619 67 73; email: *Techsupport@pilatus-aircraft.com;* internet: *https://www.pilatus-aircraft.com/en.*

(4) You may view this service information at the FAA, Airworthiness Products Section, Operational Safety Branch, 901 Locust, Kansas City, Missouri 64106. For information on the availability of this material at the FAA, call (816) 329–4148.

(5) You may view this service information that is incorporated by reference at the National Archives and Records Administration (NARA). For information on the availability of this material at NARA, email: *fedreg.legal@nara.gov,* or go to: *https://www.archives.gov/federal-register/cfr/ibr-locations.html.*

Issued on October 14, 2020.

Lance T. Gant,

Director, Compliance & Airworthiness Division, Aircraft Certification Service.

[FR Doc. 2020–24048 Filed 10–30–20; 8:45 am]

BILLING CODE 4910–13–P

DEPARTMENT OF TRANSPORTATION

Federal Aviation Administration

14 CFR Part 39

[Docket No. FAA–2020–0745; Project Identifier 2019–CE–030–AD; Amendment 39–21296; AD 2020–21–23]

RIN 2120–AA64

Airworthiness Directives; Pilatus Aircraft Ltd. Airplanes

AGENCY: Federal Aviation Administration (FAA), DOT.

ACTION: Final rule.

SUMMARY: The FAA is adopting a new airworthiness directive (AD) for Pilatus Aircraft Ltd. Models PC–12, PC–12/45, PC–12/47, and PC–12/47E airplanes. This AD was prompted by mandatory continuing airworthiness information (MCAI) issued by the aviation authority of another country to identify and correct an unsafe condition on an aviation product. The MCAI describes the unsafe condition as improperly manufactured horizontal stabilizer rear attachment bolts. If not corrected, this could lead to fatigue failure of the bolts and loss of airplane control. The FAA is issuing this AD to address the unsafe condition on these products.

DATES: This AD is effective December 7, 2020.

The Director of the Federal Register approved the incorporation by reference of a certain publication listed in this AD as of December 7, 2020.

ADDRESSES: For service information identified in this final rule, contact Pilatus Aircraft Ltd., Customer Technical Support (MCC), P.O. Box 992, CH–6371 Stans, Switzerland; telephone: +41 (0)41 619 67 74; fax: +41 (0)41 619 67 73; email: *Techsupport@pilatus-aircraft.com;* internet: *https://www.pilatus-aircraft.com.* You may view this service information at the FAA, Airworthiness Products Section, Operational Safety Branch, 901 Locust, Kansas City, Missouri 64106. For information on the availability of this material at the FAA, call (816) 329–4148. It is also available on the internet at *https://www.regulations.gov* by searching for and locating Docket No. FAA–2020–0745.

Examining the AD Docket

You may examine the AD docket on the internet at *https://www.regulations.gov* by searching for and locating Docket No. FAA–2020–0745; or in person at Docket Operations between 9 a.m. and 5 p.m., Monday through Friday, except Federal holidays. The AD docket contains this final rule, the MCAI, any comments received, and other information. The address for Docket Operations is U.S. Department of Transportation, Docket Operations, M–30, West Building Ground Floor, Room W12–140, 1200 New Jersey Avenue SE, Washington, DC 20590.

FOR FURTHER INFORMATION CONTACT: Doug Rudolph, Aerospace Engineer, General Aviation & Rotorcraft Section, International Validation Branch, 901 Locust, Room 301, Kansas City, Missouri 64106; phone: (816) 329–4059; fax: (816) 329–4090; email: *doug.rudolph@faa.gov.*

SUPPLEMENTARY INFORMATION:

Discussion

The FAA issued a notice of proposed rulemaking (NPRM) to amend 14 CFR part 39 by adding an AD that would apply to Pilatus Aircraft Ltd. Models PC–12, PC–12/45, PC–12/47, and PC–12/47E airplanes with a certain horizontal stabilizer rear attachment bolt installed. The NPRM published in the **Federal Register** on August 6, 2020 (85 FR 47716). The NPRM proposed to require replacing the horizontal stabilizer rear attachment bolts and was prompted by MCAI originated by the European Union Aviation Safety Agency (EASA), which is the Technical Agent for the Member States of the European Community. EASA issued AD No. 2019–0129, dated June 6, 2019 (referred to after this as ''the MCAI''), to correct the unsafe condition on these products. The MCAI states:

> On the final assembly line, horizontal stabilizer rear attachment bolts were detected that had not received correct heat treatment. Subsequent investigation determined that certain parts, identified by FAUF, were improperly manufactured and consequently have reduced material properties.
>
> This condition, if not corrected, could lead to a fatigue failure of an affected part, possibly resulting in loss of control of the aeroplane.
>
> To address this potential unsafe condition, Pilatus issued the [service bulletin] SB to provide inspection and replacement instructions.

For the reason described above, this [EASA] AD requires replacement of affected parts, and prohibits (re)installation thereof.

You may obtain further information by examining the MCAI in the AD docket on the internet at *https://www.regulations.gov* by searching for and locating Docket No. FAA–2020–0745.

Comments

The FAA gave the public the opportunity to participate in developing this final rule. The FAA has considered the comment received. An individual commenter supported the NPRM.

Conclusion

The FAA reviewed the relevant data and determined that air safety and the public interest require adopting this final rule as proposed.

Related Service Information Under 1 CFR Part 51

The FAA reviewed Pilatus Aircraft Ltd. PC–12 Service Bulletin No. 55–004, dated March 29, 2019. The service information contains procedures for checking the rear attachment bolts for the horizontal stabilizer and replacing any defective bolts. This service information is reasonably available because the interested parties have access to it through their normal course of business or by the means identified in the **ADDRESSES** section.

Costs of Compliance

The FAA estimates that this AD will affect 14 products of U.S. registry. The average labor rate is $85 per work-hour.

The FAA estimates that the required actions will take 1.5 work-hours and require parts costing $5,000, for a cost of $5,127.50 per product and $71,785 for the U.S. operator fleet.

Authority for This Rulemaking

Title 49 of the United States Code specifies the FAA's authority to issue rules on aviation safety. Subtitle I, section 106, describes the authority of the FAA Administrator. Subtitle VII: Aviation Programs, describes in more detail the scope of the Agency's authority.

The FAA is issuing this rulemaking under the authority described in Subtitle VII, Part A, Subpart III, Section 44701: General requirements. Under that section, Congress charges the FAA with promoting safe flight of civil aircraft in air commerce by prescribing regulations for practices, methods, and procedures the Administrator finds necessary for safety in air commerce. This regulation is within the scope of that authority because it addresses an unsafe condition that is likely to exist or develop on products identified in this rulemaking action.

Regulatory Findings

This AD will not have federalism implications under Executive Order 13132. This AD will not have a substantial direct effect on the States, on the relationship between the national government and the States, or on the distribution of power and responsibilities among the various levels of government.

For the reasons discussed above, I certify this AD:

(1) Is not a ''significant regulatory action'' under Executive Order 12866,

(2) Will not affect intrastate aviation in Alaska, and

(3) Will not have a significant economic impact, positive or negative, on a substantial number of small entities under the criteria of the Regulatory Flexibility Act.

List of Subjects in 14 CFR Part 39

Air transportation, Aircraft, Aviation safety, Incorporation by reference, Safety.

Adoption of the Amendment

Accordingly, under the authority delegated to me by the Administrator, the FAA amends 14 CFR part 39 as follows:

PART 39—AIRWORTHINESS DIRECTIVES

■ 1. The authority citation for part 39 continues to read as follows:

Authority: 49 U.S.C. 106(g), 40113, 44701.

§ 39.13 [Amended]

■ 2. The FAA amends § 39.13 by adding the following new airworthiness directive:

2020–21–23 Pilatus Aircraft Ltd.: Amendment 39–21296; Docket No. FAA–2020–0745; Project Identifier 2019–CE–030–AD.

(a) Effective Date

This airworthiness directive (AD) is effective December 7, 2020.

(b) Affected ADs

None.

(c) Applicability

This AD applies to Pilatus Aircraft Ltd. Models PC–12, PC–12/45, PC–12/47, and PC–12/47E airplanes, all serial numbers, certificated in any category, with a horizontal stabilizer rear attachment bolt part number (P/N) 555.10.12.139 marked with production order number FAUF 10169753, FAUF 10171067, or FAUF 10171267 installed.

(d) Subject

Air Transport Association of America (ATA) Code 55: Stabilizers.

(e) Reason

This AD was prompted by a report of horizontal stabilizer rear attachment bolts that had not received correct heat treatment during the manufacturing process. The FAA is issuing this AD to prevent fatigue failure of a bolt and subsequent loss of airplane control.

(f) Actions and Compliance

(1) Within 1,350 hours time-in-service after the effective date of this AD or within 13 months after the effective date of this AD, whichever occurs first, replace each horizontal stabilizer rear attachment bolt P/N 555.10.12.139 marked with production order number FAUF 10169753, FAUF 10171067, or FAUF 10171267 by following the Accomplishment Instructions, section 3.B.(2) through (4) and figures 1 and 2, of Pilatus PC–12 Service Bulletin No. 55–004, dated March 29, 2019, except you are not required to return parts to the manufacturer.

(2) As of the effective date of this AD, do not install a horizontal stabilizer rear attachment bolt P/N 555.10.12.139 marked with production order number FAUF 10169753, FAUF 10171067, or FAUF 10171267 on any airplane.

(g) Alternative Methods of Compliance (AMOCs)

The Manager, International Validation Branch, FAA, has the authority to approve AMOCs for this AD, if requested using the procedures found in 14 CFR 39.19. Send information to ATTN: Doug Rudolph, Aerospace Engineer, FAA, General Aviation & Rotorcraft Section, International Validation Branch, 901 Locust, Room 301, Kansas City, Missouri 64106; telephone: (816) 329–4059; fax: (816) 329–4090; email: *doug.rudolph@faa.gov*. Before using any approved AMOC, notify your appropriate principal inspector (PI), or lacking a PI, your local Flight Standards District Office.

(h) Related Information

Refer to European Union Aviation Safety Agency (EASA) AD No. 2019–0129, dated June 6, 2019, for more information. You may examine the EASA AD in the AD docket on the internet at *https://www.regulations.gov* by searching for and locating Docket No. FAA–2020–0745.

(i) Material Incorporated by Reference

(1) The Director of the Federal Register approved the incorporation by reference (IBR) of the service information listed in this paragraph under 5 U.S.C. 552(a) and 1 CFR part 51.

(2) You must use this service information as applicable to do the actions required by this AD, unless the AD specifies otherwise.

(i) Pilatus Aircraft Ltd. PC–12 Service Bulletin No. 55–004, dated March 29, 2019.

(ii) [Reserved]

(3) For Pilatus Aircraft Ltd. service information identified in this AD, contact Pilatus Aircraft Ltd., Customer Technical Support (MCC), P.O. Box 992, CH–6371

Stans, Switzerland; telephone: +41 (0)41 619 67 74; fax: +41 (0)41 619 67 73; email: *Techsupport@pilatus-aircraft.com.*

(4) You may view this service information at the FAA, Airworthiness Products Section, Operational Safety Branch, 901 Locust, Kansas City, Missouri 64106. For information on the availability of this material at the FAA, call (816) 329–4148.

(5) You may view this service information that is incorporated by reference at the National Archives and Records Administration (NARA). For information on the availability of this material at NARA, email: *fedreg.legal@nara.gov,* or go to: *https://www.archives.gov/federal-register/cfr/ibr-locations.html.*

Issued on October 9, 2020.

Lance T. Gant,

Director, Compliance & Airworthiness Division, Aircraft Certification Service.

[FR Doc. 2020–24047 Filed 10–30–20; 8:45 am]

BILLING CODE 4910–13–P

DEPARTMENT OF TRANSPORTATION

Federal Aviation Administration

14 CFR Part 39

[Docket No. FAA–2020–0678; Product Identifier 2020–NM–098–AD; Amendment 39–21292; AD 2020–21–19]

RIN 2120–AA64

Airworthiness Directives; Dassault Aviation Airplanes

AGENCY: Federal Aviation Administration (FAA), Department of Transportation (DOT).

ACTION: Final rule.

SUMMARY: The FAA is superseding Airworthiness Directive (AD) 2019–24–11, which applied to certain Dassault Aviation Model FALCON 900EX airplanes. AD 2019–24–11 required revising the existing maintenance or inspection program, as applicable, to incorporate new or more restrictive airworthiness limitations. This AD continues to require those maintenance or inspection program revisions, and also requires revising the existing maintenance or inspection program, as applicable, to incorporate additional new or more restrictive airworthiness limitations; as specified in a European Union Aviation Safety Agency (EASA) AD, which is incorporated by reference. This AD was prompted by a determination that new or more restrictive airworthiness limitations are necessary. The FAA is issuing this AD to address the unsafe condition on these products.

DATES: This AD is effective December 7, 2020.

The Director of the Federal Register approved the incorporation by reference of a certain publication listed in this AD as of December 7, 2020.

The Director of the Federal Register approved the incorporation by reference of a certain other publication listed in this AD as of January 24, 2020 (84 FR 69997, December 20, 2019).

ADDRESSES: For the EASA material incorporated by reference (IBR) in this AD, contact the EASA, Konrad-Adenauer-Ufer 3, 50668 Cologne, Germany; telephone +49 221 8999 000; email *ADs@easa.europa.eu;* internet *www.easa.europa.eu.* You may find this IBR material on the EASA website at *https://ad.easa.europa.eu.*

For the Dassault service information identified in this AD, contact Dassault Falcon Jet Corporation, Teterboro Airport, P.O. Box 2000, South Hackensack, NJ 07606; telephone 201–440–6700; internet *https://www.dassaultfalcon.com.*

You may view this IBR material at the FAA, Airworthiness Products Section, Operational Safety Branch, 2200 South 216th St., Des Moines, WA. For information on the availability of this material at the FAA, call 206–231–3195. It is also available in the AD docket on the internet at *https://www.regulations.gov* by searching for and locating Docket No. FAA–2020–0678.

Examining the AD Docket

You may examine the AD docket on the internet at *https://www.regulations.gov* by searching for and locating Docket No. FAA–2020–0678; or in person at Docket Operations between 9 a.m. and 5 p.m., Monday through Friday, except Federal holidays. The AD docket contains this final rule, any comments received, and other information. The address for Docket Operations is U.S. Department of Transportation, Docket Operations, M–30, West Building Ground Floor, Room W12–140, 1200 New Jersey Avenue SE, Washington, DC 20590.

FOR FURTHER INFORMATION CONTACT: Tom Rodriguez, Aerospace Engineer, Large Aircraft Section, International Validation Branch, FAA, 2200 South 216th St., Des Moines, WA 98198; telephone and fax: 206–231–3226; email: *tom.rodriguez@faa.gov.*

SUPPLEMENTARY INFORMATION:

Discussion

The EASA, which is the Technical Agent for the Member States of the European Union, has issued EASA AD 2020–0116, dated May 20, 2020 (''EASA AD 2020–0116'') (also referred to as the Mandatory Continuing Airworthiness Information, or ''the MCAI''), to correct an unsafe condition for certain Dassault Aviation Model FALCON 900EX airplanes. EASA AD 2020–0116 superseded EASA AD 2019–0133 (which corresponds to FAA AD 2019–24–11, Amendment 39–19814 (84 FR 69997, December 20, 2019) (''AD 2019–24–11'')).

The FAA issued a notice of proposed rulemaking (NPRM) to amend 14 CFR part 39 to supersede AD 2019–24–11. AD 2019–24–11 applied to certain Dassault Aviation Model FALCON 900EX airplanes. The NPRM published in the **Federal Register** on August 3, 2020 (85 FR 46563). The NPRM was prompted by a determination that new or more restrictive airworthiness limitations are necessary. The NPRM proposed to continue to require the maintenance or inspection program revisions required by AD 2019–24–11, and also proposed to require revising the existing maintenance or inspection program, as applicable, to incorporate additional new or more restrictive airworthiness limitations, as specified in an EASA AD.

The FAA is issuing this AD to address reduced structural integrity of the airplane. See the MCAI for additional background information.

Comments

The FAA gave the public the opportunity to participate in developing this final rule. The FAA received no comments on the NPRM or on the determination of the cost to the public.

Conclusion

The FAA reviewed the relevant data and determined that air safety and the public interest require adopting this final rule as proposed, except for minor editorial changes. The FAA has determined that these minor changes:

- Are consistent with the intent that was proposed in the NPRM for addressing the unsafe condition; and
- Do not add any additional burden upon the public than was already proposed in the NPRM.

Related IBR Material Under 1 CFR Part 51

EASA AD 2020–0116 describes new or more restrictive maintenance tasks and airworthiness limitations.

This AD also requires Chapter 5–40, Airworthiness Limitations, Revision 16, dated September 2018, of the Dassault FALCON 900EX Maintenance Manual, which the Director of the Federal Register approved for incorporation by reference as of January 24, 2020 (84 FR 69997, December 20, 2019).

This material is reasonably available because the interested parties have access to it through their normal course of business or by the means identified in the **ADDRESSES** section.

Costs of Compliance

The FAA estimates that this AD affects 72 airplanes of U.S. registry. The FAA estimates the following costs to comply with this AD:

The FAA estimates the total cost per operator for the retained actions from AD 2019–24–11 to be $7,650 (90 work-hours × $85 per work-hour).

The FAA has determined that revising the maintenance or inspection program takes an average of 90 work-hours per operator, although the FAA recognizes that this number may vary from operator to operator. In the past, the FAA has estimated that this action takes 1 work-hour per airplane. Since operators incorporate maintenance or inspection program changes for their affected fleet(s), the FAA has determined that a per-operator estimate is more accurate than a per-airplane estimate. Therefore, the FAA estimates the total cost per operator for the new actions to be $7,650 (90 work-hours × $85 per work-hour).

Authority for This Rulemaking

Title 49 of the United States Code specifies the FAA's authority to issue rules on aviation safety. Subtitle I, section 106, describes the authority of the FAA Administrator. Subtitle VII: Aviation Programs, describes in more detail the scope of the Agency's authority.

The FAA is issuing this rulemaking under the authority described in Subtitle VII, Part A, Subpart III, Section 44701: General requirements. Under that section, Congress charges the FAA with promoting safe flight of civil aircraft in air commerce by prescribing regulations for practices, methods, and procedures the Administrator finds necessary for safety in air commerce. This regulation is within the scope of that authority because it addresses an unsafe condition that is likely to exist or develop on products identified in this rulemaking action.

Regulatory Findings

This AD will not have federalism implications under Executive Order 13132. This AD will not have a substantial direct effect on the States, on the relationship between the national government and the States, or on the distribution of power and responsibilities among the various levels of government.

For the reasons discussed above, I certify that this AD:

(1) Is not a ''significant regulatory action'' under Executive Order 12866,

(2) Will not affect intrastate aviation in Alaska, and

(3) Will not have a significant economic impact, positive or negative, on a substantial number of small entities under the criteria of the Regulatory Flexibility Act.

List of Subjects in 14 CFR Part 39

Air transportation, Aircraft, Aviation safety, Incorporation by reference, Safety.

Adoption of the Amendment

Accordingly, under the authority delegated to me by the Administrator, the FAA amends 14 CFR part 39 as follows:

PART 39—AIRWORTHINESS DIRECTIVES

■ 1. The authority citation for part 39 continues to read as follows:

Authority: 49 U.S.C. 106(g), 40113, 44701.

§ 39.13 [Amended]

■ 2. The FAA amends § 39.13 by:

■ a. Removing Airworthiness Directive (AD) 2019–24–11, Amendment 39–19814 (84 FR 69997, December 20, 2019), and

■ b. Adding the following new AD:

2020–21–19 Dassault Aviation: Amendment 39–21292; Docket No. FAA–2020–0678; Product Identifier 2020–NM–098–AD.

(a) Effective Date

This AD is effective December 7, 2020.

(b) Affected ADs

(1) This AD replaces AD 2019–24–11, Amendment 39–19814 (84 FR 69997, December 20, 2019) (''AD 2019–24–11'').

(2) This AD affects AD 2010–26–05, Amendment 39–16544 (75 FR 79952, December 21, 2010) (''AD 2010–26–05'').

(c) Applicability

This AD applies to Dassault Aviation Model FALCON 900EX airplanes, certificated in any category, as identified in European Union Aviation Safety Agency (EASA) AD 2020–0116, dated May 20, 2020 (''EASA AD 2020–0116'').

(d) Subject

Air Transport Association (ATA) of America Code 05, Time Limits/Maintenance Checks.

(e) Reason

This AD was prompted by a determination that new or more restrictive airworthiness limitations are necessary. The FAA is issuing this AD to address reduced structural integrity of the airplane.

(f) Compliance

Comply with this AD within the compliance times specified, unless already done.

(g) Retained Maintenance or Inspection Program Revision, with No Changes

This paragraph restates the requirements of paragraph (i) of AD 2019–24–11, with no changes. Within 90 days after January 24, 2020 (the effective date AD 2019–24–11), revise the existing maintenance or inspection program, as applicable, to incorporate the information specified in Chapter 5–40, Airworthiness Limitations, Revision 16, dated September 2018, of the Dassault FALCON 900EX Maintenance Manual. The initial compliance times for accomplishing the actions are at the times specified in Chapter 5–40, Airworthiness Limitations, Revision 16, dated September 2018, or 90 days after January 24, 2020, whichever occurs later, except as provided by paragraphs (g)(1) through (4) of this AD. Accomplishing the maintenance or inspection program revision required by paragraph (i) of this AD terminates the requirements of this paragraph.

(1) The term ''LDG'' in the ''First Inspection'' column of any table in the service information means total airplane landings.

(2) The term ''FH'' in the ''First Inspection'' column of any table in the service information means total flight hours.

(3) The term ''FC'' in the ''First Inspection'' column of any table in the service information means total flight cycles.

(4) The term ''M'' in the ''First Inspection'' column of any table in the service information means months since the date of issuance of the original airworthiness certificate or the date of issuance of the original export certificate of airworthiness.

(h) Retained Restrictions on Alternative Actions and Intervals, with a New Exception

This paragraph restates the requirements of paragraph (j) of AD 2019–24–11, with a new exception. Except as required by paragraph (i) of this AD, after the maintenance or inspection program has been revised as required by paragraph (g) of this AD, no alternative actions (*e.g.,* inspections) or intervals may be used unless the actions or intervals are approved as an alternative method of compliance (AMOC) in accordance with the procedures specified in paragraph (m)(1) of this AD.

(i) New Maintenance or Inspection Program Revision

Except as specified in paragraph (j) of this AD: Comply with all required actions and compliance times specified in, and in accordance with, EASA AD 2020–0116. Accomplishing the maintenance or inspection program revision required by this paragraph terminates the requirements of paragraph (g) of this AD.

(j) Exceptions to EASA AD 2020–0116

(1) The requirements specified in paragraphs (1) and (2) of EASA AD 2020–0116 do not apply to this AD.

(2) Paragraph (3) of EASA AD 2020–0116 specifies revising ''the approved AMP''

within 12 months after its effective date, but this AD requires revising the existing maintenance or inspection program, as applicable, to incorporate the ''limitations, tasks and associated thresholds and intervals'' specified in paragraph (3) of EASA AD 2020–0116 within 90 days after the effective date of this AD.

(3) The initial compliance time for doing the tasks specified in paragraph (3) of EASA AD 2020–0116 is at the applicable ''associated thresholds'' specified in paragraph (3) of EASA AD 2020–0116, or within 90 days after the effective date of this AD, whichever occurs later.

(4) The provisions specified in paragraphs (4) and (5) of EASA AD 2020–0116 do not apply to this AD.

(5) The ''Remarks'' section of EASA AD 2020–0116 does not apply to this AD.

(k) New Provisions for Alternative Actions and Intervals

After the maintenance or inspection program has been revised as required by paragraph (i) of this AD, no alternative actions (*e.g.,* inspections) and intervals are allowed unless they are approved as specified in the provisions of the ''Ref. Publications'' section of EASA AD 2020–0116.

(l) Terminating Actions for Certain Actions in AD 2010–26–05

Accomplishing the actions required by paragraph (g) or (i) of this AD terminates the requirements of paragraph (g)(1) of AD 2010–26–05, for Dassault Aviation Model FALCON 900EX airplanes, serial numbers 1 through 96 inclusive, and serial numbers 98 through 119 inclusive.

(m) Other FAA AD Provisions

The following provisions also apply to this AD:

(1) *Alternative Methods of Compliance (AMOCs):* The Manager, Large Aircraft Section, International Validation Branch, FAA, has the authority to approve AMOCs for this AD, if requested using the procedures found in 14 CFR 39.19. In accordance with 14 CFR 39.19, send your request to your principal inspector or local Flight Standards District Office, as appropriate. If sending information directly to the Large Aircraft Section, International Validation Branch, send it to the attention of the person identified in paragraph (n) of this AD. Information may be emailed to: *9-AVS-AIR-730-AMOC@faa.gov.*

(2) *Contacting the Manufacturer:* For any requirement in this AD to obtain instructions from a manufacturer, the instructions must be accomplished using a method approved by the Manager, Large Aircraft Section, International Validation Branch, FAA; or EASA; or Dassault Aviation's EASA Design Organization Approval (DOA). If approved by the DOA, the approval must include the DOA-authorized signature.

(n) Related Information

For more information about this AD, contact Tom Rodriguez, Aerospace Engineer, Large Aircraft Section, International Validation Branch, FAA, 2200 South 216th St., Des Moines, WA 98198; telephone and fax 206–231–3226; email *tom.rodriguez@faa.gov.*

(o) Material Incorporated by Reference

(1) The Director of the Federal Register approved the incorporation by reference (IBR) of the service information listed in this paragraph under 5 U.S.C. 552(a) and 1 CFR part 51.

(2) You must use this service information as applicable to do the actions required by this AD, unless this AD specifies otherwise.

(3) The following service information was approved for IBR on December 7, 2020.

(i) European Union Aviation Safety Agency (EASA) AD 2020–0116, dated May 20, 2020.

(ii) [Reserved]

(4) The following service information was approved for IBR on January 24, 2020 (84 FR 69997, December 20, 2019).

(i) Chapter 5–40, Airworthiness Limitations, Revision 16, dated September 2018, of the Dassault FALCON 900EX Maintenance Manual.

(ii) [Reserved]

(5) For EASA AD 2020–0116, contact the EASA, Konrad-Adenauer-Ufer 3, 50668 Cologne, Germany; telephone +49 221 8999 000; email *ADs@easa.europa.eu;* internet *www.easa.europa.eu.* You may find this EASA AD on the EASA website at *https://ad.easa.europa.eu.*

(6) For Dassault service information identified in this AD, contact Dassault Falcon Jet Corporation, Teterboro Airport, P.O. Box 2000, South Hackensack, NJ 07606; telephone 201–440–6700; internet *https://www.dassaultfalcon.com.*

(7) You may view this material at the FAA, Airworthiness Products Section, Operational Safety Branch, 2200 South 216th St., Des Moines, WA. For information on the availability of this material at the FAA, call 206–231–3195. This material may be found in the AD docket on the internet at *https://www.regulations.gov* by searching for and locating Docket No. FAA–2020–0678.

(8) You may view this material that is incorporated by reference at the National Archives and Records Administration (NARA). For information on the availability of this material at NARA, email *fedreg.legal@nara.gov,* or go to: *https://www.archives.gov/federal-register/cfr/ibr-locations.html.*

Issued on October 8, 2020.

Gaetano A. Sciortino,

Deputy Director for Strategic Initiatives, Compliance & Airworthiness Division, Aircraft Certification Service.

[FR Doc. 2020–24098 Filed 10–30–20; 8:45 am]

BILLING CODE 4910–13–P

DEPARTMENT OF TRANSPORTATION

Federal Aviation Administration

14 CFR Part 39

[Docket No. FAA–2020–0677; Product Identifier 2020–NM–099–AD; Amendment 39–21293; AD 2020–21–20]

RIN 2120–AA64

Airworthiness Directives; Dassault Aviation Airplanes

AGENCY: Federal Aviation Administration (FAA), Department of Transportation (DOT).

ACTION: Final rule.

SUMMARY: The FAA is superseding Airworthiness Directive (AD) 2019–23–03, which applied to certain Dassault Aviation Model FALCON 900EX airplanes. AD 2019–23–03 required revising the existing maintenance or inspection program, as applicable, to incorporate new or more restrictive maintenance requirements and/or airworthiness limitations. This AD continues to require those maintenance or inspection program revisions, and also requires revising the existing maintenance or inspection program, as applicable, to incorporate additional new or more restrictive airworthiness limitations; as specified in a European Union Aviation Safety Agency (EASA) AD, which is incorporated by reference. This AD was prompted by a determination that new or more restrictive airworthiness limitations are necessary. The FAA is issuing this AD to address the unsafe condition on these products.

DATES: This AD is effective December 7, 2020.

The Director of the Federal Register approved the incorporation by reference of a certain publication listed in this AD as of December 7, 2020.

The Director of the Federal Register approved the incorporation by reference of a certain other publication listed in this AD as of January 13, 2020 (84 FR 67171, December 9, 2019).

ADDRESSES: For the EASA material incorporated by reference (IBR) in this AD, contact the EASA, Konrad-Adenauer-Ufer 3, 50668 Cologne, Germany; telephone +49 221 8999 000; email *ADs@easa.europa.eu;* internet *www.easa.europa.eu.* You may find this IBR material on the EASA website at *https://ad.easa.europa.eu.*

For the Dassault service information identified in this AD, contact Dassault Falcon Jet Corporation, Teterboro Airport, P.O. Box 2000, South Hackensack, NJ 07606; telephone 201–

440–6700; internet *https://www.dassaultfalcon.com.*

You may view this IBR material at the FAA, Airworthiness Products Section, Operational Safety Branch, 2200 South 216th St., Des Moines, WA. For information on the availability of this material at the FAA, call 206–231–3195. It is also available in the AD docket on the internet at *https://www.regulations.gov* by searching for and locating Docket No. FAA–2020–0677.

Examining the AD Docket

You may examine the AD docket on the internet at *https://www.regulations.gov* by searching for and locating Docket No. FAA–2020–0677; or in person at Docket Operations between 9 a.m. and 5 p.m., Monday through Friday, except Federal holidays. The AD docket contains this final rule, any comments received, and other information. The address for Docket Operations is U.S. Department of Transportation, Docket Operations, M–30, West Building Ground Floor, Room W12–140, 1200 New Jersey Avenue SE, Washington, DC 20590.

FOR FURTHER INFORMATION CONTACT: Tom Rodriguez, Aerospace Engineer, Large Aircraft Section, International Validation Branch, FAA, 2200 South 216th St., Des Moines, WA 98198; telephone and fax: 206–231–3226; email: *tom.rodriguez@faa.gov.*

SUPPLEMENTARY INFORMATION:

Discussion

The EASA, which is the Technical Agent for the Member States of the European Union, has issued EASA AD 2020–0117, dated May 20, 2020 (''EASA AD 2020–0117'') (also referred to as the Mandatory Continuing Airworthiness Information, or ''the MCAI''), to correct an unsafe condition for certain Dassault Aviation Model FALCON 900EX airplanes. EASA AD 2020–0117 superseded EASA AD 2019–0134 (which corresponds to FAA AD 2019–23–03, Amendment 39–19796 (84 FR 67171, December 9, 2019) (''AD 2019–23–03'')). Airplanes with an original airworthiness certificate or original export certificate of airworthiness issued after October 2, 2019 must comply with the airworthiness limitations specified as part of the approved type design and referenced on the type certificate data sheet; this AD therefore does not include those airplanes in the applicability.

The FAA issued a notice of proposed rulemaking (NPRM) to amend 14 CFR part 39 to supersede AD 2019–23–03. AD 2019–23–03 applied to certain Dassault Aviation Model FALCON 900EX airplanes. The NPRM published in the **Federal Register** on August 3, 2020 (85 FR 46560). The NPRM was prompted by a determination that new or more restrictive airworthiness limitations are necessary. The NPRM proposed to continue to require the maintenance or inspection program revisions required by AD 2019–23–03, and also proposed to require revising the existing maintenance or inspection program, as applicable, to incorporate additional new or more restrictive airworthiness limitations, as specified in an EASA AD.

The FAA is issuing this AD to address, among other things, fatigue cracking and damage in principal structural elements; such fatigue cracking and damage could result in reduced structural integrity of the airplane. See the MCAI for additional background information.

Comments

The FAA gave the public the opportunity to participate in developing this final rule. The FAA received no comments on the NPRM or on the determination of the cost to the public.

Explanation of Change to Paragraph (g) of This AD

The FAA has revised paragraph (g) of this AD to clarify that it applies only to airplanes with an original airworthiness certificate or original export certificate of airworthiness issued on or before September 1, 2018. This information was inadvertently left out of the proposed AD. Paragraph (g) of this AD is a retained action from AD 2019–23–03, and this clarification limits the applicability of the retained action to match that in AD 2019–23–03.

Conclusion

The FAA reviewed the relevant data and determined that air safety and the public interest require adopting this final rule with the change described previously and minor editorial changes. The FAA has determined that these minor changes:

- Are consistent with the intent that was proposed in the NPRM for addressing the unsafe condition; and
- Do not add any additional burden upon the public than was already proposed in the NPRM.

The FAA also determined that these changes will not increase the economic burden on any operator or increase the scope of this final rule.

Related IBR Material Under 1 CFR Part 51

EASA AD 2020–0117 describes procedures for maintenance tasks and airworthiness limitations.

This AD also requires Chapter 5–40, Airworthiness Limitations, Revision 11, dated September 2018, of the Dassault Falcon 900EX EASy, Falcon 900LX, and Falcon 900DX Maintenance Manual, which the Director of the Federal Register approved for incorporation by reference as of January 13, 2020 (84 FR 67171, December 9, 2019).

This material is reasonably available because the interested parties have access to it through their normal course of business or by the means identified in the **ADDRESSES** section.

Costs of Compliance

The FAA estimates that this AD affects 97 airplanes of U.S. registry. The FAA estimates the following costs to comply with this AD:

The FAA estimates the total cost per operator for the retained actions from AD 2019–23–03 to be $7,650 (90 work-hours × $85 per work-hour).

The FAA has determined that revising the maintenance or inspection program takes an average of 90 work-hours per operator, although the FAA recognizes that this number may vary from operator to operator. In the past, the FAA has estimated that this action takes 1 work-hour per airplane. Since operators incorporate maintenance or inspection program changes for their affected fleet(s), the FAA has determined that a per-operator estimate is more accurate than a per-airplane estimate. Therefore, the FAA estimates the total cost per operator for the new actions to be $7,650 (90 work-hours × $85 per work-hour).

Authority for This Rulemaking

Title 49 of the United States Code specifies the FAA's authority to issue rules on aviation safety. Subtitle I, section 106, describes the authority of the FAA Administrator. Subtitle VII: Aviation Programs, describes in more detail the scope of the Agency's authority.

The FAA is issuing this rulemaking under the authority described in Subtitle VII, Part A, Subpart III, Section 44701: General requirements. Under that section, Congress charges the FAA with promoting safe flight of civil aircraft in air commerce by prescribing regulations for practices, methods, and procedures the Administrator finds necessary for safety in air commerce. This regulation is within the scope of that authority because it addresses an

unsafe condition that is likely to exist or develop on products identified in this rulemaking action.

Regulatory Findings

This AD will not have federalism implications under Executive Order 13132. This AD will not have a substantial direct effect on the States, on the relationship between the national government and the States, or on the distribution of power and responsibilities among the various levels of government.

For the reasons discussed above, I certify that this AD:

(1) Is not a ''significant regulatory action'' under Executive Order 12866,

(2) Will not affect intrastate aviation in Alaska, and

(3) Will not have a significant economic impact, positive or negative, on a substantial number of small entities under the criteria of the Regulatory Flexibility Act.

List of Subjects in 14 CFR Part 39

Air transportation, Aircraft, Aviation safety, Incorporation by reference, Safety.

Adoption of the Amendment

Accordingly, under the authority delegated to me by the Administrator, the FAA amends 14 CFR part 39 as follows:

PART 39—AIRWORTHINESS DIRECTIVES

■ 1. The authority citation for part 39 continues to read as follows:

Authority: 49 U.S.C. 106(g), 40113, 44701.

§ 39.13 [Amended]

■ 2. The FAA amends § 39.13 by:

■ a. Removing Airworthiness Directive (AD) 2019–23–03, Amendment 39–19796 (84 FR 67171, December 9, 2019), and

■ b. Adding the following new AD:

2020–21–20 Dassault Aviation: Amendment 39–21293; Docket No. FAA–2020–0677; Product Identifier 2020–NM–099–AD.

(a) Effective Date

This AD is effective December 7, 2020.

(b) Affected ADs

(1) This AD replaces AD 2019–23–03, Amendment 39–19796 (84 FR 67171, December 9, 2019) (''AD 2019–23–03'').

(2) This AD affects AD 2010–26–05, Amendment 39–16544 (75 FR 79952, December 21, 2010) (''AD 2010–26–05'').

(c) Applicability

This AD applies to Dassault Aviation Model FALCON 900EX airplanes, serial number (S/N) 97 and S/Ns 120 and higher, certificated in any category, with an original airworthiness certificate or original export certificate of airworthiness issued on or before October 2, 2019.

(d) Subject

Air Transport Association (ATA) of America Code 05, Time Limits/Maintenance Checks.

(e) Reason

This AD was prompted by a determination that new or more restrictive airworthiness limitations are necessary. The FAA is issuing this AD to address, among other things, fatigue cracking and damage in principal structural elements; such fatigue cracking and damage could result in reduced structural integrity of the airplane.

(f) Compliance

Comply with this AD within the compliance times specified, unless already done.

(g) Retained Maintenance or Inspection Program Revision, With No Changes

This paragraph restates the requirements of paragraph (i) of AD 2019–23–03, with no changes. For airplanes with an original airworthiness certificate or original export certificate of airworthiness issued on or before September 1, 2018: Within 90 days after January 13, 2020 (the effective date of AD 2019–23–03), revise the existing maintenance or inspection program, as applicable, to incorporate the information specified in Chapter 5–40, Airworthiness Limitations, Revision 11, dated September 2018, of the Dassault Falcon 900EX EASy, Falcon 900LX, and Falcon 900DX Maintenance Manual. The initial compliance times for accomplishing the actions are at the times specified in Chapter 5–40, Airworthiness Limitations, Revision 11, dated September 2018, of the Dassault Falcon 900EX EASy, Falcon 900LX, and Falcon 900DX Maintenance Manual, or 90 days after the effective date of this AD, whichever occurs later, except as provided by paragraphs (g)(1) through (4) of this AD. Accomplishing the maintenance or inspection program revision required by paragraph (i) of this AD terminates the requirements of this paragraph.

(1) The term ''LDG'' in the ''First Inspection'' column of any table in the service information means total airplane landings.

(2) The term ''FH'' in the ''First Inspection'' column of any table in the service information means total flight hours.

(3) The term ''FC'' in the ''First Inspection'' column of any table in the service information means total flight cycles.

(4) The term ''M'' in the ''First Inspection'' column of any table in the service information means months since the date of issuance of the original airworthiness certificate or the date of issuance of the original export certificate of airworthiness.

(h) Retained Restrictions on Alternative Actions and Intervals, With a New Exception

This paragraph restates the requirements of paragraph (j) of AD 2019–23–03, with a new exception. Except as required by paragraph (i) of this AD, after the existing maintenance or inspection program has been revised as required by paragraph (g) of this AD, no alternative actions (*e.g.,* inspections) or intervals may be used unless the actions and intervals are approved as an AMOC in accordance with the procedures specified in paragraph (m)(1) of this AD.

(i) New Maintenance or Inspection Program Revision

Except as specified in paragraph (j) of this AD: Comply with all required actions and compliance times specified in, and in accordance with, European Union Aviation Safety Agency (EASA) AD 2020–0117, dated May 20, 2020 (''EASA AD 2020–0117''). Accomplishing the maintenance or inspection program revision required by this paragraph terminates the requirements of paragraph (g) of this AD.

(j) Exceptions to EASA AD 2020–0117

(1) The requirements specified in paragraphs (1) and (2) of EASA AD 2020–0117 do not apply to this AD.

(2) Paragraph (3) of EASA AD 2020–0117 specifies revising ''the approved AMP'' within 12 months after its effective date, but this AD requires revising the existing maintenance or inspection program, as applicable, to incorporate the ''limitations, tasks and associated thresholds and intervals'' specified in paragraph (3) of EASA AD 2020–0117 within 90 days after the effective date of this AD.

(3) The initial compliance time for doing the tasks specified in paragraph (3) of EASA AD 2020–0117 is at the applicable ''associated thresholds'' specified in paragraph (3) of EASA AD 2020–0117, or within 90 days after the effective date of this AD, whichever occurs later.

(4) The provisions specified in paragraphs (4) and (5) of EASA AD 2020–0117 do not apply to this AD.

(5) The ''Remarks'' section of EASA AD 2020–0117 does not apply to this AD.

(k) New Provisions for Alternative Actions and Intervals

After the maintenance or inspection program has been revised as required by paragraph (i) of this AD, no alternative actions (*e.g.,* inspections) and intervals are allowed unless they are approved as specified in the provisions of the ''Ref. Publications'' section of EASA AD 2020–0117.

(l) Terminating Actions for Certain Actions in AD 2010–26–05

Accomplishing the actions required by paragraph (g) or (i) of this AD terminates the requirements of paragraph (g)(1) of AD 2010–26–05, for Dassault Aviation Model FALCON 900EX airplanes, 900EX airplanes, S/N 97 and S/Ns 120 and higher.

(m) Other FAA AD Provisions

The following provisions also apply to this AD:

(1) *Alternative Methods of Compliance (AMOCs):* The Manager, Large Aircraft Section, International Validation Branch, FAA, has the authority to approve AMOCs for this AD, if requested using the procedures

found in 14 CFR 39.19. In accordance with 14 CFR 39.19, send your request to your principal inspector or local Flight Standards District Office, as appropriate. If sending information directly to the Large Aircraft Section, International Validation Branch, send it to the attention of the person identified in paragraph (n) of this AD. Information may be emailed to: *9-AVS-AIR-730-AMOC@faa.gov.*

(2) *Contacting the Manufacturer:* For any requirement in this AD to obtain instructions from a manufacturer, the instructions must be accomplished using a method approved by the Manager, Large Aircraft Section, International Validation Branch, FAA; or EASA; or Dassault Aviation's EASA Design Organization Approval (DOA). If approved by the DOA, the approval must include the DOA-authorized signature.

(n) Related Information

For more information about this AD, contact Tom Rodriguez, Aerospace Engineer, Large Aircraft Section, International Validation Branch, FAA, 2200 South 216th St., Des Moines, WA 98198; telephone and fax 206–231–3226; email *tom.rodriguez@faa.gov.*

(o) Material Incorporated by Reference

(1) The Director of the Federal Register approved the incorporation by reference (IBR) of the service information listed in this paragraph under 5 U.S.C. 552(a) and 1 CFR part 51.

(2) You must use this service information as applicable to do the actions required by this AD, unless this AD specifies otherwise.

(3) The following service information was approved for IBR on December 7, 2020.

(i) European Union Aviation Safety Agency (EASA) AD 2020–0117, dated May 20, 2020.

(ii) [Reserved]

(4) The following service information was approved for IBR on January 13, 2020 (84 FR 67171, December 9, 2019).

(i) Chapter 5–40, Airworthiness Limitations, Revision 11, dated September 2018, of the Dassault Falcon 900EX EASy, Falcon 900LX, and Falcon 900DX Maintenance Manual.

(ii) [Reserved]

(5) For EASA AD 2020–0117, contact the EASA, Konrad-Adenauer-Ufer 3, 50668 Cologne, Germany; telephone +49 221 8999 000; email *ADs@easa.europa.eu;* internet *www.easa.europa.eu.* You may find this EASA AD on the EASA website at *https://ad.easa.europa.eu.*

(6) For Dassault service information identified in this AD, contact Dassault Falcon Jet Corporation, Teterboro Airport, P.O. Box 2000, South Hackensack, NJ 07606; telephone 201–440–6700; internet *https://www.dassaultfalcon.com.*

(7) You may view this material at the FAA, Airworthiness Products Section, Operational Safety Branch, 2200 South 216th St., Des Moines, WA. For information on the availability of this material at the FAA, call 206–231–3195. This material may be found in the AD docket on the internet at *https://www.regulations.gov* by searching for and locating Docket No. FAA–2020–0677.

(8) You may view this material that is incorporated by reference at the National Archives and Records Administration (NARA). For information on the availability of this material at NARA, email *fedreg.legal@nara.gov,* or go to: *https://www.archives.gov/federal-register/cfr/ibr-locations.html.*

Issued on October 8, 2020.

Gaetano A. Sciortino,

Deputy Director for Strategic Initiatives, Compliance & Airworthiness Division, Aircraft Certification Service.

[FR Doc. 2020–24156 Filed 10–30–20; 8:45 am]

BILLING CODE 4910–13–P

DEPARTMENT OF TRANSPORTATION

Federal Aviation Administration

14 CFR Part 71

[Docket No. FAA–2020–0763; Airspace Docket No. 20–ASO–22]

RIN 2120–AA66

Amendment of Class E Airspace; Montezuma, GA

AGENCY: Federal Aviation Administration (FAA), DOT.

ACTION: Final rule.

SUMMARY: This action amends Class E airspace extending upward from 700 feet above the surface in Montezuma, GA, due to the decommissioning of the Montezuma non-directional beacon (NDB) and cancellation of the associated approach at Dr. CP Savage Sr. Airport. This action also updates the geographic coordinates of the airport. Controlled airspace is necessary for the safety and management of instrument flight rules (IFR) operations in the area.

DATES: Effective 0901 UTC, December 31, 2020. The Director of the Federal Register approves this incorporation by reference action under Title 1 Code of Federal Regulations part 51, subject to the annual revision of FAA Order 7400.11 and publication of conforming amendments.

ADDRESSES: FAA Order 7400.11E, Airspace Designations and Reporting Points, and subsequent amendments can be viewed online at *https://www.faa.gov/air_traffic/publications/.* For further information, you can contact the Airspace Policy Group, Federal Aviation Administration, 800 Independence Avenue SW, Washington, DC 20591; Telephone: (202) 267–8783. The Order is also available for inspection at the National Archives and Records Administration (NARA). For information on the availability of FAA Order 7400.11E at NARA, email *fedreg.legal@nara.gov* or go to *https://www.archives.gov/federal-register/cfr/ibr-locations.html.*

FOR FURTHER INFORMATION CONTACT: John Fornito, Operations Support Group, Eastern Service Center, Federal Aviation Administration, 1701 Columbia Ave., College Park, GA 30337; Telephone (404) 305–6364.

SUPPLEMENTARY INFORMATION:

Authority for This Rulemaking

The FAA's authority to issue rules regarding aviation safety is found in Title 49 of the United States Code. Subtitle I, Section 106 describes the authority of the FAA Administrator. Subtitle VII, Aviation Programs, describes in more detail the scope of the agency's authority. This rulemaking is promulgated under the authority described in Subtitle VII, Part A, Subpart I, Section 40103. Under that section, the FAA is charged with prescribing regulations to assign the use of airspace necessary to ensure the safety of aircraft and the efficient use of airspace. This regulation is within the scope of that authority as it amends Class E airspace at Dr. CP Savage Sr. Airport, Montezuma, GA, to support IFR operations in the area.

History

The FAA published a notice of prosed rulemaking in the **Federal Register** (85 FR 53309, August 28, 2020) for Docket No. FAA–2020–0763 to amend Class E airspace extending upward from 700 feet above the surface at Dr. CP Savage Sr. Airport, Montezuma, GA, by eliminating the Montezuma NDB and the associated extension, and increasing the radius of the airport from 6.3 miles to 6.9 miles. In addition, the FAA proposed to update the geographic coordinates of the airport to coincide with the FAA's aeronautical database.

Interested parties were invited to participate in this rulemaking effort by submitting written comments on the proposal to the FAA. No comments pertaining to the proposal were received.

Class E airspace designations are published in Paragraph 6005, of FAA Order 7400.11E, dated July 21, 2020, and effective September 15, 2020, which is incorporated by reference in 14 CFR 71.1. The Class E airspace designations listed in this document will be published subsequently in the Order.

Availability and Summary of Documents for Incorporation by Reference

This document amends FAA Order 7400.11E, Airspace Designations and Reporting Points, dated July 21, 2020, and effective September 15, 2020. FAA Order 7400.11E is publicly available as listed in the **ADDRESSES** section of this

document. FAA Order 7400.11E lists Class A, B, C, D, and E airspace areas, air traffic routes, and reporting points.

The Rule

This amendment to Title 14 Code of Federal Regulations (14 CFR) part 71 amends Class E airspace extending upward from 700 feet above the surface at Dr. CP Savage Sr. Airport, Montezuma, GA, by eliminating the Montezuma NDB and the associated extension, and increasing the radius of the airport from 6.3 miles to 6.9 miles. In addition, the FAA updates the geographic coordinates of the airport to coincide with the FAA's aeronautical database. These changes are necessary for continued safety and management of IFR operations in the area.

FAA Order 7400.11, Airspace Designations and Reporting Points, is published yearly and effective on September 15.

Regulatory Notices and Analyses

The FAA has determined that this regulation only involves an established body of technical regulations for which frequent and routine amendments are necessary to keep them operationally current. It therefore: (1) Is not a ''significant regulatory action'' under Executive Order 12866; (2) is not a ''significant rule'' under DOT Regulatory Policies and Procedures (44 FR 11034; February 26, 1979); and (3) does not warrant preparation of a regulatory evaluation as the anticipated impact is so minimal. Since this is a routine matter that only affects air traffic procedures an air navigation, it is certified that this rule, when promulgated, does not have a significant economic impact on a substantial number of small entities under the criteria of the Regulatory Flexibility Act.

Environmental Review

The FAA has determined that this action qualifies for categorical exclusion under the National Environmental Policy Act in accordance with FAA Order 1050.1F, ''Environmental Impacts: Policies and Procedures,'' paragraph 5–6.5a. This airspace action is not expected to cause any potentially significant environmental impacts, and no extraordinary circumstances exist that warrant preparation of an environmental assessment.

Lists of Subjects in 14 CFR Part 71

Airspace, Incorporation by reference, Navigation (air).

Adoption of the Amendment

In consideration of the foregoing, the Federal Aviation Administration amends 14 CFR part 71 as follows:

PART 71—DESIGNATION OF CLASS A, B, C, D, AND E AIRSPACE AREAS; AIR TRAFFIC SERVICE ROUTES; AND REPORTING POINTS

■ 1. The authority citation for part 71 continues to read as follows:

Authority: 49 U.S.C. 106(f), 106(g); 40103, 40113, 40120; E.O. 10854, 24 FR 9565, 3 CFR, 1959–1963 Comp., p. 389.

§ 71.1 [Amended]

■ 2.The incorporation by reference in 14 CFR 71.1 of FAA Order 7400.11E, Airspace Designations and Reporting Points, dated July 21, 2020, effective September 15, 2020, is amended as follows:

Paragraph 6005 Class E Airspace Areas Extending Upward From 700 Feet or More Above the Surface of the Earth.

* * * * *

ASO GA E5 Montezuma, GA [Amended]

Dr. CP Savage Sr. Airport, GA
(Lat. 32°18′11″ N, long. 84°00′27″ W)

That airspace extending upward from 700 feet or more above the surface within a 6.9-mile radius of Dr. CP Savage Sr. Airport.

Issued in College Park, Georgia, on October 27, 2020.

Andreese C. Davis,

Manager, Airspace & Procedures Team South, Eastern Service Center, Air Traffic Organization.

[FR Doc. 2020–24179 Filed 10–30–20; 8:45 am]

BILLING CODE 4910–13–P

DEPARTMENT OF TRANSPORTATION

Federal Aviation Administration

14 CFR Part 71

[Docket No. FAA–2020–0730; Airspace Docket No. 20–ASO–20]

RIN 2120–AA66

Amendment of the Class E Airspace; Hartford, KY

AGENCY: Federal Aviation Administration (FAA), DOT.

ACTION: Final rule.

SUMMARY: This action amends the Class E airspace extending upward from 700 feet above the surface at Ohio County Airport, Hartford, KY. This action is the result of an airspace review caused by the decommissioning of the Central City VHF omnidirectional range (VOR) navigation aid as part of the VOR Minimum Operational Network (MON) Program. The geographic coordinates of the airport are also being updated to coincide with the FAA's aeronautical database.

DATES: Effective 0901 UTC, December 31, 2020. The Director of the Federal Register approves this incorporation by reference action under Title 1 Code of Federal Regulations part 51, subject to the annual revision of FAA Order 7400.11 and publication of conforming amendments.

ADDRESSES: FAA Order 7400.11E, Airspace Designations and Reporting Points, and subsequent amendments can be viewed online at *https://www.faa.gov/air_traffic/publications/.* For further information, you can contact the Airspace Policy Group, Federal Aviation Administration, 800 Independence Avenue SW, Washington, DC 20591; telephone: (202) 267–8783. The Order is also available for inspection at the National Archives and Records Administration (NARA). For information on the availability of FAA Order 7400.11E at NARA, email *fedreg.legal@nara.gov* or go to *https://www.archives.gov/federal-register/cfr/ibr-locations.html.*

FOR FURTHER INFORMATION CONTACT: Jeffrey Claypool, Federal Aviation Administration, Operations Support Group, Central Service Center, 10101 Hillwood Parkway, Fort Worth, TX 76177; telephone (817) 222–5711.

SUPPLEMENTARY INFORMATION:

Authority for This Rulemaking

The FAA's authority to issue rules regarding aviation safety is found in Title 49 of the United States Code. Subtitle I, Section 106 describes the authority of the FAA Administrator. Subtitle VII, Aviation Programs, describes in more detail the scope of the agency's authority. This rulemaking is promulgated under the authority described in Subtitle VII, Part A, Subpart I, Section 40103. Under that section, the FAA is charged with prescribing regulations to assign the use of airspace necessary to ensure the safety of aircraft and the efficient use of airspace. This regulation is within the scope of that authority as it amends the Class E airspace extending upward from 700 feet above the surface at Ohio County Airport, Hartford, KY, to support instrument flight rule operations at this airport.

History

The FAA published a notice of proposed rulemaking in the **Federal Register** (85 FR 49610; August 14, 2020) for Docket No. FAA–2020–0730 to

amend the Class E airspace extending upward from 700 feet above the surface at Ohio County Airport, Hartford, KY. Interested parties were invited to participate in this rulemaking effort by submitting written comments on the proposal to the FAA. No comments were received.

Class E airspace designations are published in paragraph 6005 of FAA Order 7400.11E, dated July 21, 2020, and effective September 15, 2020, which is incorporated by reference in 14 CFR 71.1. The Class E airspace designations listed in this document will be published subsequently in the Order.

Availability and Summary of Documents for Incorporation by Reference

This document amends FAA Order 7400.11E, Airspace Designations and Reporting Points, dated July 21, 2020, and effective September 15, 2020. FAA Order 7400.11E is publicly available as listed in the **ADDRESSES** section of this document. FAA Order 7400.11E lists Class A, B, C, D, and E airspace areas, air traffic service routes, and reporting points.

The Rule

This amendment to Title 14 Code of Federal Regulations (14 CFR) part 71 amends the Class E airspace extending upward from 700 feet above the surface to within a 6.5-mile radius (increased from a 6.4-mile radius) of Ohio County Airport, Hartford, KY; and updates the geographic coordinates of the airport to coincide with the FAA's aeronautical database.

This action is the result of an airspace review caused by the decommissioning of the Central City VOR, which provided navigation information for the instrument procedures at this airport, as part of the VOR MON Program.

FAA Order 7400.11, Airspace Designations and Reporting Points, is published yearly and effective on September 15.

Regulatory Notices and Analyses

The FAA has determined that this regulation only involves an established body of technical regulations for which frequent and routine amendments are necessary to keep them operationally current, is non-controversial and unlikely to result in adverse or negative comments. It, therefore: (1) Is not a ''significant regulatory action'' under Executive Order 12866; (2) is not a ''significant rule'' under DOT Regulatory Policies and Procedures (44 FR 11034; February 26, 1979); and (3) does not warrant preparation of a regulatory evaluation as the anticipated impact is so minimal. Since this is a routine matter that only affects air traffic procedures and air navigation, it is certified that this rule, when promulgated, does not have a significant economic impact on a substantial number of small entities under the criteria of the Regulatory Flexibility Act.

Environmental Review

The FAA has determined that this action qualifies for categorical exclusion under the National Environmental Policy Act in accordance with FAA Order 1050.1F, ''Environmental Impacts: Policies and Procedures,'' paragraph 5–6.5.a. This airspace action is not expected to cause any potentially significant environmental impacts, and no extraordinary circumstances exist that warrant preparation of an environmental assessment.

Lists of Subjects in 14 CFR Part 71

Airspace, Incorporation by reference, Navigation (air).

Adoption of the Amendment

In consideration of the foregoing, the Federal Aviation Administration amends 14 CFR part 71 as follows:

PART 71—DESIGNATION OF CLASS A, B, C, D, AND E AIRSPACE AREAS; AIR TRAFFIC SERVICE ROUTES; AND REPORTING POINTS

■ 1. The authority citation for part 71 continues to read as follows:

Authority: 49 U.S.C. 106(f), 106(g); 40103, 40113, 40120; E.O. 10854, 24 FR 9565, 3 CFR, 1959–1963 Comp., p. 389.

§ 71.1 [Amended]

■ 2. The incorporation by reference in 14 CFR 71.1 of FAA Order 7400.11E, Airspace Designations and Reporting Points, dated July 21, 2020, and effective September 15, 2020, is amended as follows:

Paragraph 6005 Class E Airspace Areas Extending Upward From 700 Feet or More Above the Surface of the Earth

* * * * *

ASO KY E5 Hartford, KY [Amended]

Ohio County Airport
(Lat. 37°27′31″ N, long. 86°50′59″ W)

That airspace extending upward from 700 feet or more above the surface within a 6.5-mile radius of Ohio County Airport.

Issued in Fort Worth, Texas, on October 26, 2020.

Martin A. Skinner,

Acting Manager, Operations Support Group, ATO Central Service Center.

[FR Doc. 2020–23954 Filed 10–30–20; 8:45 am]

BILLING CODE 4910–13–P

DEPARTMENT OF TRANSPORTATION

Federal Aviation Administration

14 CFR Part 97

[Docket No. 31337 Amdt. No. 3927]

Standard Instrument Approach Procedures, and Takeoff Minimums and Obstacle Departure Procedures; Miscellaneous Amendments

AGENCY: Federal Aviation Administration (FAA), DOT.

ACTION: Final rule.

SUMMARY: This rule establishes, amends, suspends, or removes Standard Instrument Approach Procedures (SIAPs) and associated Takeoff Minimums and Obstacle Departure Procedures (ODPs) for operations at certain airports. These regulatory actions are needed because of the adoption of new or revised criteria, or because of changes occurring in the National Airspace System, such as the commissioning of new navigational facilities, adding new obstacles, or changing air traffic requirements. These changes are designed to provide safe and efficient use of the navigable airspace and to promote safe flight operations under instrument flight rules at the affected airports.

DATES: This rule is effective November 2, 2020. The compliance date for each SIAP, associated Takeoff Minimums, and ODP is specified in the amendatory provisions.

The incorporation by reference of certain publications listed in the regulations is approved by the Director of the Federal Register as of November 2, 2020.

ADDRESSES: Availability of matters incorporated by reference in the amendment is as follows:

For Examination

1. U.S. Department of Transportation, Docket Ops–M30, 1200 New Jersey Avenue SE, West Bldg., Ground Floor, Washington, DC, 20590–0001.

2. The FAA Air Traffic Organization Service Area in which the affected airport is located;

3. The office of Aeronautical Navigation Products, 6500 South MacArthur Blvd., Oklahoma City, OK 73169 or,

4. The National Archives and Records Administration (NARA). For information on the availability of this material at NARA, email *fedreg.legal@nara.gov* or go to: *https://www.archives.gov/federal-register/cfr/ibr-locations.html.*

Availability

All SIAPs and Takeoff Minimums and ODPs are available online free of charge. Visit the National Flight Data Center at *nfdc.faa.gov* to register. Additionally, individual SIAP and Takeoff Minimums and ODP copies may be obtained from the FAA Air Traffic Organization Service Area in which the affected airport is located.

FOR FURTHER INFORMATION CONTACT: Thomas J. Nichols, Flight Procedures and Airspace Group, Flight Technologies and Procedures Division, Flight Standards Service, Federal Aviation Administration. Mailing Address: FAA Mike Monroney Aeronautical Center, Flight Procedures and Airspace Group, 6500 South MacArthur Blvd., Registry Bldg. 29, Room 104, Oklahoma City, OK 73169. Telephone: (405) 954–4164.

SUPPLEMENTARY INFORMATION: This rule amends 14 CFR part 97 by establishing, amending, suspending, or removes SIAPS, Takeoff Minimums and/or ODPS. The complete regulatory description of each SIAP and its associated Takeoff Minimums or ODP for an identified airport is listed on FAA form documents which are incorporated by reference in this amendment under 5 U.S.C. 552(a), 1 CFR part 51, and 14 CFR part 97.20. The applicable FAA forms are FAA Forms 8260–3, 8260–4, 8260–5, 8260–15A, and 8260–15B, when required by an entry on 8260–15A.

The large number of SIAPs, Takeoff Minimums and ODPs, their complex nature, and the need for a special format make publication in the **Federal Register** expensive and impractical. Further, airmen do not use the regulatory text of the SIAPs, Takeoff Minimums or ODPs, but instead refer to their graphic depiction on charts printed by publishers of aeronautical materials. Thus, the advantages of incorporation by reference are realized and publication of the complete description of each SIAP, Takeoff Minimums and ODP listed on FAA form documents is unnecessary. This amendment provides the affected CFR sections and specifies the types of SIAPS, Takeoff Minimums and ODPs with their applicable effective dates. This amendment also identifies the airport and its location, the procedure, and the amendment number.

Availability and Summary of Material Incorporated by Reference

The material incorporated by reference is publicly available as listed in the **ADDRESSES** section.

The material incorporated by reference describes SIAPS, Takeoff Minimums and/or ODPS as identified in the amendatory language for part 97 of this final rule.

The Rule

This amendment to 14 CFR part 97 is effective upon publication of each separate SIAP, Takeoff Minimums and ODP as amended in the transmittal. Some SIAP and Takeoff Minimums and textual ODP amendments may have been issued previously by the FAA in a Flight Data Center (FDC) Notice to Airmen (NOTAM) as an emergency action of immediate flight safety relating directly to published aeronautical charts.

The circumstances that created the need for some SIAP and Takeoff Minimums and ODP amendments may require making them effective in less than 30 days. For the remaining SIAPs and Takeoff Minimums and ODPs, an effective date at least 30 days after publication is provided.

Further, the SIAPs and Takeoff Minimums and ODPs contained in this amendment are based on the criteria contained in the U.S. Standard for Terminal Instrument Procedures (TERPS). In developing these SIAPs and Takeoff Minimums and ODPs, the TERPS criteria were applied to the conditions existing or anticipated at the affected airports. Because of the close and immediate relationship between these SIAPs, Takeoff Minimums and ODPs, and safety in air commerce, I find that notice and public procedure under 5 U.S.C. 553(b) are impracticable and contrary to the public interest and, where applicable, under 5 U.S.C. 553(d), good cause exists for making some SIAPs effective in less than 30 days.

The FAA has determined that this regulation only involves an established body of technical regulations for which frequent and routine amendments are necessary to keep them operationally current. It, therefore—(1) is not a ''significant regulatory action'' under Executive Order 12866; (2) is not a ''significant rule'' under DOT Regulatory Policies and Procedures (44 FR 11034; February 26, 1979); and (3) does not warrant preparation of a regulatory evaluation as the anticipated impact is so minimal. For the same reason, the FAA certifies that this amendment will not have a significant economic impact on a substantial number of small entities under the criteria of the Regulatory Flexibility Act.

List of Subjects in 14 CFR Part 97

Air Traffic Control, Airports, Incorporation by reference, Navigation (air).

Issued in Washington, DC, on October 16, 2020.

Wade Terrell,

Aviation Safety Manager, Flight Procedures & Airspace Group Flight Technologies and Procedures Division.

Adoption of the Amendment

Accordingly, pursuant to the authority delegated to me, Title 14, Code of Federal Regulations, Part 97 (14 CFR part 97) is amended by establishing, amending, suspending, or removing Standard Instrument Approach Procedures and/or Takeoff Minimums and Obstacle Departure Procedures effective at 0901 UTC on the dates specified, as follows:

PART 97—STANDARD INSTRUMENT APPROACH PROCEDURES

■ 1. The authority citation for part 97 continues to read as follows:

Authority: 49 U.S.C. 106(f), 106(g), 40103, 40106, 40113, 40114, 40120, 44502, 44514, 44701, 44719, 44721–44722.

■ 2. Part 97 is amended to read as follows:

Effective 3 December 2020

Paso Robles, CA, Paso Robles Muni, VOR RWY 19, Amdt 5
Fernandina Beach, FL, KFHB, RNAV (GPS) RWY 22, Amdt 1E
Keokuk, IA, KEOK, NDB RWY 26, Amdt 1B, CANCELLED
Shreveport, LA, Shreveport Downtown, RNAV (GPS) RWY 14, Amdt 1B
Shreveport, LA, Shreveport Downtown, RNAV (GPS) RWY 23, Orig–A
Columbia, SC, Jim Hamilton L B Owens, RNAV (GPS) RWY 31, Amdt 1A
Dallas, TX, Dallas Executive, ILS OR LOC RWY 31, Amdt 9A
Dallas, TX, Dallas Executive, RNAV (GPS) RWY 17, Orig–B
Dallas, TX, Dallas Executive, RNAV (GPS) RWY 31, Amdt 1B
Dallas, TX, Dallas Executive, RNAV (GPS) RWY 35, Orig–B
Dallas, TX, Dallas Executive, VOR RWY 17, Amdt 1B
Hebbronville, TX, Jim Hogg County, NDB RWY 13, Amdt 4, CANCELLED
Farmville, VA, KFVX, NDB RWY 3, Amdt 6A, CANCELLED

Effective 31 December 2020

King Cove, AK, King Cove, COLD BAY TWO, Graphic DP
King Cove, AK, King Cove, RNAV (GPS)–A, Orig–C
King Cove, AK, King Cove, Takeoff Minimums and Obstacle DP, Amdt 1
King Salmon, AK, King Salmon, Takeoff Minimums and Obstacle DP, Amdt 2
Koyuk, AK, Koyuk Alfred Adams, NDB RWY 1, Amdt 1C, CANCELLED

Koyuk, AK, Koyuk Alfred Adams, RNAV (GPS) RWY 1, Amdt 1
Sleetmute, AK, Sleetmute, RNAV (GPS) RWY 33, Orig
Sleetmute, AK, Sleetmute, SPARREVOHN ONE, Graphic DP
Sleetmute, AK, Sleetmute, Takeoff Minimums and Obstacle DP, Orig
Springdale, AR, Springdale Muni, VOR/DME RWY 36, Amdt 9D, CANCELLED
Gooding, ID, Gooding Muni, Takeoff Minimums and Obstacle DP, Amdt 1
Bardstown, KY, Samuels Field, VOR RWY 3, Amdt 1, CANCELLED
Campbellsville, KY, Taylor County, VOR/DME–A, Amdt 7, CANCELLED
Marion, KY, Marion-Crittenden Co James C Johnson Rgnl, Takeoff Minimums and Obstacle DP, Amdt 1A
Pittsfield, ME, Pittsfield Muni, NDB RWY 36, Amdt 4E, CANCELLED
Flint, MI, KFNT, RADAR–1, Amdt 8A, CANCELLED
Port Huron, MI, KPHN, RNAV (GPS) RWY 4, Amdt 1A
Port Huron, MI, KPHN, RNAV (GPS) RWY 22, Amdt 1A
South St Paul, MN, South St Paul Muni-Richard E Fleming Fld, NDB–B, Amdt 4A, CANCELLED
St Paul, MN, St Paul Downtown Holman Fld, NDB RWY 31, Amdt 9, CANCELLED
St Paul, MN, Lake Elmo, NDB RWY 4, Amdt 5A, CANCELLED
Clinton, MO, Clinton Rgnl, NDB RWY 4, Amdt 8A, CANCELLED
Clinton, MO, Clinton Rgnl, NDB RWY 22, Amdt 9A, CANCELLED
Gulfport, MS, KGPT, ILS Z OR LOC Z RWY 14, ILS Z RWY 14 (SA CAT II), Amdt 15A
Gulfport, MS, KGPT, VOR Z OR TACAN Z RWY 14, Amdt 4A
Twin Bridges, MT, Ruby Valley Field, BRIDGES TWO, Graphic DP
Twin Bridges, MT, Ruby Valley Field, DILLON TWO, Graphic DP
Twin Bridges, MT, KRVF, RNAV (GPS) RWY 17, Orig–C
Twin Bridges, MT, KRVF, RNAV (GPS) RWY 35, Orig–C
Twin Bridges, MT, Ruby Valley Field, Takeoff Minimums and Obstacle DP, Orig-A
New Town, ND, 05D, RNAV (GPS) RWY 12, Orig
New Town, ND, 05D, RNAV (GPS) RWY 30, Orig
Norfolk, NE, Norfolk Rgnl/Karl Stefan Memorial Fld, VOR RWY 14, Amdt 8A
Norfolk, NE, Norfolk Rgnl/Karl Stefan Memorial Fld, VOR RWY 32, Amdt 8A
Wellsville, NY, Wellsville Muni—Tarantine Fld, RNAV (GPS) RWY 10, Amdt 1A
Wellsville, NY, Wellsville Muni—Tarantine Fld, RNAV (GPS) RWY 28, Amdt 1B
Wellsville, NY, Wellsville Muni—Tarantine Fld, Takeoff Minimums and Obstacle DP, Amdt 2A
Newark, OH, KVTA, LOC RWY 9, Orig–B
Newark, OH, KVTA, VOR–A, Amdt 13B
Durant, OK, Durant Rgnl—Eaker Field, VOR RWY 35, Amdt 1, CANCELLED
Butler, PA, KBTP, ILS OR LOC RWY 8, Amdt 10
Punxsutawney, PA, Punxsutawney Muni, VOR/DME–A, Amdt 1B, CANCELLED
Watertown, SD, KATY, LOC BC RWY 17, Amdt 11A
Watertown, SD, KATY, VOR OR TACAN RWY 17, Amdt 17B
Denton, TX, Denton Enterprise, ILS OR LOC RWY 18, Amdt 9B, CANCELLED
Denton, TX, Denton Enterprise, ILS OR LOC RWY 18L, Orig
Denton, TX, Denton Enterprise, NDB RWY 18, Amdt 7B, CANCELLED
Denton, TX, Denton Enterprise, RNAV (GPS) RWY 18, ORIG–B, CANCELLED
Denton, TX, Denton Enterprise, RNAV (GPS) RWY 18L, ORIG
Denton, TX, Denton Enterprise, RNAV (GPS) RWY 18R, ORIG
Denton, TX, Denton Enterprise, RNAV (GPS) RWY 36, Amdt 2C, CANCELLED
Denton, TX, Denton Enterprise, RNAV (GPS) RWY 36L, ORIG
Denton, TX, KDTO, RNAV (GPS) RWY 36R, ORIG
Sherman, TX, KSWI, RNAV (GPS) RWY 16, Orig–B
Sherman/Denison, TX, North Texas Rgnl/Perrin Field, RNAV (GPS) RWY 35R, Orig–C
Cedar City, UT, Cedar City Rgnl, ILS OR LOC RWY 20, Amdt 5
Cedar City, UT, Cedar City Rgnl, RNAV (GPS) RWY 2, Orig
Cedar City, UT, Cedar City Rgnl, RNAV (GPS) RWY 20, Amdt 2
Cedar City, UT, Cedar City Rgnl, VOR RWY 20, Amdt 8
Petersburg, WV, W99, COPTER RNAV (GPS) X RWY 31, Orig–A

[FR Doc. 2020–23957 Filed 10–30–20; 8:45 am]

BILLING CODE 4910–13–P

DEPARTMENT OF TRANSPORTATION

Federal Aviation Administration

14 CFR Part 97

[Docket No. 31338; Amdt. No. 3928]

Standard Instrument Approach Procedures, and Takeoff Minimums and Obstacle Departure Procedures; Miscellaneous Amendments

AGENCY: Federal Aviation Administration (FAA), DOT.

ACTION: Final rule.

SUMMARY: This rule amends, suspends, or removes Standard Instrument Approach Procedures (SIAPs) and associated Takeoff Minimums and Obstacle Departure Procedures for operations at certain airports. These regulatory actions are needed because of the adoption of new or revised criteria, or because of changes occurring in the National Airspace System, such as the commissioning of new navigational facilities, adding new obstacles, or changing air traffic requirements. These changes are designed to provide for the safe and efficient use of the navigable airspace and to promote safe flight operations under instrument flight rules at the affected airports.

DATES: This rule is effective November 2, 2020. The compliance date for each SIAP, associated Takeoff Minimums, and ODP is specified in the amendatory provisions.

The incorporation by reference of certain publications listed in the regulations is approved by the Director of the Federal Register as of November 2, 2020.

ADDRESSES: Availability of matter incorporated by reference in the amendment is as follows:

For Examination

1. U.S. Department of Transportation, Docket Ops–M30, 1200 New Jersey Avenue SE, West Bldg., Ground Floor, Washington, DC 20590–0001;
2. The FAA Air Traffic Organization Service Area in which the affected airport is located;
3. The office of Aeronautical Navigation Products, 6500 South MacArthur Blvd., Oklahoma City, OK 73169 or,
4. The National Archives and Records Administration (NARA). For information on the availability of this material at NARA, email *fedreg.legal@nara.gov* or go to: *https://www.archives.gov/federal-register/cfr/ibr-locations.html.*

Availability

All SIAPs and Takeoff Minimums and ODPs are available online free of charge. Visit the National Flight Data Center online at *nfdc.faa.gov* to register. Additionally, individual SIAP and Takeoff Minimums and ODP copies may be obtained from the FAA Air Traffic Organization Service Area in which the affected airport is located.

FOR FURTHER INFORMATION CONTACT: Thomas J. Nichols, Flight Procedures and Airspace Group, Flight Technologies and Procedures Division, Flight Standards Service, Federal Aviation Administration. Mailing Address: FAA Mike Monroney Aeronautical Center, Flight Procedures and Airspace Group, 6500 South MacArthur Blvd., Registry Bldg. 29, Room 104, Oklahoma City, OK 73169. Telephone: (405) 954–4164.

SUPPLEMENTARY INFORMATION: This rule amends 14 CFR part 97 by amending the referenced SIAPs. The complete regulatory description of each SIAP is listed on the appropriate FAA Form 8260, as modified by the National Flight Data Center (NFDC)/Permanent Notice to Airmen (P–NOTAM), and is incorporated by reference under 5 U.S.C. 552(a), 1 CFR part 51, and 14

CFR 97.20. The large number of SIAPs, their complex nature, and the need for a special format make their verbatim publication in the **Federal Register** expensive and impractical. Further, airmen do not use the regulatory text of the SIAPs, but refer to their graphic depiction on charts printed by publishers of aeronautical materials. Thus, the advantages of incorporation by reference are realized and publication of the complete description of each SIAP contained on FAA form documents is unnecessary. This amendment provides the affected CFR sections, and specifies the SIAPs and Takeoff Minimums and ODPs with their applicable effective dates. This amendment also identifies the airport and its location, the procedure and the amendment number.

Availability and Summary of Material Incorporated by Reference

The material incorporated by reference is publicly available as listed in the **ADDRESSES** section.

The material incorporated by reference describes SIAPs, Takeoff Minimums and ODPs as identified in the amendatory language for part 97 of this final rule.

The Rule

This amendment to 14 CFR part 97 is effective upon publication of each separate SIAP and Takeoff Minimums and ODP as amended in the transmittal. For safety and timeliness of change considerations, this amendment incorporates only specific changes contained for each SIAP and Takeoff Minimums and ODP as modified by FDC permanent NOTAMs.

The SIAPs and Takeoff Minimums and ODPs, as modified by FDC permanent NOTAM, and contained in this amendment are based on the criteria contained in the U.S. Standard for Terminal Instrument Procedures (TERPS). In developing these changes to SIAPs and Takeoff Minimums and ODPs, the TERPS criteria were applied only to specific conditions existing at the affected airports. All SIAP amendments in this rule have been previously issued by the FAA in a FDC NOTAM as an emergency action of immediate flight safety relating directly to published aeronautical charts.

The circumstances that created the need for these SIAP and Takeoff Minimums and ODP amendments require making them effective in less than 30 days.

Because of the close and immediate relationship between these SIAPs, Takeoff Minimums and ODPs, and safety in air commerce, I find that notice and public procedure under 5 U.S.C. 553(b) are impracticable and contrary to the public interest and, where applicable, under 5 U.S.C. 553(d), good cause exists for making these SIAPs effective in less than 30 days.

The FAA has determined that this regulation only involves an established body of technical regulations for which frequent and routine amendments are necessary to keep them operationally current. It, therefore—(1) is not a ''significant regulatory action'' under Executive Order 12866;(2) is not a ''significant rule'' under DOT regulatory Policies and Procedures (44 FR 11034; February 26, 1979); and (3) does not warrant preparation of a regulatory evaluation as the anticipated impact is so minimal. For the same reason, the FAA certifies that this amendment will not have a significant economic impact on a substantial number of small entities under the criteria of the Regulatory Flexibility Act.

List of Subjects in 14 CFR Part 97

Air Traffic Control, Airports, Incorporation by reference, Navigation (Air).

Issued in Washington, DC, on October 16, 2020.

Wade Terrell,

Aviation Safety Manager, Flight Procedures & Airspace Group Flight Technologies and Procedures Division.

Adoption of the Amendment

Accordingly, pursuant to the authority delegated to me, Title 14, Code of Federal regulations, Part 97, (14 CFR part 97), is amended by amending Standard Instrument Approach Procedures and Takeoff Minimums and ODPs, effective at 0901 UTC on the dates specified, as follows:

PART 97—STANDARD INSTRUMENT APPROACH PROCEDURES

■ 1. The authority citation for part 97 continues to read as follows:

Authority: 49 U.S.C. 106(f), 106(g), 40103, 40106, 40113, 40114, 40120, 44502, 44514, 44701, 44719, 44721–44722.

■ 2. Part 97 is amended to read as follows:

By amending: § 97.23 VOR, VOR/DME, VOR or TACAN, and VOR/DME or TACAN; § 97.25 LOC, LOC/DME, LDA, LDA/DME, SDF, SDF/DME; § 97.27 NDB, NDB/DME; § 97.29 ILS, ILS/DME, MLS, MLS/DME, MLS/RNAV; § 97.31RADAR SIAPs; § 97.33 RNAV SIAPs; and § 97.35 COPTER SIAPs, Identified as follows:

* * * Effective Upon Publication

AIRAC date	State	City	Airport	FDC No.	FDC date	Subject
3-Dec-20	RI	Providence	Theodore Francis Green State	0/1063	10/2/20	RNAV (GPS) RWY 16, Orig-F.
3-Dec-20	KS	Smith Center	Smith Center Muni	0/1520	10/6/20	RNAV (GPS) RWY 18, Amdt 1.
3-Dec-20	KS	Smith Center	Smith Center Muni	0/1521	10/6/20	RNAV (GPS) RWY 36, Amdt 1.
3-Dec-20	KS	Smith Center	Smith Center Muni	0/1534	10/6/20	VOR–A, Amdt 3.
3-Dec-20	KS	Smith Center	Smith Center Muni	0/1537	10/6/20	RNAV (GPS) RWY 14, Orig-B.
3-Dec-20	KS	Smith Center	Smith Center Muni	0/1538	10/6/20	RNAV (GPS) RWY 32, Orig-B.
3-Dec-20	AZ	Clifton/Morenci	Greenlee County	0/7354	9/22/20	RNAV (GPS)-A, Orig-A.
3-Dec-20	OH	Wadsworth	Wadsworth Muni	0/7985	10/6/20	RNAV (GPS) RWY 2, Amdt 2.
3-Dec-20	OH	Wadsworth	Wadsworth Muni	0/7987	10/6/20	RNAV (GPS) RWY 20, Amdt 2.
3-Dec-20	MN	Mankato	Mankato Rgnl	0/8592	10/7/20	ILS OR LOC RWY 33, Amdt 1A.
3-Dec-20	MN	Mankato	Mankato Rgnl	0/8593	10/7/20	COPTER ILS OR LOC RWY 33, Orig-C.
3-Dec-20	CA	Riverside	Riverside Muni	0/8632	9/22/20	RNAV (GPS) RWY 27, Orig.

AIRAC date	State	City	Airport	FDC No.	FDC date	Subject
3-Dec-20	CA	Riverside	Riverside Muni	0/8633	9/22/20	VOR RWY 9, Amdt 1B.
3-Dec-20	CA	Riverside	Riverside Muni	0/8634	9/22/20	VOR–A, Orig-A.

[FR Doc. 2020–23958 Filed 10–30–20; 8:45 am]

BILLING CODE 4910–13–P

DEPARTMENT OF JUSTICE

Drug Enforcement Administration

21 CFR Parts 1301 and 1306

[Docket No. DEA–499]

RIN 1117–AB55

Implementation of the Substance Use-Disorder Prevention That Promotes Opioid Recovery and Treatment for Patients and Communities Act of 2018: Dispensing and Administering Controlled Substances for Medication-Assisted Treatment

AGENCY: Drug Enforcement Administration, Department of Justice.

ACTION: Interim final rule with request for comments.

SUMMARY: The ''Substance Use-Disorder Prevention that Promotes Opioid Recovery and Treatment for Patients and Communities Act of 2018 (the SUPPORT Act),'' which became law on October 24, 2018, amended the Controlled Substances Act to expand the conditions a practitioner must meet to provide medication-assisted treatment and expand the options available for a physician to be considered a qualifying physician. The SUPPORT Act removed the time period for a nurse practitioner or physician assistant to be considered a qualifying other practitioner, and revised the definition of a qualifying practitioner. The SUPPORT Act also allows a pharmacy to deliver prescribed controlled substances to a practitioner's registered location for the purpose of maintenance or detoxification treatment to be administered under certain conditions by a practitioner. The Drug Enforcement Administration amends its regulations to make them consistent with the SUPPORT Act and implement its requirements.

DATES: This interim final rule is effective on October 30, 2020. Electronic comments must be submitted, and written comments must be postmarked, on or before January 4, 2021.

ADDRESSES: To ensure proper handling of comments, please reference ''RIN 1117–AB55 Docket No. DEA–499'' on all correspondence, including any attachments.

- *Electronic comments:* The Drug Enforcement Administration encourages that all comments be submitted electronically through the Federal eRulemaking Portal, which provides the ability to type short comments directly into the comment field on the web page or attach a file for lengthier comments. Please go to *http://www.regulations.gov* and follow the online instructions at that site for submitting comments. Upon completion of your submission, you will receive a Comment Tracking Number for your comment. Please be aware that submitted comments are not instantaneously available for public view on *http://www.regulations.gov.* If you have received a Comment Tracking Number, your comment has been successfully submitted, and there is no need to resubmit the same comment. Commenters should be aware that the electronic Federal Docket Management System will not accept comments after 11:59 p.m. Eastern Time on the last day of the comment period.
- *Paper comments:* Paper comments that duplicate the electronic submission are not necessary and are discouraged. Should you wish to mail a paper comment *in lieu* of an electronic comment, it should be sent via regular or express mail to: Drug Enforcement Administration, Attn: DEA **Federal Register** Representative/DPW, Diversion Control Division; Mailing Address: 8701 Morrissette Drive, Springfield, VA 22152.

FOR FURTHER INFORMATION CONTACT: Scott A. Brinks, Regulatory Drafting and Policy Support Section (DPW) Diversion Control Division, Drug Enforcement Administration; Mailing Address: 8701 Morrissette Drive, Springfield, Virginia 22152; Telephone: (571) 362–3261.

SUPPLEMENTARY INFORMATION:

Posting of Public Comments

Please note that all comments received are considered part of the public record. They will, unless reasonable cause is given, be made available by the Drug Enforcement Administration (DEA) for public inspection online at *http://www.regulations.gov.* Such information includes personal identifying information (such as your name, address, etc.) voluntarily submitted by the commenter. The Freedom of Information Act applies to all comments received. If you want to submit personal identifying information (such as your name, address, etc.) as part of your comment, but do not want it to be made publicly available, you must include the phrase ''PERSONAL IDENTIFYING INFORMATION'' in the first paragraph of your comment. You must also place all of the personal identifying information you do not want made publicly available in the first paragraph of your comment and identify what information you want redacted.

If you want to submit confidential business information as part of your comment, but do not want it to be made publicly available, you must include the phrase ''CONFIDENTIAL BUSINESS INFORMATION'' in the first paragraph of your comment. You must also prominently identify the confidential business information to be redacted within the comment.

Comments containing personal identifying information and confidential business information identified as directed above will generally be made publicly available in redacted form. If a comment has so much confidential business information or personal identifying information that it cannot be effectively redacted, all or part of that comment may not be made publicly available. Comments posted to *http://www.regulations.gov* may include any personal identifying information (such as name, address, and phone number) included in the text of your electronic submission that is not identified as directed above as confidential.

An electronic copy of this interim final rule is available at *http://www.regulations.gov* under FDMS Docket ID: DEA–499 (RIN 1117–AB55/Docket Number DEA–499) for ease of reference.

Legal Authority

Pertinent Provisions of the SUPPORT Act

On October 24, 2018, the President signed the SUPPORT Act into law as Public Law 115–271. Sections 3201 and 3202 of the SUPPORT Act amended certain provisions of 21 U.S.C. 823(g)(2), which is the subsection of the Controlled Substances Act (CSA) that sets forth the conditions under which a practitioner may, without being separately registered under subsection 823(g)(1), dispense a narcotic drug in

schedule III, IV, or V for the purpose of maintenance treatment [1] or detoxification treatment.[2] Section 3204 of the SUPPORT Act amended the CSA by adding section 309A (21 U.S.C. 829a), which sets forth the conditions under which a pharmacy may deliver a controlled substance to an administering practitioner. All of the changes to the CSA, from these sections of the SUPPORT Act, will be fully described below.

Background

Opioid Abuse and Treatment Need

Opioid abuse and addiction in the United States continues to impact disparate communities and populations. According to the report ''Key Substance Use and Mental Health Indicators in the United States: Results from the 2018 National Survey on Drug Use and Health'' released by the Substance Abuse and Mental Health Services Administration (SAMHSA), an estimated 2 million people (0.7 percent of the population) aged 12 or older had an opioid use disorder (OUD) in 2018.[3] The share of the population estimated to have had an OUD in 2015, 2016, and 2017 was 0.9 percent, 0.8 percent, and 0.8 percent, respectively. Among people aged 12 or older with an OUD in 2018, about 400,000 received treatment at a specialty facility in the past year, or 19.7 percent of all those with an OUD. The percentage of those with an OUD that received treatment at a specialty facility in 2015, 2016, and 2017 was estimated to be 21.7 percent, 21.1 percent, and 28.6 percent, respectively.

According to the Department of Health and Human Services (HHS) Office of Inspector General (OIG) report titled ''Geographic Disparities Affect Access to Buprenorphine Services for Opioid Use Disorder'' published in January, 2020, 40 percent of U.S. counties have no ''DATA-waived'' providers,[4] and another 24 percent have low patient capacity.[5] The provisions of the SUPPORT Act being implemented into DEA regulation by this interim final rule directly address this bottleneck in available providers, and provider capacity by increasing the total number of providers eligible to prescribe buprenorphine to OUD patients.

Additional Flexibility Regarding the Patient Limit for Purposes of 21 U.S.C. 823(g)(2)

Section 3201(a) of the SUPPORT Act amended the CSA, 21 U.S.C. 823(g)(2)(B)(iii)(II), to provide flexibility to practitioners regarding the number of patients they may treat, without being separately registered as a narcotic treatment program, by adding more opportunities to increase the applicable number of patients that may be treated to 100. In general, the applicable number of patients that may be treated at one time is 30. Prior to the SUPPORT Act, the CSA set the applicable number of patients a practitioner may treat at 100 only when a practitioner submitted a second notification to the Secretary of HHS for the need and intent of the practitioner to treat up to 100 patients, no sooner than one year after the date on which the initial notification was submitted.

After promulgation of the SUPPORT Act, a practitioner may treat up to 100 patients under two additional circumstances: (1) If the practitioner holds additional credentialing,[6] or (2) if a practitioner provides medication-assisted treatment [7] using covered medications [8] in a qualified practice setting.[9]

Section 3201(a) also allows a practitioner to treat more patients, increasing the applicable number to 275 patients if a practitioner meets the requirements set forth in 42 CFR 8.610–8.655. DEA added this additional applicable number to its regulations in a January 2018 final rule,[10] to reflect new limits set by HHS in a July 2016 final rule.[11] Under this rule, DEA is updating the regulations to reflect the new description in section 3201(a).

DEA is implementing these changes to the CSA by revising DEA regulations in 21 CFR 1301.28(b)(1)(iii)(B)–(C).

Elimination of Time Limit for Certain Qualifying Practitioners and Expanding the Definition of Qualifying Other Practitioner

The CSA mandates that a practitioner who dispenses narcotic drugs for maintenance treatment or detoxification treatment must be a qualifying practitioner. 21 U.S.C. 823(g)(2)(B)(i). Prior to the SUPPORT Act, the CSA defined a qualifying practitioner, under 21 U.S.C. 823(g)(2)(G)(iii), as a qualifying physician [12] and also temporarily (until October 1, 2021) as a ''qualifying other practitioner,'' which included a nurse practitioner or physician assistant who meets certain qualifications set forth in 21 U.S.C. 823(g)(2)(G)(iv). Sections 3201(b) through (d) of the SUPPORT Act updated the CSA to by permanently allowing a nurse practitioner or a physician assistant to be considered a ''qualifying other practitioner,'' and temporarily (until October 1, 2023) expanding the definition of a ''qualifying practitioner'' to also include a clinical nurse specialist, certified registered nurse anesthetist, or a certified nurse midwife who meets certain qualifications set forth in 21 U.S.C. 823(g)(2)(G)(iv), allowing more flexibility. Those qualifications for clinical nurse specialists, certified registered nurses, or certified nurse midwives, pertaining to training, experience, and supervision, are the

[1] 21 U.S.C. 802(29) defines *maintenance treatment* as the dispensing, for a period in excess of twenty-one days, of a narcotic drug in the treatment of an individual for dependence upon heroin or other morphine-like drugs.

[2] 21 U.S.C. 802(30) defines *detoxification treatment* as the dispensing, for a period not in excess of one hundred and eighty days, of a narcotic drug in decreasing doses to an individual in order to alleviate adverse physiological or psychological effects incident to withdrawal from the continuous or sustained use of a narcotic drug and as a method of bringing the individual to a narcotic drug-free state within such period.

[3] U.S. Department of Health and Human Services. SAMHSA. Key Substance Use and Mental Health Indicators in the United States: Results from the 2018 National Survey on Drug Use and Health. 2019.

[4] On October 17, 2000, Congress passed the Drug Addiction Treatment Act of 2000 (DATA), amending the CSA to establish ''waiver authority for physicians who dispense or prescribe certain narcotic drugs for maintenance treatment or detoxification treatment'' (Pub. L. 106–310, title XXXV; 114 Stat. 1222). Prior to DATA, the CSA and DEA regulations required practitioners who wanted to conduct maintenance or detoxification treatment using narcotic controlled drugs to be registered as a Narcotic Treatment Program (NTP) in addition to the practitioner's personal registration. Hence, the term ''DATA-waived'' is used to describe individual practitioners (physicians, nurse practitioners, physician assistants, clinical nurse specialists, certified registered nurse anesthetists, and certified nurse midwives) who, having received an identification number from DEA, are exempt from separate registration for dispensing or prescribing schedule III, IV, or V narcotic controlled drugs approved by the Food and Drug Administration specifically for use in maintenance or detoxification treatment per 21 CFR 1301.28.

[5] Office of Inspector General, HHS, 2020. *Geographic Disparities Affect Access To Buprenorphine Services For Opioid Use Disorder.* U.S. Department of Health and Human Services.

[6] ''Additional credentialing'' is defined as ''board certification in addiction medicine or addiction psychiatry by the American Board of Addiction Medicine, the American Board of Medical Specialties, or the American Osteopathic Association or certification by the American Board of Addiction Medicine, or the American Society of Addiction Medicine.'' 42 CFR 8.2.

[7] 42 CFR 8.2 defines *medication-assisted treatment* as the use of medication in combination with behavioral health services to provide an individualized approach to the treatment of substance use disorder, including opioid use disorder.

[8] ''Covered medications'' are ''the drugs or combinations of drugs that are covered under 21 U.S.C. 823(g)(2)(C).'' 42 CFR 8.2.

[9] A ''qualified practice setting'' is described in 42 CFR 8.615.

[10] 83 FR 3071, January 23, 2018.

[11] 81 FR 44712, July 8, 2016.

[12] The CSA defines a ''qualifying physician'' as a physician who is licensed under State law and who meets one or more of certain listed conditions. 21 U.S.C. 823(g)(2)(G)(ii).

same as those that previously only applied to nurse practitioners or physician assistants.

DEA is implementing these changes to the CSA by revising DEA regulations in 21 CFR 1301.28(b)(1)(i).

New Option To Allow a Physician To Become a Qualifying Physician

Section 3202(a) of the SUPPORT Act amended 21 U.S.C. 823(g)(2)(G)(ii) by adding a new option for a physician to be considered a ''qualifying physician.'' Prior to the SUPPORT Act, a physician could become a qualifying physician through seven different options. The additional option allows a physician to be considered a qualifying physician if they graduated in good standing from an accredited school of allopathic medicine or osteopathic medicine in the United States within the five-year period immediately preceding the date that the physician submitted a written notification to the Secretary of HHS of their intent to dispense narcotic drugs for maintenance or detoxification treatment, and successfully completed a comprehensive allopathic or osteopathic medicine curriculum or accredited medical residency. This curriculum or residency must have included at least eight hours of training on treating and managing opioid-dependent patients, and, at a minimum, included training described in 21 U.S.C. 823(g)(2)(G)(IV)(aa)–(gg), and any other training the Secretary of HHS determines should be included in the curriculum, including training on pain management, and the assessment and appropriate use of opioid and non-opioid alternatives. The SUPPORT Act added this training requirement to the CSA at 21 U.S.C. 823(g)(G)(ii)(VIII), however, there is no corresponding regulation in the Code of Federal Regulations that DEA needs to revise and update because the definition of ''qualifying physician'' is only referred to in the regulations. *See* 21 CFR 1301.28 (b)(1)(i).

Dispensing Controlled Substances for Maintenance or Detoxification Treatment

Section 3204(a) of the SUPPORT Act amended the CSA by adding section 309A (21 U.S.C. 829a), which sets forth the conditions in which a pharmacy may deliver a controlled substance to an administering practitioner. Specifically, the new section 829a allows a pharmacy to deliver, notwithstanding the definition of dispense (21 U.S.C. 802(10)),[13] a prescribed controlled substance (that meets the requirements issued by the Attorney General under title 21 of the U.S.C.) to the prescribing practitioner's or administering practitioner's registered location for the purpose of maintenance or detoxification treatment to be administered to a patient under specific conditions. Prior to this new section 829a, pharmacies were only allowed to deliver controlled substances to the ultimate user or research subject.

Under section 829a, a pharmacy is allowed to dispense prescribed narcotic drugs in schedule III, IV, or V, or combinations of such drugs, to a practitioner for the purpose of maintenance or detoxification treatment under 21 U.S.C. 823(g)(2) and certain conditions. Specifically, the prescription must be issued by a qualifying practitioner and the prescription issued cannot be used to supply any practitioner with a stock of controlled substances for the purpose of general dispensing to patients. In addition, the practitioner must meet the following conditions:

1. The practitioner must administer the controlled substance to the patient named on the prescription:

a. By implantation or injection;

b. within 14 days after the date of receipt of the controlled substance by the practitioner.

2. The practitioner and pharmacy are authorized to conduct these activities in the State in which such activities take place.

3. The prescribing practitioner and administering practitioner of the controlled substance maintain complete and accurate records of all controlled substances delivered, received, administered, and disposed including the persons to whom controlled substances were delivered and such other information that the Attorney General may require by regulations.

Regulatory Analysis

Administrative Procedure Act

An agency may find good cause to exempt a rule from certain provisions of the Administrative Procedure Act (APA) (5 U.S.C. 553), including those requiring the publication of a prior notice of proposed rulemaking and the pre-promulgation opportunity for public comment, if such actions are determined to be unnecessary, impracticable, or contrary to the public interest.

DEA finds there is good cause within the meaning of the APA to issue these amendments as an interim final rule and to delay comment procedures to the post-publication period, because these amendments merely conform the implementing regulations with recent amendments to the CSA that have already taken effect. DEA has no discretion with respect to these amendments. This rule merely incorporates the statutory amendments into DEA's regulations, and publishing a notice of proposed rulemaking or soliciting public comment prior to publication is unnecessary. *See* 5 U.S.C. 553(b)(B) (relating to notice and comment procedures). ''[W]hen regulations merely restate the statute they implement, notice-and-comment procedures are unnecessary.'' *Gray Panthers Advocacy Committee* v. *Sullivan,* 936 F.2d 1284, 1291 (D.C. Cir. 1991); *see also United States* v. *Cain,* 583 F.3d 408, 420 (6th Cir. 2009) (contrasting legislative rules, which require notice-and-comment procedures, ''with regulations that merely restate or interpret statutory obligations,'' which do not); *Komjathy* v. *Nat. Trans. Safety Bd.,* 832 F.2d 1294, 1296 (D.C. Cir. 1987) (when a rule ''does no more than repeat, virtually verbatim, the statutory grant of authority'' notice-and-comment procedures are not required).

In addition, because the statutory changes at issue have already been in effect since October 24, 2018, DEA finds good cause exists to make this rule effective immediately upon publication. *See* 5 U.S.C. 553(d). Therefore, DEA is issuing these amendments as an interim final rule, effective October 30, 2020. DEA is publishing this rule as an interim final rule and is establishing a docket to receive public comment on this rule. To the extent required by law, DEA will consider and respond to any relevant comments received.

As explained above, DEA is obligated to issue this interim final rule to revise its regulations so that they are consistent with the provisions of the CSA that were amended by the SUPPORT Act. In issuing this interim final rule, DEA has not gone beyond the statutory text enacted by Congress. Thus, DEA would have to issue this interim final rule regardless of the outcome of the agency's regulatory analysis. Nonetheless, DEA conducted this analysis as discussed below.

[13] The term dispense means to deliver a controlled substance to an ultimate user or research subject by, or pursuant to the lawful order of, a practitioner including the prescribing and administering of a controlled substance and the packaging, labeling, or compounding necessary to prepare the substance for such delivery 21 U.S.C. 802(10).

Executive Orders 12866 (Regulatory Planning and Review), 13563 (Improving Regulation and Regulatory Review), and 13771 (Reducing Regulation and Controlling Regulatory Costs)

This interim final rule was developed in accordance with the principles of Executive Orders (E.O.) 12866 and 13563. E.O. 12866 directs agencies to assess all costs and benefits of available regulatory alternatives and, if regulation is necessary, to select regulatory approaches that maximize net benefits (including potential economic, environmental, public health, and safety effects; distributive impacts; and equity). E.O. 13563 is supplemental to and reaffirms the principles, structures, and definitions governing regulatory review as established in E.O. 12866. E.O. 12866 classifies a ''significant regulatory action,'' requiring review by the Office of Management and Budget (OMB), as any regulatory action that is likely to result in a rule that may: (1) Have an annual effect on the economy of $100 million or more or adversely affect in a material way the economy, a sector of the economy, productivity, competition, jobs, the environment, public health or safety, or State, local, or tribal governments or communities; (2) create a serious inconsistency or otherwise interfere with an action taken or planned by another agency; (3) materially alter the budgetary impact of entitlements, grants, user fees, or loan programs or the rights and obligations of recipients thereof; or (4) raise novel legal or policy issues arising out of legal mandates, the President's priorities, or the principles set forth in the E.O.

The economic, interagency, budgetary, legal, and policy implications of this interim final rule have been examined and it has been determined to be an economically significant regulatory action under E.O. 12866 with a net annualized benefit of $543 million over five years, and therefore, has been submitted to OMB for review.

E.O. 13771, titled ''Reducing Regulation and Controlling Regulatory Costs,'' was issued on January 30, 2017, and published in the **Federal Register** on February 3, 2017. 82 FR 9339. Section 2(a) of E.O. 13771 requires an agency, unless prohibited by law, to identify at least two existing regulations to be repealed when the agency publicly proposes for notice and comment or otherwise promulgates a new regulation. In furtherance of this requirement, section 2(c) of E.O. 13771 requires that the new incremental costs associated with new regulations, to the extent permitted by law, be offset by the elimination of existing costs associated with at least two prior regulations. Guidance from OMB, issued on April 5, 2017, explains that the above requirements only apply to each new ''significant regulatory action that . . . imposes costs.''

DEA estimates that this interim final rule will expand the number of DATA-waived treatment providers, qualifying it as an ''enabling rule'' according to E.O. 13771 guidance from OMB issued on April 5, 2017. Therefore, DEA expects that this interim final rule will be classified as an E.O. 13771 deregulatory action by OMB.

A. Need for the Rule

On October 24, 2018, the SUPPORT Act became law. With this interim final rule, DEA is amending its regulations governing providers of medication-assisted treatment (MAT) to incorporate statutory changes made to the CSA by the SUPPORT Act.

B. Alternative Approaches

This interim final rule amends DEA regulations only to the extent necessary to be consistent with current Federal law as modified by the SUPPORT Act. Because DEA is obligated to implement these provisions of the SUPPORT Act, DEA has no discretion not to amend its regulations as is being done in this interim final rule. Indeed, the new provisions issued under this interim final rule are already in effect by virtue of the SUPPORT Act, and this interim final rule simply updates DEA regulations to reflect these new provisions; thus, no alternative approaches are possible.

C. Analysis of Benefits and Costs

This analysis is limited to the provisions of the interim final rule implementing into regulation the following statutory changes of the SUPPORT Act: Revising the definition of a qualifying practitioner, permanently allowing a nurse practitioner (NP) or physician assistant (PA) to be considered a qualifying other practitioner, expanding the options available for a physician to be considered a qualifying physician, and allowing a pharmacy to deliver prescribed controlled substances to a practitioner's registered location for the purpose of maintenance or detoxification treatment.

Benefits of the interim final rule, in the form of economic burden reductions and other cost savings (health care costs, criminal justice costs, and lost productivity costs), are expected from permanently allowing NPs or PAs to dispense narcotic drugs for maintenance and detoxification treatment, and from granting qualified clinical nurse specialists (CNS), certified registered nurse anesthetists (CRNA), and certified nurse midwives (CNM) the same dispensing privileges as NPs and PAs for a five year period ending on October 1, 2023. These benefits are significant and are quantified in the following analysis and discussion. DEA anticipates the expansion of the categories of practitioners will lead to an increase in the number of treatment providers, and to an increase in the number of patients (who did not have access to treatment prior to this rule) treated, resulting in a reduction in the economic burden of opioid abuse. DEA also expects benefits by allowing maintenance or detoxification treatment providers to treat up to 100 patients, expanding the options available for a physician to be considered a qualifying physician, and allowing a pharmacy to deliver prescribed controlled substances to a practitioner's registered location for the purpose of maintenance or detoxification treatment. These benefits will be discussed qualitatively in the following analysis.

Costs of the interim final rule are associated with the treatment cost of opioid addicted patients and the cost to practitioners of obtaining authority to dispense a narcotic drug in schedule III, IV, or V for the purpose of maintenance or detoxification treatment. The costs of obtaining dispensing authority and treating patients are required to generate the benefits of the rule, and thus, are included in this analysis. Although the new treatment providers in the expanded category and qualifying other practitioners will also need to comply with treatment-specific recordkeeping requirements, the cost of compliance is included in the estimated cost of treatment as explained in the section ''Other Potential Costs.'' DEA also estimates that there will be a cost savings resulting from patients being able to access buprenorphine treatment through treatment providers that are not physicians. Finally, there is potential for added risk of diversion from more practitioners having the authority to dispense narcotic drugs in schedule III, IV, or V for the purpose of maintenance or detoxification treatment. This risk is discussed in the section ''Risk of Diversion.''

Increase in the Number of Data-Waived Providers Eligible To Treat 100 Patients

Section 3201(a) of the SUPPORT Act amended the CSA, specifically 21 U.S.C. 823(g)(2)(B)(iii)(II), to allow for additional circumstances in which

DATA-waived providers may treat up to 100 patients for maintenance and detoxification treatment, instead of the default 30 patient limit. Prior to the SUPPORT Act, providers were required to wait one year before notifying SAMHSA of their desire to increase their DATA-waived patient limit to 100. Now, DATA-waived practitioners may immediately treat up to 100 patients if the practitioner holds additional credentialing in addiction medicine, or provides MAT using covered medications, in a qualified practice setting. This provision only affected qualifying practitioners that became immediately eligible in the first year after the SUPPORT Act became law, and the following analysis is limited to this group of practitioners.

DEA assumes that there are some qualifying practitioners that, within the first year of obtaining a DATA-waiver, quickly reach the 30 patient limit. These high-capacity MAT providers were most likely to benefit from the additional flexibility provided by the SUPPORT Act by beginning to treat up to 100 patients immediately rather than waiting a full year. DEA does not have a good basis to estimate the number of qualifying practitioners who took advantage of this flexibility within the first year of the SUPPORT Act becoming law; however, it is believed to be minimal for two reasons. First, in general, DEA believes it is unlikely that many practitioners develop a capacity to treat more than 30 MAT patients within their first 12 months of obtaining a DATA-waiver. There are many factors that influence how many patients a DATA-waived practitioner's treats, including, but not limited to patient demand for treatment; insufficient time, staff, and office space; [14] Medicaid and insurance reimbursement rates; [15] and a regulatory environment perceived to be overly burdensome.[16] The vast majority of newly-DATA-waived providers are likely to be conservative in the first year of delivering MAT as they consider these factors and navigate a changing regulatory environment, whether they have advanced training in addiction medicine or not.

Second, for qualifying practitioners that do take on up to 30 patients in their first year of practicing, it is not likely that they are able to build their patient base to an amount greater than 30 before they would have previously been eligible to apply for the 100-patient DATA-waiver. DEA assumes that the growth in patients under treatment for any qualifying practitioner advances quickly in the beginning, but slows and eventually levels off as their practice matures. A recent academic study supports this, finding that practitioners possessing DATA-waivers to treat up to 100 patients (therefore having been DATA-waived for at least one full year) do not approach this limit, and instead have an average monthly patient census of 42.9.[17] Thus, DEA believes it is reasonable to assume that if a high-capacity practitioner reached the 30 patient limit within the first year of the SUPPORT Act becoming law, it is not likely that practitioner was able to expand their number of patients under treatment to more than 30 before they would have been previously eligible for a 100-patient waiver prior to this provision of the SUPPORT Act.

Since DEA does not have a good basis for estimating the number of practitioners that qualified, nor how many more patients these high-capacity practitioners treated in their first year of becoming DATA-waived after the SUPPORT Act became law, DEA is unable to quantify the benefit of this enabling provision.

Permanently Allowing Nurse Practitioners and Physician Assistants To Practice as ''Qualifying Practitioners''

The SUPPORT Act makes permanent the five-year temporary exception for NPs and PAs to become DATA-waived and practice as ''Qualifying Practitioners,'' originally authorized by the Comprehensive Addiction and Recovery Act (CARA) of 2016. The temporary authorization was incorporated into DEA regulations through promulgation of a 2018 final rule.[18] DEA's analysis of the benefits and costs of this 2018 final rule concluded that all qualified NPs and PAs that would become DATA-waived would do so in the first two years of eligibility (July 22, 2016 to September 30, 2018),[19] as the temporary nature of the exception and uncertainty of the long-term status of this group's eligibility would disincentivize their investment in becoming DATA-waived in years three through five. This temporary exception for NPs and PAs was made permanent by the SUPPORT Act at the beginning of their third year of eligibility, thus incentivizing this group's long-term investment in obtaining DATA-waivers.

Absent the permanent eligibility granted to NPs and PAs by the SUPPORT Act, the DATA-waivers of all ''Qualifying Practitioners'' would expire on October 1, 2021, roughly three years after the SUPPORT Act became law, and the end of year three of this analysis. For the purposes of this analysis, year one corresponds to October 25, 2018, through August 15, 2019; year two corresponds to August 16, 2019, through October 31, 2020; year three to November 1, 2020, through October 31, 2021; year four to November 1, 2021, through October 31, 2022; and year five to November 1, 2022, through October 1, 2023.[20] According to DEA registration data, as of April, 2020, mid-way through year two, there are 18,373 DATA-waived NPs and PAs.[21] Because DEA does not have a good basis to forecast how many more NPs and PAs might become DATA-waived through the conclusion of year five of this analysis, DEA conservatively assumes that the number of DATA-waived NPs and PAs will remain constant at the current level of 18,373 through October 1, 2023.

[14] Andrilla CHA, Coulthard C, and Larson EH. ''Barriers Rural Physicians Face Prescribing Buprenorphine for Opioid Use Disorder.'' *The Annals of Family Medicine* 15, no. 4 (2017): 359–62. *https://doi.org/10.1370/afm.2099.*

[15] Stein BD, Gordon AJ, Dick AW, Burns RM, Pacula RL, Farmer CM, Leslie DL, and Sorbero M. ''Supply of Buprenorphine Waivered Physicians: The Influence of State Policies.'' *Journal of Substance Abuse Treatment* 48, no. 1 (2015): 104–11. *https://doi.org/10.1016/j.jsat.2014.07.010.*

[16] Haffajee RL, Bohnert ASB, and Lagisetty PA. ''Policy Pathways to Address Provider Workforce Barriers to Buprenorphine Treatment.'' *American Journal of Preventive Medicine* 54, no. 6 (2018). *https://doi.org/10.1016/j.amepre.2017.12.022.*

[17] Thomas CP, Doyle E, Kreiner PW, Jones CM, Dubenitz J, Horan A, and Stein BD. ''Prescribing Patterns of Buprenorphine Waivered Physicians.'' Drug and Alcohol Dependence 181 (2017): 213–18. *https://doi.org/10.1016/j.drugalcdep.2017.10.002.*

[18] 83 FR 3071 (January 23, 2018).

[19] DEA's analysis of the benefits and costs of this 2018 final rule used the following date ranges to correspond with years one through five of temporary DATA-waived eligibility for NPs and PAs: Year one corresponds to 7/22/2016–9/30/2017; year two corresponds to 10/1/2017–9/30/2018; year three to 10/1/2018–9/30/2019; year four to 10/1/2019–9/30/2020; and year five to 10/1/2020–9/30/2021. The SUPPORT Act was signed into law on October 24, 2018, shortly after the beginning of year three.

[20] DEA chose to limit the analysis period of this interim final rule to five years due to the evolving nature of the opioid epidemic and the long-term uncertainty of the laws and rules being implemented to combat it.

[21] DEA's internal registration database currently does not distinguish between DATA-waived CNS, CRNAs, or CNMs and DATA-waived NPs and PAs. In order to avoid double counting, DEA must adjust the number of DATA-waived mid-level NPs and PAs as of April, 2020 (19,409) downward by the estimated increase in DATA-waived CNS/CRNA/CNMs to date. As detailed in the following section, DEA estimates that 691 CNS/CRNA/CNMs become DATA-waived in each of the first two years of this analysis. Because, at the time of this writing, year two is roughly 50 percent complete, DEA estimates that 1,037 (691 + (691/2) = 1,037) CNS/CRNA/CNMs have obtained a DATA-waiver thus far. Subtracting 1,037 from 19,409 results in an estimated 18,373 NPs and PAs that are currently DATA-waived.

Because even in the absence of the SUPPORT Act, NPs and PAs would be eligible for a DATA-waiver due to the temporary authorization provided by CARA through September 30, 2021, only the estimated number of DATA-waived NPs and PAs in year four and year five are relevant to this analysis. The following table illustrates how each year of this analysis corresponds to the DATA-waiver eligibility for NPs and PAs provided by CARA and the SUPPORT Act, respectively.

	DATA-waiver eligibility provided by CARA			DATA-waiver eligibility provided by SUPPORT Act	
	Year 1	Year 2	Year 3	Year 4	Year 5
Total Number of DATA-waived NPs and PAs				18,373	18,373

Therefore, DEA estimates that 18,373 NPs and PAs would lose their DATA-waiver eligibility and their ability to provide MAT to patients in year four and year five of this analysis if not for the SUPPORT Act.

Expanding the Definition of ''Qualifying Other Practitioner''

This interim final rule also implements the SUPPORT Act provision that allows CNS, CRNAs, or CNMs to apply for DATA-waived status and practice as ''Qualifying Other Practitioners'' for a temporary period ending October 1, 2023. The DATA-waived eligibility of CNS/CRNA/CNMs is new, and as a result, DEA does not have a strong basis to estimate the number of CNS/CRNA/CNMs that would request DATA-waived status. Because DEA's internal registration database currently does not distinguish between DATA-waived CNS/CRNA/CNMs and DATA-waived NPs and PAs, it is likely that any CNS/CRNA/CNMs that have become DATA-waived since the SUPPORT Act became law are currently being categorized as ''Mid-Level Practitioner—DATA-waived Nurse Practitioner'' (MLP–DW NP) or ''Mid-Level Practitioner—DATA-waived Physician Assistant'' (MLP–DW PA). Because of this, it is not possible to determine how many CNS/CRNA/CNMs have already obtained DATA-waived status in their first year of eligibility. However, DEA believes this number to be low since CNS/CRNA/CNM eligibility is new, and many businesses and individuals are still weighing the personal benefits and costs of becoming or employing a DATA-waived CNS/CRNA/CNM.

For the purposes of this analysis, DEA conservatively assumes the ratio of DATA-waived CNS/CRNA/CNMs to all CNS/CRNA/CNMs authorized to prescribe controlled substances will be equal to the ratio of DATA-waived NPs and PAs to all DEA registered NPs and PAs. Based on DEA records, as of August 15, 2019, the end of year one of this analysis, four percent of DEA-registered NPs and PAs are DATA-waived. DEA estimates that 69,128 [22] CNS/CRNA/CNMs are eligible to prescribe controlled substances in the United States. Four percent of 69,128 is 2,765. Therefore, DEA estimates that 2,765 CNS/CRNA/CNMs will become DATA-waived during the temporary eligibility period.

DEA also assumes that all DATA-waived CNS/CRNA/CNMs will be certified in year one through four [23] as the burden of obtaining DATA-waived status outweighs the incentives as the expiration of the temporary provision nears. Smoothing the estimated 2,765 DATA-waived CNS/CRNA/CNMs over four years results in an estimated yearly increase of 691 (rounded). Thus, DEA estimates 691 CNS/CRNA/CNMs have become DATA-waived in year one of this analysis which will increase to 1,382 in year two, and this calculation progresses linearly until a grand total of 2,765 is reached in year four, and remains steady for year five. The table below summarizes this calculation.

	Year 1	Year 2	Year 3	Year 4	Year 5
Group 1: CNS/CRNA/CNMs obtaining DATA-waived status in year 1	691	691	691	691	691
Group 2: CNS/CRNA/CNMs obtaining DATA-waived status in year 2		691	691	691	691
Group 3: CNS/CRNA/CNMs obtaining DATA-waived status in year 3			691	691	691
Group 4: CNS/CRNA/CNMs obtaining DATA-waived status in year 4				691	691
Total Number of DATA-waived CNS/CRNA/CNMs	691	1,382	2,073	2,765	2,765

[22] Bureau of Labor Statistics (BLS) state-level employment data of 41,800 CRNAs and 6,500 CNMs (*https://www.bls.gov/ooh/healthcare/nurse-anesthetists-nurse-midwives-and-nurse-practitioners.htm#tab-6*) were used to calculate the total U.S. employment for this group. However, BLS does not differentiate between all Registered Nurses (RNs) and the more specialized CNS, which are considered Advanced Practice Registered Nurses (APRN) because of their education, training, and duties, because there is no separate Standard Occupational Classification (SOC) code for CNS. Therefore, DEA chose to use a U.S. employment estimate of 72,000 CNS provided by the National Association of Clinical Nurse Specialists (*https://explorehealthcareers.org/career/nursing/clinical-nurse-specialist/*) and assumed that the percentage of CNS employment distributed per state matches the distribution of RN employment by state. DEA then excluded employment data from states that do not allow CNS/CRNA/CNMs to prescribe controlled substances, resulting in 40,298 CNS with prescribing authority, 23,920 CRNAs with prescribing authority and 4,910 CNMs with prescribing authority. This results in a total of 69,128 CNS/CRNA/CNMs with prescribing authority in the U.S.

[23] DEA considered an estimate of the growth of CNS/CRNA/CNMs that ceased at the end of year two, however, it is likely that CNS/CRNA/CNMs will expect this temporary exception to become permanent just as the exception for NPs and PAs has, encouraging growth of this category until year four.

New Option for a Physician To Become a Qualifying Physician

This enabling provision of the interim final rule provides another option for a physician to become qualified to apply for a DATA waiver. While DEA does not have a good basis to quantify the impact of this change, this provision is expected to increase the number of new qualifying physicians, and thus, increase the number of full-time equivalent (FTE) patients [24] treated.

This new option essentially shifts the eight-hour training requirement for a physician to become DATA-waived from post-residency Continuing Medical Education (CME) to medical school or residency for physicians that complete a medical school curriculum or residency that includes at least eight hours of training on treating and managing opioid-dependent patients. While this option streamlines the training for physicians that complete medical school or residency featuring curriculum that meets the training standard; it does not eliminate the eight-hour training requirement. DEA does not have a good basis to estimate the number of medical school curriculums that currently meet this eight-hour training requirement but assumes it to be low, but likely to increase in the future. Therefore, DEA is unable to quantify the expected cost savings of this provision.

Allowing Pharmacies To Deliver Controlled Substances to a Practitioner's Registered Location

Prior to this enabling provision of the SUPPORT Act, pharmacies were only allowed to deliver controlled substances to the ultimate user or research subject. However, for patients prescribed extended-release injectable or implantable MAT drugs, DEA provided an exception to this restriction and allowed the delivery of medication directly from the pharmacy to the practitioner in order for the patient to have their monthly (injectable) or semi-annual (implantable) dosage administered directly in the providers' office without first requiring a trip to the pharmacy. The SUPPORT Act has now made this exception permanent by allowing pharmacies to deliver prescribed narcotic drugs in schedule III, IV, or V, or combinations of such drugs, to a practitioner for the purpose of maintenance and detoxification to be administered by a practitioner through injection or implantation to patients.

Because this provision of the interim final rule is simply codifying previous DEA practice and the current law, DEA expects this provision of the interim final rule to result in no costs or benefits.

Increase in the Number of Patients Receiving Treatment

As discussed above, the expansion of DATA-waived providers to include CNS/CRNA/CNMs on a temporary basis, and NPs and PAs on a permanent basis, is expected to result in more opioid-addicted patients treated. Any increase in the number of patients receiving treatment as a result of this interim final rule will depend not only on an increase in the number of providers offering services, but also on the number of patients currently unable to obtain treatment due to a lack of providers. There is a well-documented treatment gap in the United States between prescription opioid abusers or people dependent on opioids and MAT providers.[25] [26] Therefore, DEA assumes that there is sufficient demand for treatment services that will be met with the expanded patient capacity created by the SUPPORT Act.

The number of FTE patients treated by each newly DATA-waived CNS/CRNA/CNM is expected to be low in the first year and steadily increase as their practices mature. While the patient limit for DATA-waived CNS/CRNA/CNM is set at 30 patients,[27] the actual number of patients treated on a FTE basis is expected to be lower for a variety of reasons, including delays in patient referrals; patients discontinuing treatment without notifying the practitioner; the difference in duration of treatments among patients and inability to perfectly time the replacing of one patient for another while at the patient limit; demands on CNS/CRNA/CNMs to treat patients for conditions other than maintenance and detoxification; private insurance and Medicaid coverage limitations;[28] travel difficulties for patients located in rural areas;[29] and etc.

A recent study regarding the prescribing patterns of MAT providers found that practitioners with 30-patient DATA-waivers treated an average of 13.6 patients per month.[30] For the purposes of this analysis, and consistent with this research, DEA assumes CNS/CRNA/CNMs will slowly build to treating 13.5 average FTE patients over five years. Therefore, this analysis assumes each DATA-waived CNS/CRNA/CNM, upon becoming DATA-waived, will treat 7.5, 9, 10.5, 12, and 13.5 FTE patients in years 1, 2, 3, 4, and 5, respectively.

Applying the assumed average FTE patients for each group of DATA-waived CNS/CRNA/CNM in the year they obtained DATA-waived status, DEA estimated the number of FTE patients expected to be treated for each year. The average FTE patients treated of 7.5, 9, 10.5, 12, and 13.5 in years 1, 2, 3, 4, and 5, respectively, were applied to Group 1 (the group of 691 CNS/CRNA/CNMs that obtained DATA-waived status in year one) to estimate the number of patients treated by this group in each of the five years. The average FTE patients treated of 7.5, 9, 10.5, and 12, in years 2, 3, 4, and 5 were applied to Group 2 (the group of 691 CNS/CRNA/CNMs that obtain DATA-waived status in year two) to estimate the number of patients treated by this group in each of the four remaining years. Similar calculations were performed for Groups 3 (the group of 691 CNS/CRNA/CNMs that obtain DATA-waived status in year three) and 4.[31] Adding the number of FTE patients treated by the four groups, DEA estimates a total of 5,183; 11,402;

[24] ''Full-time-equivalent'' patient is a notional value equivalent to a patient under treatment for the full year. For example, if two patients were under treatment for 6 months, they would total 1 full-time-equivalent patient. The equivalent full-time patient concept has been previously used by DEA and the Substance Abuse and Mental Health Services Administration (SAMHSA) in its estimate of patient increases. Implementation of the Provision of the Comprehensive Addiction and Recovery Act of 2016 Relating to the Dispensing of Narcotic Drugs for Opioid Use Disorder, 83 FR 3071 (January 23, 2018), and Medication Assisted Treatment for Opioid Use Disorders, 81 FR 66191 (July 8, 2016).

[25] Jones et al., ''National and State Treatment Need and Capacity for Opioid Agonist Medication-Assisted Treatment'' *American Journal of Public Health* 105, no. 8 (2015):e55–63.

[26] Office of Inspector General, HHS, 2020. *Geographic Disparities Affect Access To Buprenorphine Services For Opioid Use Disorder.* U.S. Department of Health and Human Services.

[27] The ''patient limit'' is the ''total number of such patients of the practitioner at any one time . . .'' 21 U.S.C. 823(g)(2)(B)(iii)(I). The Secretary of HHS may by regulation change the patient limit, but for the purposes of this analysis, DEA conservatively assumes that the patient limit of 30 will apply for CNS/CRNA/CNMs over the analysis period.

[28] Rinaldo SG and Rinaldo DW. Availability Without Accessibility? State Medicaid Coverage and Authorization Requirements for Opioid Dependence Medications. 2013. *http://www.asam.org/docs/default-source/advocacy/aaam_implications-for-opioid-addiction-treatment_final.*

[29] Sigmon SC. Access to treatment for opioid dependence in rural America: Challenges and future directions. JAMA Psychiatry. 2014;71(4): 359–360. *https://doi.org/10.1001/jamapsychiatry.2013.4450.*

[30] Thomas, et al., ''''Prescribing Patterns of Buprenorphine Waivered Physicians'','' Drug and Alcohol Dependence, 181, Supplement C (2017): 213–218.

[31] DEA assumes that all DATA-waived CNS/CRNA/CNMs will be certified in years one through four as the burden of obtaining DATA-waived status outweighs the incentives as the expiration of the temporary provision nears. Therefore, there is no ''Group 5''.

18,657; 26,949; and 31,095 FTE patients are treated in years 1, 2, 3, 4, and 5, respectively. The table below summarizes this analysis.

	Year 1	Year 2	Year 3	Year 4	Year 5
Group 1: CNS/CRNA/CNMs obtaining DATA-waived status in year 1	691	691	691	691	691
Average full-time-equivalent patients treated per CNS/CRNA/CNMs per year for Group 1	7.5	9	10.5	12	13.5
Patients treated by Group 1	5,183	6,219	7,256	8,292	9,329
Group 2: CNS/CRNA/CNMs obtaining DATA-waived status in year 2	.....	691	691	691	691
Average full-time-equivalent patients treated per CNS/CRNA/CNMs per year for Group 2	.....	7.5	9	10.5	12
Patients treated by Group 2	.....	5,183	6,219	7,256	8,292
Group 3: CNS/CRNA/CNMs obtaining DATA-waived status in year 3	.....	.....	691	691	691
Average full-time-equivalent patients treated per CNS/CRNA/CNMs per year for Group 3	.....	.....	7.5	9	10.5
Patients treated by Group 3	.....	.....	5,183	6,219	7,256
Group 4: CNS/CRNA/CNMs obtaining DATA-waived status in year 4	.....	.....	.....	691	691
Average full-time-equivalent patients treated per CNS/CRNA/CNMs per year for Group 4	.....	.....	.....	7.5	9
Patients treated by Group 4	.....	.....	.....	5,183	6,219
Total Number of CNS/CRNA/CNMs obtaining DATA-waived status	691	1,382	2,073	2,765	2,765
Total Full-time-equivalent patients treated	5,183	11,402	18,657	26,949	31,095

DEA used similar assumptions and calculation methods to determine how many FTE patients will be treated by NPs and PAs that remain DATA-waived in years four and five of this analysis due to the SUPPORT Act providing permanent DATA-waiver eligibility. Only FTE patients treated in years four and five are relevant because even in the absence of the SUPPORT Act, NPs and PAs would be eligible for a DATA-waiver through September 30, 2021 (the end of year three of this analysis) due to the temporary authorization provided by CARA. DEA assumes that the 18,373 DATA-waived NPs and PAs will treat, on average, 13.5 FTE patients in years four and five. Multiplying 18,373 by 13.5 results in an estimated 248,036 FTE patients treated in years four and five due to the SUPPORT Act. The table below summarizes this analysis.

	Year 1	Year 2	Year 3	Year 4	Year 5
Total Number of NP and PA remaining DATA-waived	.....	.....	.....	18,373	18,373
Average full-time-equivalent patients treated per NP and PA per year	.....	.....	.....	13.5	13.5
Total Full-time-equivalent patients treated	.....	.....	.....	248,036	248,036

Economic Burden of Prescription Opioid Abuse

The total U.S. economic burden (healthcare costs, criminal justice costs, and lost productivity costs) of prescription opioid abuse in 2013 was estimated to be $78.5 billion.[32] Lost productivity costs represented approximately 53 percent of the total economic burden, healthcare (including substance abuse treatment costs) represented approximately 37 percent of the total economic burden, and criminal justice costs represented approximately 10 percent of the total economic burden.[33] This study estimated $78.5 billion ($85.2 billion in 2018)[34] in total U.S. economic burden is based on the 1.935 million opioid abuse patients reported by SAMHSA's National Survey on Drug Use and Health as meeting the Diagnostic and American Psychiatric Association's Statistical Manual of Mental Disorders (DSM–IV) criteria for abuse or dependence. Adjusting for substance abuse treatment costs included in the economic burden calculation (because the baseline level of substance abuse treatment cost is not

[32] Florence CS, Zhou C, Luo F & Xu L, *The Economic Burden of Prescription Opioid Overdose, Abuse, and Dependence in the United States, 2013,* 54 Med Care 901 (2016). DEA's 2017 National Drug Threat Assessment (NDTA) also references this estimate for total economic burden of prescription drug abuse. No estimate of the economic burden of prescription opioid abuse is given in the most recent NDTA for 2018.

[33] *Id.*

[34] Adjusted to 2018 dollars using the GDP deflator published by the Federal Reserve Bank of St. Louis (*https://fred.stlouisfed.org/series/GDPDEF,* accessed on 8/15/2019). All figures given below are 2018 dollars unless otherwise indicated.

expected to decrease with more treatment), DEA estimates the total economic burden to be $75.7 billion ($82.14 billion USD in 2018).[35] Dividing this total economic burden by the number of patients, DEA estimates the annual economic burden of prescription opioid abuse is $42,000 per person (USD in 2018).

Economic Burden Reduction

Successful treatment of opioid abuse or dependence is expected to generate economic burden reductions. On November 8, 2011, the National Institutes of Health (NIH) announced the results of a large scale study on treatment of prescription opioid addiction. According to the announcement, [r]esults showed that approximately 49 percent of participants reduced prescription painkiller abuse during extended (at least 12-week) Suboxone treatment. This success rate dropped to 8.6 percent once Suboxone was discontinued.[36] Reductions in prescription painkiller abuse were seen regardless of whether or not the patient reported suffering chronic pain, and participants who received intensive addiction counseling did not show better outcomes when compared to those who did not receive this additional counseling.[37 38]

DEA estimates a patient (or FTE) successfully undergoing treatment will generate an economic burden reduction of $42,000 annually.[39] Based on the figures above, DEA estimates a success rate of 29 percent (average of 49 percent and 8.6 percent from above) in treating abuse and addiction, which would result in economic burden reductions.[40] Several other studies have also shown that office-based buprenorphine treatment has 50–60 percent retention rates at 6-months.[41]

Applying the $42,000 economic burden reduction and a success rate of 29 percent to the estimated 5,183, 11,402, 18,657, 274,985, and 279,131 total FTE patients treated in years 1, 2, 3, 4, and 5, by all practitioners (NPs, PAs, CRNAs, CNS, and CNMs) respectively, the estimated total economic burden reduction is $63 million, $139 million, $227million, $3,349 million, and $3,400 million in years 1, 2, 3, 4, and 5, respectively. The table below summarizes this analysis.

	Year 1	Year 2	Year 3	Year 4	Year 5
Full-time-equivalent patients treated	5,183	11,402	18,657	274,985	279,131
Economic burden reduction per patient ($MM)	0.042	0.042	0.042	0.042	0.042
Treatment success rate	29%	29%	29%	29%	29%
Total economic burden reduction ($MM)	63	139	227	3,349	3,400

Figures are rounded.

Cost of Treatment

As stated previously, this interim final rule does not directly impact the cost of treatment, however, the treatment is required to generate these economic burden reductions, and thus, included in this analysis. Research shows that the treatment period encompasses three phases: Induction, stabilization, and maintenance. The induction phase usually lasts about one week, with the goal of helping the patient discontinue or tremendously decrease the use of other opioids. Stabilization usually takes about one to two months. The patient is seen at least weekly, with the goal of finding the minimum dose necessary to treat the symptoms of opioid addiction. During the first two phases, it is recommended that a patient receives daily dosing. The final stage is the maintenance phase, which is also the longest, as it could be a lifetime process. During this phase, it is important to monitor and address social and family life, as well as cravings and other drug and alcohol use. At this point, a patient should be seen at less frequent intervals, but at least once a month.[42]

The National Institute on Drug Abuse estimates buprenorphine for a stable patient provided in a certified opioid treatment program, including medication and twice-weekly visits costs $115 per week or $5,980 per year.[43] SAMHSA, in their final rule on MAT for opioid use disorders, estimated

[35] The Council of Economic Advisers (CEA) reported that it estimates in 2015, the economic cost of opioid crisis was $504 billion (''The Underestimated Cost of the Opioid Crisis,'' CEA, November, 2017). Among several differences in analysis methods, the CEA's estimate is based on all opioids (prescription and illegal), while Florence et al. reported cost of $78.5B is based only on prescription opioids. To limit the scope of this analysis to the economic burden of prescription opioid abuse and to be consistent with DEA's 2017 National Drug Threat Assessment, this analysis uses the Florence et al. estimated 2013 economic burden of $78.5B (or $82.14B after backing out baseline substance abuse treatment cost and adjusting for USD 2018).

[36] This success rate was measured two months after treatment terminated.

[37] *Painkiller Abuse Treated by Sustained Buprenorphine/Naloxone,* National Institutes of Health (November 8, 2011), *https://www.nih.gov/news-events/news-releases/painkiller-abuse-treated-sustained-buprenorphine/naloxone.*

[38] At an 18-month follow up study, it was found that many patients currently or recently re-engaged in opioid agonist therapy, and the abstinence rate was found to have rebounded to 51.2 percent. NIDA. Long-Term Follow-Up of Medication-Assisted Treatment for Addiction to Pain Relievers Yields ''Cause for Optimism.'' National Institute on Drug Abuse website. *https://www.drugabuse.gov/news-events/nida-notes/2015/11/long-term-follow-up-medication-assisted-treatment-addiction-to-pain-relievers-yields-cause-optimism.* November 30, 2015. Accessed August 15, 2019.

[39] DEA notes that the methodology presented here for calculating the benefits of treatment differs from the methodology employed by HHS in the final rule Medication Assisted Treatment for Opioid Use Disorders, published at 81 FR 44711, on July 8, 2016. HHS calculated the value of Quality Adjusted Life Years gained from treatment and applied this value to their estimated number of additional patients in treatment per year. HHS calculates the average annual benefit per new patient in treatment to be $51,000 while assuming a 43.3 percent treatment completion rate for a 6-month treatment course. For individuals that do not complete treatment, it is assumed that half of the annual benefits are realized.

[40] NIH's report describes that 49 percent and 8.6 percent ''reduced'' abuse, not ''eliminated,'' suggesting the potential of reducing the $42,000 in economic burden, not eliminating the costs. DEA does not have a basis on which to quantify this reduction. However, considering that there are patients that are successfully treated and no longer under treatment, DEA believes a success rate of 29 percent for the overall patient population is a reasonable estimate. The success rate is applied to FTE patients (meaning patients under active treatment) in the following paragraph to estimate economic burden reduction,

[41] *Advancing Access to Addiction Medications: Implications for Opioid Addiction Treatment.* THE AMERICAN SOCIETY OF ADDICTION MEDICINE (June 2013). *https://www.asam.org/docs/default-source/advocacy/aaam_implications-for-opioid-addiction-treatment_final.pdf?sfvrsn=cee262c2_25.*

[42] McNicholas, M.D., Ph.D., *Clinical Guidelines for the Use of Buprenorphine in the Treatment of Opioid Addiction,* Substance Abuse and Mental Health Services Administration, *https://store.samhsa.gov/shin/content/SMA05-4003/SMA05-4003.pdf.*

[43] *How Much Does Opioid Treatment Cost?,* National Institute on Drug Abuse, *https://www.drugabuse.gov/publications/research-reports/medications-to-treat-opioid-addiction/how-much-does-opioid-treatment-cost* (last updated June 2018). The base year was not provided for the cost figure, and thus is assumed to be in (or not materially different from) 2018 USD based on the date of the report.

the cost for buprenorphine and additional medical services, including behavioral health and psychosocial services, is $4,349 per patient per year ($4,852 USD in 2018).[44] Based on the average of these estimates, DEA estimates the cost of buprenorphine treatment is $5,416 per year per FTE patient (USD in 2018). Public funds currently account for 90 percent of substance abuse treatments in the United States.[45] A 2015 National Survey on Drug Use and Health study found that among individuals who sought, but did not receive treatment, 30 percent reported that they did not have insurance coverage and could not afford to pay for treatment.[46] The costs of care, lack of insurance coverage, and shortage of treatment options deter some patients from seeking treatment. DEA also estimates the opportunity cost of treatment for the FTE patient to be $2,113 per year. This includes $302.48 in transportation costs and $1,810.34 of forgone wages (37 visits/year multiplied by loaded hourly wage of $24.46 multiplied by 2 hours of patient time/visit).[47] Therefore, the estimated combined total cost of treatment is $7,529 per year per FTE patient. DEA assumes the funding of treatment cost will be available through private insurance, public assistance, private funds, or any combination thereof, to generate the economic burden reductions discussed above.

After applying the total treatment cost of $7,529 per year to the estimated 5,183; 11,402; 18,657; 274,985; and 279,131 FTE patients treated in years 1, 2, 3, 4, and 5, respectively, the estimated total cost of treatment is $39 million, $86 million, $140 million, $2,070 million, and $2,102 million in years 1, 2, 3, 4, and 5, respectively. The table below summarizes this analysis.

	Year 1	Year 2	Year 3	Year 4	Year 5
Full-time-equivalent patients treated	5,183	11,402	18,657	274,985	279,131
Annual cost of treatment per patient ($MM)	0.0075	0.0075	0.0075	0.0075	0.0075
Cost of treatment ($MM)	39	86	140	2,070	2,102

Figures are rounded.

Treatment Cost Savings

DEA estimates that there will be cost savings from being able to dispense buprenorphine through NPs and PAs on a permanent basis, and through CNS, CRNAs, and CNMs on a temporary basis. Medicare reimburses NPs, PAs, and CNS at 85 percent of the rates for physicians under the Medicare Physician Fee Schedule (MPFS), while CRNAs and CNMs are reimbursed at 80 percent of the amount a physician is paid under the MPFS.[48] While not all treatment is funded by Medicare, public funds currently account for 90 percent of substance abuse treatments in the United States.[49] Based on the MPFS reimbursement rates, DEA estimates that MAT provided by NPs, PAs, CNS, CRNAs, and CNMs costs 17 percent[50] less than treatment provided by physicians, resulting in a cost savings relative to the full cost of treatment in the baseline regulatory environment in which NPs and PAs lose DATA-waived status in year four, and DATA-waived physicians are the only providers of MAT in years four and five.

The treatment cost of $7,529 per FTE patient estimated in the previous section includes $2,113 in opportunity cost, which accounts for transportation costs and forgone wages. The remaining treatment cost of $5,416 includes the cost of medication and physician visits. Because physicians set their own rates, there is no standard price of an office visit for buprenorphine treatment, so comprehensive data are not available. However, according to an article published on *www.suboxonedirectory.com,* the initial evaluation appointment can range from $200–$300 per hour, while the induction appointment can range from $200–$400 per hour.[51] After this, follow up appointments can cost $125–$250 per visit. DEA assumes that after the evaluation and induction visits, a buprenorphine patient will visit their doctor's office on a monthly basis. Taking the midpoint of these cost estimates, DEA estimates that the annual cost for buprenorphine treatment office visits to be $2,800.[52] Seventeen percent savings on $2,800 equates to a savings of $476 for a total treatment cost of $7,053 ($7,529 − $476) per year.

After applying the reduced total treatment cost of $7,053 per year to the estimated 5,183, 11,402, 18,657, 274,985, and 279,131 FTE patients treated in years 1, 2, 3, 4, and 5, respectively, the estimated total cost of treatment is $37 million, $81 million, $132 million, $1,952 million, and $1,982 million in years 1, 2, 3, 4, and 5, respectively. These figures represent a treatment cost savings of $2 million, $5 million, $8 million, $118 million, and $120 million in years 1, 2, 3, 4, and 5, respectively, or a total treatment cost savings of $253 million over five years. The table below summarizes this analysis.

[44] 81 FR 44712, 44732 (July 8, 2016).

[45] Note 30.

[46] *https://addiction.surgeongeneral.gov/chapter-4-treatment.pdf.* The 10 percent figure is for all diagnosed with substance use disorder, not specific to prescription opioids. Figures specific to prescription opioid substance use disorder is not available.

[47] For purpose of this analysis, the estimated typical number of visits for a 6-month period patient and multiplied by two to reflect the 37 FTE visits. The transportation cost of $302.48 is based on 2018 IRS mileage reimbursement rate of $0.545 per mile times an assumed 30 miles round-trip times 37 visits. The loaded hourly wage of $24.46 is based on the median hourly wages for Occupation Code 00–0000 All Occupations ($18.58). May 2018 National Occupational Employment and Wage Estimates, United States, BUREAU OF LABOR STATISTICS, *https://www.bls.gov/oes/current/oes_nat.htm#00-0000* (last visited August 16, 2019). Average benefits for employees in private industry is 29.9 percent of total compensation. Employer Costs for Employee Compensation—June 18, 2019, BUREAU OF LABOR STATISTICS, *https://www.bls.gov/news.release/pdf/ecec.pdf* (last visited August 16, 2019). Adjusting for employer-paid legally required benefits, benefits are 22.2 percent (29.9 percent − 7.7 percent). The 22.2 percent of total compensation equates to 31.67 percent (22.2 percent/70.1 percent) load on wages and salaries. $18.58 × (1 + 0.3167) = $24.46.

[48] Department of Health and Human Services, Centers for Medicare & Medicaid Services, ''Advanced Practice Registered Nurses, Anesthesiologist Assistants, and Physician Assistants,'' October 2016. *https://www.cms.gov/Outreach-and-Education/Medicare-Learning-Network-MLN/MLNProducts/Downloads/Medicare-Information-for-APRNs-AAs-PAs-Booklet-ICN-901623.pdf.*

[49] Florence CS, Zhou C, Luo F & Xu L, The Economic Burden of Prescription Opioid Overdose, Abuse, and Dependence in the United States, 2013, 54 Med Care 901 (2016).

[50] (15 percent + 15 percent + 15 percent + 20 percent + 20 percent)/5 = 17 percent.

[51] ''How Much Does Suboxone Cost?'' The Suboxone Directory. Accessed April 16, 2020. *https://www.suboxone-directory.com/suboxone-treatment/how-much-does-suboxone-cost/.*

[52] Evaluation ($250) + induction ($300) + 12 monthly visits ($187.50 * 12) = $2,800.

	Year 1	Year 2	Year 3	Year 4	Year 5	Total
Baseline Cost of treatment ($MM)	*39*	*86*	*140*	*2,070*	*2,102*	
Full-time-equivalent patients treated	5,183	11,402	18,657	274,985	279,131	
Reduced annual cost of treatment per patient ($MM)	0.0071	0.0071	0.0071	0.0071	0.0071	
Reduced cost of treatment ($MM)	37	81	132	1,952	1,982	
Treatment Cost Savings from Baseline ($MM)	(2)	(5)	(8)	(118)	(120)	(253)

Figures are rounded.

Cost of Obtaining DATA-Waived Status

For the purposes of this analysis, DEA conservatively includes the cost of obtaining DATA-waived status as a cost of this interim final rule. Similar to the treatment cost, this cost is not a direct result of the rule, but necessary to generate the economic burden reductions. DEA considers only CRNAs, CNS, and CNMs to be relevant to this portion of the analysis since the estimated 18,373 NPs and PAs that retain the DATA-waived eligibility as a result of the SUPPORT Act would have incurred the cost of obtaining their DATA-waiver due to the temporary eligibility granted by CARA. Therefore, NPs and PAs are excluded from this portion of this analysis.

To obtain DATA-waived status, the CRNA, CNS, or CNM first needs to meet SAMHSA's requirements and obtain approval from SAMHSA. In addition to being licensed under State law to prescribe schedule III, IV, or V medications for the treatment of pain and registered with DEA, the prospective DATA-waived CRNA, CNS, or CNM must obtain 24 hours of instruction in subject areas by training providers specified in CARA. Generally, once verified by SAMHSA, DEA is notified that a particular CRNA, CNS, or CNM meets all of the criteria. Then, upon successful completion of routine due diligence, DEA will issue a modified registration, which indicates ''DATA-waived'' status. There is no additional fee to DEA for the registration modification.

In addition to 24 hours of training, DEA estimates an additional three hours of administrative tasks, such as signing up for training, receiving training certificates, applying for waivers with SAMHSA, etc. Using a loaded median hourly wage for CRNAs, CNS, and CNMs of $78.52,[53] the 27 hours of training and administrative tasks equate to $2,119.93 per person. SAMHSA provides its courses free of charge. Rounding the $2,119.93 to $2,100 per CRNA, CNS, or CNM and applying it to the 691 applicants in years 1, 2, 3, 4, and 5, respectively, DEA estimates the total cost of obtaining DATA-waived status is $1 million, $1 million, $1 million, $1 million, and $0 in years 1, 2, 3, 4, and 5 respectively. The table below summarizes this analysis.

	Year 1	Year 2	Year 3	Year 4	Year 5
Number of DATA-waived CRNAs, CNS, or CNMs	691	691	691	691	
Cost of obtaining DATA-waived status per NP/PA ($MM)	0.0021	0.0021	0.0021	0.0021	
Total cost of obtaining DATA-waived status ($MM)	1	1	1	1	0

Other Potential Costs

DEA also examined the cost of compliance. Newly DATA-waived NPs, PAs, CRNAs, CNS, and CNMs would be required to comply with various treatment-related record keeping requirements, imposing additional costs. However, a portion of the patient visitation fee can be directly attributed to compliance costs. Therefore, these costs have been included in the cost of treatment; and therefore, recordkeeping compliance cost is excluded from this analysis.

Risk of Diversion

The SUPPORT Act expands the number of DATA-waived practitioners able to treat up to 100 patients, the number of DATA-waived NPs and PAs, and the categories of practitioners, to include CRNAs, CNS, and CNMs, who may dispense FDA approved narcotic drugs in schedule III, IV, or V for the purpose of opioid maintenance or detoxification treatment. DEA understands that there is potential for the abuse of these drugs, which could be worsened by the expansion in the number and types of dispensers.

Since office based opioid treatment with buprenorphine was introduced by the FDA in 2004, buprenorphine (Subutex) and buprenorphine combined with naloxone (Suboxone) have become widely available in the United States. With this availability has come increased reports of misuse and diversion of buprenorphine. Studies have shown that buprenorphine is primarily diverted from prescriptions

[53] The average of the median hourly wages for Occupation Code, 29–1151 Nurse Anesthetists ($80.75), 29–1161 Certified Nurse Midwives ($49.89), and 29–1141 Registered Nurses ($34.48) is $55.04. *May 2018 National Occupational Employment and Wage Estimates, United States,* Bureau of Labor Statistics, *http://www.bls.gov/oes/current/oes_nat.htm* (last visited August 15, 2019). DEA chose to average these occupational codes since they are all considered Advanced Practice Registered Nurses (APRN) because of their education, training, and duties. However, BLS does not differentiate between all Registered Nurses (RNs) and the more specialized CNS because there is no separate Standard Occupational Classification (SOC) code for CNS. Thus, wage data for Registered Nurses are used in their place. Average benefits for employees in private industry is 29.9 percent of total compensation. Employer Costs for Employee Compensation—June 18, 2019, BUREAU OF LABOR STATISTICS, *https://www.bls.gov/news.release/pdf/ecec.pdf* (last visited August 16, 2019). The 29.9 percent of total compensation equates to 42.7 percent (29.9 percent/70.1 percent) load on wages and salaries. $55.04 × (1 + 0.427) = $78.52.

written for the treatment of addiction.[54] However, the primary reason for prescription buprenorphine (Subutex) and buprenorphine combined with naloxone (Suboxone) diversion is the failure to access legitimate addiction treatment.[55] This finding suggests that increasing, not limiting, buprenorphine treatment may be an effective response to the diversion of buprenorphine.[56]

The diversion of buprenorphine for self-treatment is also supported by studies of abuse rates of buprenorphine (Subutex) and buprenorphine combined with naloxone (Suboxone). A study of abuse of buprenorphine and buprenorphine combined with naloxone by opioid-dependent research subjects showed a strong preference for buprenorphine (which does not include naloxone in the formula).[57] This preference is notable because the naloxone blocks the agonist effect of the buprenorphine, and therefore users of buprenorphine with naloxone are less likely to experience euphoria from the drug.[58] The low endorsement [59] of the use of buprenorphine with naloxone and the low prescription rate of buprenorphine (without naloxone) in the United States indicates that the potential for abuse of these drugs is relatively low.[60] Another study of untreated injection drug users found that three out of four respondents said their intended use of buprenorphine or buprenorphine combined with naloxone was to self-medicate for addiction and/or to treat withdrawal.[61] While buprenorphine and buprenorphine combined with naloxone are schedule III narcotics with a potential for diversion and abuse, academic literature seems to indicate that the diversion is not motivated by addiction to buprenorphine, but rather as a method to treat opioid addiction problems.[62] Additionally, since NPs, PAs, CRNAs, CNS, and CNMs seeking to obtain the authority to dispense under the SUPPORT Act already have the authority to dispense controlled substances, and the SUPPORT Act only allows them to treat a specific group of patients with specific ailments, and will often be done in collaboration with or under the supervision of a qualified physician, DEA believes any added risk as a result of this rule would not be significant.

Cost to DEA

As part of its core function, DEA's Diversion Control Division manages over 1.9 million DEA registrations (processing new and renewal registration applications, processing registration modification requests, issuing certificates of registration, issuing renewal notifications, conducting due diligence, maintaining and operating supporting information systems, etc.). DEA does not anticipate it will incur any additional costs as a result of conducting due diligence and processing 19,659 registration modifications for DATA-waived status over five years. DEA's Registration Section and field office representatives conduct similar registration-related due diligence and process registration modifications as part of their routine operations. As of August 2019, DEA has absorbed any extra work in processing over 5,600 registration modifications related to this interim final rule with preexisting resources, without an increase in cost to DEA. Likewise, DEA anticipates it will continue to absorb any additional work in processing the registration modifications for the duration of the analysis period.

Summary of Benefits and Costs

As described above, DEA estimates the total benefit (in the form of economic burden reduction and other cost savings) is $63 million, $139 million, $227 million, $3,349 million, and $3,400 million in years 1, 2, 3, 4, and 5, respectively; the total cost of treatment is $39 million, $86 million, $140 million, $2,070 million, and $2,102 million in years 1, 2, 3, 4, and 5, respectively; the total treatment cost savings is $2 million, $5 million, $8 million, $118 million, and $120 million in years 1, 2, 3, 4, and 5, respectively; and the total cost of obtaining DATA-waived status is $1 million, $1 million, $1 million, $1 million, and $0 in years 1, 2, 3, 4, and 5, respectively; resulting in a net benefit of $25 million, $57 million, $94 million, $1,396 million, and $1,418 million in years 1, 2, 3, 4, and 5, respectively. The table below summarizes the benefits and costs.

	Year 1	Year 2	Year 3	Year 4	Year 5
Total benefit ($MM)	63	139	227	3,349	3,400
Cost of treatment ($MM)	39	86	140	2,070	2,102
Treatment cost savings ($MM)	(2)	(5)	(8)	(118)	(120)
Cost of obtaining DATA-waived status ($MM)	1	1	1	1	.....
Total cost ($MM)	38	82	133	1,953	1,982
Annual net benefit ($MM)	25	57	94	1,396	1,418

Figures are rounded.

DEA recognizes that accurately calculating the benefits of this rule rests primarily on the number of FTE patients in treatment. While DEA considers its primary estimates presented above to be reasonable, there are also inherent uncertainties in predicting these figures over time. Therefore, DEA varied its estimated number of FTE patients treated per provider plus and minus 10 percent in order to capture the likely range of benefits surrounding the primary estimate. These results are detailed in the following table. The impact of varying additional inputs are summarized in the sensitivity analysis section below.

[54] Lofwall MR and Havens JR, Inability to access buprenorphine treatment as a risk factor for using diverted buprenorphine, Drug Alcohol Dependence, Dec. 1, 2012.

[55] Id.

[56] Id.

[57] Martin, Judith, Providers' Clinical Support System for Medication Assisted Treatment Guidance, January 10, 2014. *https://pcssnow.org/wp-content/uploads/2014/02/PCSS-MATGuidanceAdherence-diversion-bup.Martin.pdf.*

[58] Id.

[59] ''Low endorsement'' means that the Suboxone is not as highly sought after because the naloxone in the formula acts as an antagonist to the buprenorphine, meaning patients cannot experience the euphoria from the drug.

[60] Id.

[61] Diversion and Abuse of Buprenorphine: A Brief Assessment of Emerging Indicators, JBS International, Inc., Maxwell, Jane C. November 30, 2006.

[62] Cicero, Theodore J., Matthew S. Ellis, and Howard D. Chilcoat. ''Understanding the Use of Diverted Buprenorphine.'' Drug and Alcohol Dependence 193 (2018): 117–23. *https://doi.org/10.1016/j.drugalcdep.2018.09.007.*

	Year 1	Year 2	Year 3	Year 4	Year 5
Total benefit ($MM)	57–69	125–153	205–250	3,014–3,684	3,060–3,740
Cost of treatment ($MM)	35–43	77–94	126–155	1,863–2,277	1,891–2,312
Treatment cost savings ($MM)	(2)–(3)	(4)–(5)	(7)–(9)	(106)–(129)	(107)–(132)
Cost of obtaining DATA-waived status ($MM)	1	1	1	1	.....
Total cost ($MM)	34–41	74–90	120–147	1,758–2,149	1,784–2,180
Annual net benefit ($MM)	23–28	51–63	85–103	1,256–1,535	1,276–1,560

At a 3 percent discount rate, the present value of benefits is $6,308 million, the present value of costs is $3,681 million and the net present value (NPV) is $2,627 million. At a 7 percent discount rate, the present value of benefits is $5,345 million, the present value of costs is $3,119 million and the NPV is $2,226 million.[63] The net benefits in years one to five equate to an annualized net benefit of $574 million at 3 percent discount rate and $543 million at 7 percent discount rate over five years. The table below summarizes the present value and annualized benefit calculations.

	3%	7%
Present value of benefits ($MM)	6,308	5,345
Present value of costs ($MM)	3,681	3,119
Net present value ($MM)	2,627	2,226
Annualized net benefit—5 years ($MM)	574	543

Figures are rounded.

Consistent with OMB's Guidance for E.O. 13771,[64] DEA assessed the costs and cost savings directly attributable to this rule. The costs directly attributable to this rule are the cost to CNS/CRNA/CNMs of obtaining DATA-waived status. The cost savings directly attributable to this rule are the reduction in costs that result from NPs, PAs, CNS, CRNAs, and CNMs providing MAT rather than physicians. Both are discussed in detail above. Below is a summary of the present value of net costs attributable to this interim final rule, with the annualized net cost figure adjusted to 2016 dollars.

	3%	7%
Present value of costs ($MM)	4	3
Present value of cost savings ($MM)	(219)	(185)
Net present value ($MM)	(215)	(182)
Annualized net costs—5 years ($MM)	(44)	(42)

The annualized net cost savings from this rulemaking will be $44 million at a 3 percent discount rate and $42 million at a 7 percent discount rate over the next five years.

Sensitivity Analysis

The five-year net benefit and the associated NPV are sensitive to the assumptions and estimates for variables that were factored into the calculation. The variables are:

- Number of DATA-waived NPs, PAs, CRNAs, CNS, and CNMs.
- Number of FTE patients treated per NP/PA.
- Economic burden reduction per patient.
- Treatment success rate.
- Annual cost of treatment per patient.
- Cost of obtaining DATA-waived status.

Sensitivity analysis was conducted by adjusting the variables up and down by 10 percent and recording the change in the NPV. The NPV was most sensitive to the change in the number of DATA-waived practitioners, the economic burden reduction per patient, and the treatment success rate. A 10 percent change in these variables resulted in a 23 percent to 24 percent change in the NPV. The NPV was the least sensitive to the change in cost of obtaining DATA-waived status. A 10 percent change resulted in minimal change in the NPV. The remaining variables were moderately sensitive. A 10 percent change in the annual cost of treatment resulted in a 14 percent change in the NPV, while a 10 percent change in the number of FTE patients treated per provider resulted in a 10 percent change in the NPV, respectively.

The table below summarizes the sensitivity analysis.

[63] *See* Office of Mgmt. & Budget, Exec. Office of the President, OMB Circular A–4, Regulatory Analysis (2003).

[64] Office of Mgmt. & Budget, Exec. Office of the President, OMB Memorandum M–17–21, Implementing Executive Order 13771, Titled ''Reducing Regulation And Controlling Regulatory Costs'' 10 (2017).

Variables	NPV ($MM), 3% discount rate			NPV ($ MM), 7% discount rate		
	10% less	Base	10% more	10% less	Base	10% more
Number of DATA-waived NPs, PAs, CRNAs, CNS, and CNMs	2,024	2,627	3,221	1,714	2,226	2,729
Percent of Base	77%	N/A	123%	77%	N/A	123%
Number of Full-time-equivalent patients treated Practitioner	2,365	2,627	2,890	2,003	2,226	2,448
Percent of Base	90%	N/A	110%	90%	N/A	110%
Economic burden reduction per patient	1,997	2,627	3,258	1,692	2,226	2,760
Percent of Base	76%	N/A	124%	76%	N/A	124%
Treatment success rate	1,997	2,627	3,258	1,692	2,226	2,760
Percent of Base	76%	N/A	124%	76%	N/A	124%
Annual cost of treatment per patient	2,995	2,627	2,259	2,537	2,226	1,914
Percent of Base	114%	N/A	86%	114%	N/A	86%
Annual cost of obtaining DATA-waived status	2,627	2,627	2,623	2,226	2,226	2,223
Percent of Base	100%	N/A	100%	100%	N/A	100%

Executive Order 12988, Civil Justice Reform

This interim final rule meets the applicable standards set forth in sections 3(a) and 3(b)(2) of Executive Order 12988, Civil Justice Reform to eliminate ambiguity, minimize litigation, establish clear legal standards, and reduce burden.

Executive Order 13132, Federalism

This rulemaking does not have federalism implications warranting the application of Executive Order 13132. The interim final rule does not have substantial direct effects on the States, on the relationship between the National Government and the States, or the distribution of power and responsibilities among the various levels of government.

Executive Order 13175, Consultation and Coordination With Indian Tribal Governments

This interim final rule does not have substantial direct effects on the States, on the relationship between the National Government and the States, or the distribution of power and responsibilities between the Federal Government and Indian tribes.

Regulatory Flexibility Act

The Regulatory Flexibility Act (RFA) (5 U.S.C. 601–612) applies to rules that are subject to notice and comment under section 553(b) of the APA. As explained above, DEA determined that there was good cause to exempt this interim final rule from notice and comment. Consequently, the RFA does not apply to this interim final rule.

Unfunded Mandates Reform Act of 1995

This interim final rule will not result in the expenditure by state, local, and tribal governments, in the aggregate, or by the private sector, of $100,000,000 or more (adjusted for inflation) in any one year, and will not significantly or uniquely affect small governments. Therefore, no actions were deemed under the provisions of the Unfunded Mandates Reform Act of 1995, 2 U.S.C. 1532.

Congressional Review Act

This rule is a major rule as defined by the Congressional Review Act. 5 U.S.C. 804. This rule will result in an annual effect on the economy of $100 million or more as a result of economic burden reductions. However, it will not cause a major increase in costs or prices; or significant adverse effects on competition, employment, investment, productivity, innovation, or on the ability of the United States-based companies to compete with foreign based companies in domestic and export markets. DEA has submitted a copy of this interim final rule to both Houses of Congress and to the Comptroller General.

Paperwork Reduction Act of 1995

This action does not impose a new nor modify an existing collection of information requirement under the Paperwork Reduction Act of 1995. 44 U.S.C. 3501–3521.

List of Subjects

21 CFR Part 1301

Administrative practice and procedure, Drug traffic control, Security measures.

21 CFR Part 1306

Drug traffic control, Prescription drugs.

For the reasons set out above, this DEA interim final rule amends 21 CFR parts 1301 and 1306 as follows:

PART 1301—REGISTRATION OF MANUFACTURERS, DISTRIBUTORS, AND DISPENSERS OF CONTROLLED SUBSTANCES

■ 1. The authority citation for 21 CFR part 1301 continues to read as follows:

Authority: 21 U.S.C. 821, 822, 823, 824, 831, 871(b), 875, 877, 886a, 951, 952, 956, 957, 958, 965 unless otherwise noted.

■ 2. In § 1301.28:
■ a. Revise the first sentence in paragraph (b)(1)(i);
■ b. Revise (b)(1)(iii)(B); and
■ c. Remove paragraph (b)(1)(iii)(C).

The revisions read as follows:

§ 1301.28 Exemption from separate registration for practitioners dispensing or prescribing Schedule III, IV, or V narcotic controlled drugs approved by the Food and Drug Administration specifically for use in maintenance or detoxification treatment.

* * * * *

(b)(1) * * *

(i) The individual practitioner is registered under § 1301.13 as an individual practitioner and is a ''qualifying physician'' as defined in section 303(g)(2)(G)(ii) of the Act (21 U.S.C. 823(g)(2)(G)(ii)); a ''qualifying other practitioner'' as defined in section 303(g)(2)(G)(iv) of the Act (21 U.S.C. 823(g)(2)(G)(iv)) who is a nurse practitioner or physician assistant; or during the period beginning on October 1, 2018 and ending on October 1, 2023, a ''qualifying other practitioner'' as defined in section 303(g)(2)(G)(iv) of the

Act (21 U.S.C. 823(g)(2)(G)(iv)) who is clinical nurse specialist, certified registered nurse anesthetist, or certified nurse midwife. * * *

* * * * *

(iii) * * *

(B) The applicable number is—

(*1*) 100 if not sooner than 1 year after the date on which the practitioner submitted the initial notification, the practitioner submits a second notification to the Secretary of Health and Human Services of the need and intent of the practitioner to treat up to 100 patients;

(*2*) 100 if the practitioner holds additional credentialing, as defined in 42 CFR 8.2;

(*3*) 100 if the practitioner provides medication-assisted treatment using covered medications (as such terms are defined in 42 CFR 8.615) in a qualified practice setting (as described in 42 CFR 8.615); and

(*4*) 275 if the practitioner meets the requirements specified in 42 CFR 8.610 through 8.655.

* * * * *

PART 1306—PRESCRIPTIONS

■ 3. The authority citation for 21 CFR part 1306 is revised to read as follows:

Authority: 21 U.S.C. 821, 823, 829, 829a, 831, 871(b) unless otherwise noted.

■ 4. In § 1306.04, add paragraph (d) to read as follows:

§ 1306.04 Purpose of issue of prescription.

* * * * *

(d) A prescription may be issued by a qualifying practitioner, as defined in section 303(g)(2)G)(iii) of the Act (21 U.S.C. 823(g)(2)(G)(iii), in accordance with § 1306.05 for a Schedule III, IV, or V controlled substance for the purpose of maintenance or detoxification treatment for the purposes of administration in accordance with section 309A of the Act (21 U.S.C. 829a) and § 1306.07(f). Such prescription issued by a qualifying practitioner shall not be used to supply any practitioner with a stock of controlled substances for the purpose of general dispensing to patients.

■ 5. In § 1306.07, add a reserved paragraph (e) and paragraph (f) to read as follows:

§ 1306.07 Administering or dispensing of narcotic drugs

* * * * *

(f) Notwithstanding the definition of dispense under section 102(10) of the Act (21 U.S.C 802(10)), a pharmacy may deliver a controlled substance to a practitioner, pursuant to a prescription that meets the requirements under § 1306.04 for the purpose of administering the controlled substance by the practitioner if:

(1) The controlled substance is delivered by the pharmacy to the prescribing practitioner or the practitioner administering the controlled substance, as applicable, at the location, listed on the practitioner's certificate of registration;

(2) The controlled substance is to be administered for the purpose of maintenance or detoxification treatment under section 303(g)(2)(G)(iii) of the Act (21 U.S.C. 823(g)(2)(G)(iii)); and

(i) The practitioner who issued the prescription is a qualifying practitioner as defined in section 303(g) of the Act (21 U.S.C. 823(g)); and

(ii) The controlled substance is to be administered by injection or implantation;

(3) The pharmacy and the practitioner are authorized to conduct such activities specified in this paragraph (f) under the law of the State in which such activities take place;

(4) The prescription is not issued to supply any practitioner with a stock of controlled substances for the purpose of general dispensing to patients;

(5) The controlled substance is to be administered only to the patient named on the prescription not later than 14 days after the date of receipt of the controlled substance by the practitioner; and

(6) Notwithstanding any exceptions under section 307 of the Act (21 U.S.C. 827), the prescribing practitioner, and the practitioner administering the controlled substance, as applicable, shall maintain complete and accurate records of all controlled substances delivered, received, administered, or otherwise disposed of, under this paragraph (f), including the persons to whom the controlled substances were delivered and such other information as may be required under this chapter.

Timothy J. Shea,

Acting Administrator.

[FR Doc. 2020–23813 Filed 10–29–20; 4:15 pm]

BILLING CODE 4410–09–P

EQUAL EMPLOYMENT OPPORTUNITY COMMISSION

29 CFR Part 1695

RIN 3046–AB18

Procedural Regulations for Issuing Guidance

AGENCY: Equal Employment Opportunity Commission.

ACTION: Final rule.

SUMMARY: The Equal Employment Opportunity Commission (EEOC or Commission) is issuing a final rule to establish procedural regulations for issuing guidance. These rules make guidance documents readily available to the public, ensure that guidance will be treated as non-binding, require a notice and public comment period for significant guidance, and establish a public petition process for the issuance, amendment, or repeal of guidance.

DATES: *Effective date:* December 2, 2020.

FOR FURTHER INFORMATION CONTACT: Robert Carter, Special Assistant, Office of Legal Counsel, (202) 663–4692 or *robert.carter@eeoc.gov.*

SUPPLEMENTARY INFORMATION: The Administrative Procedure Act (APA), section 553 of title 5, United States Code, generally requires Federal agencies engaged in administrative rulemaking to give public notice of proposed regulations, provide interested parties an opportunity to comment, consider and respond to significant comments, and publish final regulations in the **Federal Register**.

On October 9, 2019, President Donald J. Trump issued Executive Order (E.O.) 13891, ''Executive Order on Promoting the Rule of Law Through Improved Agency Guidance Documents.'' It directed most Federal departments, agencies, and commissions to adopt policies to ensure that ''Americans are subject only to those binding rules imposed through duly enacted statutes or through regulations lawfully promulgated under them'' and that those subject to such rules shall have ''fair notice of their obligations.'' E.O. 13891, 84 FR 55235 (October 9, 2019). E.O. 13891 asserts that some agencies have used guidance in the place of regulations to avoid the APA's statutory safeguards. To address these concerns, the Executive order requires agencies to adopt regulations that make guidance documents more readily available to the public, better ensure that guidance will be treated as non-binding, require a notice and public comment period for significant guidance, and establish a public petition process for the issuance, amendment, or repeal of guidance.

Independent of E.O. 13891, the Commission believes that this final rule will provide clearer procedures for issuance of its guidance documents and ensure an opportunity for the public to comment on proposed significant guidance. Such steps will improve the guidance the Commission issues. Guidance documents are a critical component of the Commission's

outreach and education efforts, as they inform the public of the Commission's current interpretations of the law on specific topics and promote voluntary compliance. So, establishing permanent procedures through its regulations on how the Commission will issue guidance will be beneficial to the Commission and its stakeholders.

This final rule creates a new part, 29 CFR part 1695, to address the requirements of Executive Order 13891 and the Office of Management and Budget's explanation in Memorandum M–20–02. The requirements of this regulation apply to EEOC guidance documents as defined herein; they do not apply to or otherwise replace the requirements of the APA and associated Executive orders for regulations or rules. The definitions, requirements, and procedures for issuing guidance adopted in §§ 1695.1 through 1695.6 of the rule are modeled on sections 2 and 4 of Executive Order 13891. The adoption of a public petition process for the issuance, amendment, or repeal of guidance in § 1695.7 of the rulemaking is mandated by section 4(a) of Executive Order 13891. The requirement in § 1695.8 of posting of all existing guidance on the Commission website in a single, searchable, indexed database (launched on February 28, 2020) is consistent with section 3(a) of the Executive order. The prohibition in § 1695.9 against the agency citing to rescinded guidance, except for historical purposes, reflects the requirements of section (3)(b) of Executive Order 13891, and the disclaimer of judicial or enforceable rights in regulation § 1695.10 reflects section 7 of the Executive order.

The Commission published a Notice of Proposed Rulemaking (NPRM) in the **Federal Register** (85 FR 30667) on May 20, 2020 for a 30-day notice and comment period, which ended on June 19, 2020.

Comments Generally

The Commission received nine comments on the NPRM during the 30-day comment period. These were submitted through *Regulations.gov,* the Federal government's electronic docket system, under EEOC–2020–0004. No comments were faxed or mailed to the Executive Secretariat.

Of the nine comments, two organizations supported the proposed rule and three opposed it. Four individuals submitted comments that were non-responsive and require no additional discussion.

The Commission has reviewed and considered each of the comments in preparing this final rule. They are discussed in further detail below.

Comments Supporting the NPRM

The American Road & Transportation Builders Association (''ARTBA'') supported the mandatory disclaimer language of proposed § 1695.2(c)(7)(i) as a means to ensure that the Commission's guidance is considered non-binding. It noted that guidance has become a new *de facto* regulation of its own, creating additional mandates on the entities it covers, while evading the public comment process.

ARTBA further supported the creation of a web-based index of guidance pursuant to proposed § 1695.8. It affirmed that making guidance documents more accessible would help smaller businesses stay aware of their employment responsibilities and comply with EEOC objectives.

The Center for Workplace Compliance (''CWC'') also supported the notice and public comment provisions of proposed § 1695.6, noting that the Commission has not always solicited public comments for guidance. It further supported the petition provisions of proposed § 1695.7, affirming that the Commission would be less likely to retain outdated or incorrect guidance if the public had an opportunity to petition for a rescission or revision of guidance. It noted that the Commission's 1997 *Policy Statement on Mandatory Binding Arbitration of Employment Discrimination Disputes as a Condition of Employment* was inconsistent with more than 20 Supreme Court decisions and rejected by every U.S. Court of Appeals, but not rescinded until December 2019.

The CWC recommended improvements to the indexing and search capabilities of the guidance web portal. For example, it noted that searching for the topic ''ADA'' would not retrieve all documents related to the Americans with Disabilities Act because many are classified using the topic ''disability.'' Issues regarding the methodology of the database's search function do not need to be addressed in the final rule and this comment was referred to the Commission's Office of Communications and Legislative Affairs, which controls the website.

Comments Opposing the NPRM

Comments opposing the NPRM were received from The Leadership Conference, National Women's Law Center, and a joint letter from the Texas RioGrande Legal Aid and Disability Rights Texas. Comments shared by all three letters are addressed together.

Comment Period

All three letters criticized the Commission's decision to issue the NPRM with a 30-day comment period during the Covid–19 pandemic. They contended that the decision did not provide sufficient time for comment and ''casts a shadow on the integrity of the comment process.''

Guidance Disclaimer

The three letters objected to the mandatory disclaimer language of proposed § 1695.2(c)(7)(i), alleging that it was broader than that required by Executive Order 13891. They further contended that while guidance is intended to provide clarity on the law, the disclaimer creates the impression that it cannot be relied upon to provide such clarity. They fear, therefore, that this language could confuse both workers and employers about their rights and obligations, and create uncertainty about the Commission's authority.

The three letters also noted that guidance is entitled to deference by courts pursuant to the standard in *Skidmore* v. *Swift & Co.,* 323 U.S. 134 (1944), and that the Supreme Court has held that EEOC guidance reflects ''a body of experience and informed judgment to which courts and litigants may properly resort for guidance.'' *Fed. Exp. Corp.* v. *Holowecki,* 552 U.S. 389, 399 (2008) (quoting *Bragdon* v. *Abbott,* 524 U.S. 624, 642 (1998)). They further alleged that courts can distinguish between guidance and rulemaking, citing the U.S Supreme Court's decision in *Azar* v. *Allina Health Servs.,* 139 S. Ct. 1804, 1811 (2019), which struck down an interpretive rule that created a substantive legal standard.

Petitions

The three letters alleged a lack of transparency in the petition process established by proposed § 1695.7, which allows ''any interested person'' to petition the Commission to issue, amend, or repeal a guidance document. They noted that the process does not require the Commission to publish the petition contents or identity of the petitioner. The Leadership Conference asked that the Commission make petitions publicly available through the EEOC guidance portal and in hard copy at EEOC headquarters.

The three letters also objected to the regulation's silence regarding the process for considering and resolving petitions, as well as the absence of a decision-making standard. They also objected to the provision in proposed § 1695.7(d) that allowed a petition to be

denied without a response if it were ''self-explanatory.''

Emergency Exception

The Texas RioGrande Legal Aid and Disability Rights Texas objected to the emergency provisions of proposed §§ 1695.2(d) and 1695.4(c), which waive certain time and/or procedural requirements during an emergency. They contended that the NPRM provides no information as to what circumstances might properly be considered emergencies, how that determination would be made, or what checks limit the Chair's power to declare an emergency.

Executive Order Compliance

The National Women's Law Center comment questioned whether the NPRM adequately conformed to the provisions of Executive Order 12866, which requires agencies to assess the potential costs/benefits of a proposed rule and adopt an approach that produces the least total burden and most benefit to society. It contended that the Commission failed to adequately assess both the costs and benefits of the proposed rule.

The Texas RioGrande Legal Aid & Disability Rights Texas noted that while the NPRM referenced Executive Orders 12866, 13536, 13609, 13771, and 13777, it failed to acknowledge how those mandates would be affected by subjecting significant guidance documents to review by the Office of Information and Regulatory Affairs (OIRA) and a 30-day notice and comment period.

The EEOC's Response to the Comments

Comment Period

The Commission believes that the 30-day comment period provided sufficient time for the public to comment on the proposed rule. The NPRM was a straightforward codification of E.O. 13891 into regulatory text. The public was able to submit comments through multiple avenues (electronically, mail, and fax). As noted above, five substantive comment were received, containing extensive legal citations and as many as 10 pages and 12 footnotes, which indicates that the comment period was sufficient for the public to provide detailed substantive comments.

Guidance Disclaimer

The disclaimer language in the NRPM is taken nearly verbatim from OMB's implementing memorandum M–20–02. The disclaimer informs the public regarding the legal effect of the Commission's guidance documents and does not interfere with a court's ability to find that the guidance has the ''power to persuade.'' *Skidmore,* 323 U.S. at 139.

Petition

The petition language of proposed § 1695.7 is modeled after the Commission's regulations for the issuance, amendment, or repeal of rules contained in 29 CFR 1601.35 and 1601.36. These provisions were first established on October 14, 1977 and amended twice, on August 4, 1989 and January 21, 2009. As the final rule states, handling these petitions will follow the agency's usual procedures, which have existed for more than four decades.

Regarding petitions denied without requiring a response, the Commission does occasionally receive comments that are irrelevant and unfit for a response. Indeed, four of the nine comments received for the NPRM were not responsive to the issues raised in it. Substantive petitions will be defined broadly and considered on their merits.

The Commission will not specify in the rule that all petitions it receives will be published. Doing so would infringe on the Commission's internal deliberations and deliberative process and be inconsistent with the Commission's approach to handling petitions for rulemaking under §§ 1601.35 and 1601.36.

Emergency Exception

Commenters' objections regarding the narrow emergency exception of proposed § 1695.4(c) are misplaced. Proposed § 1695.4(c) merely allows the Chair to bypass OIRA's review of a ''significant guidance'' determination and allow guidance to be issued on an emergency basis. The determination would, however, be reviewed later.

In similar manner, the emergency exception of proposed § 1695.2(d) only waives the five-day review period for Commissioners to review a document that ''is not setting forth a new or changed legal position, is reiterating already established Commission policies, or is otherwise simply providing technical assistance on the laws the Commission enforces without announcing any new policy or legal position.'' Commission procedures already allow the Chair to approve such guidance without a Commission vote.

Executive Order Compliance

The National Women's Law Center challenged whether the Commission assessed both the costs and benefits of the proposed rule. In response, the Commission affirms that it complied with section 1(b)(6) of Executive Order 12866, which requires each agency to assess the costs and benefits of an intended regulation (recognizing that these can be difficult to quantify) and adopt a regulation only when the benefits justify its costs.

The final rule is focused solely on the Commission's internal procedures for issuing guidance and imposes no direct costs on any third parties. The rule does not prevent the Commission from issuing guidance and will ensure that the guidance the Commission does issue: Clearly states its legal effect, when necessary has been subject to public input, can be found by the public, and is overall legally and economically sound. All of these are benefits to both employers and employees, as well as the public at large.

The Texas RioGrande Legal Aid & Disability Rights Texas alleged that the Commission failed to acknowledge how the NPRM would affect the requirements of Executive Orders 12866, 13536, 13609, 13771, and 13777, since they subject significant guidance documents to review by OIRA and require a 30-day notice and comment period. Given that OIRA review and public comment procedures already exist for Commission regulations, the addition of a relatively few significant guidance documents to the existing system will not be overly burdensome.

Determination

After considering all responsive comments, the Commission has determined that this final rule will adopt the language as proposed in the NPRM without change, except for a non-substantive change in § 1695.1(a) and including that the Chair must also inform other Commissioners in § 1695.4(c).[1] The final rule adopts the requirements of E.O. 13891 and OMB M–20–02 into the Commission's processes and will further E.O. 13891's important goal of improving the Commission's guidance documents. As noted above, independent of E.O. 13891, the Commission believes that the procedures described in this final rule are good policy that will improve its guidance documents. As discussed above, the comments have not provided

[1] In § 1695.1(a) the Commission is making a stylistic change to the proposed language by adding ''and'' prior to ''advisories.'' Section 1695.4(c) discusses when the Chair can avoid the normal review procedures outlined in this rule due to emergencies, statutory deadlines, or court orders. As originally proposed, § 1695.4(c) only stated that the Chair had to inform OIRA, but in the final rule, the Commission is adding that all Commissioners must also be notified to ensure that all Commissioners are fully aware that the Commission will not be going through normal review procedures.

compelling reasons to adjust what the Commission initially proposed. Therefore, other than a minor stylistic change in § 1695.1(a) and adding that the Chair must inform Commissioners as well in § 1695.4(c), the Commission adopts as a final rule the language proposed in the NPRM.

Regulatory Procedures

Executive Order 12866

This rule will govern the internal practices of the Commission. It will not have an annual effect on the economy of $100 million or more, or adversely affect in a material way the economy, a sector of the economy, productivity, competition, jobs, the environment, public health or safety, or State, local, or tribal governments or communities. This rule also will not create a serious inconsistency or otherwise interfere with an action taken or planned by another agency, nor will it materially alter the budgetary impact of entitlements, grants, user fees, or loan programs or the rights and obligations of recipients thereof. Furthermore, it will not raise novel legal or policy issues arising out of legal mandates, the President's priorities, or the principles set forth in Executive Order 12866. In consequence, this rule is not a ''significant regulatory action'' within the meaning of section 3 of Executive Order 12866.

Paperwork Reduction Act

This rule contains no new information collection requirements subject to review by the Office of Management and Budget under the Paperwork Reduction Act (44 U.S.C. chapter 35).

Regulatory Flexibility Act

The Commission certifies under 5 U.S.C. 605(b) that this rule will not have a significant economic impact on a substantial number of small entities because it primarily affects internal Commission procedure. To the extent that this rule does affect small entities, it provides free access to all EEOC guidance documents. Further, allowing small employers advance notice of significant guidance, and an opportunity to comment on proposed significant guidance, gives small employers a greater opportunity to have their concerns heard and addressed before documents are finalized.

Unfunded Mandates Reform Act of 1995

This rule will not result in the expenditure by State, local, or tribal governments, in the aggregate, or by the private sector, of $100 million or more in any one year, and it will not significantly or uniquely affect small governments.[2] It is strictly internal, and does not impose mandates on any entity outside the Commission. Indeed, the rule's advance notice and comment requirements give small governments a greater opportunity to voice their concerns and have them addressed before documents are finalized. In consequence, it is not anticipated to significantly or uniquely affect small government. In consequence, no actions were deemed necessary under the provisions of the Unfunded Mandates Reform Act of 1995.

Congressional Review Act

While this action concerns agency procedure, it does not substantially affect the rights or obligations of non-agency parties and, accordingly, is not a ''rule'' as that term is used by the Congressional Review Act (Subtitle E of the Small Business Regulatory Enforcement Fairness Act of 1996 (SBREFA)). The Commission will continue to follow the reporting requirement of 5 U.S.C. 801.

List of Subjects in 29 CFR Part 1695

Administrative practice and procedure, Equal employment opportunity.

For the Commission.

Janet Dhillon,

Chair.

■ For the reasons set forth in the preamble, the Equal Employment Opportunity Commission amends 29 CFR chapter XIV by adding part 1695 to read as follows:

PART 1695—GUIDANCE PROCEDURES

Sec.

1695.0 Applicability.
1695.1 Definitions.
1695.2 Guidance requirements.
1695.3 Good faith cost estimates.
1695.4 Significance determination.
1695.5 Significant guidance requirements.
1695.6 Notice and public comment.
1695.7 Petitions.
1695.8 Public access to current guidance documents.
1695.9 Rescinded guidance.
1695.10 No judicial review or enforceable rights.

Authority: 5 U.S.C. 553, 42 U.S.C. 2000e–12, 29 U.S.C. 201 *et seq.,* 29 U.S.C. 628, 42 U.S.C. 12116, 42 U.S.C. 2000ff–10; E.O. 13891, 84 FR 55235; OMB Memorandum M–20–02.

§ 1695.0 Applicability.

This part prescribes general procedures that apply to guidance documents of the Equal Employment Opportunity Commission (EEOC or Commission) under all statutes enforced by the Commission.

§ 1695.1 Definitions.

(a) *Guidance document* means any statement of Commission policy or interpretation concerning a statute, regulation, or technical matter within its jurisdiction that is intended to have general applicability and future effect, but which is not intended to be binding in its own right and is not otherwise required by statute to satisfy the rulemaking procedures specified in 5 U.S.C. 553 or 5 U.S.C. 556. The term is not confined to formal written documents, and may include letters, memoranda, circulars, bulletins, and advisories that set forth for the first time a new regulatory policy. It may also include equivalent video, audio, and web-based formats. The definition does not apply to:

(1) Rules promulgated pursuant to notice and comment requirements under 5 U.S.C. 553 or similar statutory provisions.

(2) Rules exempt from rulemaking requirements under 5 U.S.C. 553(a);

(3) Rules of Commission organization, procedure, or practice;

(4) Decisions of Commission adjudications under 5 U.S.C. 554 or similar statutory provisions;

(5) Internal executive branch legal advice or legal advisory opinions addressed to executive branch officials;

(6) Commission statements of specific applicability, including advisory or legal opinions directed to particular parties about circumstance-specific questions, notices regarding particular locations or facilities, and correspondence with individual persons or entities;

(7) Legal briefs, other court filings, or positions taken in litigation or enforcement actions;

(8) Commission statements that do not set forth a policy on a statutory, regulatory, or technical issue or an interpretation of a statute or regulation, including speeches and individual presentations, PowerPoint slides, editorials, media interviews, press materials, or congressional testimony that do not set forth for the first time a new regulatory policy;

(9) Guidance pertaining to military or foreign affairs functions;

(10) Grant solicitations and awards;

(11) Contract solicitations and awards; or

[2] The Unfunded Mandates Reform Act of 1995 adopts the term ''small governments'' from 5 U.S.C. 601(5): ''governments of cities, counties, towns, townships, villages, school districts, or special districts, with a population of less than fifty thousand.''

(12) Purely internal Commission policies or guidance directed solely to EEOC employees or contractors or to other Federal agencies that are not anticipated to have substantial future effect on the behavior of regulated parties outside of the government; for example, Volume I of the Commission's Compliance Manual, which is only for internal use.

(b) *Significant guidance document.* (1) *Significant guidance document* means a guidance document that will be disseminated to regulated entities or the general public and that may reasonably be anticipated:

(i) To lead to an annual effect on the economy of $100 million or more or adversely affect in a material way the U.S. economy, a sector of the U.S. economy, productivity, competition, jobs, the environment, public health or safety, or State, local, or tribal governments or communities;

(ii) To create serious inconsistency or otherwise interfere with an action taken or planned by another Federal agency;

(iii) To alter materially the budgetary impact of entitlements, grants, user fees, or loan programs or the rights and obligations of recipients thereof; or

(iv) To raise novel legal or policy issues arising out of legal mandates, the President's priorities, or the principles set forth in E.O. 12866, as further amended.

(2) It does not include any other category of guidance documents exempted in writing by OMB's Office of Information and Regulatory Affairs (OIRA).

§ 1695.2 Guidance requirements.

(a) Each guidance document shall comply with all relevant statutes and regulations.

(b) It shall be written in plain and understandable English and avoid using mandatory language, such as ''shall,'' ''must,'' ''required,'' or ''requirement,'' unless the language describes an established statutory or regulatory requirement or is addressed to EEOC staff and will not foreclose the Commission's consideration of positions advanced by affected private parties;

(c) It shall identify or include:

(1) The term ''guidance'' or its functional equivalent and that the Commission is issuing the document;

(2) A unique identifier that provides information on whether the document was subject to a vote (CV) or not (NVTA), the year of issuance, and unique number of its issuance and, if applicable, a Z–RIN;

(3) The activity or entities to which the guidance applies;

(4) A short summary of the subject matter covered in the guidance document at the top of the document.

(5) A statement noting whether the guidance is intended to revise or replace any previously issued guidance and, if so, sufficient information to identify the previously issued guidance; and

(6) Citations to applicable statutes and regulations;

(7)(i) A clear and prominent statement of the following: ''The contents of this document do not have the force and effect of law and are not meant to bind the public in any way. This document is intended only to provide clarity to the public regarding existing requirements under the law or Commission policies.''

(ii) When binding guidance is authorized by law or is incorporated into contract, the language in paragraph (c)(7)(i) of this section may be modified to reflect either of those facts.

(d) If the guidance document sets forth the Commission's position on a legal principle for the first time or changes the Commission's legal position on any issue, the Commission must approve the guidance document by majority vote. Any significant guidance or guidance that is otherwise subject to notice and comment procedures must be approved by a Commission vote. Any guidance document that requires a vote of the Commission to be approved shall be circulated to the Commissioners, and, if approved, shall be signed by the Chair on behalf of the Commission. If the document is not setting forth a new or changed legal position, is reiterating already established Commission policies, or is otherwise simply providing technical assistance on the laws the Commission enforces without announcing any new policy or legal position, it shall be circulated to the Commission for informational purposes for a period of not less than five days, unless emergency circumstances do not allow, and shall only require approval, but not signature, by the Chair.

§ 1695.3 Good faith cost estimates.

(a) A good faith effort shall be made, to the extent practicable, to estimate the likely economic cost impact of the guidance document to determine whether the document might be significant. It may, however, be difficult to predict with precision the economic impact of voluntary guidance.

(b) When determining the likely economic cost impact, the same level of analysis should be given as that required for a major determination under the Congressional Review Act (5 U.S.C. 801 *et seq.*) and the economic impact on small entities under the Regulatory Flexibility Act (5 U.S.C. 601 *et seq.*).

§ 1695.4 Significance determination.

(a) Prior to issuance, the Commission shall provide OIRA with an opportunity to review a guidance document to determine if it meets the definition of ''significant guidance document.''

(b) If the guidance document is determined not to be significant, the Commission shall proceed with issuance of the guidance without going through the procedures described in § 1695.5.

(c) In emergency situations, or when required by statutory deadline or court order to act more quickly than normal review procedures allow, the Chair shall notify OIRA and all Commissioners as soon as possible and, to the extent practicable, comply with the requirements of this part at the earliest opportunity.

§ 1695.5 Significant guidance requirements.

(a) Each proposed significant guidance document shall be:

(1) Approved by the Commission before issuance and assigned a Z–RIN through the Regulatory Management System (RMS), or a successor data management system.

(2) Comply with the applicable requirements for regulations, including significant regulatory actions, in E.O. 12866, E.O. 13563, E.O. 13609, E.O. 13771, and E.O. 13777.

(3) Submitted to OMB for coordinated review. Proposed guidance documents that are otherwise important to the Commission's interests may also be submitted for review.

(4) Reviewed by OIRA under E.O. 12866 before issuance.

(b) The Chair may determine that it is appropriate to coordinate with OMB in the review of guidance documents that are otherwise of importance to the Commission's interests.

§ 1695.6 Notice and public comment.

(a) Each proposed significant guidance document shall have a period of notice and public comment of at least 30 days, unless the Commission, in consultation with OIRA, finds good cause that such notice and public comment are impracticable, unnecessary, or contrary to the public interest, and incorporates such finding and a brief statement of reasons therefor into the guidance document.

(b) Notice shall be published in the **Federal Register** announcing that a draft of the proposed guidance document is publicly available on the Federal e-regulation website, and the proposed

significant guidance document also shall be posted on the Commission website.

(c) The Commission shall prepare and post a public response to major concerns raised in the comments, as appropriate, either before or when the significant guidance document is finalized and issued.

(d) When appropriate, the Chair may determine that a guidance document that is not otherwise required to go through notice and public comment shall also be subject to a period of public comment following the document's approval by the Commission before the document becomes effective.

(e) Unless otherwise determined in writing by the Chair, upon issuing a significant guidance document, a report shall be submitted to Congress and GAO in accordance with the procedures described in 5 U.S.C. 801 (the ''Congressional Review Act'').

§ 1695.7 Petitions.

(a) Any interested person may petition the Commission, in writing, for the issuance, amendment, or repeal of a guidance. Such petition shall state the guidance, regulation, or rule, together with a statement of grounds in support of such petition.

(b) Petitions may be filed with the EEOC, Office of Executive Secretariat, either electronically at the EEOC guidance portal, *http://www.eeoc.gov/guidance,* or in hard copy to U.S. Equal Employment Opportunity Commission, Executive Secretariat, 131 M Street NE, Washington, DC 20507.

(c) Upon the filing of such petition, the Commission shall consider the same and may thereupon either grant or deny the petition in whole or in part, conduct an appropriate proceeding thereon, or make other disposition of the petition.

(d) The Commission should respond to all petitions in a timely manner, but no later than 90 days after receipt of the petition, as to how it intends to proceed. Should the petition be denied in whole or in part, prompt notice shall be given of the denial, accompanied by a simple statement of the grounds unless the denial be self-explanatory.

(e) The issuance, amendment, or repeal of a guidance in response to a petition shall be considered by the Commission pursuant to its regular procedures.

§ 1695.8 Public access to current guidance documents.

(a) All current guidance documents shall be published with a unique identifier including, at a minimum, the document's title, date of issuance or revision, and its Z–RIN (if applicable).

(b) All current guidance documents shall made available through a single ''guidance portal'' on the Commission website, together with a single, searchable, indexed database available to the public;

(c) The guidance portal shall include a statement that guidance documents lack the force and effect of law, except as authorized by law or as incorporated into a contract;

(d) The Commission shall maintain and advertise on its website a means for the public to comment electronically on any guidance documents that are subject to the notice and comment procedures described in § 1695.6 and to submit requests electronically for issuance, reconsideration, modification, or rescission of guidance documents in accordance with § 1695.7; and

(e) Designate an office to receive and address complaints from the public that the Commission is not following the relevant requirements for issuing guidance or is improperly treating a guidance document as a binding requirement.

§ 1695.9 Rescinded guidance.

The Commission shall not cite, use, or rely on guidance documents that are rescinded, except to establish historical facts.

§ 1695.10 No judicial review or enforceable rights.

This part is intended to improve the internal management of the Commission. As such, it is for the use of EEOC personnel only and is not intended to, and does not, create any right or benefit, substantive or procedural, enforceable at law or in equity by any party against the United States, its agencies or other entities, its officers or employees, or any other person.

[FR Doc. 2020–22542 Filed 10–30–20; 8:45 am]

BILLING CODE 6570–01–P

DEPARTMENT OF HOMELAND SECURITY

Coast Guard

33 CFR Part 165

[Docket Number USCG–2020–0600]

RIN 1625–AA00

Safety Zone; East River, New York, NY

AGENCY: Coast Guard, DHS.

ACTION: Temporary final rule.

SUMMARY: The Coast Guard is establishing a temporary safety zone for navigable waters of the east channel of the East River between the Roosevelt Island Bridge (mile 6.4) and Gibbs Point approximately 800 yards northeast of the bridge. The safety zone is needed to protect personnel, vessels, and the marine environment from potential hazards created by the installation of one TriFrame with three attached underwater turbines, associated cabling and 4 to 6 Private Aids to Navigation. When enforced, entry of vessels or persons into this zone is prohibited unless specifically authorized by the Captain of the Port New York.

DATES: This rule is effective without actual notice from November 2, 2020 through 11:59 p.m., December 31, 2020. For the purposes of enforcement, actual notice will be used from 7 a.m., October 22, 2020 through November 2, 2020.

ADDRESSES: To view documents mentioned in this preamble as being available in the docket, go to *https://www.regulations.gov,* type USCG–2020–0600 in the ''SEARCH'' box and click ''SEARCH.'' Click on Open Docket Folder on the line associated with this rule.

FOR FURTHER INFORMATION CONTACT: If you have questions on this rule, call or email Mr. Jeff Yunker, Sector New York Waterways Management Division; U. S. Coast Guard; telephone 718–354–4195, email *jeffrey.m.yunker@uscg.mil.*

SUPPLEMENTARY INFORMATION:

I. Table of Abbreviations

CFR Code of Federal Regulations
DHS Department of Homeland Security
FR Federal Register
NPRM Notice of proposed rulemaking
PATON Private Aids to Navigation
RITE Roosevelt Island Tidal Energy Project
§ Section
U.S.C. United States Code

II. Background Information and Regulatory History

The Coast Guard is issuing this temporary rule without prior notice and opportunity to comment pursuant to authority under section 4(a) of the Administrative Procedure Act (APA) (5 U.S.C. 553(b)). This provision authorizes an agency to issue a rule without prior notice and opportunity to comment when the agency for good cause finds that those procedures are ''impracticable, unnecessary, or contrary to the public interest.'' Under 5 U.S.C. 553(b)(B), the Coast Guard finds that good cause exists for not publishing a notice of proposed rulemaking (NPRM) with respect to this rule because the contractor did not provide enough notice that three barges, three tugs and three work vessels will be conducting heavy lift operations and installing 4 to

6 Private Aids to Navigation (PATON) in the east channel of the East River, north of the Roosevelt Island Bridge while installing one TriFrame with three underwater turbines for the RITE Project. The USACE is issuing a permit for this installation and immediate action is needed to respond to the potential safety hazards associated with heavy lift operations. It is impracticable to publish an NPRM because we must establish this safety zone by October 22, 2020. The Coast Guard is publishing this rule to be effective through December 31, 2020 in case the project is delayed due to unforeseen circumstances.

Under 5 U.S.C. 553(d)(3), the Coast Guard finds that good cause exists for making this rule effective less than 30 days after publication in the **Federal Register**. Delaying the effective date of this rule would be impracticable because immediate action is needed to respond to the potential safety hazards associated with multiple construction vessels operating within a confined area of the East River.

III. Legal Authority and Need for Rule

The Coast Guard is issuing this rule under authority in 46 U.S.C. 70034 (previously 33 U.S.C. 1231). The Captain of the Port New York (COTP) has determined that potential hazards associated with installation of the RITE Project TriFrame with three turbines and associated PATON marking this installation on October 22, 2020, will be a safety concern for anyone in the East River, east of Roosevelt Island, between the Roosevelt Island Bridge (mile 6.4) and Gibbs Point. This rule is needed to protect personnel, vessels, and the marine environment in the navigable waters within the safety zone while nine tugs, barges and work vessels are installing one TriFrame with three underwater turbines and 4–6 PATON marking the RITE Project area.

IV. Discussion of the Rule

This rule establishes a safety zone from October 22 through December 31, 2020. The safety zone will cover all navigable waters of the East River east of Roosevelt Island between the Roosevelt Island Bridge (mile 6.4) and Gibbs Point being used by vessels and personnel to install Phase 1 of the RITE Project.

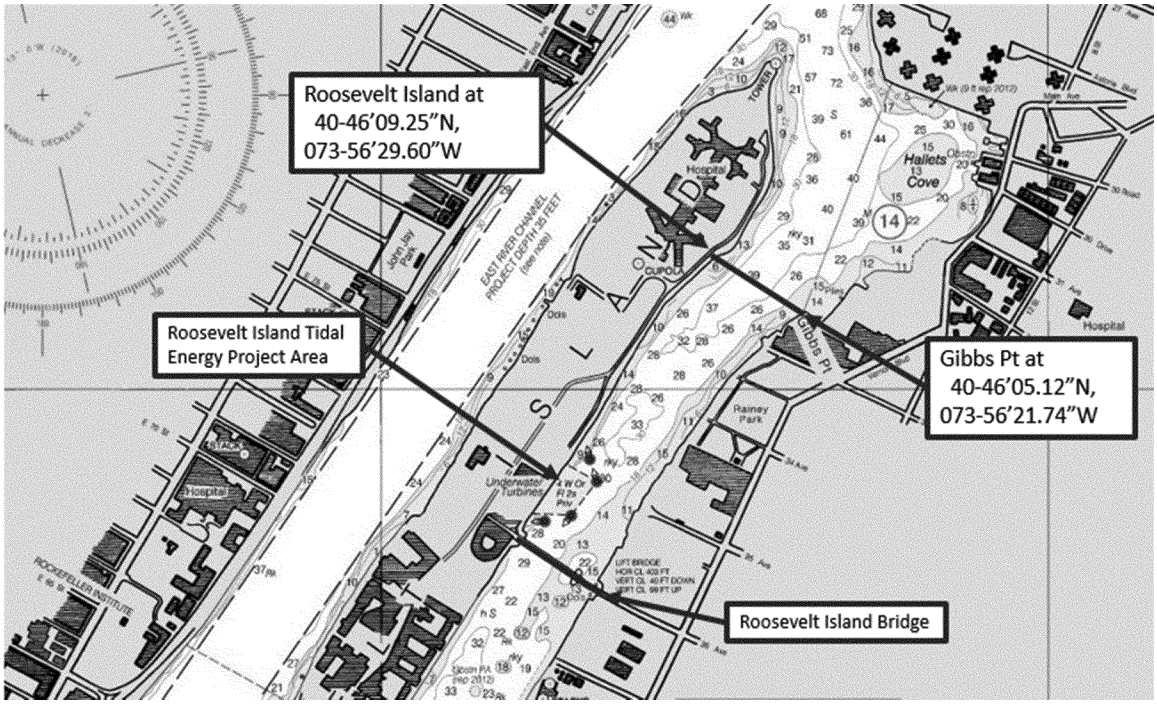

We anticipate enforcing the safety zone during the heavy lift operations for installation of the RITE Project TriFrame with three turbines scheduled from approximately 7 a.m. until 11 p.m. on October 22, 2020. The duration of the zone is intended to protect personnel, vessels, and the marine environment in these constrained navigable waters while the project and PATON marking the project area are being installed. When enforced no vessel or person will be permitted to enter the safety zone without obtaining permission from the COTP or a designated representative. The Coast Guard is publishing this rule to be effective through December 31, 2020 in case the project is delayed due to unforeseen circumstances.

V. Regulatory Analyses

We developed this rule after considering numerous statutes and Executive orders related to rulemaking. Below we summarize our analyses based on a number of these statutes and Executive orders, and we discuss First Amendment rights of protestors.

A. Regulatory Planning and Review

Executive Orders 12866 and 13563 direct agencies to assess the costs and benefits of available regulatory alternatives and, if regulation is necessary, to select regulatory approaches that maximize net benefits. Executive Order 13771 directs agencies to control regulatory costs through a budgeting process. This rule has not been designated a ''significant regulatory action,'' under Executive Order 12866. Accordingly, this rule has not been reviewed by the Office of Management and Budget (OMB), and pursuant to OMB guidance it is exempt from the requirements of Executive Order 13771.

This regulatory action determination is based on the size, location, duration, and time-of-year of the safety zone. Vessel traffic will be able to safely transit around this safety zone which would impact a small designated area of

the East River for approximately 16 hours during the Fall when vessel traffic is normally low. Moreover, the Coast Guard would issue a Broadcast Notice to Mariners via VHF–FM marine channel 16 about the zone, publish the zone in the Local Notice to Mariners, and the rule would allow vessels to seek permission to enter the zone.

B. Impact on Small Entities

The Regulatory Flexibility Act of 1980, 5 U.S.C. 601–612, as amended, requires Federal agencies to consider the potential impact of regulations on small entities during rulemaking. The term ''small entities'' comprises small businesses, not-for-profit organizations that are independently owned and operated and are not dominant in their fields, and governmental jurisdictions with populations of less than 50,000. The Coast Guard certifies under 5 U.S.C. 605(b) that this rule will not have a significant economic impact on a substantial number of small entities.

While some owners or operators of vessels intending to transit the safety zone may be small entities, for the reasons stated in section V.A above, this rule will not have a significant economic impact on any vessel owner or operator.

Under section 213(a) of the Small Business Regulatory Enforcement Fairness Act of 1996 (Pub. L. 104–121), we want to assist small entities in understanding this rule. If the rule would affect your small business, organization, or governmental jurisdiction and you have questions concerning its provisions or options for compliance, please call or email the person listed in the **FOR FURTHER INFORMATION CONTACT** section.

Small businesses may send comments on the actions of Federal employees who enforce, or otherwise determine compliance with, Federal regulations to the Small Business and Agriculture Regulatory Enforcement Ombudsman and the Regional Small Business Regulatory Fairness Boards. The Ombudsman evaluates these actions annually and rates each agency's responsiveness to small business. If you wish to comment on actions by employees of the Coast Guard, call 1–888–REG–FAIR (1–888–734–3247). The Coast Guard will not retaliate against small entities that question or complain about this rule or any policy or action of the Coast Guard.

C. Collection of Information

This rule will not call for a new collection of information under the Paperwork Reduction Act of 1995 (44 U.S.C. 3501–3520).

D. Federalism and Indian Tribal Governments

A rule has implications for federalism under Executive Order 13132, Federalism, if it has a substantial direct effect on the States, on the relationship between the National Government and the States, or on the distribution of power and responsibilities among the various levels of government. We have analyzed this rule under that Order and have determined that it is consistent with the fundamental federalism principles and preemption requirements described in Executive Order 13132.

Also, this rule does not have tribal implications under Executive Order 13175, Consultation and Coordination with Indian Tribal Governments, because it does not have a substantial direct effect on one or more Indian tribes, on the relationship between the Federal Government and Indian tribes, or on the distribution of power and responsibilities between the Federal Government and Indian tribes.

E. Unfunded Mandates Reform Act

The Unfunded Mandates Reform Act of 1995 (2 U.S.C. 1531–1538) requires Federal agencies to assess the effects of their discretionary regulatory actions. In particular, the Act addresses actions that may result in the expenditure by a State, local, or tribal government, in the aggregate, or by the private sector of $100,000,000 (adjusted for inflation) or more in any one year. Though this rule will not result in such an expenditure, we do discuss the effects of this rule elsewhere in this preamble.

F. Environment

We have analyzed this rule under Department of Homeland Security Directive 023–01, Rev. 1, associated implementing instructions, and Environmental Planning COMDTINST 5090.1 (series), which guide the Coast Guard in complying with the National Environmental Policy Act of 1969 (42 U.S.C. 4321–4370f), and have determined that this action is one of a category of actions that do not individually or cumulatively have a significant effect on the human environment. This rule involves a safety zone lasting only 16 hours that will prohibit entry between the Roosevelt Island Bridge (mile 6.4) and Gibbs Point being used by vessels, machinery and personnel to install Phase 1 of the RITE Project and 4–6 PATON marking the project area. It is categorically excluded from further review under paragraph L60(a) of Appendix A, Table 1 of DHS Instruction Manual 023–01–001–01, Rev. 1. A Record of Environmental Consideration supporting this determination is available in the docket. For instructions on locating the docket, see the **ADDRESSES** section of this preamble.

G. Protest Activities

The Coast Guard respects the First Amendment rights of protesters. Protesters are asked to call or email the person listed in the **FOR FURTHER INFORMATION CONTACT** section to coordinate protest activities so that your message can be received without jeopardizing the safety or security of people, places or vessels.

List of Subjects in 33 CFR Part 165

Harbors, Marine safety, Navigation (water), Reporting and record keeping requirements, Security measures, Waterways.

For the reasons discussed in the preamble, the Coast Guard amends 33 CFR part 165 as follows:

PART 165—REGULATED NAVIGATION AREAS AND LIMITED ACCESS AREAS

■ 1. The authority citation for part 165 continues to read as follows:

Authority: 46 U.S.C. 70034, 70051; 33 CFR 1.05–1, 6.04–1, 6.04–6, and 160.5; Department of Homeland Security Delegation No. 0170.1.

■ 2. Add § 165.T01–0600 to read as follows:

§ 165.T01–0600 Safety Zone; East River, New York, NY.

(a) *Location.* The following area is a safety zone: All waters of the East River, from surface to bottom, east of Roosevelt Island, upstream of the Roosevelt Island Bridge (mile 6.4) and downstream of a line connecting the following points: Gibbs Point at (pa) 40°46′05.12″ N, 073°56′21.74″ W to Roosevelt Island at (pa) 40°46′09.25″ N, 073°56′29.60″ W. These coordinates are based on NAD 83.

(b) *Definitions.* As used in this section, designated representative means a Coast Guard Patrol Commander, including a Coast Guard coxswain, petty officer, or other officer operating a Coast Guard vessel and a Federal, State, and local officer designated by or assisting the Captain of the Port New York (COTP) in the enforcement of the safety zone.

(c) *Regulations.* (1) Under the general safety zone regulations in subpart C of this part, you may not enter the safety zone described in paragraph (a) of this section unless authorized by the COTP or the COTP's designated representative.

(2) To seek permission to enter, contact the COTP or the COTP's representative by VHF-Channel 16 or at

718–354–4353. Those in the safety zone must comply with all lawful orders or directions given to them by the COTP or the COTP's designated representative.

(d) *Enforcement period[s].* This section is effective from October 22 through December 31, 2020 but will only be enforced when Roosevelt Island Tidal Energy Project heavy lift operations are in progress.

Dated: October 20, 2020.

Jason P. Tama,

Captain, U.S. Coast Guard, Captain of the Port New York.

[FR Doc. 2020–24020 Filed 10–30–20; 8:45 am]

BILLING CODE 9110–04–P

DEPARTMENT OF THE INTERIOR

National Park Service

36 CFR Parts 1 and 4

[NPS–WASO–REGS; 30756; GPO Deposit Account 4311H2]

RIN 1024–AE61

General Provisions; Electric Bicycles

AGENCY: National Park Service, Interior.

ACTION: Final rule.

SUMMARY: The National Park Service promulgates regulations governing the use of electric bicycles, or e-bikes, within the National Park System. This rule defines the term ''electric bicycle'' and establishes rules for how they may be used. This rule implements Secretary of the Interior Order 3376, ''Increasing Recreational Opportunities through the use of Electric Bikes,'' on lands administered by the National Park Service.

DATES: This rule is effective on December 2, 2020.

ADDRESSES: The comments received on the proposed rule and an economic analysis are available on *www.regulations.gov* in Docket ID: NPS–2020–0001.

FOR FURTHER INFORMATION CONTACT: Jay Calhoun, Regulations Program Manager, National Park Service; (202) 513–7112; *waso_regulations@nps.gov.*

SUPPLEMENTARY INFORMATION:

Background

Use and Management of Bicycles

Bicycling is a popular recreational activity in many units of the National Park System. Cyclists of all skill levels and ages enjoy riding on roads and designated bicycle trails for scenery, exercise, and adventure. Visitors bicycle alone, with friends, or with family. From leisurely rides to challenging alpine climbs, bicycles offer spectacular opportunities to experience the resources of the National Park System.

National Park Service (NPS) regulations at 36 CFR 4.30 govern the use of bicycles on NPS-administered lands. These regulations identify where bicycles are allowed, manage how bicycles may be used, and allow superintendents to restrict bicycle use when necessary. Bicycles are allowed on park roads and parking areas open to public motor vehicles. Bicycles are also allowed on administrative roads that are closed to motor vehicle use by the public but open to motor vehicle use by the NPS for administrative purposes, but only after the superintendent determines that such bicycle use is consistent with protection of the park area's natural, scenic and aesthetic values, safety considerations and management objectives, and will not disturb wildlife or park resources. The use of bicycles on trails is subject to a thorough approval and review process. When bicycle use is proposed for a new or existing trail, the NPS must complete a planning process that evaluates bicycle use on the specific trail, including impacts to trail surface and soil conditions, maintenance costs, safety considerations, potential user conflicts, and methods to protect resources and mitigate impacts. For both new and existing trails, the NPS must complete NEPA analysis that concludes that bicycle use on the trail will have no significant impacts. The superintendent must prepare and the regional director must approve the same written determination that is required for allowing bicycles on administrative roads. Each of these documents must be made available for public review and comment. For new trails outside of developed areas, the NPS must publish a special regulation designating the trail for bicycle use, which is subject to a separate public comment period.

Adherence to the procedures in these regulations helps ensure that bicycles are allowed only in locations where, in the judgment of the NPS, their use is appropriate and will not cause unacceptable impacts. The NPS has completed the process required by these regulations in many NPS units, including the following that have special regulations designating trails for bicycle use: Rocky Mountain National Park (36 CFR 7.7), Saguaro National Park (36 CFR 7.11), Cuyahoga Valley National Park (36 CFR 7.17), Hot Springs National Park (36 CFR 7.18), Grand Teton National Park (36 CFR 7.22), Mammoth Cave National Park (36 CFR 7.36), Sleeping Bear Dunes National Lakeshore (36 CFR 7.80), New River Gorge National River (36 CFR 7.89), Chattahoochee River National Recreation Area (36 CFR 7.90), Bryce Canyon National Park (36 CFR 7.94), Pea Ridge National Military Park (36 CFR 7.95), and Golden Gate National Recreation Area (36 CFR 7.97).

Introduction of Electric Bicycles

While bicycling has been a decades-long tradition in many park areas, the appearance of electric bicycles, or e-bikes, is a relatively new phenomenon. An e-bike is a bicycle with a small electric motor that provides power to help move the bicycle. As they have become more popular both on and off NPS-managed lands, the NPS has recognized the need to address this emerging form of recreation so that it can exercise clear management authority over e-bikes and provide clarity to visitors and stakeholders such as visitor service providers.

Similar to traditional bicycles, the NPS believes that, with proper management, the use of e-bikes may be an appropriate activity in many park areas. E-bikes advance the NPS's ''Healthy Parks Healthy People'' goals to promote national parks as a health resource.[1] Specifically, e-bikes can increase bicycle access to and within parks. E-bikes make bicycle travel easier and more efficient because they allow bicyclists to travel farther with less effort. E-bikes can expand the option of bicycling to more people by providing a new option for those who want to ride a bicycle but might not otherwise do so because of physical fitness, age, or convenience, especially at high altitude or in hilly or strenuous terrain. Also, when used as an alternative to gasoline- or diesel-powered modes of transportation, e-bikes can reduce greenhouse gas emissions and fossil fuel consumption, improve air quality, and support active modes of transportation for park staff and visitors. Similar to traditional bicycles, e-bikes can decrease traffic congestion, reduce the demand for vehicle parking spaces, and increase the number and visibility of cyclists on the road.

Policy Direction for Managing E-Bikes

Secretary's Order 3376

On August 29, 2019, Secretary of the Interior Bernhardt signed Secretary's Order 3376, ''Increasing Recreational Opportunities through the use of

[1] For more information about how the NPS promotes the health and well-being of park visitors through the Healthy Parks Healthy People movement, visit *https://www.nps.gov/subjects/healthandsafety/health-benefits-of-parks.htm.*

Electric Bikes.'' The purpose of this Order is to increase recreational opportunities for all Americans, especially those with physical limitations, and to encourage the enjoyment of lands and waters managed by the Department of the Interior. The Order emphasizes the potential for e-bikes to reduce the physical demands of operating a bicycle and therefore expand access to recreational opportunities, particularly for those with limitations stemming from age, illness, disability or fitness, and in more challenging environments, such as high altitudes or hilly terrain. E-bikes have an electric motor yet are operable in a similar manner to traditional bicycles and in many cases appear indistinguishable from them. For these reasons, the Order acknowledges there is regulatory uncertainty regarding whether e-bikes should be managed similar to other types of bicycles, or, alternatively, considered motor vehicles. The Order states that this regulatory uncertainty has led to inconsistent management of e-bikes across the Department and, in some cases, served to decrease access to Federally owned lands by users of e-bikes. In order to address these concerns, the Order directs the NPS and other Department of the Interior agencies to define e-bikes separately from motor vehicles and to allow them where other types of bicycles are allowed.

NPS Policy Memorandum 19–01

On August 30, 2019, the Deputy Director of the NPS, Exercising the Authority of the Director, issued Policy Memorandum 19–01, Electric Bicycles. This policy satisfies a requirement in the Secretary's Order that all Department of the Interior agencies adopt policy and provide appropriate public guidance regarding the use of e-bikes on public lands that conforms to the policy direction set forth in the Order.

The Memorandum defines an e-bike as ''a two- or three-wheeled cycle with fully operable pedals and an electric motor of less than 750 watts that provides propulsion assistance.'' This definition is consistent with the definition of ''low speed electric bicycle'' in the Consumer Product Safety Act (15 U.S.C. 2085) and the definition of ''electric bicycle'' in the laws governing the Federal Aid Highway Program (23 U.S.C. 217(j)(2), except that the definition in the Memorandum does not include requirements from those statutes that an e-bike may not exceed 100 pounds or reach 20 mph when powered solely by the motor. Instead, the Memorandum, consistent with the Secretary's Order and many states that have promulgated regulations for e-bikes, refers to a three-class system that limits the maximum assisted speed of an e-bike:

- *Class 1 electric bicycle* means an electric bicycle equipped with a motor that provides assistance only when the rider is pedaling, and that ceases to provide assistance when the bicycle reaches the speed of 20 miles per hour.
- *Class 2 electric bicycle* means an electric bicycle equipped with a motor that may be used exclusively to propel the bicycle, and that is not capable of providing assistance when the bicycle reaches the speed of 20 miles per hour.
- *Class 3 electric bicycle* means an electric bicycle equipped with a motor that provides assistance only when the rider is pedaling, and that ceases to provide assistance when the bicycle reaches the speed of 28 miles per hour.

Consistent with the Order, the Memorandum announces a policy that e-bikes are allowed where traditional bicycles are allowed and that e-bikes are not allowed where traditional bicycles are prohibited. The Memorandum refers to regulations for bicycles in paragraphs (f), (g), and (h) of 36 CFR 4.30 that relate to closures and other use restrictions, other requirements, and prohibited acts. The Memorandum requires that these provisions also govern the use of e-bikes so that the use of e-bikes and bicycles are generally regulated in the same manner.

Paragraph (f) of section 4.30 allows superintendents to limit or restrict or impose conditions on bicycle use or close any park road, trail, or portion thereof to bicycle use after taking into consideration public health and safety, natural and cultural resource protection, and other management activities and objectives. The Memorandum authorizes superintendents to limit or restrict or impose conditions on e-bike use for the same reasons, provided the public is notified through one or more methods listed in 36 CFR 1.7. When using this authority, the Memorandum advises superintendents to understand state and local rules addressing e-bikes so that the use of e-bikes within a park area is not restricted more than in adjacent jurisdictions, to the extent possible.

Paragraph (g) of section 4.30 states that bicycle use is subject to certain NPS regulations that apply to motor vehicles. Specifically, bicycle use is subject to regulations in sections 4.12 (Traffic control devices), 4.13 (Obstructing traffic), 4.20 (Right of way), 4.21 (Speed limits), 4.22 (Unsafe operation), 4.23 (Operating under the influence of alcohol or drugs). The Memorandum applies these provisions in the same manner to e-bikes. Paragraph (g) also states that, unless specifically addressed by NPS regulations, the use of a bicycle is governed by state law, which is adopted and made part of section 4.30. The Memorandum requires superintendents to adopt state law in the same manner for e-bikes. State laws concerning the definition, safety operation, and licensing of e-bikes vary from state to state. A growing number of states use the three-class system to differentiate between the models and top assisted speeds of e-bikes.

Paragraph (h) of section 4.30 prohibits possessing a bicycle in wilderness and contains safety regulations for the use of bicycles. Specifically, paragraphs (h)(3)–(5) establish rules relating to operation during periods of low visibility, abreast of another bicycle, and with an open container of alcohol. The Memorandum applies these provisions in the same manner to e-bikes.

The Memorandum directs the superintendents of any NPS unit with e-bikes present to implement the actions required by the policy using their regulatory authority in 36 CFR 1.5(a)(2). This authority allows superintendents to designate areas for a specific use or activity, or impose conditions or restrictions on a use or activity. As of the date of this rule, more than 380 units of the National Park System have implemented the e-bike policy under the authority in 36 CFR 1.5(a)(2) and have published notice of this action in the park-specific compilation of management actions required by 36 CFR 1.7(b), referred to as the superintendent's compendium. This means that for each of these NPS units, e-bikes are already allowed subject to the rules governing them that are set out in the compendium and no further action would be needed to reauthorize continued use of e-bikes under this regulation.

Final Rule

As explained above, Secretary's Order 3376 directs the NPS to revise 36 CFR 1.4 and any associated regulations to be consistent with the Order. The Bureau of Land Management (BLM), U.S. Fish and Wildlife Service (FWS), and Bureau of Reclamation (Reclamation) are also revising their regulations for consistency with S.O. 3376. Specifically, the Order directs the NPS, BLM, FWS, and Reclamation to add a definition for e-bikes consistent with 15 U.S.C. 2085, and expressly exempt all e-bikes as defined in the Order from the definition of motor vehicles.

This rule accomplishes these directives as related to the NPS, and once effective, will supersede and replace Policy Memorandum 19–01. The rule amends 36 CFR 1.4 to add a new definition of ''electric bicycle'' that is the same as the definition used in the Policy Memorandum, with one minor difference. The definition in the Memorandum refers to the definition of ''electric bicycle'' in the Consumer Product Safety Act (15 U.S.C. 2085), which limits the power of the motor to less than 750 watts. Many manufacturers sell e-bikes with motors having exactly 750 watts. In order to avoid the unintended consequence of excluding many devices from the regulatory definition of an e-bike due to a one-watt difference in power, the definition of e-bikes in this rule includes devices of not more than 750 watts.

The rule explicitly excludes e-bikes from the definition of ''motor vehicle'' found at 36 CFR 1.4. This clarifies that, except as stated in section 4.30(g), e-bikes are not subject to the regulations in 36 CFR part 4 that apply to the use of motor vehicles. The NPS does not need to change the existing definition of ''bicycle'' to distinguish them from e-bikes because the definition of bicycle includes only those devices that are ''solely human powered.'' E-bikes are excluded from this definition because they have an electric motor that helps power the device.

Consistent with the Secretary's Order and the Policy Memorandum, this rule states that e-bikes may be allowed on roads, parking areas, administrative roads and trails that are open to traditional bicycles. The rule also states that superintendents will designate the areas open to e-bikes and notify the public pursuant to 36 CFR 1.7. E-bikes are not allowed in other locations. E-bikes are allowed on administrative roads and trails where bicycles are allowed without the need to undertake the procedural steps in paragraphs (b)–(e) of section 4.30 that were required when traditional bicycles were first allowed in those locations. If a superintendent proposes to designate an administrative road or trail for e-bike use where traditional bicycles are not yet allowed, then the superintendent would need to follow the procedural steps required by paragraphs (b)–(e) in order to designate those locations for bicycle and e-bike use.

Although bicycles and e-bikes will be defined differently, the rule applies certain regulations that govern the use of bicycles to the use of e-bikes in the same manner as the Policy Memorandum. These regulations are explained in more detail above and include rules of operation and adoption of state law to the extent not addressed by NPS regulations. The rule also gives superintendents the authority to limit or restrict e-bike use after taking into consideration public health and safety, natural and cultural resource protection, and other management activities and objectives. If warranted by these criteria, superintendents may use this authority to manage e-bikes, or particular classes of e-bikes, differently than traditional bicycles in particular locations. For example, a superintendent could determine that a trail open to traditional bicycles should not be open to e-bikes, or should be open to class 1 e-bikes only. Every restriction or closure that limits the use of e-bikes must be supported by a written record explaining the basis for such action. The record will explain why e-bikes are managed differently than traditional bicycles if that is the effect of the restriction or closure. All such restrictions and closures should be listed in the superintendent's compendium (or written compilation) of discretionary actions referred to in 36 CFR 1.7(b).

Except for administrative actions taken by the NPS in limited circumstances, the Wilderness Act prohibits mechanical transport in wilderness areas designated by Congress. 16 U.S.C. 1133(c). Accordingly, paragraph (h)(2) of section 4.30 prohibits possessing a bicycle, a form of mechanical transport, in a wilderness area established by Federal statute. For the same reason, the rule prohibits the possession of e-bikes in designated wilderness areas, even though this prohibition already exists under the Wilderness Act.

Except on park roads and other locations where the use of motor vehicles by the public is allowed, the rule prohibits an operator from exclusively using the electric motor to move an e-bike without pedaling for an extended period of time. This restriction is consistent with the Policy Memorandum and intended to allow the public to use e-bikes for transportation and recreation in a similar manner to traditional bicycles. It only affects the use of Class 2 e-bikes, which have a motor that may be used exclusively to propel the e-bike.

Summary of Public Comments

The NPS published a proposed rule in the **Federal Register** on April 8, 2020 (85 FR 19711). The NPS accepted comments on the rule through the mail, by hand delivery, and through the Federal eRulemaking Portal at *www.regulations.gov.* The comment period closed on June 8, 2020. The NPS received more than 17,000 comments on the proposed rule from individuals and 71 organizations. A summary of the pertinent issues raised in the comments and NPS responses are provided below. After considering public comments and after additional review, the NPS made several minor changes in the final rule which are explained in the responses to comments below.

1. Comment: One commenter raised concerns about the use of shared e-bikes within park areas, in particular the impacts from riders leaving e-bikes in undesirable locations when the rental expires.

NPS Response: Many e-bike rental companies encourage customers to end their trips responsibly; establish acceptable parking locations within service areas; require that e-bikes be parked in accordance with applicable laws and regulations; define prohibited acts—including locking the e-bike to trees or other structures, as well as blocking pathways, sidewalks, or ramps; and assess penalties for parking e-bikes outside of service areas and in violation of the rental agreement. The NPS expects that these rental agreements and penalties will largely deter riders from leaving e-bikes within park units in undesirable locations when the rental expires. The NPS will also work with local jurisdictions to ensure e-bikes are managed appropriately.

In circumstances where a rental company is engaging in business within an NPS unit, written authorization from the NPS is required under 36 CFR 5.3. The NPS will work with companies who seek written authorization to conduct these businesses to develop terms and conditions in the permit, contract, or other written authorization that mitigate against this potential harm.

2. Comment: One commenter asked the NPS to require superintendents that decide to allow e-bikes in park areas to develop a plan that educates riders about where e-bikes are allowed and proper trail etiquette to minimize impacts to other users of the trail.

NPS Response: This rule gives superintendents the discretion to establish any safety measures deemed necessary to ensure that e-bikes are used in a manner that maintains a safe and enjoyable experience for all visitors. Superintendents are encouraged to go beyond what is stated in the rule and conduct community outreach and education campaigns to ensure that the proper riding behaviors are adhered to for the benefit of all NPS visitors. Before visiting an NPS unit, visitors are encouraged to check the park website to

find out what areas of the park are accessible, what activities are available, and which facilities are open. Upon arrival, visitors can obtain additional information at the Visitor Center or a Ranger Station. Signage is often used at common access points, such as trailheads, road crossings, and junctions with other types of trails as a means of communicating with park visitors. NPS websites, park brochures, and signage present a variety of information to visitors, including educational materials that provide guidance on trail etiquette to mitigate the potential for user conflict and to help establish user norms. Typical information resources identify the kind of use allowed, provide route names, trail direction and appropriate practices for yielding to others, and will be similarly utilized to educate visitors about e-bike rules and etiquette.

3. Comment: One commenter raised an issue specific to the use of e-bikes in National Park System units in Alaska. This commenter requested that the NPS allow the use of e-bikes where traditional bicycles are currently allowed in Alaska, which are generally allowed throughout NPS units in Alaska—including off-trail and in wilderness—under the Alaska National Interest Lands Conservation Act (ANILCA). This commenter stated that treating e-bikes differently than traditional bicycles in Alaska would create public confusion from an inconsistent management framework and reduce opportunities for public access and recreation.

NPS Response: ANILCA authorizes the use of nonmotorized surface transportation methods for traditional activities and for travel to and from villages and homesites within National Park System units in Alaska. 16 U.S.C. 3170(a). This allowance for special access applies in Alaska notwithstanding any other law and does not limit nonmotorized transportation to designated roads or trails. The Department of the Interior has interpreted this statutory allowance to include the use of traditional bicycles; however, e-bikes do not fall under this allowance because they have an electric motor and therefore are not ''nonmotorized.''

Notwithstanding the statutory allowance for traditional bicycles in Alaska, the NPS is not in favor of creating different rules for e-bikes in Alaska than it does for e-bikes everywhere else within the National Park System. The stated purpose of Secretary of the Interior Order 3376 is to simplify and unify the regulations of e-bikes on lands managed by the Department of the Interior. The NPS shares this goal of a consistent management framework within the National Park System. Outside of Alaska, NPS regulations allow the use of bicycles on roads and trails only. 36 CFR 4.30. Dispersed, overland use is not allowed. In order to manage e-bikes in a similar manner to traditional bicycles, the rule allows e-bikes only on roads and trails otherwise open to bicycle use and designated by the superintendent. Although the special allowance in Alaska for traditional bicycles is not limited to roads and trails, the NPS declines to extend this special allowance for e-bikes in Alaska. The NPS has no data on the level of bicycle use on more than 20 million acres in Alaska that are off-trail and not in designated wilderness. The lack of data would make it very difficult to anticipate the impacts of allowing e-bikes in those same, vast locations—impacts that could include concerns about public safety associated with remote, cross-country travel, protection of resources in sensitive biomes such as tundra, and management objectives such as preserving wilderness character in eligible wilderness.

4. Comment: Several commenters questioned how the NPS's definition of ''electric bicycle'' in the rule would affect how e-bikes are treated under other laws that do not adopt the same definition or management framework for e-bikes established by the NPS in this rule. For example, one commenter referred to the definition of ''electric bicycle'' in the laws governing the Federal Aid Highway Program. 23 U.S.C. 217(j)(2). The commenter states that this definition is different than the NPS definition in the rule and has implications for the types of uses that are allowed on pedestrian and bicycle trails funded by the Federal Highway Administration under the Recreational Trails Program. One commenter suggested that the use of e-bikes could adversely affect the ability of the NPS or user groups to obtain funds for trails that come with restrictions on motorized use.

NPS Response: The NPS's definition of ''electric bicycles'' applies to management of electric bicycles within the National Park System under the framework established by this rule. It does not modify or affect other federal laws and regulations in circumstances where they apply to the use of electric bicycles within the National Park System. Using the general scenario presented by the commenter, if a trail within the National Park System is constructed or maintained with federal highway funds in a manner that restricts the use of e-bikes as that term is defined under a separate federal law, then the superintendent would not have the authority to designate e-bikes for use on that trail in a manner that conflicts with the other applicable federal law. There could be circumstances where superintendents must choose between using federal funds for trail construction and limiting that trail to traditional bicycles or finding an alternative funding source and allowing e-bikes on the trail. The NPS believes that superintendents are in the best position to make these judgements and this rule provides them with the discretion to do so.

5. Comment: One commenter questioned the NPS's authority under the NPS Organic Act (54 U.S.C. 100101) to create a management framework for e-bikes that allows superintendents to make decisions about e-bike use that—in certain cases—could allow e-bikes in more places and with more associated impacts than are allowed by the state where the park is located. This commenter stated that allowing the superintendent to create rules that are different than what is allowed by the state would create public confusion and an expectation that all three classes of e-bikes are allowed within the National Park System.

NPS Response: The framework in this rule gives superintendents the discretion to determine the appropriate level of e-bike use in park areas, with the important limitation that e-bikes may only be allowed on roads and trails where traditional bicycles are allowed. All management decisions made by a superintendent, including a decision under this rule to allow the use of e-bikes, are subject to NPS Management Policies that prohibit the superintendent from allowing a visitor use activity that would cause unacceptable impacts or impairment of park resources under the NPS Organic Act. This is true no matter what decision states make about the use of e-bikes in areas under their jurisdiction. The NPS does not agree that a decision by a superintendent to allow e-bikes in more places and with more associated impacts than a state would allow is *per se* a violation of the impairment mandate in the NPS Organic Act. One of the purposes of this rule is to create a consistent management framework for the use of e-bikes across the National Park System, in part because all NPS units are subject to the same management standard articulated in the NPS Organic Act. Adequate public notice and community outreach will mitigate the potential for confusion in situations where the rules of e-bikes in park areas are different than the rules in adjacent or nearby state

lands. In order to reduce the potential that this will create a perception that all three classes of e-bikes are allowed in all park areas, the NPS has revised the regulatory text in 36 CFR 4.30(i)(1) to clarify that, in some cases, only certain classes may be allowed.

6. Comment: Some commenters stated that allowing e-bikes on trails is subject to NPS regulations governing the use of off-road motor vehicles (ORVs) in 36 CFR 4.10 which states that ORV routes and areas must be designated by special regulation and only in national recreation areas, national seashores, national lakeshores and national preserves. One commenter objected to the NPS excluding e-bikes from the definition of ''motor vehicle'' because e-bikes are inherently motorized. Another commenter stated that e-bikes should be regulated as motor vehicles by the NPS because of a recent ruling by the U.S. Customs and Border Protection (CBP) that e-bikes are to be grouped with low-powered (less than 1kW) electric motorcycles for purposes of excluding them from a 25% tariff imposed by the Trump Administration on products imported from China.

NPS Response: This rule revises 36 CFR 1.4 to make clear that e-bikes are not regulated as ''motor vehicles'' under NPS regulations, including the regulations in 36 CFR 4.10 that govern the use of ORVs. As a result, the use of e-bikes is not subject to the restrictions that apply to the designation of ORV routes and areas in 36 CFR 4.10. The fact that e-bikes have a small electric motors does not compel the NPS to define or regulate them in the same manner as motor vehicles that in the vast majority of cases are larger, heavier, and powered by internal combustion engines that output much more than 1 hp. The NPS is free to exclude e-bikes from the regulatory definition of ''motor vehicles'' and manage them separately as it has previously done with snowmobiles. The fact that a majority of states have adopted regulatory schemes for e-bikes that are separate from regulations applying to motor vehicles supports the NPS making the same distinction in its regulations. Rulings from the CPB about the imposition of tariffs on foreign products imported into the United States are not relevant to how the NPS manages visitor use activities in park areas, including the use of e-bikes.

7. Comment: Several commenters questioned whether the NPS has the authority to create an exception to Executive Order 11644 (Use of off-road vehicles on the public lands) by promulgating this rule, which authorizes superintendents to allow motorized devices on public lands without following the requirements set forth in the E.O.

NPS Response: Executive Order 11644 was issued by President Nixon in 1972 and amended by President Carter in 1977 through Executive Order 11989. The Executive Order establishes policies and procedures that federal agencies must follow to manage the use of ''off-road vehicles'' on public lands. The stated purpose of the Executive Order is to protect the resources of the public lands, promote safety of all users of the lands, and minimize conflicts among those users. The Executive Order applies to the use of ''off road vehicles,'' which are defined as motorized vehicles designed for or capable of cross-country travel on or immediately over land, water, sand, snow, ice, marsh, swampland, or other natural terrain, with certain exceptions that are not relevant to this discussion. Although e-bikes are ''motorized'' in the literal sense because they have a small electric motor, the NPS does not believe that they were intended to be regulated as ''off-road vehicles'' under the Executive Order, to the extent they were even considered for inclusion.

The first sentence of the Executive Order identifies the types of vehicles that were of concern in 1972—''motorcycles, minibikes, trial bikes, snowmobiles, dune-buggies, all-terrain vehicles, and others.'' Although this list is not exhaustive, the devices that were named in almost all cases used internal combustion engines for power, rather than an electric motor, and none relied on the rider pedaling the vehicle to provide most of the power to the vehicle. For these reasons, e-bikes are inherently different than the types of ''off-road vehicles'' listed under the Executive Order.

Further, e-bikes were not identified anywhere in the Executive Order and for good reason. Although e-bike prototypes were developed as far back as the 19th century, the technological advances needed to popularize them, such as torque motors and power controls, were not developed until the mid-1990s. In 1979, after the Executive Order was amended by President Carter, the Council for Environmental Quality (CEQ) issued a report entitled ''Off-Road Vehicles on Public Land.'' The report discusses the requirements of the Executive Order in great detail and evaluates efforts undertaken by federal land management agencies to comply with its requirements. E-bikes are not mentioned anywhere in the report. The preface of the report acknowledges that the inclusion of snowmobiles in the definition of ''off-road vehicle'' was controversial at the time and identifies other types of ''motorized vehicles'' that were typically understood to be included within the definition—''motorcycles of various sorts (minibikes, dirt bikes, enduros, motocross bikes, etc.), four-wheel drive vehicles such as Jeeps, Land Rovers, or pickups, snowmobiles, dune buggies, and all-terrain vehicles.'' Just as in the Executive Order, e-bikes are not on this list. Neither the Executive Order nor the CEQ report suggests that President Nixon or President Carter intended for the Executive Order to apply to small, quiet, light vehicles powered by a small electric motor, such as e-bikes as defined in this regulation. This supports an interpretation of the Executive Order that the term ''off-road vehicles'' should not be understood to include e-bikes as defined in this rule.

In addition to this evidence that the Executive Order was not intended to apply to e-bikes, the NPS believes that it is appropriate to exclude e-bikes from the requirements of the Executive Order because e-bikes do not cause the kinds of impacts that the Executive Order was intended to mitigate. For example, e-bikes have an electric motor which at most emits a low steady whine when engaged, rather than an internal combustion engine capable of generating much louder noise. Therefore, e-bikes are not likely to cause the sort of sound-related impacts that would result in harm to wildlife behavioral patterns or create conflicts with visitors seeking a natural and quiet experience, factors that the Executive Order requires the agencies to consider when permitting off-road vehicles. Although the NPS acknowledges that the effects of noise on wildlife differ across taxonomic groups and that reactions to sound are different for every visitor, the use of e-bikes as defined in this rule is not expected to degrade the quietude in an unacceptable manner above and beyond the use of traditional bicycles. During the NPS's review of the current literature, the NPS did not find any studies measuring the decibels generated from e-bike motors or components. Nevertheless, because the noise produced by an e-bike comes from either the sound of the tire on the road or trail, or the electric motor when it is engaged, the sound levels that comes from traditional and electric bikes are reasonably similar. Also, unlike all the vehicles listed in the Executive Order, e-bikes do not emit exhaust that could impact air quality and the health of nearby users.

Also, a review of available models shows that e-bikes are generally much lighter than even the lightest off-road

vehicle listed in the Executive Order, which limits their potential damage to natural resources in the form of soil compaction and erosion. A typical e-bike model weighs about 45–50 pounds, which is only slightly heavier than a typical traditional bicycle at 30–35 pounds. In comparison, minibikes, which are the lightest off-road vehicle listed in the Executive Order, weigh an average of 115–130 pounds. Typical trial bikes weigh about 145 pounds and motorcycles typically weigh 300–400 pounds. A recent study conducted by the International Mountain Biking Association measured relative levels of soil displacement and erosion resulting from traditional, non-motorized mountain bikes, e-bikes, and gasoline-powered dirt bikes and found that soil displacement and tread disturbance from e-bikes and traditional, non-motorized mountain bikes were not significantly different, and both were much less than those associated with gasoline-powered dirt bikes. Although this study focused on the impacts from Class 1 e-bikes, the impacts from Class 2 and 3 e-bikes would not be substantially different, especially given the prohibition on using the throttle to power a Class 2 e-bike without pedaling for an extended period of time and applicable speed limits on trails. Additionally, this rule authorizes e-bike use only on roads and trails designated by the superintendent and does not authorize cross-country use of e-bikes which thus mitigates the impacts that the Executive Order was intended to address regarding direct over-land travel.

Finally, distinguishing e-bikes from other motor vehicles is consistent with the fact that e-bikes are not considered to be motor vehicles under 49 U.S.C. 30102, are not subject to regulation by National Highway Traffic Safety Administration, and are regulated similar to non-motorized bicycles by the U.S. Consumer Product Safety Commission (CPSC). For these reasons, the NPS does not believe that Executive Order 11644 was intended to or should be applied to e-bikes.

8. Comment: One commenter stated that the rule fails to consider whether the addition of e-bikes to park areas will affect visitor carrying capacities that are required to be established for each NPS unit under the National Parks and Recreation Act of 1978 and must be considered by the superintendent when evaluating new recreational uses of park areas under NPS Management Policies, specifically sections 8.2 (Visitor Use), 8.2.1 (Visitor Carrying Capacity); and 8.2.2.1 (Management of Recreational Use).

NPS Response: The Act cited by the commenter is codified at 54 U.S.C. 100502(3) and requires that general management plans for each unit of the National Park System include ''identification of and implementation commitments for visitor carrying capacities for all areas of the System unit.'' NPS Management Policies define ''carrying capacity'' as the ''use that can be accommodated while sustaining the desired resource and visitor experience conditions in the park.'' Setting and staying within carrying capacities can be a useful tool for superintendents to help ensure that park uses do not cause unacceptable impacts to park resources and values.

This rule does not require superintendents to allow e-bikes in the park areas they manage, it simply authorizes them to do so on roads and trails where traditional bicycles are also allowed. The NPS operates under the assumption that any decision made by a park superintendent will comply with applicable laws and policies and be consistent with applicable general management plans. The NPS expects that park superintendents will evaluate whether the addition of e-bikes would affect visitor carrying capacities identified in general management plans or other planning documents, together with all other factors that would inform whether the use of e-bikes is appropriate or not.

9. Comment: Many commenters raised concerns about the potential impacts e-bikes would have on park resources and the visitor experience. Several commenters stated that e-bikes would cause greater cumulative impacts to the natural environment than are caused by traditional bicycles due to their ability to travel longer distances with more gear into more remote and undisturbed areas. Commenters cited the potential for disturbing wildlife, grooving and erosion of ground surfaces, degradation of sensitive plant habitats, and negative impacts on geological features and cultural and archeological sites. Other commenters stated that e-bikes would create safety risks for certain riders who could travel into more remote areas and through more challenging terrain than would be possible with traditional bicycles. Safety concerns were also raised about the speed of e-bikes, in particular on single-track, winding trails with limited sight lines, and the increased potential for accidents and conflicts with other trail users, such as hikers and horseback riders. According to some commenters, adding e-bikes to shared trails would cause overcrowding and marginalize other forms of recreation that are compatible with a quiet and natural environment.

NPS Response: The NPS agrees that park resources must be protected and user conflicts should be avoided where e-bikes are allowed. However, this rule does not mandate the use of e-bikes in any park area. This rule establishes a general framework that can be used by superintendents to allow e-bikes on designated roads and trails where traditional bicycles are already allowed. Existing NPS regulations require a robust evaluation of the potential impacts that traditional bicycles would have on designated trails before they can be allowed. See 36 CFR 4.30(d) and (e). The addition of e-bikes on roads or any of these trails is subject to the discretion of the superintendent who is required by policy to consider the impacts that a new park use such as e-bikes would have on park resources and visitor experience. NPS Management Policies clearly state that in using discretionary authority, superintendents will allow only uses that are appropriate to the purpose for which the park was established and can be sustained without causing unacceptable impacts. Superintendents may not allow e-bikes if doing so would impair a park's resources, values, or purposes.

Existing studies about the relative impact between traditional bicycles and e-bikes demonstrate that impacts from e-bikes are similar to impacts from traditional bicycles notwithstanding some disparities associated with visitor safety that the NPS believes can be mitigated if necessary by the superintendent at the park level. For example, one study, *Comparison of environmental impacts from MTB-Class 1 eMTB, and motorcycles: soil displacement and erosion on bike-optimized trails in a Western Oregon Forest, IMBA Trail Solutions (2016),* found that impacts from Class 1 eMTBs were similar to traditional mountain bicycles, while motorcycles led to much greater soil displacement and erosion. The study found that an emerging body of research suggests that when it comes to impacts to soils, water quality, and vegetation, the primary issue is not the type of user, but the way the trail is designed and constructed. Therefore, the NPS does not expect the addition of e-bikes to cause significant additional erosion on trails or degradation of plant habitats.

Additionally, a review of available literature by Boulder County, Colorado concluded that all forms of recreation may have some negative impacts to wildlife habitat and behavior, but there is little research to suggest that e-bikes have greater negative impacts on trails

or wildlife than regular bikes and mountain bikes. *See Boulder County E-bike Pilot Study Results and Policy Recommendation,* 2019. Another study of the impacts of motorized and nonmotorized recreation on elk in Eastern Oregon, *USFS. Seeking ground less traveled: Elk responses to recreation (2009),* found that all recreation uses impacted ungulate behavior, but that ATV use was most disruptive to elk compared to mountain biking, hiking, and horseback riding. NPS does not expect e-bike use to have a significantly larger impact to wildlife behavior compared to traditional bicycles.

Regarding visitor safety and user conflicts, as stated above, e-bikes will only be authorized on roads and trails where traditional bicycles are already allowed. These trails have undergone rigorous analysis to ensure that hikers and bicyclists can safely share the trail without causing visitor conflicts. The addition of e-bikes would not significantly alter this analysis. First, all cyclists must follow applicable speed limits for trails which negates many of the concerns about e-bikes' faster speed capabilities. In addition, the terrain and slope of some trails provides a natural limitation to the speed at which a cyclist can reasonably move. Further, although some studies showed average riding speeds on electric mountain bikes are slightly faster than conventional mountain bikes, other studies found that, perhaps counterintuitively, average e-bike speeds were less than average conventional bike speeds which may reflect the slightly older demographics of e-bike riders, and that differences in speed between e-bikes and bicycles are most pronounced on the uphill segment of a trip. (Hall et. al. 2019; Langford, Cherry et al. 2017).

The rule also makes clear that superintendents have the authority to modify, restrict, or discontinue e-bike use if it creates concerns about public health and safety or the protection of natural or cultural resources. For these reasons, the NPS does not believe that e-bikes will cause unacceptable impacts in parks.

10. Comment: One commenter raised a concern about the safety of the electrical systems used in e-bikes, in particular the risk that e-bike batteries could malfunction, combust, and spark wildfires. This commenter recommended that the NPS require that e-bikes be certified to the UL 2849 electric system safety standard in order to help ensure the safety of e-bikes and reduce the likelihood of a catastrophic wildfire resulting from the use of an e-bike that does not have a properly managed electrical system.

NPS Response: The CPSC is responsible for evaluating and making recommendations about electrical safety standards for consumer products manufactured and sold in the United States. E-bike manufacturers are required to comply with mandatory standards set by the CPCS. The NPS defers to the expertise held by the CPSC for setting safety standards associated with the electrical systems used in e-bikes and for this reason declines to require the UL 2849 standard for e-bikes used in park areas. If the use of e-bikes in park areas results in unforeseen safety issues or threats to natural resources, the rule allows superintendents to restrict or stop the use of e-bikes until such risks can be properly addressed. This is consistent with NPS Management Policies Section 8.1.2 which requires superintendents to further manage, constrain or discontinue park uses that cause unanticipated and unacceptable impacts revealed through monitoring.

11. Comment: Several commenters stated that the introduction of e-bikes will require the NPS to undergo a substantial revision of existing sign standards to clearly identify where e-bikes are allowed, and further which classes are allowed. One commenter recommended that the NPS maintain a trail sign standard with allowable use demarcations to depict traditional bicycles and e-bikes independently.

NPS Response: The NPS agrees that the successful introduction of e-bikes into park areas depends upon clear and consistent communication to the public about where e-bikes are allowed, and further which classes are allowed. The NPS is working with the other land management agencies within the Department of the Interior to establish standard signs for e-bikes. E-bikes will have symbols that are distinct from those used to depict traditional bicycles. The goal of this effort is to create a consistent visual framework indicating where e-bikes are allowed on public lands managed by the Department of the Interior.

12. Comment: Several commenters questioned whether the NPS has the financial resources to properly manage the use of e-bikes under this rule given the preexisting backlog of deferred maintenance projects in the National Park System. Commenters cited costs associated with: (1) Installing and maintaining signage to identify where e-bikes are allowed; (2) improving trail infrastructure to accommodate e-bikes (*e.g.,* trail widening, lane marking, parking facilities); (3) repairing trail damage from the use from e-bikes; (4) ensuring an adequate law enforcement presence; and (5) engaging in and incurring liability from search and rescue activities caused by visitors traveling beyond their ability level into more remote and challenging terrain.

NPS Response: The NPS acknowledges that there will be costs associated with the management of e-bikes within the National Park System, including those cited by the commenters. To help avoid situations where superintendents do not have the resources to properly manage e-bikes, this rule does not mandate the use of e-bikes anywhere in the National Park System. It gives superintendents to discretion to allow them where they are appropriate. NPS Management Policies Section 8.1.2 requires superintendents to consider total costs to the NPS when evaluating whether a proposed park use is appropriate. In the event that accidents or injuries occur as a result of or in conjunction with e-bike use, liability, if any, would be determined in accordance with applicable laws, which may include the Federal Tort Claims Act.

13. Comment: Several commenters questioned whether aspects of the rule would be difficult to enforce, in particular the prohibition on using the throttle to move the e-bike without pedaling that applies only to Class 2 e-bikes. Commenters also questioned whether NPS law enforcement officers would be able to differentiate between e-bikes and traditional bicycles, and classes of e-bikes in circumstances where a superintendent has prohibited certain classes of e-bikes in particular locations. Commenters emphasized that these enforcement challenges would be exacerbated by potential violations occurring at high speeds and in remote locations.

NPS Response: The NPS acknowledges that the aspects of the rule cited by the commenters may pose certain enforcement challenges. However, those challenges are not unique. They regularly arise in the context of enforcing laws that govern recreational use of park areas. For example, regulations governing use of off-road vehicles at 36 CFR 4.10 prohibit operation of an off-road vehicle in a manner that causes unreasonable damage to the surface of a park road or route. Determining when a violation of this regulation occurs can be fact-specific, requiring the exercise of specialized judgment on the part of law enforcement officers. Similarly, determining whether a violation of the prohibition on extended use of throttle power without pedaling occurs will involve the exercise of specialized skill, training, and judgment by law

enforcement officers. Based on its experience enforcing other regulations that condition how the public recreates on public lands, the NPS believes that law enforcement officers have the expertise necessary to properly exercise their discretion to enforce the limitations on how Class 2 e-bikes may be used in a reasonable manner that ensures protection of public health, safety, and resources and users of the public lands. The NPS has also modified the regulatory text to make clear that using the throttle on a Class 2 e-bike without pedaling is only prohibited if it is done for an extended period of time. This will help law enforcement officials focus only on the more egregious cases of users using the throttle to move Class 2 e-bikes without pedaling.

With respect to differentiating among traditional bicycles and e-bikes, and among classes of e-bikes, the NPS notes that 28 states require e-bikes to have a label that displays the class, top assisted speed, and power outlet of the electric motor. Some e-bikes can be differentiated from traditional bicycles by simple observation. In other cases, the NPS expects that its law enforcement officers will use their specialized skill, training, and judgment to enforce this requirement even if the e-bike is not labeled through observation of riding behaviors, questioning, or other means of investigation. Identifying violations of NPS regulations that occur at speed is not a novel challenge for NPS law enforcement officers. These individuals are tasked on a daily basis with enforcing speed limits and equipment and operational requirements for the use of motor vehicles and vessels used within remote park areas. See, for example, 36 CFR parts 3 and 4.

14. Comment: Several commenters suggested changes to the requirement in the proposed rule that except where use of motor vehicles by the public is allowed, using the electric motor to move an e-bike without pedaling is prohibited. One commenter recommended that the NPS remove this requirement in order to allow riders to take advantage of the throttle-only capabilities of Class 2 e-bikes on e-bike lanes and paths where such use is appropriate. Another commenter noted that Class 2 e-bikes often have a function that allows the rider to disable the throttle-only capability and that the rule should require that this be disabled as a better regulatory alternative to prevent throttle-only use.

NPS Response: The NPS acknowledges that there may be situations where the use of the throttle-only power may be appropriate and useful in limited duration. This could be the case in particular for park visitors who use e-bikes as to access and enjoy park areas in a manner that would not be possible with traditional bicycles. In limited duration, the throttle could be used without pedaling to get started, for a quick burst of power to climb a hill, or to move safely through an intersection. In order to more precisely tailor this restriction on the use of Class 2 e-bikes, the NPS has revised the final rule to only prohibit the use of throttle-only power for an extended period of time. This change will allow riders of Class 2 e-bikes to benefit from throttle-only power for limited durations while ensuring that e-bike use, where allowed, will continue to be used in a manner that is consistent with traditional, non-motorized bicycles. Due to this change in the final rule, the NPS declines to adopt the proposal to require riders of Class 2 e-bikes to disable the throttle-only function.

15. Comment: One commenter suggested that the NPS revise the definition of ''electric bicycles'' to include a requirement that the device have a seat or saddle for the rider so that e-bikes are distinguished from other types of electric mobility devices that are designed to be stood upon, such as e-scooters.

NPS Response: The NPS believes that the requirement in the definition that e-bikes have ''fully operable pedals'' is sufficient to distinguish e-bikes from other mobility devices with electric motors.

16. Comment: One commenter questioned the effectiveness of requirement in the definition of ''electric bicycle'' that the electric motor produce no more than 750 watts of power. This commenter noted that e-bike manufacturers are offering multi-speed transmissions that increase the efficiency of the motor, which means that the speed of e-bikes is less a function of the size of the motor than the number of gears and gear ratios.

NPS Response: The NPS appreciates that the technology used in e-bikes is likely to continue to evolve at a rapid pace, and that the electric motors and batteries will become more efficient over time. The advancements in transmission described by the commenter may increase the acceleration rate of e-bikes but cannot increase the top assisted speed beyond 20 mph (for Class 1 and 2 e-bikes) or 28 mph (for Class 3 e-bikes) without transforming the device into a motor vehicle for purposes of NPS regulations. The NPS believes that the limitations on top assisted speed and power output are sufficient to prevent technological advancements from allowing devices that qualify as e-bikes to behave like motorcycles or other motor vehicles in a manner that represents a significant departure from the types of devices that fall within the NPS definition of an ''electric bicycle'' today.

17. Comment: Several commenters asked the NPS to limit the discretion given to superintendents in this rule to determine where e-bikes may be used, and which classes may be used, within the NPS units they administer. Here are some of the ways these commenters proposed to categorically manage the use of e-bikes:

- Prohibit the use of Class 2 and 3 e-bikes on non-motorized trails where traditional bicycles are allowed.
- Allow Class 1 e-bikes on administrative roads and improved surface trails, but not single-track trails.
- Allow Class 2 e-bikes only on administrative roads.
- Allow Class 3 e-bikes only in locations open to public motor vehicle traffic.
- Prohibit Class 2 and 3 e-bikes on natural surface trails.
- Prohibit the use of three-wheeled e-cycles with a combined tire tread width wider than 15 inches on trails where traditional bicycles are allowed.
- Prohibit e-bikes on any trails that do not already allow motorized use, which would eliminate all trails from consideration except for ORV and snowmobile routes.
- Prohibit e-bikes on trails with groomed snow that are also used by over-snow vehicles.
- Allow e-bikes only on paved trails.
- Prohibit Class 2 e-bikes on all improved surface and shared use trails open to traditional bicycles due to their throttle-only capabilities.
- Allow Class 1 e-bikes anywhere traditional bicycles are allowed without any requirement that those locations be designated by the superintendent.

NPS Response: The varied and diverse approaches suggested by the commenters demonstrates how difficult it would be to establish categorical rules for where e-bikes may be used in park areas at the national level. The framework in this rule establishes sensible sideboards for the use of e-bikes by: (1) Adopting a commonly used state-adopted definition of ''electric bicycle'' that limits motor size and top assisted speed; (2) restricting e-bikes to roads and trails where traditional bicycles are allowed; and (3) ensuring that e-bikes are used like traditional bicycles by prohibiting the extended use of Class 2 e-bikes with throttle-only power. Further restricting the discretion

of superintendents to determine whether e-bikes should be allowed could prevent visitors from using e-bikes to access and enjoy park areas without any opportunity to evaluate whether such use is appropriate. For example, categorically prohibiting e-bikes on trails that are not ORV or snowmobile routes runs counter to evidence identified in previous responses to comments suggesting that impacts from e-bikes are more like impacts from traditional bicycles than motor vehicles.

Superintendents are most familiar with the natural and cultural resources, operating budgets, and visitor use patterns in a park area, and therefore are in the best position to determine whether e-bikes, or specific classes of e-bikes, should be allowed on roads or trails where traditional bicycles are allowed. The rule provides superintendents with the flexibility to parse and delineate the exact type of e-bike use, if any, that is most appropriate in a park area. Taking just some of the examples raised by the commenters, if the top assisted speed of Class 3 e-bikes would cause unacceptable safety concerns on a particular trail, the superintendent can prohibit Class 3 e-bikes on that trail. If a single-track trail is too narrow to accommodate the width of three-wheeled e-bikes without causing unacceptable impacts to natural resources, the superintendent can prohibit those types of e-bikes on that trail. If allowing e-bikes on groomed trails used by snowmobiles would create unacceptable safety concerns or user conflicts, the superintendent can prohibit that use. If allowing Class 2 e-bikes on a single-track trail would cause unacceptable user conflicts or safety issues due to their throttle-only capabilities (even when used only for short durations), then the superintendent could allow Class 2 e-bikes only on administrative roads that are sufficiently wide to accommodate that type of traffic.

In response to a suggestion from one commenter, the NPS has clarified in the final rule that the superintendent may decide to allow only specific classes of e-bikes in certain locations. This was always the intent of the rule and is part of the reason why the NPS used a definition of ''electric bicycle'' that distinguishes between classes. The NPS agrees with this commenter that the type of power activation and top assisted speed that distinguish the three classes necessitate a more granular level of decision making and allowances based on individual classes. Another commenter requested that the NPS state in the rule that e-bikes may be allowed on paved and unpaved trails. The NPS does not think this is necessary because the reference to ''trails'' in the rule without any qualifier means either type of trail.

18. Comment: One commenter questioned whether the prohibition in the rule of possessing an electric bicycle in a wilderness area established by Federal statute would prevent the transport of e-bikes mounted on motor vehicles through wilderness areas. Another commenter stated that the NPS should allow e-bikes in wilderness because they are quieter and otherwise have less impacts that horses.

NPS Response: The use of motor vehicles is prohibited in wilderness areas designated under the Wilderness Act, whether or not they are transporting e-bikes. 16 U.S.C. 1133(c). The Wilderness Act also prohibits other forms of mechanical transport, a term that includes e-bikes, leaving the NPS with no authority to allow e-bikes in wilderness areas designated under the Act. 16 U.S.C. 1133(c).

19. Comment: One commenter stated that e-bikes should only be allowed if their use will not impede or result in the elimination of access for traditional bicycles.

NPS Response: This rule authorizes superintendents to allow e-bikes only on roads and trails where traditional bicycles are allowed. Superintendents may not designate a road or trail for e-bike use and then subsequently prohibit the use of traditional bicycles in that location.

20. Comment: One commenter asked the NPS to clarify why certain regulations in 36 CFR part 4 that apply to traditional bicycles do not apply to e-bikes under the rule. In particular, the commenter asked the NPS to explain why 36 CFR 4.30(h)(1) does not apply to e-bikes.

NPS Response: 36 CFR 4.30(h)(1) prohibits riding a traditional bicycle off park roads and parking areas, except on administrative roads and trails that have been authorized for bicycle use. This rule contains its own provisions about where e-bikes may be used. Applying paragraph 4.30(h)(1) to the use of e-bikes would suggest that e-bikes are allowed everywhere traditional bicycles are allowed. This would not be accurate under this rule, which requires superintendents to take an administrative action to designate roads and trails where traditional bicycles are allowed for e-bike use, before e-bikes are allowed in those locations. Similar explanations exist for why other provisions in part 4 apply to traditional bicycles but not to e-bikes—namely, that this rule contains its own provisions for e-bike use that make referencing regulations elsewhere in part 4 unnecessary. For example, paragraph (i)(6) of this rule adopts and applies non-conflicting state law to the use of e-bikes which makes applying section 4.2 (State law applicable) or paragraphs 4.30(g)(2) and (h)(6) unnecessary. Another example is paragraph (i)(4) of this rule which prohibits possessing an electric bicycle in a wilderness area. This makes applying paragraph 4.30(h)(2) to the use of e-bikes unnecessary.

21. Comment: One commenter addressed the topic of adopting non-conflicting state law. This commenter recommended that the NPS adopt non-conflicting state law in order to avoid confusing the public by a situation where the NPS would allow more liberal (*i.e.,* less restrictive) use of e-bikes in park areas than would otherwise be allowed by the state. This commenter also suggested a minor edit to paragraph (i)(6) that would refer to the regulations in 36 CFR chapter I as controlling over state law, instead of the current reference to the regulations in section 4.30. This would ensure that the NPS definitions of ''electric bicycle'' and ''motor vehicle'', which appear in 36 CFR 1, control in the event of conflicting state definitions.

NPS Response: Paragraph (i)(6) of the rule adopts non-conflicting state law and applies it to the use of e-bikes in park areas. This means that to the extent the superintendent has designated locations for e-bike use that conflict with what the state allows, the superintendent's designations would control. Regardless of which authority (NPS or state) is more liberal about the use of e-bikes, the NPS rule will control in park areas. In an opposite example to the one raised by the commenter, if the state allows e-bikes on unpaved trails, but the superintendent has not designated unpaved trails in the park for e-bike use, then e-bikes would not be allowed on unpaved trails in the park. Visitor use of park areas should not be determined by the state. That is why where state law is adopted elsewhere in NPS regulations, it applies only to the extent there is no conflict with NPS regulations. The NPS declines to adopt a regulatory framework where it would defer entirely to the state on matters of visitor use, even if that deference would only occur if visitor use is more restricted by the state. This would be an abdication of the NPS's legal responsibility to manage visitor use and enjoyment of the National Park System.

The NPS appreciates the suggestion by the commenter to refer to ''this chapter'' in paragraph (i)(6) for the

reasons stated by the commenter and has made this change in the final rule.

22. Comment: One commenter suggested that the rule should allow e-bikes anywhere traditional bicycles are allowed unless the superintendent closes a location to the use of e-bikes.

NPS Response: The ''open unless closed'' regulatory framework suggested by the commenter would allow e-bikes on roads and trails across the National Park System without any opportunity for superintendents to evaluate whether they are an appropriate use of park areas. This would place a substantial burden on superintendents to close roads and trails to the use of e-bikes in order to stop unacceptable impacts to resources and visitor experience that would begin to occur immediately upon the effective date of this rule. It would also require the NPS on a national level to try and evaluate the potential impacts from e-bike use across the National Park System under applicable policy and law prior to the rule becoming effective. With more than 400 units making up the National Park System, each containing unique and dynamic administrative capabilities, values, resources, and visitor use patterns, a programmatic evaluation of these impacts would be impracticable. The NPS prefers the ''closed unless open'' approach in this rule that requires superintendents to take an affirmative action by designating a road or trail for e-bike use before they are allowed. This approach will allow superintendents to evaluate whether a location is appropriate for e-bike use in accordance with the policy guidance discussed above and the legal requirements (*e.g.* National Environmental Policy Act) discussed below.

23. Comment: One commenter asked why the rule does not prohibit devices with electric motors that output more than 750 watts of power.

NPS Response: A device with an electric motor that outputs more than 750 watts of power will not qualify as an e-bike under the definition of ''electric bicycle'' in this rule. As a result, the superintendent will lack to authority to allow those types of devices on roads and trails open to traditional bicycles under this rule. Such devices will fall under the definition of ''motor vehicle'' and be regulated as such. As a result, it would not be appropriate to ban them as the commenter suggests. This analysis is true of any device that fails to meet the criteria in the definition of ''electric bicycle''—including devices with a top assisted speed greater than 28 mph or without operable pedals.

24. Comment: One commenter suggested that the rule should allow seniors to use all classes of e-bikes on roads and trails open to traditional bicycles.

NPS Response: The NPS appreciates that the propulsion assistance offered by e-bikes can provide particular benefits to park visitors with physical limitations, including seniors. The NPS expects that superintendents will consider all potential benefits and costs when they evaluate whether to allow e-bikes in a park area under this rule. It would not be prudent, however, to require superintendents to allow seniors to use all classes of e-bikes in all locations open to traditional bicycles, without any opportunity to first evaluate whether that would cause unacceptable impacts, visitor conflicts, or safety concerns—for both the senior riders and other park visitors.

25. Comment: Several commenters suggested that the NPS establish annual registration, licensing, and insurance requirements for the use of e-bikes in park areas.

NPS Response: The NPS believes that rules about registration, licensing, and insurance should be determined by the states, which are more experienced and equipped to implement such requirements. Creating a separate set of federal requirements would be overly burdensome and create potential confusion with the visiting public. The rule allows the NPS to enforce whatever requirements are established by the state under paragraph (i)(6) which adopts non-conflicting state law and applies it to the use of e-bikes in park areas.

26. Comment: One commenter suggested the NPS undertake a systematic inventory and evaluation of all existing bicycle trail assets within the National Park System to ensure they are designed to safely accommodate the use of e-bikes. The commenter refers the NPS to the American Association of State Highway Transportation Officials (AASHTO) Guide for the Development of Bicycle Facilities and the American Trails Shared Use Path Design guidelines, both of which recommend that the paved tread on shared use paths should be at least 10 ft wide, with a graded shoulder at least 2 ft wide on either side of the path. On shared use paths with heavy volumes of users, the commenter states that tread width should be between 12 ft to 14 ft and that, in all cases, shared use paths should not exceed a grade of 5%.

NPS Response: The NPS agrees that superintendents should carefully consider the context and characteristics of existing bicycle trails that are being considered for e-bike use. Many NPS multiuse trails are significant to the historical, cultural, or environmental context of the park and were designed prior to modern design guidelines and standards. If trail widening is not possible or is not an immediate solution, there are other options superintendents can implement to help alleviate potential trail conflicts, crowding, or resource and visitor impacts. In 2018, the NPS published an Active Transportation Guidebook to support walking and bicycling in park areas. This Guidebook provides references to national design standards and guidelines for multi-use trail widths, which is consistent with the guidelines cited by the commenter. The Active Transportation Guidebook also states that superintendents should assess routes, on a trail-by-trail basis, to determine whether e-bikes are appropriate by considering speed and safety, trail width and use-volume for accommodation of additional users, trail surface, and soil conditions. The NPS appreciates the documents cited by the commenter and will include them in a working inventory of resources that superintendents can use to evaluate the appropriateness of e-bikes on particular trails. At this time, the NPS does not have the resources available to undertake a systematic inventory and evaluation of all trails across the National Park System. The NPS believes a more prudent approach is to allow superintendents to make those suitability determinations on a trail-by-trail basis at the park level when the need arises.

27. Comment: One commenter asked the NPS to address whether e-bikes can or should be given a special accommodation as an ''other power-driven mobility device'' (OPDMD) under U.S. Department of Justice (DOJ) regulations implementing the Americans with Disabilities Act of 1990. In particular, the commenter asked the NPS to address a scenario where a rider provides credible assurance that an e-bike is used because of a disability, which is the standard established by DOJ Guidance on ''Wheelchairs, Mobility Aids, and Other Power-Driven Mobility Devices'' for whether a particular type of OPDMD can be accommodated.

NPS Response: This rule does not address whether persons with disabilities may use e-bikes as a reasonable accommodation on NPS facilities, including paths, trails, and roadways. Determining if a person with a disability can use an e-bike as an OPDMD requires the same analysis as any other OPDMD. Credible assurance is not the only factor used in this analysis. The DOJ guidance cited by the commenter requires a series of factors to

be considered. These factors include, but are not limited to, the type and speed of the device, the facility's volume of pedestrian traffic, the facility's design and operational characteristics, whether safe operation of the device is feasible, and whether the use of the device creates a substantial risk of serious harm to the immediate environment or natural or cultural resources. Park superintendents or their designees with assistance from the NPS Accessibility Program will make these determinations on a case-by-case basis. The NPS Accessibility Program can be reached via email at *accessibility@nps.gov*.

28. Comment: Several commenters suggested changes to the process for designating bicycle trails for e-bike use. One commenter recommended the NPS require notice-and-comment rulemaking prior to allowing e-bikes outside of developed areas in order to ensure there is a full opportunity for public participation and review of such decisions. Another commenter suggested that e-bikes be allowed on non-motorized bicycle trails only after the NPS undergoes the same planning and decision-making process that was required by NPS regulations before allowing traditional bicycles on those trails. Another commenter suggested that e-bikes be allowed only for those who need motorized assistance and then only by permit.

NPS Response: NPS regulations promulgated in 1987 required the NPS to issue a special regulation, specific to the individual NPS unit, if bicycles were to be used outside of developed areas. The NPS adopted this special regulation requirement to ensure maximum public input on decisions to allow traditional bicycles outside of developed areas. In 2012, the NPS revised the process for allowing bicycles to focus on park planning and environmental compliance under the National Environmental Policy Act (NEPA), rather than the special rulemaking process. See 77 FR 39927. NPS regulations still require notice-and-comment rulemaking to allow bicycles on new trails outside of developed areas. As discussed above, the thorough process in today's bicycle regulations at 36 CFR 4.30 ensure that traditional bicycles are allowed in park areas only where the impacts of such use have been thoroughly considered. Based on the available studies, the NPS believes that incremental impacts from e-bike use in a particular location would not be substantially different than already occurring impacts from traditional bicycles. For this reason, the NPS does not find it necessary to require in every instance notice-and-comment rulemaking or the specific planning processes and environmental compliance measures that may have been required when traditional bicycles were allowed in the first place. Superintendents are required by NEPA to evaluate the impacts of any decision to allow e-bikes and the pathway of compliance will be tailored to the circumstances of each decision. Superintendents are encouraged to engage with the public prior to allowing e-bikes so that they can better understand potential impacts to resources and visitors, support for, and controversy associated with, allowing e-bikes.

The use of e-bikes is not the type of visitor use that would justify the regulatory and administrative burdens associated with a permit requirement. As long as the superintendent has determined that a location is appropriate for e-bike use, visitors will be free to use e-bikes in that location subject to the prescriptions in this rule.

29. Commenter: One commenter stated that decisions to close a location or otherwise restrict the use of e-bikes under the superintendent's discretionary authority in paragraph (i)(7) of the rule should be subject to compliance with NEPA and the rule should state that as an affirmative requirement.

NPS Response: The NPS requires that superintendents act in accordance with applicable law and policy. This is true in every case whether or not this requirement is stated explicitly. If a decision to close or otherwise restrict the use of e-bikes warrants a compliance measure be taken under NEPA or under any other applicable law or policy, the superintendent must take that measure. This does not need to be affirmatively stated in the rule for it to be required.

Compliance With Other Laws, Executive Orders and Department Policy

Regulatory Planning and Review (Executive Orders 12866 and 13563)

Executive Order 12866 provides that the Office of Information and Regulatory Affairs (OIRA) in the Office of Management and Budget will review all significant rules. The OIRA has determined that the final rule is not a significant regulatory action as defined by Executive Order 12866.

Executive Order 13563 reaffirms the principles of E.O. 12866 while calling for improvements in the nation's regulatory system to promote predictability, to reduce uncertainty, and to use the best, most innovative, and least burdensome tools for achieving regulatory ends. The executive order directs agencies to consider regulatory approaches that reduce burdens and maintain flexibility and freedom of choice for the public where these approaches are relevant, feasible, and consistent with regulatory objectives. Executive Order 13563 emphasizes further that regulations must be based on the best available science and that the rulemaking process must allow for public participation and an open exchange of ideas. The NPS has developed this rule in a manner consistent with these requirements.

Reducing Regulation and Controlling Regulatory Costs (Executive Order 13771).

Enabling regulations are considered deregulatory under guidance implementing E.O. 13771 (M–17–21). This rule addresses regulatory uncertainty regarding the use of electric bicycles in the National Park System by clearly stating that they may be used where traditional bicycles are allowed when designated by the superintendent.

Regulatory Flexibility Act

This rule will not have a significant economic effect on a substantial number of small entities under the Regulatory Flexibility Act (5 U.S.C. 601 *et seq.*). This certification is based on information contained in the economic analyses found in the report entitled ''Draft Cost-Benefit and Regulatory Flexibility Threshold Analyses: Proposed Regulations Addressing the Designation of Electric Bicycle Use in Units of the National Park System''. The report is available on *www.regulations.gov* in Docket ID: NPS–2020–0001.

Small Business Regulatory Enforcement Fairness Act

This rule is not a major rule under 5 U.S.C. 804(2). This rule:

(a) Does not have an annual effect on the economy of $100 million or more.

(b) Will not cause a major increase in costs or prices for consumers, individual industries, Federal, State, or local government agencies, or geographic regions.

(c) Does not have significant adverse effects on competition, employment, investment, productivity, innovation, or the ability of U.S.-based enterprises to compete with foreign-based enterprises.

Unfunded Mandates Reform Act

This rule does not impose an unfunded mandate on State, local, or tribal governments or the private sector of more than $100 million per year. The

rule does not have a significant or unique effect on State, local or tribal governments or the private sector. It addresses public use of national park lands, and imposes no requirements on other agencies or governments. A statement containing the information required by the Unfunded Mandates Reform Act (2 U.S.C. 1531 *et seq.*) is not required.

Takings (Executive Order 12630)

This rule does not effect a taking of private property or otherwise have takings implications under Executive Order 12630. A takings implication assessment is not required.

Federalism (Executive Order 13132)

Under the criteria in section 1 of Executive Order 13132, the rule does not have sufficient federalism implications to warrant the preparation of a federalism summary impact statement. This rule only affects the use of electric bicycles on federally-administered lands. It has no outside effects on other areas. A federalism summary impact statement is not required.

Civil Justice Reform (Executive Order 12988)

This rule complies with the requirements of Executive Order 12988. This rule:

(a) Meets the criteria of section 3(a) requiring that all regulations be reviewed to eliminate errors and ambiguity and be written to minimize litigation; and

(b) Meets the criteria of section 3(b)(2) requiring that all regulations be written in clear language and contain clear legal standards.

Consultation With Indian Tribes (Executive Order 13175 and Department Policy)

The Department of the Interior strives to strengthen its government-to-government relationship with Indian Tribes through a commitment to consultation with Indian tribes and recognition of their right to self-governance and tribal sovereignty. The NPS has evaluated this rule under the criteria in Executive Order 13175 and under the Department's tribal consultation policy and have determined that tribal consultation is not required because the rule will have no substantial direct effect on federally recognized Indian tribes.

Paperwork Reduction Act

This rule does not contain information collection requirements, and a submission to the Office of Management and Budget under the Paperwork Reduction Act is not required. The NPS may not conduct or sponsor and you are not required to respond to a collection of information unless it displays a currently valid OMB control number.

National Environmental Policy Act of 1969

Categorical Exclusion Applies

This rule does not constitute a major Federal action significantly affecting the quality of the human environment. A detailed statement under NEPA is not required because the rule is covered by a categorical exclusion. The NPS has determined the rule is categorically excluded under 43 CFR 46.210(i) which applies to ''policies, directives, regulations, and guidelines: That are of an administrative, financial, legal, technical, or procedural nature; or whose environmental effects are too broad, speculative, or conjectural to lend themselves to meaningful analysis and will later be subject to the NEPA process, either collectively or case-by-case.''

This regulation meets both prongs of this categorical exclusion. First, the rule is administrative, legal, and procedural in nature because it simply clarifies and codifies in regulation that superintendents have the authority to allow e-bikes in their units but does not itself take any action or require superintendents to take any action in their park units. Further, the regulation simply clarifies and resolves existing ambiguity regarding superintendents' discretion to allow e-bikes in parks, rather than explicitly transitioning e-bikes from a stricter management regime to a more relaxed one. Prior to this regulation, NPS regulations were unclear as to how e-bikes were regulated as neither the regulatory definition of ''motor vehicles'' nor ''bicycles'' explicitly included e-bikes. Due in part to this ambiguity, most park compendiums did not specifically address e-bikes until the NPS recently determined in Policy Memorandum 19–01 that e-bikes should be treated in a similar manner to traditional bicycles. This regulation simply resolves this ambiguity in the NPS's regulations and codifies the decision made in the policy memorandum but does not change the regulatory treatment of e-bikes from one established management regime to another in a way that would result in an expanded range of potential environmental impacts.

Second, this regulation's environmental effects are too broad, speculative, or conjectural to lend themselves to meaningful analysis and the environmental effects of allowing e-bikes in specific parks will be or have already been subject to NEPA analysis on a park-by-park basis. Each park unit has its own enabling legislation, unique resources that must be protected, and specific circumstances related to visitor use, trails, and bicycles use that must be considered prior to determining whether e-bike use should be allowed. Also, the regulation allows park superintendents to designate the specific roads and trails that e-bikes may be allowed on, and authorizes them to set restrictions on the classes, speed, and other aspects of e-bikes use where they are authorized. Given the wide variety of resources, terrains, and visitor use patterns in parks across the country, as well as the broad discretion to determine the scope of e-bike use at the park level, conducting NEPA analysis at the National Park System level would be too speculative and imprecise to make definitive statements about the level of impacts. For this reason, an evaluation of environmental impacts under NEPA would therefore be ineffective at the System level.

Many units of the National Park System already allow the use of e-bikes where traditional bicycles are allowed under the direction of the Policy Memorandum. The Policy Memorandum required those units to evaluate the environmental impacts of allowing e-bikes under NEPA. Because traditional bicycles were already an established presence in areas where e-bikes were recently allowed, traditional bicycles were part of the baseline of existing conditions from which the environmental impacts of e-bikes were measured. Therefore, the impacts potentially caused by the implementation of the Policy Memorandum were limited only to those impacts from e-bikes that differ from the existing impacts of traditional bicycles. As a result, for most units a categorical exclusion has applied.

In some units of the National Park System, the superintendent may have not yet opened bicycle trails to e-bikes, or may have closed a location to the use of e-bikes or otherwise restricted their use. In these units, any future decision to allow e-bikes in a new location or manner will be subject to an evaluation of the environmental impacts of that decision at that time. This will also be true for locations where, in the future, traditional bicycles and e-bikes are introduced for the first time. If a superintendent proposes to designate an administrative road or trail for e-bike use where traditional bicycles are not yet allowed, the superintendent will

need to follow the same procedural steps in order to designate those locations for bicycle and e-bike use. In both circumstances described above, the environmental effects of this rule are too broad to be analyzed at the National Park System level and environmental analysis under NEPA is best conducted at the park level.

The NPS has also determined that the rule does not involve any of the extraordinary circumstances listed in 43 CFR 46.215 that would require further analysis under NEPA.

Response to NEPA Comments

Several commenters asserted that the NPS has failed to conduct a proper analysis of the foreseeable impacts of this rule and that the preparation of an environmental assessment or environmental impact statement is required. The NPS disagrees with this interpretation of NEPA and believes the categorical exclusion cited above is appropriate for this rule. Further, some commenters have requested that the NPS conduct a programmatic NEPA review. CEQ has stated that agencies have discretion to determine whether a programmatic approach is appropriate. In this case, for reasons discussed below, and in light of the fact that the categorical exclusion cited above requires a case-by-case NEPA review at the park level before e-bike use could be authorized at any specific park unit, the NPS does not believe a programmatic approach is appropriate.

The framework established by this rule provides superintendents with an opportunity to evaluate the effects of e-bike use at the park level, where more detailed information about potential effects is available, prior to allowing such use. Superintendents who decide to allow e-bikes in a park area must base that decision on reasonably obtainable scientific, technical, and economic data, and other information. Research and data on impacts and compatibility of e-bikes is still being developed. Available research, some of which was highlighted by commenters, indicates that certain classes of e-bikes have similar impacts to trails and other trail users as traditional bicycles. When e-bikes are considered at the park level, user conflicts, resource impacts, and other issues specific to each park unit could influence a superintendent's decision to allow them or not.

This rule does not require that e-bikes be allowed anywhere in the National Park System. As noted above, units of the National Park System vary significantly in terms of the criteria that would influence the decision to allow e-bikes. Further, each park unit has its own enabling legislation, unique resources that must be protected, and specific circumstances related to visitor use, trails, and bicycles use that must be considered prior to determining whether e-bike use should be allowed. This would make a comprehensive NEPA analysis too broad, speculative, or conjectural to lend itself to a meaningful analysis, rendering such an analysis ineffective. Addressing potential environmental and social impacts are most meaningful at the park level. Superintendents will consider the suitability of e-bike use on specific roads and trails through subsequent analysis consistent with the requirements of NEPA and other applicable laws (*e.g.,* Endangered Species Act, Clean Water Act, National Historic Preservation Act) and policies. The regulatory framework established by this rule will allow superintendents to develop site-specific design features and mitigation strategies to reduce or negate potential adverse impacts, as needed.

Some commenters disagreed that none of the extraordinary circumstances listed under 43 CFR 46.215 apply to this rule. These commenters stated that this rule will have significant impacts on (1) public health and safety; (2) natural and cultural resources; (3) properties eligible for listing on the National Register of Historic Places; and (4) species and designated critical habitat for species listed, or proposed to be listed, under the Endangered Species Act (ESA). As stated above, this rule is not self-executing in the sense that it does not mandate the use of e-bikes anywhere in the National Park System. For this reason, the rule itself would not result in any physical impacts to park resources let alone significant impacts on any of the items identified in 43 CFR 46.215. Decisions to allow e-bikes in park areas will be subject to the NEPA process at the park level just like all other decisions that could have an effect on the human environment. Applying the NEPA process at a park-specific level will allow the NPS to evaluate detailed information on the potential effects of e-bike use in a particular park, consult with the U.S. Fish and Wildlife Service regarding impacts to endangered species, and develop site-specific project design features and mitigation strategies, if needed.

In addition to the extraordinary circumstances in 43 CFR 46.215 that are tied to impacts, commenters also stated that this rule will have highly controversial environmental effects or involve unresolved conflicts concerning alternative uses of available resources; and have highly uncertain and potentially significant environmental effects or involve unique or unknown environmental risks. Commenters also stated that the rule will establish a precedent for future action or represent a decision in principle about future actions with potentially significant environmental effects; and have a direct relationship to other actions with individually insignificant but cumulatively significant environmental effects.

With regard to controversy, 43 CFR 46.215(c) pertains to whether the environmental effects are highly controversial. As stated in the Department of the Interior NEPA regulations, ''[c]ontroversial refers to circumstances where a substantial dispute exists as to the environmental consequences of the proposed action and does not refer to the existence of opposition to a proposed action, the effect of which is relatively undisputed.'' 43 CFR 46.30. While e-bikes are still relatively new, there are a growing number of studies investigating e-bike use. The NPS's review of the current research shows that there does not appear to be any substantial disagreement or differing assumptions among scientists that affect the interpretation of evidence in this emerging body of literature. Overall, e-bikes are more like traditional bicycles than motor vehicles, and generally cause the same types and levels of impacts as traditional bikes. Furthermore, the rule would not result in unresolved conflicts concerning alternative uses of available resources. While the rule clarifies that e-bikes should be treated in a similar manner to traditional bicycles, it does not authorize any consumptive or exclusive use of park resources. It merely allows a new type of use on bicycle trails that is substantively similar to bicycles but does not prohibit or restrict any other user group.

This rule would not have highly uncertain, and potentially significant environmental effects, or involve unique or unknown environmental risks. First, as stated above, the rule itself does not authorize nor mandate e-bike use at any park unit and therefore without additional action at the park level, no impacts would occur. In addition, as stated above, a review of available information indicates the impacts of e-bikes are generally similar to impacts from bicycle use and there is no information indicating that the additional impacts from e-bikes may be significant. This is reinforced by the fact that most NPS units that have allowed e-bikes and have completed a site-specific NEPA review have applied a

categorical exclusion. While the use of e-bikes is relatively new, the available literature demonstrates a consensus regarding what potential impacts may be, and there is nothing to indicate that the impacts of e-bike use would be highly uncertain.

This rule does not establish a precedent for future action or represent a decision in principle about future actions with potentially significant environmental effects. The extraordinary circumstance listed at 43 CFR 46.215(e) requires both a precedent or decision in principle for future action and for the precedent or decision in principle to have potentially significant environmental effects. Neither criteria apply. This rule does not establish a precedent for future action nor make any decisions about future actions. As discussed above, it is not self-executing in the sense that it does not mandate the use of e-bikes anywhere in the National Park System; it merely authorizes superintendents to allow them where traditional bicycles are allowed. The Superintendent at each park unit will have the discretion to allow e-bike use—or not—on a case-by-case basis. The discussion above addresses why this rule would be not result in any significant impacts.

The NPS also disagrees with the comment that the rule would have a direct relationship to other actions with individually insignificant but cumulatively significant environmental effects. Impacts to resources and visitors would not occur on a national scale; rather, impacts would be experienced by visitors at each park unit at the time of their visit and resources affected would be at the park level, not at a national scale. Therefore, there would not be any meaningful ''cumulative impacts'' at a national scale, that are greater than the sum of the individual park-level impacts. Furthermore, as discussed above, due to the specific circumstances at each park unit, the NPS does not believe a programmatic NEPA review is warranted.

Effects on the Energy Supply (Executive Order 13211)

This rule is not a significant energy action under the definition in Executive Order 13211. A Statement of Energy Effects in not required.

References

A complete list of all resources reviewed and considered during the development of this rulemaking is available at *http://www.regulations.gov* at Docket No. NPS–2020–0001.

List of Subjects

36 CFR Part 1

National parks, Penalties, Reporting and recordkeeping requirements, Signs and symbols.

36 CFR Part 4

National parks, Traffic regulations.

In consideration of the foregoing, the National Park Service amends 36 CFR parts 1 and 4 as set forth below:

PART 1—GENERAL PROVISIONS

■ 1. The authority citation for part 1 continues to read as follows:

Authority: 54 U.S.C. 100101, 100751, 320102.

■ 2. In § 1.4 amend paragraph (a) by adding, in alphabetical order, the definition for ''Electric bicycle'' and revising the definition for ''Motor vehicle'' to read as follows:

§ 1.4 What terms do I need to know?

(a) * * *

* * * * *

Electric bicycle means a two- or three-wheeled cycle with fully operable pedals and an electric motor of not more than 750 watts that meets the requirements of one of the following three classes:

(1) ''Class 1 electric bicycle'' shall mean an electric bicycle equipped with a motor that provides assistance only when the rider is pedaling, and that ceases to provide assistance when the bicycle reaches the speed of 20 miles per hour.

(2) ''Class 2 electric bicycle'' shall mean an electric bicycle equipped with a motor that may be used exclusively to propel the bicycle, and that is not capable of providing assistance when the bicycle reaches the speed of 20 miles per hour.

(3) ''Class 3 electric bicycle'' shall mean an electric bicycle equipped with a motor that provides assistance only when the rider is pedaling, and that ceases to provide assistance when the bicycle reaches the speed of 28 miles per hour.

* * * * *

Motor vehicle means every vehicle that is self-propelled and every vehicle that is propelled by electric power, but not operated on rails or water, except an electric bicycle, a snowmobile, and a motorized wheelchair.

* * * * *

PART 4—VEHICLES AND TRAFFIC SAFETY

■ 3. The authority citation for part 4 continues to read as follows:

Authority: 54 U.S.C. 100101, 100751, 320102.

■ 4. Amend § 4.30 by adding paragraph (i) to read as follows:

§ 4.30 Bicycles

* * * * *

(i) *Electric bicycles.* (1) The use of an electric bicycle may be allowed on park roads, parking areas, and administrative roads and trails that are otherwise open to bicycles. The Superintendent will designate the areas open to electric bicycles, or specific classes of electric bicycles, and notify the public pursuant to 36 CFR 1.7.

(2) The use of an electric bicycle is prohibited in locations not designated by the Superintendent under paragraph (i)(1) of this section.

(3) Except where use of motor vehicles by the public is allowed, using the electric motor exclusively to move an electric bicycle for an extended period of time without pedaling is prohibited.

(4) Possessing an electric bicycle in a wilderness area established by Federal statute is prohibited.

(5) A person operating or possessing an electric bicycle is subject to the following sections of this part that apply to bicycles: §§ 4.12, 4.13, 4.20, 4.21, 4.22, 4.23, and 4.30(h)(3)–(5).

(6) Except as specified in this chapter, the use of an electric bicycle is governed by State law, which is adopted and made a part of this section. Any act in violation of State law adopted by this paragraph is prohibited.

(7) Superintendents may limit or restrict or impose conditions on electric bicycle use, or may close any park road, parking area, administrative road, trail, or portion thereof to such electric bicycle use, or terminate such condition, closure, limit or restriction after:

(i) Taking into consideration public health and safety, natural and cultural resource protection, and other management activities and objectives; and

(ii) Notifying the public through one or more methods listed in 36 CFR 1.7, including in the superintendent's compendium (or written compilation) of discretionary actions referred to in 36 CFR 1.7(b).

George Wallace,

Assistant Secretary for Fish and Wildlife and Parks.

[FR Doc. 2020–22129 Filed 10–30–20; 8:45 am]

BILLING CODE 4312–52–P

ENVIRONMENTAL PROTECTION AGENCY

40 CFR Parts 9, 122, 123, 127, 403, and 503

[EPA–HQ–OECA–2019–0408; FRL–10015–08–OECA]

RIN 2020–AA52

NPDES Electronic Reporting Rule—Phase 2 Extension

AGENCY: Environmental Protection Agency (EPA).

ACTION: Final rule.

SUMMARY: The Environmental Protection Agency (EPA) is publishing this final rule to postpone the compliance deadlines for implementation of Phase 2 of the National Pollutant Discharge Elimination System (NPDES) Electronic Reporting Rule (''NPDES eRule''). The NPDES eRule requires EPA and states to modernize Clean Water Act (CWA) reporting. This final rule also provides states with additional flexibility to request additional time as needed. Further, this final rule promulgates clarifying changes to the NPDES eRule and eliminates some duplicative or outdated reporting requirements. Taken together, these changes are designed to save the NPDES authorized programs considerable resources, make reporting easier for NPDES-regulated entities, streamline permit renewals, ensure full exchange of NPDES program data between states and EPA, enhance public transparency, improve environmental decision-making, and protect human health and the environment.

DATES: The final rule is effective on January 4, 2021. In accordance with 40 CFR part 23, this regulation shall be considered issued for purposes of judicial review at 1 p.m. Eastern time on November 16, 2020. The start dates for electronic reporting are provided in 40 CFR 127.16.

ADDRESSES: EPA has established a docket for this action under Docket ID No. EPA–HQ–OECA–2019–0408. All documents in the docket are listed on the *www.regulations.gov* website. Although listed in the index, some information is not publicly available, *e.g.,* confidential business information or other information whose disclosure is restricted by statute. Certain other material, such as copyrighted material, is not placed on the internet and will be publicly available only in hard copy form. Out of an abundance of caution for members of the public and our staff, the EPA Docket Center and Reading Room was closed to public visitors on March 31, 2020, to reduce the risk of transmitting COVID–19. Our Docket Center staff will continue to provide remote customer service via email, phone, and webform. For further information on EPA Docket Center services and the current status, please visit us online at *https://www.epa.gov/dockets.* The telephone number for the Public Reading Room is (202) 566–1744.

FOR FURTHER INFORMATION CONTACT: For additional information, please contact Mr. Carey A. Johnston, Office of Compliance (mail code 2222A), Environmental Protection Agency, 1200 Pennsylvania Avenue NW, Washington, DC 20460; telephone number: 202–566–1014; or email: *johnston.carey@epa.gov* (preferred). Also see the following website for additional information regarding the rulemaking: *https://www.epa.gov/compliance/npdes-ereporting.*

SUPPLEMENTARY INFORMATION:

How is this document organized?

The outline of this document follows the following format:

I. General Information
II. Background
III. Postponement of Phase 2 Compliance Deadlines
IV. Alternative Phase 2 Compliance Deadlines
V. Clarifying Edits for More Efficient Implementation and 2019 NPDES Updates Rule Changes
VI. Assistance To States to Implement Phase 2
VII. Statutory and Executive Order Reviews

I. General Information

A. Does this action apply to me?

Entities potentially affected by this action include all NPDES-permitted facilities, whether covered by an individual permit or general permit, industrial users located in cities without approved local pretreatment programs, facilities subject to EPA's biosolids regulations, and governmental entities that have received NPDES program authorization or are implementing portions of the NPDES program in a cooperative agreement with EPA. These entities include:

Category	Examples of regulated entities
Facilities seeking coverage under an individual NPDES permits, general permit, or subject to a NPDES inspection.	Publicly-owned treatment works (POTW) facilities, treatment works treating domestic sewage (TWTDS), municipalities, counties, stormwater management districts, state-operated facilities, Federally-operated facilities, industrial facilities, construction sites, and concentrated animal feeding operations (CAFOs).
Industrial users located in cities without approved local pretreatment programs.	Industrial facilities discharging to POTWs and for which the designated pretreatment Control Authority is EPA or the authorized state, tribe, or territory rather than an approved local pretreatment program.
POTWs and other facilities subject to EPA's biosolids regulations.	Class I sludge management facilities (as defined in 40 CFR 503.9(c)), POTWs with a design flow rate equal to or greater than one million gallons per day, and POTWs that serve 10,000 people or more.
State and territorial governments ...	States and territories that have received NPDES program authorization from EPA, that are implementing portions of the NPDES program in a cooperative agreement with EPA, or that operate NPDES-permitted facilities.
Tribal governments	Tribes that have received NPDES program authorization from EPA, that are implementing portions of the NPDES program in a cooperative agreement with EPA, or that operate NPDES-permitted facilities.
Federal government	Federal facilities with a NPDES permit and EPA Regional Offices acting for those states, tribes, and territories that do not have NPDES program authorization or that do not have program authorization for a particular NPDES subprogram (*e.g.,* biosolids or pretreatment).

This table is not intended to be an exhaustive list, but rather provides some examples of the types of entities potentially regulated by this action. Other types of entities not listed in this table may also be regulated. If you have questions regarding the applicability of this final action to a particular entity, consult the person listed in the **FOR FURTHER INFORMATION CONTACT** section.

B. What action is the agency taking?

EPA published the National Pollutant Discharge Elimination System (NPDES) Electronic Reporting Rule (''NPDES eRule'') on October 22, 2015. The 2015 rule required EPA and states to

modernize Clean Water Act (CWA) reporting for municipalities, industries and other facilities. The rule divided implementation into two ''Phases.'' The deadline for Phase 1 implementation passed on December 21, 2016. The deadline for Phase 2 was initially scheduled for December 21, 2020. Some state authorized NPDES programs provided feedback to EPA on how to improve Phase 2 implementation of the NPDES eRule and, in particular, have recommended changes to the schedule for Phase 2 implementation to allow both EPA and states sufficient time to develop and implement the information technology solutions necessary for electronic reporting of the Phase 2 data (see DCN 0001 to 0009). EPA published a proposed rule to solicit comment on postponing the compliance deadlines for Phase 2 implementation as well as other changes to the NPDES eRule to allow for a smoother transition from paper to electronic reporting for the NPDES program (see February 28, 2020; 85 FR 11909). EPA received comments from seven states, one state association, and one anonymous commenter. The final rule addresses these comments and postpones the compliance deadlines for Phase 2 implementation of the NPDES eRule. This final rule also provides states with additional flexibility to request additional time as needed. Further, this final rule promulgates clarifying changes to the NPDES eRule and eliminates some duplicative or outdated reporting requirements.

C. What is the agency's authority for taking this action?

Pursuant to the Clean Water Act (CWA), 33 U.S.C. 1251 *et seq.,* EPA promulgated the NPDES eRule, which added a new part to title 40 (40 CFR part 127) and made changes to existing NPDES regulations. The EPA promulgated the NPDES eRule under authority of the CWA sections 101(f), 304(i), 308, 402, and 501. EPA is using the same authority to finalize changes to the NPDES eRule. EPA notes that the Congressional Declaration of Goals and Policy of the CWA specifies in section 101(f) that ''It is the national policy that to the maximum extent possible the procedures utilized for implementing this chapter shall encourage the drastic minimization of paperwork and interagency decision procedures, and the best use of available manpower and funds, so as to prevent needless duplication and unnecessary delays at all levels of government.''

Harnessing information technology that is now a common part of daily life is an important step toward reaching the goals of the CWA. EPA is promulgating this rule under the authority of CWA section 304(i), which authorizes EPA to establish minimum procedural and other elements of state programs under section 402, including reporting requirements and procedures to make information available to the public. In addition, EPA is promulgating this rule under section 308 of the CWA. Section 308 of the CWA authorizes EPA to require access to information necessary to carry out the objectives of the Act, including sections 301, 305, 306, 307, 311, 402, 404, 405, and 504. Section 402 of the CWA establishes the NPDES permit program for the control of the discharge of pollutants into the nation's waters. Specifically, CWA sections 402(b) and (c) require each authorized state, tribe, or territory to ensure that permits meet certain substantive requirements, and provide EPA information from point sources, industrial users, and authorized programs in order to ensure proper oversight. Finally, EPA is promulgating this rule under the authority of section 501, which authorizes EPA to prescribe such regulations as are necessary to carry out provisions of the Act.

D. What are the incremental costs and benefits of this action?

EPA identified only minimal incremental costs of this final rule as the overall impact of these changes allow states to more efficiently implement the NPDES eRule. EPA is postponing the compliance deadlines for Phase 2 implementation by five years and providing states with additional flexibility to request an extension if more time is necessary but with no extension allowed beyond December 21, 2028 (see Section IV of this preamble).

This rule also finalizes changes to the NPDES eRule that clarify existing requirements and eliminate some duplicative or outdated reporting requirements. For example, this rule eliminates three data elements from the minimum set of NPDES program data (Appendix A to 40 CFR part 127): Reportable Noncompliance Tracking, Reportable Noncompliance Tracking Start Date, and Applicable Categorical Standards. These changes will reduce the costs to authorized NPDES programs in collecting, managing, and sharing these data. EPA also anticipates that the clarifications contained in this final rule will help states avoid unnecessary implementation costs. For example, the final rule makes clear that the electronic reporting requirement for Notices of Termination (NOTs) applies only to general permit covered facilities (see Table 1 to Appendix A, 40 CFR part 127) and not to individually permitted facilities.

II. Background

EPA published the NPDES eRule on 22 October 2015. The 2015 rule required EPA and states to modernize Clean Water Act (CWA) reporting for municipalities, industries and other facilities. The rule replaced most paper-based NPDES reporting requirements with electronic reporting. The rule converted the following paper reports to electronic: (1) Discharge Monitoring Reports (DMRs); (2) general permit reports (*e.g.,* Notices of Intent to discharge in compliance with a general permit); and (3) other specified program reports. The NPDES eRule included a phased implementation schedule (40 CFR 127.26). Most states and permittees have successfully implemented Phase 1 of the NPDES eRule, which includes electronic submission of DMRs and the Federal Biosolids Annual Report where EPA is the Regulatory Authority.

The NPDES eRule requires EPA to calculate electronic reporting participation rates for each authorized NPDES program six months after the deadline for conversion from paper to electronic submissions and annually thereafter [see 40 CFR 127.26(j)]. The compliance deadlines for Phase 1 of the NPDES eRule were 21 December 2016 and included NPDES Data Groups No. 3 (Discharge Monitoring Reports or ''DMRs'') and No. 4 [Sewage Sludge/Biosolids Annual Program Reports, where EPA implements the biosolids program (40 CFR part 503)]. EPA's first three assessments have shown considerable progress in Phase 1 implementation (see DCN 0012—0014), although more work needs to be done to achieve the full benefits of Phase 1. Current tracking of Phase 1 implementation is available through the ''NPDES eRule Readiness Dashboard.'' See: *https://echo.epa.gov/trends/npdes-erule-dashboard-public.* EPA recognizes that there are a number of states who have not fully implemented Phase 1. Given that EPA is today postponing the Phase 2 deadlines, EPA is committed to focusing additional attention to ensure that it is receiving all Phase 1 data. There are a number of mechanisms that EPA can use to ensure it receives all Phase 1 data. EPA has been working with states, providing in-kind technical assistance and Exchange Network grant funding (see *https://www.epa.gov/exchangenetwork/exchange-network-grant-program*). In addition, EPA could use the initial recipient procedure to expedite the conversion to electronic reporting for DMRs (see 40 CFR 127.27). The initial recipient procedure allows

EPA to direct NPDES permittees to use EPA's electronic reporting tools for one or more NPDES data groups if the authorized NPDES program cannot fully meet the requirements to be an initial recipient.

Electronic submission of all other reports and notices covered by the NPDES eRule are part of Phase 2 implementation. See Table 1 to 40 CFR 127.16. The online ''NPDES eRule Phase 2 Implementation Dashboard'' provides an inventory of all general permits and program reports covered by the NPDES eRule. See: *https://edap.epa.gov/public/extensions/eRule_Phase2/eRule_Phase2.html.* This dashboard also provides an updated view of EPA's progress in gathering information and deploying NPDES electronic reporting tools for Phase 2 general permits and program reports (see DCN 0015).

EPA and states are now focusing on implementing Phase 2 of the NPDES eRule and continuing their work on implementing Phase 1. EPA and states are now gathering information and deploying NPDES electronic reporting tools for Phase 2 reports. EPA and states are collaborating and sharing information through multiple workgroups. EPA used these workgroups to provide states with more information on Phase 2 implementation. See: *https://www.epa.gov/compliance/data-entry-guidance-and-technical-papers.* The EPA-state General Permit and Program Report Technical Workgroup meets monthly and focuses on the EPA Regional and state general permits and program reports that will use EPA's NPDES Electronic Reporting Tool (NeT) for Phase 2 data. The EPA-state NPDES Noncompliance Report (NNCR) workgroup is discussing how to identify, categorize, sort, and display violations on the NNCR. This workgroup is discussing how best to implement the new NNCR regulations in 40 CFR 123.45.

EPA received letters from authorized NPDES programs on how to improve Phase 2 implementation of the NPDES eRule. The letters recommended changes to the schedule for Phase 2 implementation to allow both EPA and states sufficient time to develop and implement the information technology solutions necessary for electronic reporting of the Phase 2 data (see DCN 0001 to 0009).

In response to the feedback from the states in the letters and oral communications, EPA proposed changes to the NPDES eRule to allow for a smoother transition from paper to electronic reporting for the NPDES program (see February 28, 2020; 85 FR 11909). EPA received comments on the proposal from seven states, one state association, and one anonymous commenter. The final rule addresses these comments and postpones the compliance deadlines for Phase 2 implementation period of the NPDES eRule. This final rule also provides states with additional flexibility to request additional time as needed. Further, this final rule promulgates clarifying changes to the NPDES eRule and eliminates some duplicative or outdated reporting requirements.

Finally, in a separate rulemaking, EPA has finalized updates to the minimum set of NPDES program data (Appendix A to 40 CFR part 127) for the municipal separate storm sewer systems (MS4s) sector. See April 15, 2020; 85 FR 20873. These changes to the NPDES eRule correct obsolete citations and previous inconsistencies with the newly modified MS4 Phase II regulations. See December 8, 2016; 81 FR 89320. These updates do not change the burden associated with complying with the NPDES eRule but, rather, these changes assist permitting authorities and MS4 permittees in implementing NPDES electronic reporting.

III. Postponement of Phase 2 Compliance Deadlines

A. Phase 2 Implementation Deadline

This final rule postpones the compliance deadlines for Phase 2 implementation of the NPDES eRule from December 21, 2020, to December 21, 2025 (see Table 1 to 40 CFR 127.16). EPA received comments from seven authorized NPDES programs and one state association on how to improve Phase 2 implementation of the NPDES eRule (see Document Nos: EPA–HQ–OECA–2019–0408–0022 through 0029; available at *https://www.regulations.gov*).

The comments were generally supportive of the proposed rule and requested more time for Phase 2 implementation than the three-year extension in the proposed rule. The Association of Clean Water Administrators (ACWA) and other states requested that, ''EPA should invest the necessary resources to complete the ICIS–NPDES updates and to meet all NeT/NetDMR commitment obligations to allow states and EPA to meet the new deadlines . . . States are also very interested in engaging with EPA to identify and prioritize important areas for updating/enhancing ICIS–NPDES.'' ACWA and other states noted their appreciation for EPA's financial support through the Exchange Network Grant Program. They also requested that EPA make additional dedicated grant funding available to States for NPDES eRule implementation. ACWA also expressed appreciation for the continuing opportunities to participate on workgroups associated with NPDES eRule implementation.

ACWA and state commenters recommended that EPA extend the Phase 2 compliance deadlines for Phase 2 implementation by five years instead of the proposed three years. ACWA noted that it does not believe that three years will be adequate time to complete all the necessary work, especially with the current COVID–19 crisis undermining the efficiency of some of this work over the next six to twelve months. Iowa noted that the postponement of the compliance deadline will allow states and tribes to explore more cost-effective options for electronic reporting. ACWA also suggested an alternative proposal that would set the Phase 2 compliance deadline to be three years after EPA completes the necessary upgrades to its national NPDES data system to enable receipt of Phase 2 data.

The final rule provides EPA and states with five additional years to implement Phase 2. This timeframe responds to state comments for more time and addresses concerns about the potential delays due to the COVID–19 pandemic response. In addition, extending the Phase 2 compliance deadline by two additional years will provide EPA and authorized NPDES programs with additional time to complete the development of electronic tools. Maintaining a fixed date rather than tying the deadline to completion of certain electronic reporting solutions can help prioritize resources and focus attention on the tasks necessary for the conversion to electronic reporting.

In addition to postponing the Phase 2 compliance deadlines to December 21, 2025, EPA is adding a reference to the alternative Phase 2 compliance deadlines provisions at 40 CFR 127.24(e) or (f). This is discussed in more detail below. Other than the changes to the Phase 2 compliance deadlines and the addition of the reference to the alternative Phase 2 compliance deadlines provisions, EPA is not making any other changes to the requirements in these sections.

B. Deadline for Public Release of NNCR

EPA proposed to delay the public release date of the NNCR by one year, to December 21, 2022. EPA noted in the preamble to the proposed rule that this date will allow EPA and states to use the new NNCR as EPA is making decisions on its next round of National Compliance Initiatives. See: *https://*

www.epa.gov/enforcement/national-compliance-initiatives. EPA further explained that it would only be able to provide Phase 1 data in the NNCR initially and would need to modify the NNCR as Phase 2 data becomes available.

ACWA on behalf of several states recommended that public release of the NNCR (both Phase 1 and Phase 2) be delayed until known data quality issues are resolved.

In response, EPA has added regulatory language that explicitly creates separate deadlines for the public release of the NNCR using Phase 1 data (December 2022) and Phase 2 data (one year after the draft report is made available to states but no later than December 2026). The NNCR public release dates for Phase 2 data would be phased in over time to give states at least one year to review and provide comments on draft versions of the NNCR that incorporates Phase 2 data before EPA releases a new version to the public. EPA will provide states with an informal notice whenever a new draft version of the NNCR using Phase 2 data is ready for their review and comment. This will help EPA and states identify and fix data quality and data sharing issues. The deadline for issuance of the version of the NNCR that incorporates all Phase 2 data will be December 2026, *i.e.,* one year after revised deadline for implementation of Phase 2 (similar to the approach in the 2015 NPDES eRule).

Phase 1 data are already provided to the public through ECHO, so even if data quality issues exist, the public already has access to Phase 1 data, which includes noncompliance data. EPA does not think it is necessary to delay public release of the NNCR for Phase 1 beyond December 2022. As previously noted, EPA and states have made significant progress in implementing Phase 1 and EPA has held frequent meetings with states on how to develop the NNCR and improve data sharing between EPA and authorized NPDES programs. EPA will continue to help states improve their compliance with the data sharing requirements in the NPDES eRule for Phase 1 data. In particular, EPA has provided technical support to authorized states to resolve data sharing problems and has developed a series of online dashboards to identify missing or inaccurate Phase 1 data and track improvements in Phase 1 data sharing. The benefit of this approach will be to give EPA, states, and the public a complete inventory of facilities with violations based on the most currently available set of NPDES program data. This will help EPA and states identify noncompliance issues that might impact human health or the environment.

IV. Alternative Phase 2 Compliance Deadlines

In addition to postponing the Phase 2 compliance deadlines, EPA is adding two regulatory provisions that create additional flexibility for Phase 2 compliance. These two new provisions respond to the requests from ACWA and from authorized NPDES programs for more time to develop and implement the information technology solutions necessary for electronic reporting of the Phase 2 data.

The first regulatory provision [40 CFR 127.24(e)] allows authorized NPDES programs to request additional time beyond December 21, 2025 to implement Phase 2 of the NPDES eRule. Under this provision, an authorized NPDES program must send a request to EPA for review and approval. This request must identify the facilities, general permits, program reports, or data elements for which the authorized NPDES program needs additional time beyond December 21, 2025. For example, a state may seek approval from EPA to postpone implementation of electronic reporting for a NPDES general permit until an agreed-upon time after December 21, 2025, but no later than December 21, 2028. EPA estimates that no authorized state will need more time than that fixed date, which is thirteen years after the effective date of the 2015 NPDES eRule. This waiver might be helpful if a state has a permit or program report that is a lower priority for electronic reporting (*e.g.,* a general permit that provides coverage for 10 or fewer NPDES-regulated entities) and for which electronic reporting tool development is delayed.

While states may make multiple requests for compliance deadline extensions beyond December 21, 2025, EPA will not grant extensions beyond December 21, 2028. Under today's rule, each alternative Phase 2 compliance deadline request must:

- Be submitted to EPA by the Director, as defined in 40 CFR 122.2;
- Identify each general permit, program report, and related data elements covered by the request and the corresponding alternative compliance deadline(s);
- Identify each facility covered by the request and the corresponding alternative compliance deadline(s) (Note: This only applies if the request covers some but not all facilities covered by the relevant general permit or program report requirement);
- Be submitted at least 120 days prior to the then-applicable compliance deadline(s) in Table 1 to 40 CFR 127.16 or a previously EPA approved alternative compliance deadline; and
- Provide a rationale for the delay and enough details (*e.g.,* tasks, milestones, roles and responsibilities, necessary resources) to clearly describe how the program will successfully implement electronic reporting for the general permit, program report, and related data elements covered by the request.

EPA will review each alternative Phase 2 compliance deadline request to determine if it provides enough detail to accurately assess if the state has a reasonable plan to deploy electronic reporting by the requested alternative Phase 2 compliance deadline. EPA will return alternative Phase 2 compliance deadline requests with insufficient detail back to the Director within 30 days of receipt and provide recommendations. EPA intends to approve or deny each complete alternative Phase 2 compliance deadline request within 120 days of receipt of a sufficiently detailed request. EPA will provide notice to the authorized NPDES program of EPA's approval or denial. The authorized NPDES program may re-apply if the initial request is denied by EPA.

EPA may elect to deny an alternative Phase 2 compliance deadline request and then continue to follow the procedure in the existing rule for determining the initial recipient of electronic NPDES information (see 40 CFR 127.27). EPA must become the initial recipient of electronic NPDES information from NPDES-regulated facilities if the state, tribe, or territory does not consistently maintain electronic data transfers in compliance with the NPDES eRule [see 40 CFR 127.27(d)(2)]. EPA will update its website with each alternative Phase 2 compliance deadline request and the corresponding Agency approval or denial notice. EPA will provide updated information at: *https://www.epa.gov/compliance/npdes-ereporting.* EPA will also update its website and online ''NPDES eRule Phase 2 Implementation Dashboard'' to clearly identify the approved alternative Phase 2 compliance deadlines for each facility, general permit report, program report, and related data elements by authorized NPDES program.

The second regulatory provision [40 CFR 127.24(f)] authorizes EPA to, on its own initiative, allow for additional time for one or more authorized NPDES programs (states and EPA Regions) to implement NPDES electronic reporting beyond December 21, 2025. Under this provision, EPA may establish an

alternative Phase 2 compliance deadline for electronic reporting and data sharing for one or more facilities, general permit reports, program reports, and related data elements (see Table 2 to Appendix A to 40 CFR part 127). Use of this provision may be necessary if EPA has not yet deployed the required electronic reporting tool (when EPA is responsible for building the tool) or if EPA has not yet deployed the protocols and systems for authorized NPDES programs to share one or more data elements with EPA (when the state is responsible for building the tool or generating the data). Under the provision, EPA may set an alternative Phase 2 compliance deadline for up to three years but not beyond December 21, 2028. EPA will update its website and online ''NPDES eRule Phase 2 Implementation Dashboard'' to clearly identify the alternative Phase 2 compliance deadlines for each facility, general permit report, program report, and related data elements by authorized NPDES program.

Separately, EPA will provide notice to the one or more authorized NPDES programs covered by each alternative Phase 2 compliance deadline through an email or letter. This EPA notice will detail how EPA will implement electronic reporting (when EPA is responsible for deploying one or more electronic reporting tools) or how EPA will receive data from authorized NPDES programs (when the state is responsible for deploying one or more electronic reporting tools). This section of the rule does not change the process for designating the initial recipient of electronic NPDES information from NPDES-regulated facilities (see 40 CFR 127.27). This additional flexibility will also allow more time for EPA and authorized NPDES programs to resolve any issues related to the sharing of Phase 2 data.

ACWA and most states requested that EPA remove the prohibition against further extensions beyond the fixed 3-year date. States cited the uncertainties ahead with the COVID–19 pandemic response, as well as concerns that there could be further slippage in EPA's schedule for updating the ICIS–NPDES data system and developing data collection tools under EPA's NPDES electronic reporting Tool (''NeT''), whether related to the pandemic or for other reasons.

The final rule retains the proposed option for a fixed date that is three years beyond the revised Phase 2 Compliance Deadlines. This means that EPA can approve extensions up to, but not beyond, December 21, 2028. As previously noted, EPA estimates that no authorized state will need more time than that fixed date, which is thirteen years after the effective date of the 2015 NPDES eRule. This approach will help focus EPA and state efforts on NPDES electronic reporting and help expedite the benefits of electronic reporting to NPDES-regulated entities.

Finally, the Iowa Department of Natural Resources (Iowa DNR) commented that the language of the proposed 40 CFR 127.24(f) could be read to authorize EPA to delay electronic reporting and establish an implementation schedule for a state without that state's consent. Iowa recommended in a meeting with EPA that EPA modify the language to make clear that EPA cannot dictate to states how electronic reporting will be implemented if the state is meeting the implementation schedule in the rule (see Table 1, 40 CFR 127.16, and 40 CFR 127.23). See DCN 0027. In response, EPA clarifies that this new provision does not alter the approach taken in the 2015 NPDES eRule that gives states the option to build and deploy one or more electronic reporting tools. EPA does not dictate to states how electronic reporting will be implemented if the state is meeting its obligations under the rule (*e.g.,* implementation schedule, data collection and sharing requirements) and complying with EPA's Cross-media Electronic Reporting Rule (40 CFR part 3). EPA modified the language in 40 CFR 127.24(f) to make clear that this provision does not make any changes to the initial recipient designation process, which is documented at 40 CFR 127.27.

V. Clarifying Edits for More Efficient Implementation and 2019 NPDES Updates Rule Changes

EPA solicited comment on several clarifying edits to the 2015 NPDES eRule (see February 28, 2020; 85 FR 11913). These proposed changes are intended to clarify and streamline NPDES eRule implementation. EPA received two comments on these changes.

ACWA noted its support for the ''minor refinements to the NPDES eReporting Rule to reflect lessons learned over the last five years, to streamline NPDES eRule implementation, and to clarify several Appendix A data elements/descriptions, which include a number of suggestions provided directly by states.'' ACWA also stated that it, ''does not currently have any further specific recommendations for these provisions/sections but expects individual states may provide such. Where appropriate, ACWA can help EPA identify whether such recommendations are supported by a majority of the states.'' EPA thanks ACWA for the comment and its offer of help in implementing NPDES electronic reporting.

An anonymous commenter noted that, ''The proposed rule asks for both the SIC code and NAICS code to be submitted. Requiring both seems like an undue burden on the regulated community, given the regulatory benefit. Since SIC codes are outdated, only NAICS codes should be required and SIC codes should be optional.'' EPA notes that the comment on the collection of SIC code data as an ''undue burden on the regulated community'' is outside the scope of this rulemaking as the data sharing requirements in this final rule are imposed on the authorized NPDES programs and not on the regulated community. EPA established the data sharing requirements on the regulated community in the 2019 NPDES Applications and Program Updates Final Rule (see 12 February 2019; 84 FR 3324). Authorized NPDES programs must update their NPDES permit applications to collect four-digit Standard Industrial Classification (SIC) codes and the six-digit NAICS codes (see 84 FR 3327).

EPA used the NPDES Electronic Reporting Rule—Phase 2 Extension proposed rule to solicit comment on updates to the minimum set of NPDES data that authorized NPDES program must share with EPA (see 28 February 2020; 85 FR 11923). EPA proposed that states share these data for both individual and general permit covered facilities. This would ensure that there is consistent and complete reporting nationwide of industrial classification data, which are useful for regulatory decisions and program oversight. EPA proposed to require states to share these NAICS code data with EPA when they approve NPDES permit coverage as this will help lower the implementation costs to states. Additionally, EPA does not see the continued sharing of these SIC code data with EPA as undue burden on states. EPA did not receive any negative comments regarding the burden of these revised data sharing requirements on authorized NPDES programs.

Additionally, for reason set forth in the proposed rule and in this preamble to the final rule, EPA is amending the NPDES eRule to incorporate clarifying changes. The changes adopted in the final rule:

- Correct the title for 40 CFR 123.45
- Provide greater clarity and specificity for the NNCR Category I noncompliance definitions
- Correct Appendix A deficiency descriptions

- Correct data element name, description, and reference for Biosolids or Sewage Sludge—Land Application or Surface Disposal Deficiencies
- Correct the title of the ''Sewer Overflow/Bypass Event Report''
- Delete the following two data elements: Reportable Noncompliance Tracking and Reportable Noncompliance Tracking Start Date
- Provide greater clarity for the ''Facility Concentrated Aquatic Animal Production (CAAP) Status'' data element name and description
- Provide greater clarity on the 'Permit Component' data element with respect to unpermitted facilities
- Provide greater clarity on the Notice of Termination (NOT) electronic reporting requirements
- Provide greater clarity on the ''Applicable Effluent Limitations Guidelines'' data element and delete the duplicative data element, ''Applicable Categorical Standards''
- Provide greater clarity on the ''Receiving Waterbody Name for Permitted Feature'' data element name and description
- Require NAICS Code Data to match the 2019 NPDES Applications and Program Updates Final Rule
- Add Variance Data Elements to Appendix A to match the 2019 NPDES Applications and Program Updates Final Rule
- Make two editorial changes to the NNCR language as noted below

Specifically, Arkansas provided suggestions in comments on the proposed rule to clarify the noncompliance reporting language at Appendix A, 40 CFR 123.45 (see EPA–HQ–OECA–2019–0408–0027). These comments noted that the criteria for monthly average permit limit violations for determining Category I noncompliance should be clarified as lower thresholds. These comments suggested the following clarifying changes to Appendix A, 40 CFR 123.45 (underlined text below are the suggested additions).

- Violations of monthly average permit effluent limits which exceed or equal the product of the Technical Review Criteria (TRC) times the permit effluent limit and occur *in any* two *or more* months in a six-month period.
- Violations of monthly average permit effluent limits which are exceeded in any four *or more* months in a six-month period.

EPA incorporated these changes into Appendix A, 40 CFR 123.45, as they provide greater clarity on how these criteria currently work as lower thresholds for triggering Category I noncompliance and represent the Agency's long-standing interpretation and implementation of these criteria (see Enforcement Management System: National Pollutant Discharge Elimination System (Clean Water Act), Chapter VII, DCN 0028).

VI. Assistance to States To Implement Phase 2

EPA will continue to provide technical assistance and support to authorized NPDES programs during the transition to electronic reporting. This includes building electronic reporting tools for authorized NPDES programs that elect to use these tools and to support the development of new data transfer protocols. EPA will also provide states with the data sharing protocols for Phase 2 data prior to December 21, 2025. EPA will give states enough guidance and training ahead of this deadline so that states have an orderly means to share these data with EPA. Authorized NPDES programs can request EPA's assistance for electronic reporting by submitting a request to *NPDESeReporting@epa.gov.*

EPA offers authorized programs financial assistance through the Exchange Network Grant Program. This program provides funding to states, territories, and federally recognized Indian tribes to support the development of the National Environmental Information Exchange Network. The primary outcome expected from Exchange Network assistance agreements is improved access to, and exchange of, high-quality environmental data from public and private sector sources. More information on this program is available at: *https://www.epa.gov/exchangenetwork/exchange-network-grant-program.*

EPA will continue to work with authorized NPDES programs to implement NPDES electronic reporting. This includes the use of workgroups to help authorized NPDES programs share data with EPA and to provide recommendations on how EPA should build the NNCR. Authorized NPDES programs can contact the person listed in the **FOR FURTHER INFORMATION CONTACT** section to learn how to join these workgroups.

VII. Statutory and Executive Order Reviews

A. Executive Order 12866: Regulatory Planning and Review and Executive Order 13563: Improving Regulation and Regulatory Review

This action is not a significant regulatory action and was therefore not submitted to the Office of Management and Budget (OMB) for review.

B. Executive Order 13771: Reducing Regulations and Controlling Regulatory Costs

This action is not an Executive Order 13771 regulatory action because this action is not significant under Executive Order 12866.

C. Paperwork Reduction Act

The information collection activities in this rule have been submitted for approval to the Office of Management and Budget (OMB) under the PRA. The Information Collection Request (ICR) document that the EPA prepared has been assigned EPA ICR number 2617.02. You can find a copy of the ICR in the docket for this rule, and it is briefly summarized here. The information collection requirements are not enforceable until OMB approves them.

EPA has primary responsibility for ensuring the CWA's NPDES program is effectively and consistently implemented nationwide, thus ensuring that public health and environmental protection goals of the CWA are met. EPA is taking this action pursuant to CWA sections 101(f), 304(i), 308, 402, and 501. The accurate, complete, and timely information collected under this ICR will help EPA and states more efficiently implement the 2015 NPDES eRule. The improved information sharing would increase transparency and accountability and help EPA and authorized NPDES programs collaborate and measure progress in implementing the 2015 NPDES eRule. This information collection would provide EPA with more timely, consistent, and accurate inventory of all general permits and program reports, the number of facilities that must electronically submit reports, and the online location of state electronic reporting tools [see 40 CFR 123.43(d)].

Receiving current high-level data on general permits and program reports is critical to EPA's ability to oversee and manage authorized NPDES programs. Authorizing the burden under this ICR will allow EPA to provide timely assistance to authorized NPDES programs as they implement the NPDES eRule. The general permits and program reports inventory will help promote

efficiencies in NPDES eRule implementation as states will be able to use this information to identify other states that have already developed electronic reporting tools and may be able to provide helpful information or advice.

Respondents/affected entities: This ICR covers the 47 states and one U.S. Territory authorized to implement the NPDES program.

Respondent's obligation to respond: Mandatory (40 CFR 123.43(d) and 127.24(e)).

Estimated number of respondents: 48.

Frequency of response: EPA estimates that twelve authorized NPDES programs will provide updated information on general permits and program reports and the related electronic reporting tools each month. Additionally, all 48 authorized NPDES programs will conduct an annual review and update of EPA's inventory. Finally, EPA estimates that approximately 15 authorized NPDES programs will prepare and submit an alternative Phase 2 compliance deadline request during the three-year period covered by the ICR.

Total estimated burden: 416 hours (per year). Burden is defined at 5 CFR 1320.3(b).

Total estimated cost: $25,418 (per year), includes $0 annualized capital or operation & maintenance costs.

An agency may not conduct or sponsor, and a person is not required to respond to, a collection of information unless it displays a currently valid OMB control number. The OMB control numbers for the EPA's regulations in 40 CFR are listed in 40 CFR part 9. In addition, the EPA is amending the table in 40 CFR part 9 to list the regulatory citations for the information collection activities contained in this final rule.

D. Regulatory Flexibility Act (RFA)

I certify that this action will not have a significant economic impact on a substantial number of small entities under the RFA. This action will not impose any requirements on small entities. This action does not affect small entities as the changes in this action only directly covers states, tribes, and territories that have NPDES program authorization. The RFA defines ''small governmental jurisdiction'' as the government of a city, county, town, township, village, school district, or special district with a population of less than 50,000 (5 U.S.C. 601(5)). For the purposes of the RFA, States and tribal governments are not considered small governments. The final rule indirectly affects NPDES permittees as it postpones the compliance dates for Phase 2 implementation. Any costs associated with this postponement are expected to be minimal for each regulatory entity.

E. Unfunded Mandates Reform Act (UMRA)

This action does not contain an unfunded mandate of $100 million or more as described in UMRA, 2 U.S.C. 1531–1538, and does not significantly or uniquely affect small governments. The changes in this action help streamline the implementation of the NPDES eRule and provide states with more flexibility. EPA estimates that the additional time and flexibility afforded by the changes will help lower the implementation costs.

F. Executive Order 13132: Federalism

This action does not have federalism implications. It will not have substantial direct effects on the states, on the relationship between the national government and the states, or on the distribution of power and responsibilities among the various levels of government.

G. Executive Order 13175: Consultation and Coordination With Indian Tribal Governments

This action does not have tribal implications as specified in Executive Order 13175. This action does not affect small entities as the changes in this action only cover states, tribes, and territories that have NPDES program authorization. Currently there are no tribal governments that are authorized for the NPDES program. Thus, Executive Order 13175 does not apply to this action.

H. Executive Order 13045: Protection of Children From Environmental Health Risks and Safety Risks

This action is not subject to Executive Order 13045 because it is not economically significant as defined in Executive Order 12866, and because the EPA does not believe the environmental health or safety risks addressed by this action present a disproportionate risk to children. The changes in this action only cover states, tribes, and territories that have NPDES program authorization.

I. Executive Order 13211: Actions Concerning Regulations That Significantly Affect Energy Supply, Distribution or Use

This action is not subject to Executive Order 13211, because it is not a significant regulatory action under Executive Order 12866.

J. National Technology Transfer and Advancement Act (NTTAA)

This rulemaking does not involve technical standards.

K. Executive Order 12898: Federal Actions To Address Environmental Justice in Minority Populations and Low-Income Populations

The EPA believes that this action does not have disproportionately high and adverse human health or environmental effects on minority populations, low-income populations and/or indigenous peoples, as specified in Executive Order 12898 (59 FR 7629, February 16, 1994). The changes in this action only cover states, tribes, and territories that have NPDES program authorization.

L. Congressional Review Act (CRA)

This action is subject to the CRA, and the EPA will submit a rule report to each House of the Congress and to the Comptroller General of the United States. This action is not a ''major rule'' as defined by 5 U.S.C. 804(2).

List of Subjects

40 CFR Part 9

Environmental protection, Reporting and recordkeeping requirements.

40 CFR Part 122

Environmental protection, Administrative practice and procedure, Confidential business information, Hazardous substances, Reporting and recordkeeping requirements, Water pollution control.

40 CFR Part 123

Environmental protection, Administrative practice and procedure, Confidential business information, Hazardous substances, Indians-lands, Intergovernmental relations, Penalties, Reporting and recordkeeping requirements, Water pollution control.

40 CFR Part 127

Environmental protection, Administrative practice and procedure, Automatic data processing, Electronic data processing, Hazardous substances, Intergovernmental relations, Reporting and recordkeeping requirements, Sewage disposal, Waste treatment and disposal, Water pollution control.

40 CFR Part 403

Environmental protection, Confidential business information, Reporting and recordkeeping requirements, Waste treatment and disposal, Water pollution control.

40 CFR Part 503

Environmental protection, Reporting and recordkeeping requirements, Sewage disposal.

Andrew Wheeler,

Administrator.

For the reasons set forth in the preamble, EPA amends 40 CFR parts 9, 122, 123, 127, 403, and 503 as follows:

PART 9—OMB APPROVALS UNDER THE PAPERWORK REDUCTION ACT

■ 1. The authority citation for part 9 continues to read as follows:

Authority: 7 U.S.C. 135 *et seq.,* 136–136y; 15 U.S.C. 2001, 2003, 2005, 2006, 2601–2671; 21 U.S.C. 331j, 346a, 31 U.S.C. 9701; 33 U.S.C. 1251 *et seq.,* 1311, 1313d, 1314, 1318, 1321, 1326, 1330, 1342, 1344, 1345 (d) and (e), 1361; E.O. 11735, 38 FR 21243, 3 CFR, 1971–1975 Comp. p. 973; 42 U.S.C. 241, 242b, 243, 246, 300f, 300g, 300g–1, 300g–2, 300g–3, 300g–4, 300g–5, 300g–6, 300j–1, 300j–2, 300j–3, 300j–4, 300j–9, 1857 *et seq.,* 6901–6992k, 7401–7671q, 7542, 9601–9657, 11023, 11048.

■ 2. In § 9.1, add an entry for ''127.24'' in numerical order under the undesignated center heading ''NPDES Electronic Reporting'' to read as follows:

§ 9.1 OMB approvals under the Paperwork Reduction Act.

* * * * *

40 CFR citation	OMB control No.
* * * * *	
NPDES Electronic Reporting	
* * * * *	
127.24	2020–0037
* * * * *	

* * * * *

PART 122—EPA ADMINISTERED PERMIT PROGRAMS: THE NATIONAL POLLUTANT DISCHARGE ELIMINATION SYSTEM

■ 3. The authority citation for part 122 continues to read as follows:

Authority: The Clean Water Act, 33 U.S.C. 1251 *et seq.*

■ 4. In § 122.26, revise paragraphs (b)(15)(i)(C) and (g)(1)(iii) to read as follows:

§ 122.26 Storm water discharges (applicable to State NPDES programs, see § 123.25).

* * * * *

(b) * * *

(15) * * *

(i) * * *

(C) As of December 21, 2025 or an EPA-approved alternative date (*see* 40 CFR 127.24(e) or (f)), all certifications submitted in compliance with paragraphs (b)(15)(i)(A) and (B) of this section must be submitted electronically by the owner or operator to the Director or initial recipient, as defined in 40 CFR 127.2(b), in compliance with this section and 40 CFR part 3 (including, in all cases, subpart D to part 3), § 122.22, and 40 CFR part 127. 40 CFR part 127 is not intended to undo existing requirements for electronic reporting. Prior to this date, and independent of 40 CFR part 127, owners or operators may be required to report electronically if specified by a particular permit or if required to do so by state law.

* * * * *

(g) * * *

(1) * * *

(iii) Submit the signed certification to the NPDES permitting authority once every five years. As of December 21, 2025 or an EPA-approved alternative date (see 40 CFR 127.24(e) or (f)), all certifications submitted in compliance with this section must be submitted electronically by the owner or operator to the Director or initial recipient, as defined in 40 CFR 127.2(b), in compliance with this section and 40 CFR part 3 (including, in all cases, subpart D to part 3), § 122.22, and 40 CFR part 127. 40 CFR part 127 is not intended to undo existing requirements for electronic reporting. Prior to this date, and independent of 40 CFR part 127, owners or operators may be required to report electronically if specified by a particular permit or if required to do so by state law.

* * * * *

■ 5. In § 122.28, revise paragraph (b)(2)(i) to read as follows:

§ 122.28 General permits (applicable to State NPDES programs, see § 123.25).

* * * * *

(b) * * *

(2) * * *

(i) Except as provided in paragraphs (b)(2)(v) and (vi) of this section, dischargers (or treatment works treating domestic sewage) seeking coverage under a general permit shall submit to the Director a notice of intent to be covered by the general permit. A discharger (or treatment works treating domestic sewage) who fails to submit a notice of intent in accordance with the terms of the permit is not authorized to discharge, (or in the case of sludge disposal permit, to engage in a sludge use or disposal practice), under the terms of the general permit unless the general permit, in accordance with paragraph (b)(2)(v), contains a provision that a notice of intent is not required or the Director notifies a discharger (or treatment works treating domestic sewage) that it is covered by a general permit in accordance with paragraph (b)(2)(vi). A complete and timely, notice of intent (NOI), to be covered in accordance with general permit requirements, fulfills the requirements for permit applications for purposes of §§ 122.6, 122.21, and 122.26. As of December 21, 2025 or an EPA-approved alternative date (*see* 40 CFR 127.24(e) or (f)), all notices of intent submitted in compliance with this section must be submitted electronically by the discharger (or treatment works treating domestic sewage) to the Director or initial recipient, as defined in 40 CFR 127.2(b), in compliance with this section and 40 CFR part 3 (including, in all cases, subpart D to part 3), § 122.22, and 40 CFR part 127. 40 CFR part 127 is not intended to undo existing requirements for electronic reporting. Prior to this date, and independent of 40 CFR part 127, discharger (or treatment works treating domestic sewage) may be required to report electronically if specified by a particular permit or if required to do so by state law.

* * * * *

■ 6. In § 122.34, revise paragraph (d)(3) introductory text to read as follows:

§ 122.34 Permit requirements for regulated small MS4 permits.

* * * * *

(d) * * *

(3) *Reporting.* Unless the permittee is relying on another entity to satisfy its NPDES permit obligations under § 122.35(a), the permittee must submit annual reports to the NPDES permitting authority for its first permit term. For subsequent permit terms, the permittee must submit reports in year two and four unless the NPDES permitting authority requires more frequent reports. As of December 21, 2025 or an EPA-approved alternative date (see 40 CFR 127.24(e) or (f)), all reports submitted in compliance with this section must be submitted electronically by the owner, operator, or the duly authorized representative of the small MS4 to the NPDES permitting authority or initial recipient, as defined in 40 CFR 127.2(b), in compliance with this section and 40 CFR part 3 (including, in all cases, subpart D to part 3), § 122.22, and 40 CFR part 127. 40 CFR part 127 is not intended to undo existing requirements for electronic reporting. Prior to this date, and independent of 40

CFR part 127, the owner, operator, or the duly authorized representative of the small MS4 may be required to report electronically if specified by a particular permit or if required to do so by state law. The report must include:

* * * * *

■ 7. In § 122.41, revise paragraphs (l)(6)(i), (l)(7), and (m)(3)(i) and (ii) to read as follows:

§ 122.41 Conditions applicable to all permits (applicable to State programs, see § 123.25).

* * * * *

(l) * * *

(6) * * *

(i) The permittee shall report any noncompliance which may endanger health or the environment. Any information shall be provided orally within 24 hours from the time the permittee becomes aware of the circumstances. A report shall also be provided within 5 days of the time the permittee becomes aware of the circumstances. The report shall contain a description of the noncompliance and its cause; the period of noncompliance, including exact dates and times), and if the noncompliance has not been corrected, the anticipated time it is expected to continue; and steps taken or planned to reduce, eliminate, and prevent reoccurrence of the noncompliance. For noncompliance events related to combined sewer overflows, sanitary sewer overflows, or bypass events, these reports must include the data described above (with the exception of time of discovery) as well as the type of event (combined sewer overflows, sanitary sewer overflows, or bypass events), type of sewer overflow structure (*e.g.,* manhole, combine sewer overflow outfall), discharge volumes untreated by the treatment works treating domestic sewage, types of human health and environmental impacts of the sewer overflow event, and whether the noncompliance was related to wet weather. As of December 21, 2025 or an EPA-approved alternative date (*see* 40 CFR 127.24(e) or (f)), all reports related to combined sewer overflows, sanitary sewer overflows, or bypass events submitted in compliance with this section must be submitted electronically by the permittee to the Director or initial recipient, as defined in 40 CFR 127.2(b), in compliance with this section and 40 CFR part 3 (including, in all cases, subpart D to part 3), § 122.22, and 40 CFR part 127. 40 CFR part 127 is not intended to undo existing requirements for electronic reporting. Prior to this date, and independent of 40 CFR part 127, permittees may be required to electronically submit reports related to combined sewer overflows, sanitary sewer overflows, or bypass events under this section by a particular permit or if required to do so by state law. The Director may also require permittees to electronically submit reports not related to combined sewer overflows, sanitary sewer overflows, or bypass events under this section.

* * * * *

(7) *Other noncompliance.* The permittee shall report all instances of noncompliance not reported under paragraphs (l)(4), (5), and (6) of this section, at the time monitoring reports are submitted. The reports shall contain the information listed in paragraph (l)(6). For noncompliance events related to combined sewer overflows, sanitary sewer overflows, or bypass events, these reports shall contain the information described in paragraph (l)(6) and the applicable required data in appendix A to 40 CFR part 127. As of December 21, 2025 or an EPA-approved alternative date (see 40 CFR 127.24(e) or (f)), all reports related to combined sewer overflows, sanitary sewer overflows, or bypass events submitted in compliance with this section must be submitted electronically by the permittee to the Director or initial recipient, as defined in 40 CFR 127.2(b), in compliance with this section and 40 CFR part 3 (including, in all cases, subpart D to part 3), § 122.22, and 40 CFR part 127. 40 CFR part 127 is not intended to undo existing requirements for electronic reporting. Prior to this date, and independent of 40 CFR part 127, permittees may be required to electronically submit reports related to combined sewer overflows, sanitary sewer overflows, or bypass events under this section by a particular permit or if required to do so by state law. The Director may also require permittees to electronically submit reports not related to combined sewer overflows, sanitary sewer overflows, or bypass events under this section.

* * * * *

(m) * * *

(3) * * *

(i) *Anticipated bypass.* If the permittee knows in advance of the need for a bypass, it shall submit prior notice, if possible, at least ten days before the date of the bypass. As of December 21, 2025 or an EPA-approved alternative date (*see* 40 CFR 127.24(e) or (f)), all notices submitted in compliance with this section must be submitted electronically by the permittee to the Director or initial recipient, as defined in 40 CFR 127.2(b), in compliance with this section and 40 CFR part 3 (including, in all cases, subpart D to part 3), § 122.22, and 40 CFR part 127. 40 CFR part 127 is not intended to undo existing requirements for electronic reporting. Prior to this date, and independent of 40 CFR part 127, permittees may be required to report electronically if specified by a particular permit or if required to do so by state law.

(ii) *Unanticipated bypass.* The permittee shall submit notice of an unanticipated bypass as required in paragraph (l)(6) of this section (24-hour notice). As of December 21, 2025 or an EPA-approved alternative date (see 40 CFR 127.24(e) or (f)), all notices submitted in compliance with this section must be submitted electronically by the permittee to the Director or initial recipient, as defined in 40 CFR 127.2(b), in compliance with this section and 40 CFR part 3 (including, in all cases, subpart D to part 3), § 122.22, and 40 CFR part 127. 40 CFR part 127 is not intended to undo existing requirements for electronic reporting. Prior to this date, and independent of 40 CFR part 127, permittees may be required to report electronically if specified by a particular permit or if required to do so by state law.

* * * * *

■ 8. In § 122.42, revise paragraphs (c) and (e)(4) introductory text to read as follows:

§ 122.42 Additional conditions applicable to specified categories of NPDES permits (applicable to State NPDES programs, see § 123.25).

* * * * *

(c) *Municipal separate storm sewer systems.* The operator of a large or medium municipal separate storm sewer system or a municipal separate storm sewer that has been designated by the Director under § 122.26(a)(1)(v) must submit an annual report by the anniversary of the date of the issuance of the permit for such system. As of December 21, 2025 or an EPA-approved alternative date (see 40 CFR 127.24(e) or (f)), all reports submitted in compliance with this section must be submitted electronically by the owner, operator, or the duly authorized representative of the MS4 to the Director or initial recipient, as defined in 40 CFR 127.2(b), in compliance with this section and 40 CFR part 3 (including, in all cases, subpart D to part 3), § 122.22, and 40 CFR part 127. 40 CFR part 127 is not intended to undo existing requirements for electronic reporting. Prior to this date, and independent of 40 CFR part 127, the owner, operator, or the duly authorized representative of the MS4 may be required to report electronically

if specified by a particular permit or if required to do so by state law. The report shall include:

* * * * *

(e) * * *

(4) *Annual reporting requirements for CAFOs.* The permittee must submit an annual report to the Director. As of December 21, 2025 or an EPA-approved alternative date (see 40 CFR 127.24(e) or (f)), all annual reports submitted in compliance with this section must be submitted electronically by the permittee to the Director or initial recipient, as defined in 40 CFR 127.2(b), in compliance with this section and 40 CFR part 3 (including, in all cases, subpart D to part 3), § 122.22, and 40 CFR part 127. 40 CFR part 127 is not intended to undo existing requirements for electronic reporting. Prior to this date, and independent of 40 CFR part 127, the permittee may be required to report electronically if specified by a particular permit or if required to do so by state law. The annual report must include:

* * * * *

■ 9. In § 122.64, revise paragraph (c) to read as follows:

§ 122.64 Termination of permits (applicable to State programs, see § 123.25).

* * * * *

(c) Permittees that wish to terminate their permit must submit a Notice of Termination (NOT) to their permitting authority. If requesting expedited permit termination procedures, a permittee must certify in the NOT that it is not subject to any pending State or Federal enforcement actions including citizen suits brought under State or Federal law. As of December 21, 2025 or an EPA-approved alternative date (*see* 40 CFR 127.24(e) or (f)), all NOTs submitted by general permit covered facilities in compliance with this section must be submitted electronically by the permittee to the Director or initial recipient, as defined in 40 CFR 127.2(b), in compliance with this section and 40 CFR part 3 (including, in all cases, subpart D), § 122.22, and 40 CFR part 127. 40 CFR part 127 is not intended to undo existing requirements for electronic reporting. Prior to this date, and independent of 40 CFR part 127, the permittee may be required to report electronically if specified by a particular permit or if required to do so by State law.

PART 123—STATE PROGRAM REQUIREMENTS

■ 10. The authority citation for part 123 continues to read as follows:

Authority: Clean Water Act, 33 U.S.C. 1251 *et seq.*

■ 11. In § 123.45, revise the section heading, the introductory text, paragraphs (a)(2)(i) through (iv), and appendix A to § 123.45 to read as follows:

§ 123.45 Noncompliance and program reporting.

As of December 21, 2022, EPA must prepare and publish online public (quarterly and annual) reports using data from Discharge Monitoring Reports [40 CFR 122.41(l)(4)], Biosolids Annual Program Reports [40 CFR part 503] (when the Regional Administrator is the Director), and information that is required to be submitted by the State Director (see Appendix A, 40 CFR part 127). As of December 21, 2026, EPA must prepare and publish online public (quarterly and annual) reports using information that is required to be submitted by NPDES-regulated facilities and the State Director (see Appendix A, 40 CFR part 127). EPA will provide authorized NPDES programs with at least one year to review and provide comments on draft versions of the NNCR prior to their public release.

(a) * * *

(2) * * *

(i) *Enforcement order violations.* These include violations of any requirement or condition in administrative or judicial enforcement orders, other than compliance construction violations and reporting violations.

(ii) *Compliance construction violations.* These include failure to start construction, complete construction, or achieve final compliance within 90 days after the date established in a permit, administrative or judicial order, or regulation.

(iii) *Permit effluent limit violations.* These include violations of permit effluent limits that exceed the ''Criteria for Category I Permit Effluent Limit Violations'' in appendix A to § 123.45.

(iv) *Reporting violations.* These include failure to submit a required report within 30 days after the date established in a permit, administrative or judicial order, or regulation. These reports only include final compliance schedule progress reports, Discharge Monitoring Reports (*see* 40 CFR 122.41(l)(4)(i)), and program reports (*see* 40 CFR 127.2(f)). In addition, these violations also include any failure to comply with the reporting requirements at 40 CFR 122.41(l)(6).

* * * * *

Appendix A to § 123.45—Criteria for Category I Permit Effluent Limit Violations

This appendix describes the criteria for reporting Category I violations of NPDES permit effluent limits in the NPDES noncompliance report (NNCR) as specified under paragraph (a)(2)(iii) of this section. Any violation of a NPDES permit is a violation of the Clean Water Act (CWA) for which the permittee is liable. As specified in paragraph (a)(2) of this section, there are two categories of noncompliance, and the table below indicates the thresholds for violations in Category I. An agency's decision as to what enforcement action, if any, should be taken in such cases, shall be based on an analysis of facts, legal requirements, policy, and guidance.

Violations of Permit Effluent Limits

The categorization of permit effluent limit violations depends upon the magnitude and/or frequency of the violation. Effluent violations shall be evaluated on a parameter-by-parameter and outfall-by-outfall basis. The criteria for Category I permit effluent limit violations apply to all Group I and Group II pollutants and are as follows:

a. Criteria for Category I Violations of Monthly Average Permit Effluent Limits—Magnitude and Frequency

Violations of monthly average permit effluent limits which exceed or equal the product of the Technical Review Criteria (TRC) times the permit effluent limit and occur in any two or more months in a six-month period. The TRCs for the two groups of pollutants are as follows:

- Group I Pollutants (TRC) = 1.4
- Group II Pollutants (TRC) = 1.2

The following is a listing of the Group I and Group II pollutants.

Group I Pollutants

Oxygen Demand

- Biochemical Oxygen Demand
- Chemical Oxygen Demand
- Total Oxygen Demands
- Total Organic Carbon
- Other

Solids

- Total Suspended Solids (Residues)
- Total Dissolved Solids (Residues)
- Other

Nutrients

- Inorganic Phosphorus Compounds
- Inorganic Nitrogen Compounds
- Other

Detergents and Oils

- MBAS
- NTA
- Oil and Grease
- Other detergents or algicides

Minerals

- Calcium
- Chloride
- Fluoride
- Magnesium
- Sodium

- Potassium
- Sulfur
- Sulfate
- Total Alkalinity
- Total Hardness
- Other Minerals

Metals

- Aluminum
- Cobalt
- Iron
- Vanadium

Group II Pollutants

Metals (all forms)

- Other metals not specifically listed under Group I

Inorganic

- Cyanide
- Total Residual Chlorine

Organics

- All organics are Group II except those specifically listed under Group I.

b. Criteria for Category I Violations of Monthly Average Permit Effluent Limits—Chronic

Violations of monthly average permit effluent limits which are exceeded in any four or more months in a six-month period.

PART 127—NPDES ELECTRONIC REPORTING

■ 12. The authority citation for part 127 continues to read as follows:

Authority: 33 U.S.C. 1251 *et seq.*

■ 13. In § 127.16, revise the table in paragraph (a) to read as follows:

§ 127.16 Implementation of electronic reporting requirements for NPDES permittees, facilities, and entities subject to this part [see § 127.1(a)].

(a) * * *

TABLE 1 TO § 127.16(a)—COMPLIANCE DEADLINES FOR ELECTRONIC SUBMISSIONS OF NPDES INFORMATION

NPDES information	Compliance deadlines for electronic submissions [1]
General Permit Reports [Notices of Intent to discharge (NOIs); Notices of Termination (NOTs); No Exposure Certifications (NOEs); Low Erosivity Waivers (LEWs) and other Waivers] [40 CFR 122.26(b)(15), 122.28, and 122.64].	December 21, 2025.
Discharge Monitoring Reports [40 CFR 122.41(l)(4)]	December 21, 2016.
Biosolids Annual Program Reports [40 CFR part 503]	December 21, 2016 (when the Regional Administrator is the Director). [2] December 21, 2025 (when the state, tribe or territory is the authorized NPDES program). [2]
Concentrated Animal Feeding Operation (CAFO) Annual Program Reports [40 CFR 122.42(e)(4)]	December 21, 2025.
Municipal Separate Storm Sewer System (MS4) Program Reports [40 CFR 122.34(d)(3) and 122.42(c)]	December 21, 2025.
POTW Pretreatment Program Annual Reports [40 CFR 403.12(i)]	December 21, 2025.
Significant Industrial User Compliance Reports in Municipalities Without Approved Pretreatment Programs [40 CFR 403.12(e) and (h)].	December 21, 2025.
Sewer Overflow/Bypass Event Reports [40 CFR 122.41(l)(4), (6), (7), and 122.41(m)(3)]	December 21, 2025.
CWA 316(b) Annual Reports [40 CFR part 125 subparts I, J, and N]	December 21, 2025.

[1] EPA may approve an alternative compliance deadline for general permit reports and program reports in accordance with § 127.24(e) and (f).
[2] Note: Director is defined in 40 CFR 122.2.

* * * * *

■ 14. In § 127.21, revise paragraph (b) to read as follows:

§ 127.21 Data to be reported electronically to EPA by states, tribes, and territories.

* * * * *

(b) States, tribes, and territories that have received authorization from EPA to implement the NPDES program must electronically transfer these data, listed in § 127.21(a), to EPA within 40 days of the completed activity or within 40 days of the receipt of a report from a NPDES permittee, facility, or entity subject to this part (*see* § 127.1(a)). EPA may set an alternative compliance deadline for data sharing for one or more facilities, general permit reports, program reports, and related data elements (*see* 40 CFR 127.24) provided this alternative compliance date does not extend beyond December 21, 2028.

■ 15. In § 127.24, revise the section heading and add paragraphs (e) and (f) to read as follows:

§ 127.24 Responsibilities regarding review of waiver requests from NPDES permittees, facilities, and entities subject to this part [see § 127.1(a)] and alternative compliance deadlines.

* * * * *

(e) A state, tribe, or territory that is designated by EPA as the initial recipient (*see* §§ 127.2(b) and 127.27) for a NPDES data group [as defined in § 127.2(c)] may submit a request to EPA to establish an alternative compliance deadline for electronic reporting of one or more general permit reports, program reports, and related data elements (*see* Table 2 to appendix A). A State may request to establish an alternative compliance deadline for up to three years beyond the currently applicable date but not beyond December 21, 2028. It is the duty of the authorized NPDES program to apply for a new alternative compliance deadline.

(1) The alternative compliance deadline request shall:

(i) Be submitted to EPA by the Director, as defined in 40 CFR 122.2;

(ii) Identify each general permit, program report, and related data elements covered by the request and the corresponding alternative compliance deadline(s);

(iii) Identify each facility covered by the request and the corresponding alternative compliance deadline(s) (*Note:* This only applies if the request covers some but not all facilities subject to the general permit or program report requirement);

(iv) Be submitted at least 120 days prior to the applicable compliance deadline in Table 1 to 40 CFR 127.16 or an alternative compliance deadline previously approved by EPA; and

(v) Provide a rationale for the delay and enough details (*e.g.,* tasks, milestones, roles and responsibilities, necessary resources) to clearly describe how the program will successfully implement electronic reporting for general permit, program report, and related data elements covered by the request.

(2) EPA will review each alternative compliance deadline request to see if it provides enough detail to accurately assess if the state has a reasonable plan

to deploy electronic reporting by the requested alternative compliance deadline. EPA will return alternative compliance deadline requests with insufficient detail back to the Director within 30 days of receipt and provide recommendations. EPA intends to approve or deny each complete alternative compliance deadline request within 120 days of receipt. EPA will provide notice to the authorized NPDES program of EPA's approval or denial. The authorized NPDES program may re-apply if the initial request is denied by EPA.

(3) EPA will update its website after it approves a request to clearly identify the approved alternative compliance deadlines for each facility, general permit report, program report, and related data elements by authorized NPDES program. EPA will also post each alternative compliance deadline request and the corresponding Agency approval or denial notice after each determination. EPA will provide updated information on its website.

(f) EPA may, as it deems appropriate, establish an alternative compliance deadline for electronic reporting and data sharing for one or more facilities, general permit reports, program reports, and related data elements (*see* Table 2 to appendix A) in one or more authorized NPDES programs. EPA may establish an alternative compliance deadline up to three years beyond the currently applicable date, but in no event beyond December 21, 2028. Separately, EPA will provide notice to each authorized NPDES program covered by each alternative compliance deadline. This notice will detail how EPA will implement electronic reporting (when EPA is responsible for deploying one or more electronic reporting tools) or how it will receive data from authorized NPDES programs (when the authorized NPDES program is responsible for deploying one or more electronic reporting tools). EPA will update its website to clearly identify the alternative compliance deadlines for each facility, general permit report, program report, and related data elements by authorized NPDES program. This paragraph does not change the process for designating the initial recipient of electronic NPDES information from NPDES-regulated facilities. *See* § 127.27.

■ 16. In appendix A to part 127:

■ a. In table 1, revise the entry for ''9''; and

■ b. In table 2:

■ i. Under the center heading ''Basic Permit Information'', revise the entries ''Permit Component'', ''Applicable Effluent Limitations Guidelines'', ''NAICS Code'', and ''NAICS Code Primary Indicator'';

■ ii. Under the center heading ''Basic Permit Information'', remove the entries for ''Reportable Noncompliance Tracking'' and ''Reportable Noncompliance Tracking Start Date'';

■ iii. Under the center heading ''Permitted Feature Information'', remove the entry for ''Receiving Waterbody Name for Permitted Feature'' and add in its place ''Waterbody Name for Permitted Feature'';

■ iv. Remove the center heading ''Animal Feeding Operation Information on NPDES Permit Application or Notice of Intent'' and add in its place ''Animal Feeding Operation Information'';

■ v. Under the newly revised center heading ''Animal Feeding Operation Information'', remove the entry for ''Facility CAAP Designation'' and add in its place ''Facility CAAP Status'';

■ vi. Under the center heading ''Pretreatment Information on NPDES Permit Application or Notice of Intent (this includes permit application data required for all new and existing POTWs (40 CFR 122.21(j)(6))'', remove the entry for ''Applicable Categorical Standards'';

■ vii. Under the center heading ''Cooling Water Intake Information on NPDES Permit Application or Notice of Intent'', revise the entry for ''Source Water for Cooling Purposes'';

■ viii. Remove the center heading ''CWA section 316(a) Thermal Variance Information on NPDES Permit Application or Notice of Intent'' and add in its place ''NPDES Variance Information'';

■ ix. Under the newly revised center heading ''NPDES Variance Information'', remove the entry ''Thermal Variance Request Type'' and add in its place ''Variance Type'' and remove the entry ''Thermal Variance Granted Date'' and add in its place ''Variance Action Date'';

■ x. Under the newly revised center heading ''NPDES Variance Information'', add entries for ''Variance Request Version'', ''Variance Status'', and ''Variance Submission Date'' after the entry for ''Variance Type'';

■ xi. Under the center heading ''Compliance Monitoring Activity Information (Program Data Generated from Authorized NPDES Programs and EPA)'', revise the entries for ''Deficiencies Identified Through the Biosolids/Sewage Sludge Compliance Monitoring'', ''Deficiencies Identified Through the MS4 Compliance Monitoring'', ''Deficiencies Identified Through the Pretreatment Compliance Monitoring'', and ''Deficiencies Identified Through the Sewer Overflow/Bypass Compliance Monitoring''; and

■ xii. Under the center heading ''Compliance Monitoring Activity Information (Data Elements Specific to Sewage Sludge/Biosolids Annual Program Reports)'', remove the entry ''Biosolids or Sewage Sludge—Land Application or Surface Disposal Deficiencies'' and add in its place ''Biosolids or Sewage Sludge-Violations''.

The revisions and additions read as follows:

Appendix A to Part 127—Minimum Set of NPDES Data

* * * * *

TABLE 1—DATA SOURCES AND REGULATORY CITATIONS [1]

NPDES data group No.[2]	NPDES data group	Program area	Data provider	Minimum frequency [3]
*	*	*	*	*
9	Sewer Overflow/Bypass Event Reports [40 CFR 122.41(l)(4), (6), (7), and 122.41(m)(3)].	Sewer Overflows and Bypass Events.	NPDES Permittee	Within 5 days of the time the permittee becomes aware of the sewer overflow event (health or environment endangerment); Monitoring report frequency specific in permit (all other sewer overflow and bypass events); At least 10-days before the date of the anticipated bypass; and Within 5-days of the time the permittee becomes aware of the unanticipated bypass.

TABLE 1—DATA SOURCES AND REGULATORY CITATIONS [1]—Continued

NPDES data group No.[2]	NPDES data group	Program area	Data provider	Minimum frequency [3]
*	*	*	*	*

[1] Entities regulated by a NPDES permit will comply with all reporting requirements in their respective NPDES permit.

[2] Use the ''NPDES Data Group Number'' in this table and the ''NPDES Data Group Number'' column in Table 2 of this appendix to identify the source of the required data entry. EPA notes that electronic systems may use additional data to facilitate electronic reporting as well as management and reporting of electronic data. For example, NPDES permittees may be required to enter their NPDES permit number (''NPDES ID''—NPDES Data Group 1 and 2) into the applicable electronic reporting system in order to identify their permit and submit a Discharge Monitoring Report (DMR—NPDES Data Group 3). Additionally, NPDES regulated entities may be required to enter and submit data to update or correct erroneous data. For example, NPDES permittees may be required to enter new data regarding the Facility Individual First Name and Last Name (NPDES Data Group 1 and 2) with their DMR submission when there is a facility personnel change.

[3] The applicable reporting frequency is specified in the NPDES permit or control mechanism, which may be more frequent than the minimum frequency specified in this table.

TABLE 2—REQUIRED NPDES PROGRAM DATA

Data name	Data description	CWA, regulatory (40 CFR), or other citation	NPDES data group No. (see Table 1)
*	*	*	*
Basic Permit Information			
*	*	*	*
Permit Component	This will identify one or more applicable NPDES subprograms (e.g., pretreatment, CAFO, CSO, POTW, biosolids/sewage sludge, stormwater) for the permit record. This field is only required when the permit includes one or more NPDES subprograms. This data element is also required for unpermitted facilities when the authorized NPDES programs is required to share facility, inspection, violation, or enforcement action data regarding these facilities with EPA's national NPDES data system.	122.2, 122.21, 122.21(j)(6), 122.21(q), 122.28(b)(2)(ii), 123.26, 123.41(a), 123.43(d), 403.10, and 501.19.	1, 2.
*	*	*	*
Applicable Effluent Limitations Guidelines.	This data element will identify the one or more applicable effluent limitations guidelines and new source performance standards for the facility by the corresponding 40 CFR part number (e.g., part 414—Organic chemicals, plastics, and synthetic fibers point source category, part 433—Metal Finishing point source category). For Categorical Industrial Users (CIUs) this data element will track the one or more applicable categorical standards even when the CIU is subject to one or more local limits that are more stringent than the applicable categorical standards. This data element will also identify if there are no applicable effluent limitations guidelines, new source performance standards, or categorical standards for the facility (including Significant Industrial Users (SIUs)). This data element can be updated by the Control Authority for SIUs and CIUs through submission of the Pretreatment Program Reports [40 CFR 403.12(i)]. Additionally, the authorized NPDES program can automate the creation of these data through submission of the Notices of Intent to discharge (NOI) [40 CFR 122.28(b)(2)(ii)].	122.21, 122.21(j)(6), 122.21(q), 122.44, 122.44(j), 122.28(b)(2)(ii), 403.10(e), 403.10(f), 403.12(i).	1, 2, and 7.
*	*	*	*
NAICS Code	The one or more six-digit North American Industry Classification System (NAICS) codes/descriptions that represents the economic activity of the facility. This field is required to be shared with the U.S. EPA when authorized NPDES programs approve NPDES permit coverage after June 12, 2021 (i.e., two years after the effective date of the 2019 NPDES Applications and Program Updates Rule). See February 12, 2019; 84 FR 3324.	40 CFR 122.21(f)(3), 122.28(b)(2)(ii), EPA SIC/NAICS Data Standard, Standard No. EX000022.2, 6 January 2006, Office of Management and Budget, Executive Office of the President, Final Decision on North American Industry Classification System (62 FR 17288), 403.10(f).	1, 2, and 7.

TABLE 2—REQUIRED NPDES PROGRAM DATA—Continued

Data name	Data description	CWA, regulatory (40 CFR), or other citation	NPDES data group No. (see Table 1)
NAICS Code Primary Indicator.	This data element will identify the primary economic activity, NAICS code, of the facility. This data element is required for electronic data transfer between state and EPA systems. This field is required to be shared with the U.S. EPA when authorized NPDES programs approve NPDES permit coverage after June 12, 2021 (i.e., two years after the effective date of the 2019 NPDES Applications and Program Updates Rule). See February 12, 2019; 84 FR 3324.	40 CFR 122.21(f)(3), 122.28(b)(2)(ii), EPA SIC/NAICS Data Standard, Standard No. EX000022.2, 6 January 2006, Office of Management and Budget, Executive Office of the President, Final Decision on North American Industry Classification System (62 FR 17288), 403.10(f).	1, 2, and 7.
*	*	*	*
Permitted Feature Information			
*	*	*	*
Waterbody Name for Permitted Feature.	The name of the waterbody that is or will likely receive the discharge from each permitted feature. If the permitted feature is a cooling water intake structure, this data element is the name of the source water. Authorized NPDES programs can also use this data element to identify the name of the source water for other intake structures that are permitted features.	122.21, 122.21(f)(9), 122.28(b)(2)(ii)	1,2.
*	*	*	*
Animal Feeding Operation Information			
Facility CAAP Status	The unique code/description to indicate whether the facility includes Concentrated Aquatic Animal Production (CAAP) and the CAAP identification method [e.g., ''Yes (Based on Facility Production Data)'', ''Yes (Authorized NPDES Program Designation)'']. This field also applies when an authorized NPDES program has conducted an on-site inspection of an aquatic animal production facility and determined that the facility should not be regulated under the NPDES permit program [e.g., ''No (Authorized NPDES Program Determination)'']. This data element only applies to aquatic animal production facilities. This data element can be automatically generated from production data that is provided by aquatic animal production facilities.	122.21(i)(2), 122.24, 122.25, 122.28(b)(2)(ii)	1,2.
*	*	*	*
Cooling Water Intake Information on NPDES Permit Application or Notice of Intent			
*	*	*	*
Source Water for Cooling Purposes.	The unique code/description that describes the one or more source water for cooling purpose for each cooling water intake structure [*e.g.,* 1 = Ocean, 2 = Estuary, 3 = Great Lake, 4 = Fresh River, 5 = Lake/Reservoir, 6 = contract or arrangement with an independent supplier (or multiple suppliers)]. Each cooling water intake structure will have its own ''Permitted Feature ID''	122.21(f)(9), 122.21(r), 122.28(b)(2)(ii), 125.86, 125.95, 125.136, 401.14 and CWA section 316(b).	1, 2.
*	*	*	*
NPDES Variance Information			
Variance Type	The unique code(s)/description(s) that describes the type for each variance request submitted by the NPDES-regulated entity [e.g., fundamentally different factors (CWA Section 301(n)), non-conventional pollutants (CWA Section 301(c) and (g)), water quality related effluent limitations (CWA Section 302(b)(2)), thermal discharges (CWA Section 316(a)), discharges to marine waters (CWA Section 301(h))]. This field is required to be shared with the U.S. EPA when authorized NPDES programs approve NPDES permit coverage after June 12, 2021 (i.e., two years after the effective date of the 2019 NPDES Applications and Program Updates Rule). See February 12, 2019; 84 FR 3324.	122.21(f)(10), 122.21(j)(1)(ix), 122.28(b)(2)(ii), 123.41, subpart H of 125 and CWA section 316(a).	1.

TABLE 2—REQUIRED NPDES PROGRAM DATA—Continued

Data name	Data description	CWA, regulatory (40 CFR), or other citation	NPDES data group No. (see Table 1)
Variance Request Version	The unique code(s)/description(s) that describe whether each variance request from the NPDES-regulated entity is a new request, renewal, or a continuance for variances that do not expire. This field is required to be shared with the U.S. EPA when authorized NPDES programs approve NPDES permit coverage after June 12, 2021 (i.e., two years after the effective date of the 2019 NPDES Applications and Program Updates Rule). See February 12, 2019; 84 FR 3324.	122.21(f)(10), 122.21(j)(1)(ix), 122.28(b)(2)(ii), 123.41, subpart H of 125 and CWA section 316(a).	1.
Variance Status	The unique code(s)/description(s) that describes the status for each the variance request submitted by the NPDES-regulated entity (e.g., pending, approved, denied, withdrawn by NPDES-regulated entity, terminated). This field is required to be shared with the U.S. EPA when authorized NPDES programs approve NPDES permit coverage after June 12, 2021 (i.e., two years after the effective date of the 2019 NPDES Applications and Program Updates Rule). See February 12, 2019; 84 FR 3324.	122.21(f)(10), 122.21(j)(1)(ix), 122.28(b)(2)(ii), 123.41, subpart H of 125 and CWA section 316(a).	1.
Variance Submission Date	This is the date for each variance request submitted by the NPDES-regulated entity to the NPDES permitting authority. The date must be provided in YYYY–MM–DD format where YYYY is the year, MM is the month, and DD is the day. This field is required to be shared with the U.S. EPA when authorized NPDES programs approve NPDES permit coverage after June 12, 2021 (i.e., two years after the effective date of the 2019 NPDES Applications and Program Updates Rule). See February 12, 2019; 84 FR 3324.	122.21(f)(10), 122.21(j)(1)(ix), 122.28(b)(2)(ii), 123.41, subpart H of 125 and CWA section 316(a).	1.
Variance Action Date	This is the date for each variance request when the NPDES permitting authority approves (grants, renews), denies, or terminates a variance request as well as the date when the NPDES-regulated entity withdraws the variance request. For variances that do not expire, this is the original action date. The date must be provided in YYYY–MM–DD format where YYYY is the year, MM is the month, and DD is the day. This field is required to be shared with the U.S. EPA when authorized NPDES programs approve NPDES permit coverage after June 12, 2021 (i.e., two years after the effective date of the 2019 NPDES Applications and Program Updates Rule). See February 12, 2019; 84 FR 3324.	122.21(f)(10), 122.21(j)(1)(ix), 122.28(b)(2)(ii), 123.41, subpart H of 125 and CWA section 316(a).	1.
*	*	*	*	*	*	*
Compliance Monitoring Activity Information (Program Data Generated from Authorized NPDES Programs and EPA)			
Deficiencies Identified Through the Biosolids/Sewage Sludge Compliance Monitoring.	This is the unique code/description that that identifies each deficiency in the facility's biosolids and sewage sludge program (40 CFR part 503) for each compliance monitoring activity (e.g., inspections, audits) by the regulatory authority. This data element includes unique codes to identify when the facility failed to comply with any applicable permit requirements or enforcement actions.	123.26, 123.41(a), and CWA section 308	1.
Deficiencies Identified Through the MS4 Compliance Monitoring.	This is the unique code/description that that identifies each deficiency in the MS4's program to control stormwater pollution for each compliance monitoring activity (e.g., inspections, audits) by the regulatory authority. This data element includes unique codes to identify when the MS4 failed to comply with any applicable permit requirements or enforcement actions.	123.26, 123.41(a), and CWA section 308	1.
Deficiencies Identified Through the Pretreatment Compliance Monitoring.	This is the unique code/description that that identifies each deficiency in the POTW's authorized pretreatment program for each pretreatment compliance monitoring activity (e.g., inspections, audits) by the regulatory authority. These unique codes include: (1) Failure to enforce against pass through and/or interference; (2) failure to submit required reports within 30 days; (3) failure to meet compliance schedule milestones within 90 days; (4) failure to issue/reissue control mechanisms to 90% of SIUs within 6 months; (5) failure to inspect or sample 80% of SIUs within the past 12 months; and (6) failure to enforce standards and reporting requirements.	123.26, 123.41(a), 403.10, and CWA section 308	1.

TABLE 2—REQUIRED NPDES PROGRAM DATA—Continued

Data name	Data description	CWA, regulatory (40 CFR), or other citation	NPDES data group No. (see Table 1)
Deficiencies Identified Through the Sewer Overflow/Bypass Compliance Monitoring.	This is the unique code/description that that identifies each deficiency in the POTW's control of combined sewer overflows, sanitary sewer overflows, or bypass events for each compliance monitoring activity (e.g., inspections, audits) by the regulatory authority. This data element includes unique codes to identify when a POTW has failed to provide 24-hour notification to the NPDES permitting authority or failed to submit the Sewer Overflow/Bypass Event Report within the required 5-day period. This data element also includes unique codes to identify when the POTW failed to comply with any applicable long-term CSO control plan, permit requirements, or enforcement actions.	122.41(h), 122.41(l)(6) and (7), 122.43, 123.26, 123.41(a), and CWA sections 308 and 402(q)(1).	1.
*	*	*	*
Compliance Monitoring Activity Information (Data Elements Specific to Sewage Sludge/Biosolids Annual Program Reports)		
*	*	*	*
Biosolids or Sewage Sludge—Violations.	This data element is applicable to facilities that use land application, active surface disposal site (e.g., monofills, surface impoundments, lagoons, waste piles, dedicated disposal sites, and dedicated beneficial use sites), and/or incineration. This data element uses one or more unique codes/descriptions to identify all violations. This includes violations of additional or more stringent requirements (40 CFR 503.5), sampling and analysis requirements (40 CFR 503.8), land application requirements (40 CFR 503, Subpart B), surface disposal requirements (40 CFR 503, Subpart C), pathogen and vector attraction reduction requirements (40 CFR 503, Subpart D), and incineration requirements (40 CFR 503, Subpart E).	503.18, 503.28, 503.48	4.
*	*	*	*

Notes:

(1) The NPDES program authority may pre-populate these data elements and other data elements (*e.g.,* Federal Registry System ID) in the NPDES electronic reporting systems in order to create efficiencies and standardization. For example, the NPDES program authority may configure their electronic reporting system to automatically generate NPDES IDs for control mechanisms for new facilities reported on a Pretreatment Program Report [40 CFR 403.12(i)]. Additionally, the NPDES program authority may decide whether to allow NPDES regulated entities to override these pre-populated data.

(2) The data elements in this table conform to the EPA's policy regarding the application requirements for renewal or reissuance of NPDES permits for discharges from Phase I municipal separate storm sewer systems (published in the FEDERAL REGISTER on August 6, 1996).

(3) The data elements in this table are also supported by the Office Management and Budget approved permit applications and forms for the NPDES program.

(4) These data will allow EPA and the NPDES program authority to link facilities, compliance monitoring activities, compliance determinations, and enforcement actions. For example, these data will provide several ways to make the following linkages: linking violations to enforcement actions and final orders; linking single event violations and compliance monitoring activities; linking program reports to DMRs; linking program reports to compliance monitoring activities; and linking enforcement activities and compliance monitoring activities.

PART 403—GENERAL PRETREATMENT REGULATIONS FOR EXISTING AND NEW SOURCES OF POLLUTION

■ 17. The authority citation for part 403 continues to read as follows:

Authority: 33 U.S.C. 1251 *et seq.*

■ 18. In § 403.12, revise paragraphs (e)(1), (h), and (i) to read as follows:

§ 403.12 Reporting requirements for POTW's and industrial users.

* * * * *

(e) * * *

(1) Any Industrial User subject to a categorical Pretreatment Standard (except a Non-Significant Categorical User as defined in § 403.3(v)(2)), after the compliance date of such Pretreatment Standard, or, in the case of a New Source, after commencement of the discharge into the POTW, shall submit to the Control Authority during the months of June and December, unless required more frequently in the Pretreatment Standard or by the Control Authority or the Approval Authority, a report indicating the nature and concentration of pollutants in the effluent which are limited by such categorical Pretreatment Standards. In addition, this report shall include a record of measured or estimated average and maximum daily flows for the reporting period for the Discharge reported in paragraph (b)(4) of this section except that the Control Authority may require more detailed reporting of flows. In cases where the Pretreatment Standard requires compliance with a Best Management Practice (or pollution prevention alternative), the User shall submit documentation required by the Control Authority or the Pretreatment Standard necessary to determine the compliance status of the User. At the discretion of the Control Authority and in consideration of such factors as local high or low flow rates, holidays, budget cycles, etc., the Control Authority may modify the months during which the above reports are to be submitted. For Industrial Users for which EPA or the authorized state, tribe, or territory is the Control Authority, as of December 21, 2025 or an EPA-approved alternative date (*see* 40 CFR 127.24(e) or (f)), all reports submitted in compliance with this section must be submitted electronically by the industrial user to the Control Authority or initial recipient, as defined in 40 CFR 127.2(b), in compliance with this section and 40 CFR part 3 (including, in all cases, subpart D to part 3), 40 CFR 122.22, and 40 CFR part 127. 40 CFR part 127 is not intended to undo existing requirements for electronic reporting. Prior to this date, and independent of 40 CFR part 127, the Industrial Users for which EPA

or the authorized state, tribe, or territory is the Control Authority may be required to report electronically if specified by a particular control mechanism or if required to do so by state law.

* * * * *

(h) *Reporting requirements for Industrial Users not subject to categorical Pretreatment Standards.* The Control Authority must require appropriate reporting from those Industrial Users with Discharges that are not subject to categorical Pretreatment Standards. Significant Non-categorical Industrial Users must submit to the Control Authority at least once every six months (on dates specified by the Control Authority) a description of the nature, concentration, and flow of the pollutants required to be reported by the Control Authority. In cases where a local limit requires compliance with a Best Management Practice or pollution prevention alternative, the User must submit documentation required by the Control Authority to determine the compliance status of the User. These reports must be based on sampling and analysis performed in the period covered by the report, and in accordance with the techniques described in 40 CFR part 136 of this chapter and amendments thereto. This sampling and analysis may be performed by the Control Authority in lieu of the significant non-categorical Industrial User. For Industrial Users for which EPA or the authorized state, tribe, or territory is the Control Authority, as of December 21, 2025 or an EPA-approved alternative date (*see* 40 CFR 127.24(e) or (f)), all reports submitted in compliance with this section must be submitted electronically by the industrial user to the Control Authority or initial recipient, as defined in 40 CFR 127.2(b), in compliance with this section and 40 CFR part 3 (including, in all cases, subpart D to part 3), 40 CFR 122.22, and 40 CFR part 127. 40 CFR part 127 is not intended to undo existing requirements for electronic reporting. Prior to this date, and independent of 40 CFR part 127, the Industrial Users for which EPA or the authorized state, tribe, or territory is the Control Authority may be required to report electronically if specified by a particular control mechanism or if required to do so by state law.

(i) *Annual POTW reports.* POTWs with approved Pretreatment Programs shall provide the Approval Authority with a report that briefly describes the POTW's program activities, including activities of all participating agencies, if more than one jurisdiction is involved in the local program. The report required by this section shall be submitted no later than one year after approval of the POTW's Pretreatment Program, and at least annually thereafter, and must include, at a minimum, the applicable required data in appendix A to 40 CFR part 127. The report required by this section must also include a summary of changes to the POTW's pretreatment program that have not been previously reported to the Approval Authority and any other relevant information requested by the Approval Authority. As of December 21, 2025 or an EPA-approved alternative date (*see* 40 CFR 127.24(e) or (f)), all annual reports submitted in compliance with this section must be submitted electronically by the POTW Pretreatment Program to the Approval Authority or initial recipient, as defined in 40 CFR 127.2(b), in compliance with this section and 40 CFR part 3 (including, in all cases, subpart D to 40 CFR part 3), 40 CFR 122.22, and 40 CFR part 127. 40 CFR part 127 is not intended to undo existing requirements for electronic reporting. Prior to this date, and independent of 40 CFR part 127, the Approval Authority may also require POTW Pretreatment Programs to electronically submit annual reports under this section if specified by a particular permit or if required to do so by state law.

* * * * *

PART 503—STANDARDS FOR THE USE OR DISPOSAL OF SEWAGE SLUDGE

■ 19. The authority citation for part 503 continues to read as follows:

Authority: Sections 405 (d) and (e) of the Clean Water Act, as amended by Pub. L. 95–217, sec. 54(d), 91 Stat. 1591 (33 U.S.C. 1345 (d) and (e)); and Pub. L. 100–4, title IV, sec. 406 (a), (b), 101 Stat., 71, 72 (33 U.S.C. 1251 *et seq.*).

■ 20. Revise § 503.18 to read as follows:

§ 503.18 Reporting.

Class I sludge management facilities, POTWs (as defined in § 501.2 of this chapter) with a design flow rate equal to or greater than one million gallons per day, and POTWs that serve 10,000 people or more shall submit a report on February 19 of each year. As of December 21, 2016, all reports submitted in compliance with this section must be submitted electronically by the operator to EPA when the Regional Administrator is the Director in compliance with this section and 40 CFR part 3 (including, in all cases, subpart D to part 3), 40 CFR 122.22, and 40 CFR part 127. Otherwise, as of December 21, 2025, or an EPA-approved alternative date (*see* 40 CFR 127.24(e) or (f)), all reports submitted in compliance with this section must be submitted electronically in compliance with this section and 40 CFR part 3 (including, in all cases, subpart D to 40 CFR part 3), 40 CFR 122.22, and 40 CFR part 127. 40 CFR part 127 is not intended to undo existing requirements for electronic reporting. Prior to the compliance deadlines for electronic reporting (*see* Table 1 in 40 CFR 127.16), the Director may also require operators to electronically submit annual reports under this section if required to do so by State law.

(a) The information in § 503.17(a), except the information in § 503.17(a)(3)(ii), (a)(4)(ii) and in (a)(5)(ii), for the appropriate requirements on February 19 of each year.

(b) The information in § 503.17(a)(5)(ii)(A) through (G) on February 19th of each year when 90 percent or more of any of the cumulative pollutant loading rates in Table 2 of § 503.13 is reached at a land application site.

■ 21. Revise § 503.28 to read as follows:

§ 503.28 Reporting.

Class I sludge management facilities, POTWs (as defined in 40 CFR 501.2) with a design flow rate equal to or greater than one million gallons per day, and POTWs that serve 10,000 people or more shall submit a report on February 19 of each year. As of December 21, 2016, all reports submitted in compliance with this section must be submitted electronically by the operator to EPA when the Regional Administrator is the Director in compliance with this section and 40 CFR part 3 (including, in all cases, subpart D to 40 CFR part 3), 40 CFR 122.22, and 40 CFR part 127. Otherwise, as of December 21, 2025, or an EPA-approved alternative date (*see* 40 CFR 127.24(e) or (f)), all reports submitted in compliance with this section must be submitted electronically in compliance with this section and 40 CFR part 3 (including, in all cases, subpart D to 40 CFR part 3), 40 CFR 122.22, and 40 CFR part 127. 40 CFR part 127 is not intended to undo existing requirements for electronic reporting. Prior to the compliance deadlines for electronic reporting (see Table 1 in 40 CFR 127.16), the Director may also require operators to electronically submit annual reports under this section if required to do so by state law.

■ 22. Revise § 503.48 to read as follows:

§ 503.48 Reporting.

Class I sludge management facilities, POTWs (as defined in § 501.2 of this chapter) with a design flow rate equal to or greater than one million gallons per day, and POTWs that serve a population of 10,000 people or greater shall submit a report on February 19 of each year. As of December 21, 2016, all reports submitted in compliance with this section must be submitted electronically by the operator to EPA when the Regional Administrator is the Director in compliance with this section and 40 CFR part 3 (including, in all cases, subpart D to 40 CFR part 3), 40 CFR 122.22, and 40 CFR part 127. Otherwise, as of December 21, 2025, or an EPA-approved alternative date (see 40 CFR 127.24(e) or (f)), all reports submitted in compliance with this section must be submitted electronically in compliance with this section and 40 CFR part 3 (including, in all cases, subpart D to part 3), 40 CFR 122.22, and 40 CFR part 127. 40 CFR part 127 is not intended to undo existing requirements for electronic reporting. Prior to the compliance deadlines for electronic reporting (see Table 1 in 40 CFR 127.16), the Director may also require operators to electronically submit annual reports under this section if required to do so by state law.

[FR Doc. 2020–21446 Filed 10–30–20; 8:45 am]

BILLING CODE 6560–50–P

DEPARTMENT OF THE INTERIOR

Bureau of Land Management

43 CFR Part 8340

[LLWO430000.L12200000.XM0000.20x 24 1A]

RIN 1004–AE72

Increasing Recreational Opportunities Through the Use of Electric Bikes

AGENCY: Bureau of Land Management, Interior.

ACTION: Final rule.

SUMMARY: The Bureau of Land Management (BLM) is amending its off-road vehicle (ORV) regulations to add a definition for electric bikes (e-bikes) and, where certain criteria are met and an authorized officer expressly determines through a formal decision that e-bikes should be treated the same as non-motorized bicycles, expressly exempt those e-bikes from the definition of ORV. The regulatory change effectuated by this rule has the potential to facilitate increased recreational opportunities for all Americans, especially those with physical limitations, and could encourage additional enjoyment of lands and waters managed by the BLM.

DATES: This final rule is effective on December 2, 2020.

FOR FURTHER INFORMATION CONTACT: Britta Nelson, National Conservation Lands and Community Partnerships, 303–236–0539. Persons who use a telecommunications device for the deaf (TDD) may call the Federal Relay Service (FRS) at 1–800–877–8339, 24 hours a day, 7 days a week, to leave a message or question with the previously mentioned point of contact. You will receive a reply during normal business hours.

SUPPLEMENTARY INFORMATION:

I. Background
II. Discussion of the Final Rule and Comments on the Proposed Rule
III. Procedural Matters

I. Background

The Federal Land Policy and Management Act (FLPMA) directs the BLM to manage public lands for multiple use and sustained yield (unless otherwise provided by law) and to provide for outdoor recreation (43 U.S.C. 1702). Many visitors ride bicycles on BLM-managed public lands. Improvements in bicycle technology have made bicycling an option for more people and have made public lands more accessible to cyclists. One bicycle design modification growing in popularity is the addition of a small electric motor that provides power assistance to the rider and reduces the physical exertion required. Electric bicycles (also known as e-bikes) are available in an ever-expanding range of design types (urban commuter, full suspension mountain, fat-tire, gear hauler bikes, etc.) and electric assist capabilities (limited by speed, wattage, output algorithms, etc.). E-bikes are commonly used in different capacities, such as transportation and recreation.

By reducing the physical demand associated with bicycling, e-bikes expand recreational opportunities for the public, including for people with limitations stemming from age, illness, disability, or fitness, and in more challenging environments, such as high altitudes or mountainous terrain. The presence of a small electric motor on e-bikes, however, has created uncertainty about whether e-bikes should be treated in the same manner as other types of non-motorized bicycles or as ORVs subject to the BLM's regulations at 43 CFR part 8340.

On August 29, 2019, the Secretary of the Interior issued Secretary's Order (SO) 3376 to address regulatory uncertainty regarding how agencies within the Department of the Interior (DOI) manage e-bikes. Specifically, SO 3376 sets forth the general policy of the DOI that e-bikes should be allowed where non-motorized types of bicycles are allowed and not allowed where non-motorized types of bicycles are prohibited. SO 3376 directs the BLM to revise its ORV regulations at 43 CFR 8340.0–5 to be consistent with SO 3376. The Bureau of Reclamation, U.S. Fish and Wildlife Service, and National Park Service are also revising their regulations for consistency with SO 3376.

II. Discussion of the Final Rule and Comments on the Proposed Rule

The BLM published a proposed rule on April 10, 2020 (85 FR 20229), soliciting public comments for 60 days. During the comment period, the BLM received almost 24,000 submissions from members of the public, including senior citizens, avid cyclists, hikers, equestrians and equestrian associations, and cycling organizations and manufacturers, as well as state and local governments. Each public comment was considered in the development of the final rule. Many comments were supportive of the proposed rule, with some expressing support for increased opportunities for people to ride e-bikes on public lands and for e-bikes to be treated similarly to traditional, non-motorized bikes by land managers. The BLM also received comments that were critical of the proposed rule. Some of these comments expressed concern over potential user conflicts or resource damage that may result from allowing e-bikes on roads and trails that are currently closed to ORVs. Meanwhile, some comments expressed a desire for consistency in the management of e-bikes across different agencies.

In the proposed rule, the BLM requested information from the public on the potential social and physical impacts of e-bike use on public lands. Studies and reports were provided in conjunction with many of the comments and cover a variety of topics, such as safety, hazards, health benefits, user conflict, attitudes and perceptions, elk behavior, soil displacement, speed comparisons, impacts to grizzly bears, snowmobiles, impacts to wildlife, impacts of roads, strategic planning, crash likelihood, and battery flammability. While some studies and reports address e-bikes specifically, others do not. Many studies extrapolate their findings to e-bike use, management, and effects. The BLM

considered these studies and reports while developing the final rule.

Comments received that are similar in nature have been categorized by subject and, in some instances, have been combined with related comments.

Discussion of Comments by Topic

Need for a Rule

Comment: Some commenters stated the rule would be inconsistent with the direction in Executive Order (E.O.) 11644, ''Use of Off-Road Vehicles on the Public Lands.'' These commenters assert that the rule's exclusion of e-bikes from the ORV requirements of this E.O. is arbitrary and capricious.

Response: E.O. 11644 was issued by President Nixon in 1972 and amended by President Carter in 1977 (E.O. 11989). It establishes policies and procedures for managing the use of ORVs to protect the resources of the public lands, promote safety of all users of the lands, and minimize conflicts among those users. The E.O. defines ORVs as any motorized vehicle designed for or capable of cross-country travel on or immediately over land, water, sand, snow, ice, marsh, swampland, or other natural terrain. Certain vehicles that would otherwise fall within this broad definition are expressly excluded, including, but not limited to, any registered motorboat; any fire, military, emergency, or law enforcement vehicle when used for emergency purposes; and any vehicle whose use is expressly authorized by the respective agency head under a permit, lease, license, or contract. Under the E.O., the administrative designation of the specific areas and trails on which the use of ORVs may be permitted must be based on specific criteria designed to protect resources, promote user safety, and minimize conflicts among the various uses of public lands.

E-bikes are not referenced in E.O. 11644, which is not surprising given that the technological advances needed to popularize them, such as torque motors and power controls, were not developed until the mid-1990s. While the e-bikes addressed in this rule have a small electric motor and are capable of cross-country travel over land, there are multiple reasons why it is reasonable to provide authorized officers with discretion to manage Class 1, 2, and 3 e-bikes in the same manner as non-motorized bicycles and unlike ORVs, where appropriate.

First, providing authorized officers with discretion to manage e-bikes similar to non-motorized bicycles in certain instances does not undercut the E.O.'s intent. E.O. 11644 was designed to address the expanding and wholly unregulated use of ORVs on public lands, much of which involved cross-country travel that did not occur on identified roads and trails and was harming historical and archaeological sites, among other resources. Such use was also putting ORV users at risk, particularly due to the existence of uncovered abandoned mine shafts on public lands. By comparison, the Class 1, 2, and 3 e-bike use that could be allowed under this rule would be limited to roads and trails that traditional, non-motorized bicycles can already use. Therefore, users will not likely expose resources or themselves to the type of harm that E.O. 11644 was intended to mitigate.

Second, the Class 1, 2, and 3 e-bikes that are the subject of this rule differ significantly in their engineering from the types of ORVs that are identified in E.O. 11644 and that the Executive Branch sought to regulate in 1972. These vehicles include the ''motorcycles, mini-bikes, trial bikes, snowmobiles, dune-buggies, [and] all-terrain vehicles,'' which are expressly referenced in E.O. 11644. They also include ''motorcycles of various sorts (minibikes, dirt bikes, enduros, motocross bikes, etc.), four-wheel drive vehicles such as Jeeps, Land Rovers, or pickups, snowmobiles, dune buggies, and all-terrain vehicles'' mentioned in a 1979 report by the Council on Environmental Quality (CEQ) that discusses the requirements of E.O. 11644 in great detail and evaluates efforts undertaken by federal land management agencies to comply with them. Although E.O. 11644 and the CEQ report did not attempt to list every type of vehicle that may fall within the definition of ORV, the marked differences in the overall design and function between the identified vehicles and Class 1, 2, and 3 e-bikes is telling. The clearly-identified ORVs have internal combustion engines and do not have pedals or other design features that allow for human propulsion. To be treated similar to a non-motorized bicycle under this rule, however, an e-bike must have operable pedals, be capable of relying on human power, and only derive some assistance from a small, electric motor. Moreover, the ORVs that the E.O. clearly applies to are uniformly larger, louder, and, due to their more powerful engines, capable of achieving greater speeds than Class 1, 2, and 3 e-bikes.

Third, as a result of the aforementioned engineering differences, e-bikes, unlike the larger, more powerful vehicles referenced in E.O. 11644 tend to affect resources and other public land users in a manner and scope similar to traditional, non-motorized bicycles. Allowing e-bikes on roads and trails that are already open to non-motorized bike use will therefore not result in the types of resource impacts and user conflicts that E.O. 11644 was designed to address. For example, the ORVs referenced in E.O. 11644 and the 1979 CEQ report are powered by internal combustion engines that generate loud noises (*i.e.,* anywhere from 90–110 decibels, depending on the type of vehicle), which are capable of carrying over long distances. The noise associated with e-bikes includes the sound of their tires rolling over a road or trail and, at most, a low, steady whine that may be emitted when the electric motor is engaged. While the effects of noise on wildlife differ across taxonomic groups and reactions to sound are different for every visitor, the impacts on quietude, wildlife behavioral patterns, and other recreational uses caused by e-bikes are expected to be similar to those caused by traditional, non-motorized bicycles and substantially less than those resulting from typical motor vehicle use or even the vehicles listed in the E.O. Also, unlike those latter vehicles, e-bikes do not emit exhaust that could impact air quality and the health of nearby users. Finally, a review of available models shows that Class 1, 2, and 3 e-bikes are generally much lighter than even the lightest ORV listed in the E.O. A typical e-bike weighs approximately 45–50 pounds, which is only slightly heavier than a typical traditional, non-motorized bicycle's weight of 30–35 pounds. In comparison, minibikes, which are the lightest ORV listed in E.O. 11644, weigh an average of 115–130 pounds, typical trial bikes can weigh 145 pounds, and motorcycles can weigh approximately 300–400 pounds. The significantly lower weight of e-bikes, combined with the lower levels of torque that they are capable of generating, and the lower speeds that they are capable of reaching, limit their potential to cause soil compaction and erosion. This was demonstrated by a recent study conducted by the International Mountain Bicycling Association. That study, which measured relative levels of soil displacement and erosion resulting from traditional, non-motorized mountain bikes, e-bikes, and gasoline-powered dirt bikes, found that soil displacement and tread disturbance from e-bikes and traditional, non-motorized mountain bikes were not significantly different, and both were much less than those associated with gas-powered dirt bikes.

Although the study focused on the impacts from Class 1 e-bikes, it is likely that the impacts would be similar for Class 2 e-bikes. Both classes provide motorized assistance up to 20 miles per hour and, under this rule, Class 2 e-bikes may not be ridden in throttle-only actuation for extended periods of time. Class 3 e-bikes, which aside from providing motorized assistance up to 28 miles per hour, are generally similar in design, engineering, size, and weight to Class 1 e-bikes.

Fourth, managing Class 1, 2, and 3 e-bikes similarly to traditional, non-motorized bicycles and distinguishing them from other motor vehicles is consistent with how other federal agencies regulate e-bikes. Defined by Congress in the Consumer Product Safety Act (Pub. L. 107–319, Dec. 4, 2002; codified at 15 U.S.C. 2085) as low-speed electric bicycles, e-bikes are not considered to be motor vehicles under 49 U.S.C. 30102; therefore, they are not subject to regulation by the National Highway Traffic Safety Administration. Instead, e-bikes are regulated similarly to non-motorized bicycles and considered consumer products regulated by the Consumer Product Safety Commission.

Comment: Some commenters stated that the rule is unnecessary because the BLM manages sufficient motorized trails for e-bikes.

Response: The BLM currently manages, and will continue to manage, motorized trails for e-bikes, among other uses. The popularity of e-bikes, however, is increasing significantly. Market research from the NPD Group's bicycle industry statistics from 2018 shows that e-bikes are currently the fastest growing bicycle type in the market with e-bike sales totaling $77.1 million in 2017, up 91% from 2016, with sales of e-bikes growing more than eight-fold since 2014. Considering e-bikes' growing popularity, the BLM needs additional administrative tools to regulate them appropriately. This rule will provide authorized officers with greater flexibility to manage e-bikes in the future and enable BLM's management of e-bikes to be more consistent with the approach of adjacent land managers and other DOI agencies.

Comment: Some commenters stated that the BLM does not need a rulemaking to designate trail access for e-bikes, where appropriate.

Response: This final rule provides additional specificity regarding how the BLM may allow the use of e-bikes, or classes of e-bikes, on non-motorized roads and trails; clarifies that, under certain conditions, e-bikes are to be treated similarly to traditional bicycles; and provides authorized officers the discretion to treat them accordingly. Under existing regulations, e-bikes are managed as ORVs and can be allowed, based on site-specific considerations, on roads and trails that are located in areas designated as ''Open'' or ''Limited'' to ORV use in applicable land use plans. E-bikes are not currently allowed in areas that land use plans have closed to ORV use, some of which contain roads and trails available to traditional, non-motorized bicycles. Because this rule provides authorized officers with discretion to issue a decision that excludes Class 1, 2, and 3 e-bikes from the definition of ORVs at 43 CFR 8340.0–5(a), the final rule could facilitate e-bike use on roads and trails in areas that are closed to ORV use and help the BLM achieve its goal of providing greater access to public lands, particularly to people with limitations.

Comment: Several commenters suggested that the BLM should abandon the rulemaking and that the DOI should fund additional studies to consider the impacts of e-bikes on public lands.

Response: The BLM considered the studies and reports received in response to the BLM's request for information on the proposed rule and determined that the current body of literature supports its decision to empower authorized officers to allow e-bikes on non-motorized roads and trails. The current literature indicates that e-bikes do not tend to be more dangerous than traditional, non-motorized bicycles and that e-bikes and non-motorized bicycles have similar impacts on public health and safety. Where e-bike accidents do occur, they tend to involve a single e-bike during mounting and dismounting and are less likely to involve other road users. The current body of literature also indicates that e-bikes displace soil and contribute to erosion in ways that are similar to traditional, non-motorized bicycles. Moreover, a 2019 review conducted by Boulder County, Colorado, found little in the literature to suggest that e-bikes are more likely to impact wildlife differently than traditional, non-motorized bicycles.

In sum, the current body of literature is sufficient for the BLM to conclude that the differences in impacts between e-bikes and non-motorized bicycles will, at most, likely be minor. The BLM recognizes, however, that e-bikes are an emerging technology and acknowledges that the body of literature on e-bikes will increase over time. Authorized officers will have the opportunity to consider new scientific and other relevant information when determining whether to authorize e-bikes on non-motorized roads and trails through future site-specific decision-making processes.

Comment: Some commenters stated that the BLM failed to provide a reasoned explanation for the proposed changes in defining e-bikes as non-motorized. Several commenters suggested that the BLM continue to manage e-bikes as ORVs.

Response: As previously noted, allowing authorized officers to exclude e-bikes from the definition of ORV in certain situations will help the BLM account for the fact that, in both their engineering and impacts, e-bikes are more like traditional, non-motorized bicycles than other motorized vehicles. The rule change will also help align how agencies across the DOI regulate e-bikes and make the BLM's regulation of e-bikes more consistent with that of other non-DOI federal agencies, such as the National Highway Traffic Safety Administration and the Consumer Product Safety Commission. Finally, because the rule will provide authorized officers with the authority to allow e-bikes on roads and trails that are located within ''OHV Closed'' areas under applicable land use plans, the rule will help fulfill the DOI's policy of increasing recreational opportunities for all Americans, especially those with physical limitations.

Comment: Some commenters stated that the rule does not reconcile a discrepancy with the BLM's Travel and Transportation Management Manual.

Response: After publication of this final rule, the BLM may determine it is necessary to update agency policy, including manuals, handbooks, and other guidance materials, for consistency with the new rule.

User Conflicts

Comment: Several commenters expressed concern about potential conflicts between e-bikes and other users of public lands. These concerns included potential safety issues from user interactions and speed differences between e-bike users and equestrians or hikers. These commenters suggested that increased e-bike use would cause certain users to avoid using trails where these conflicts could occur and could change the visitation patterns of existing trail users. Some commenters stated the rule may lead to ''technological displacement,'' whereby recreational users with new and more advanced forms of transportation degrade the experience of and displace traditional users.

Response: The BLM will consider potential conflicts with other users when considering whether Class 1, 2, or 3 e-bikes should be allowed on specific

roads and trails through future planning or implementation-level decision-making processes. While the existing body of literature demonstrates that e-bikes tend to be ridden in a manner similar to traditional, non-motorized bicycles and are generally compatible with existing recreational uses of BLM-managed roads and trails that are already open to traditional bicycle use, the agency recognizes that there may be situations where that is not the case. The BLM also recognizes that new technologies can, in some situations, result in the displacement of other, less technologically advanced recreational uses. The BLM will consider potential conflicts between e-bikes and other recreational uses on individual roads and trails through future National Environmental Policy Act (NEPA) processes before any new e-bike use is authorized.

Comment: Commenters stated that the BLM needs to analyze the potential liability that could result from e-bike accidents and injuries before finalizing a rule.

Response: The BLM will consider potential user conflicts and other public health and safety concerns in accordance with applicable law as part of a site-specific analysis. In the event that accidents or injuries were to occur as a result of or in conjunction with e-bike use, liability, if any, would be determined in accordance with applicable laws, which may include the Federal Tort Claims Act.

Comment: Some commenters expressed a concern that the rule would result in existing motorized trail opportunities being lost if those trails are reclassified for the exclusive use of bikes or e-bikes.

Response: The final rule will allow the BLM more flexibility to increase e-bike opportunities on existing non-motorized trails without reclassifying existing ORV trails. Under this rule, Class 1, 2, and 3 e-bikes may be excluded from the definition of ORV and thereby allowed on certain non-motorized roads or trails where they were previously prohibited. The rule would not affect the use of e-bikes or other motorized vehicles on the use of roads and trails where ORV use is currently allowed.

Economic and Threshold Analysis

Comment: Several commenters disagreed with conclusions in the Economic and Threshold Analysis that the rule would not impact public safety.

Response: This rule is not self-executing—it does not authorize any new e-bike use on BLM-managed roads and trails—and does not have any direct impacts on public safety. The BLM prepared an Economic and Threshold Analysis for the proposed rule, which concluded that the rule itself would not adversely affect, in a substantial way, the economy, a sector of the economy, productivity, competition, jobs, the environment, public health or safety, or state, local, or tribal governments or communities. The Economic and Threshold Analysis and proposed rule discussed the potential for an increase in conflicts among trail users following site-specific implementation of the rule, as well as an increase in the risk of injury or need for rescue. The existing body of literature concerning the impacts of e-bikes suggests, however, that the potential for conflicts and an increase in the risk of injury is likely to be low. Studies from Europe that focus on commuter use found that e-bike use results in accidents and hospital admissions at a similar rate to conventional, non-motorized bicycle use. Another study found that the road situations in which crashes occur do not differ between e-bikes and traditional bikes and that crashes with e-bikes are about equally severe as crashes with traditional bikes. Still another study showed riders of e-bike and traditional, non-motorized bicycles exhibit similar safety behavior. Given differences in current use across sites, potential e-bike use, and visitor preferences, it is not feasible to estimate the net effect of e-bike use across all BLM road and trails at this time. Therefore, based on the existing literature, the BLM concludes that e-bike use will likely have minimal impacts on public safety.

Comment: Some commenters suggested that the economic consequences of the displacement of traditional trail users must be addressed in the final rule.

Response: The rule is not self-executing, so no users will be displaced as a result of the rule. Potential conflicts between users will be evaluated in a site-specific analysis.

National Environmental Policy Act (NEPA) Analysis

Comment: Commenters stated that the rule disregards research demonstrating adverse impacts from e-bikes and has not analyzed e-bike compatibility.

Response: The body of research on impacts and compatibility of e-bike use is still developing. For that reason, as discussed earlier, the BLM's proposed rule requested information from the public on the potential social and physical impacts of e-bike use on public lands. The BLM received many studies and reports in response to its request, which it reviewed and considered in coordination with the other DOI agencies promulgating e-bike rules. Although not all the studies and reports specifically addressed e-bike use, many of them contained useful information that the BLM considered when drafting this final rule. For example, they demonstrated that the public tends to ride e-bikes and traditional, non-motorized bicycles at similar speeds. In one survey of bikes on county trails, the average e-bike speed was less (13.8 miles per hour (mph)) than the average conventional bike speed (14.5 mph). Other studies found that on-road, e-bike riders (13.3 kilometers per hour (kph)) achieved higher speeds than regular bicyclists (10.4 kph), but shared use path (greenway) speeds of e-bike riders (11.0 kph) were lower than regular bicyclists (12.6 kph), and that average riding speed on an e-mountain bike was approximately 4 mph faster than speeds on a conventional mountain bike.

Another study, which found that e-bike users are equally likely to be admitted to hospitals as traditional bike users if they need treatment at an emergency department after a bicycle crash, demonstrated that e-bikes and traditional, non-motorized bicycles have similar impacts on public health. Other studies demonstrated that all forms of recreation may have negative impacts on wildlife behavior and habitat and that elk tend to avoid areas where humans recreate, resulting in habitat compression. Many of these studies, however, did not address e-bikes specifically, and none of them conclusively demonstrated that e-bikes have more adverse impacts on wildlife than non-motorized bicycles.

Authorized officers will account for the information in these studies, as well as any relevant future studies, when considering whether to authorize the use of e-bikes on non-motorized roads and trails. These studies will be particularly useful at the site-specific level, where more detailed information on potential effects will be available and authorized officers can consider specific user incompatibility, resource impacts, and other issues.

Comment: Some commenters asserted that the rule cannot be categorically excluded under 43 CFR 46.210(i) because it is not ''of an administrative, financial, legal, technical, or procedural nature.''

Response: This rule is administrative and procedural in nature and satisfies the first prong of the categorical exclusion at 43 CFR 46.210(i). The rule is not self-executing and does not authorize the use of any e-bikes use in areas where e-bikes are currently not allowed. The rule merely establishes a

definition of e-bikes and creates a process for authorized officers to consider when determining whether to authorize e-bike use on public lands. That process describes how authorized officers will consider whether to allow for e-bike use on roads and trails. The rule preserves authorized officers' discretion to either approve or deny the use of e-bikes on roads and trails and to impose limitations or restrictions on authorized e-bike use to minimize impacts on resources and conflicts with other recreational uses. Additionally, the rule maintains the public's ability to participate in any such BLM decision-making process. When considering whether to allow Class 1, 2, and 3 e-bikes on non-motorized roads and trails, the BLM must comply with NEPA and other laws providing for public participation. Before deciding to authorize e-bike use, the BLM will consider comments it receives from Federal, state, county, and local agencies, Tribes, local landowners, and other interested members of the public. Under BLM policy, application of the minimization criteria identified in E.O. 11644 and incorporated into 43 CFR 8342.1 involves limiting the degree or magnitude of the action, as those terms are defined in the CEQ's NEPA regulations. Although this rule would not require the BLM to apply the minimization criteria to authorize e-bike use on non-motorized roads and trails, the BLM's legal obligation to consider the degree or magnitude of impacts associated with e-bike use through the NEPA process will nonetheless facilitate the minimization of impacts on resources and users. The rule, because it is administrative and procedural in nature and would not result in any on-the-ground changes or other environmental effects, satisfies the first prong of the categorical exclusion at 43 CFR 46.210(i).

Comment: Some commenters requested an environmental assessment or environmental impact statement to analyze the environmental consequences of the rulemaking to help inform future decisions about whether to authorize e-bike use. These commenters stated that the rule cannot be categorically excluded under 43 CFR 46.210(i) because the environmental effects are not ''too broad, speculative, or conjectural to lend themselves to meaningful analysis.''

Response: This rule also satisfies the second prong of the categorical exclusion at 43 CFR 46.210(i). Unlike some rules, this rule is not suited to the preparation of a NEPA analysis from which future site-specific analyses can tier. The future implementation of the procedures in this rule is uncertain. Moreover, the environmental consequences from any such future implementation would be evaluated in future NEPA documents but at this time are too broad, speculative, and conjectural to evaluate meaningfully. As discussed previously in this rule, the body of literature concerning the impacts of e-bike use is still developing. While the existing literature demonstrates that the general impacts associated with e-bikes are very similar to those from traditional, non-motorized bicycles, the actual impacts that may result from allowing e-bikes on roads and trails on which non-motorized bicycles are allowed will depend primarily on the site-specific conditions of the roads and trails on which e-bike use is contemplated. These conditions vary significantly across BLM-managed lands and, as a result, given existing literature, are currently too speculative to lend themselves to meaningful analysis at a Bureau-wide scale. For example, some roads and trails may be on sagebrush steppe or high plateaus, while others are in Eastern hardwood forests and on the Pacific coast. Some roads and trails may be in areas that are commonly visited by backpackers, bird watchers, and other recreational users seeking solitude, while others may be located in areas commonly utilized by equestrians, rock climbers, or hunters. Additionally, some roads and trails may be in areas near urban centers that see significant visitation, while others are in remote areas that see very few visitors. As a result of these differences, local conditions will ultimately dictate what impacts can be expected from e-bike use on certain roads and trails. Therefore, the BLM will not be able to analyze meaningfully those impacts through the NEPA processes until it can account for that site-specificity through future land use planning or implementation-level proposals. As a result, the BLM's reliance on the second prong of the categorical exclusion at 43 CFR 46.210(i) is appropriate.

Comment: Some commenters requested the preparation of supporting analyses to determine thresholds for wildlife disturbance from e-bikes on BLM land, including information regarding the extent to which affected trails overlap with designated critical habitat.

Response: The BLM will consider the impacts of Class 1, 2, and 3 e-bikes on wildlife through the NEPA process that accompanies future site-specific proposals to authorize e-bike use on roads and trails on which traditional, non-motorized bicycles are currently allowed. Considering impacts on wildlife at the site-specific level will allow the BLM to better evaluate the potential effects of e-bike use on specific populations of animals; consult with the appropriate federal, state, and local resources agencies regarding potential resource impacts; and develop site-specific design features and/or mitigation strategies. It would be shortsighted for a rule of this nature to prescribe disturbance thresholds, even making them mandatory, as that would preclude the use of future science and information or require further revisions to the regulations in order to incorporate new science and information.

Comment: Some commenters state that future implementation actions allowing Class 1, 2, and 3 e-bikes on roads and trails are connected actions under NEPA that are inextricably intertwined with the proposed rule and must be fully analyzed now. Similarly, other commenters state that the BLM has improperly segmented these connected actions to rely on the categorical exclusion at 43 CFR. 46.210(i).

Response: Future implementation actions allowing or disallowing e-bikes on roads and trails that are open to traditional, non-motorized bicycles are not connected actions that are inextricably intertwined with the rule and must undergo NEPA analysis in conjunction with this rulemaking. Future decision-making is facilitated by the rule, but it is not required or automatically triggered by it. Instead, authorized officers will determine whether to initiate proposals to allow Class 1, 2, and 3 e-bikes on currently non-motorized roads and trails on an individualized basis. Authorized officers will also determine whether to allow or disallow e-bikes on those roads and trails on an individualized basis, as the rule does not mandate any specific outcomes. Additionally, future proposals to allow or disallow e-bikes are not connected actions because the BLM could authorize e-bike use on roads and trails on which traditional, non-motorized bicycles are allowed in the absence of this rule. As some commenters pointed out, the BLM could allow Class 1, 2, and 3 e-bikes on roads and trails that are currently non-motorized under its current regulations and travel management policies and without excluding them from the definition of ORV. Indeed, as these same commenters additionally noted, some BLM field offices are currently considering opening single-track mountain biking trails to e-bikes through their current travel management plans. Finally, future implementation actions are not connected actions

because they are not interdependent or dependent on a larger action for their justification. Site-specific decision-making can proceed under the rule in the absence of, and completely independent from, other site-specific proposals to allow e-bike use on BLM-managed lands.

Extraordinary Circumstances

Comment: Some commenters stated that extraordinary circumstances under 43 CFR 46.215 apply to this rulemaking, prohibiting the BLM from relying on the categorical exclusion at 43 CFR 46.210(i). Commenters cited the following extraordinary circumstances under 43 CFR 46.215.

(a) *Significant impacts on public health or safety.*

• *Comment:* Commenters stated that they provided documentation of significant safety impacts of e-bikes within their comment, including citations to numerous supporting studies.

• *Response:* Because this rule will not result in any on-the-ground changes or authorize any new e-bike use on BLM lands, it will not have any direct impacts on public health and safety. Additionally, relevant literature demonstrates that the rule should not have significant indirect impacts on public health or safety as a result of future site-specific decisions allowing e-bikes on roads and trails upon which non-motorized bicycles are allowed. For example, studies show that, although e-bikes enable riders to travel longer distances and carry more cargo with them, they are generally ridden at speeds similar to non-motorized bicycles. In fact, a survey conducted by Boulder County, Colorado, found that, on average, e-bikes were ridden more slowly than non-motorized bicycles on county trails. Other studies found that e-bike and non-motorized bicycle riders behave similarly, violate applicable rules similarly, have similar accident rates, and are admitted to hospitals after a crash at similar rates. While the relevant body of literature on e-bikes continues to develop, existing research allows the BLM to predict that the effects of this rule on public health and safety will be insignificant.

(b) *Significant impacts on natural resources and unique geographic characteristics.*

• *Comment:* Commenters stated that the rule will have significant impacts on recreation, national monuments, and other vulnerable categories identified in 43 CFR 46.215(b).

• *Response:* The rule will not have significant impacts on the natural resources and unique geographic characteristics identified in 43 CFR 46.215(b). This rule will not result in any on-the-ground changes. Specifically, it will not authorize the use of Class 1, 2, or 3 e-bikes on any roads or trails upon which they are currently prohibited. Any future changes would require future NEPA processes that will consider the impacts that e-bikes may have on natural resources and unique geographic characteristics. If e-bike use is proposed in an area identified in 43 CFR 46.215(b), such as a national monument, then the potential significance of impacts would be a factor in determining the appropriate level of NEPA analysis at that time.

(c) *Highly controversial environmental effects or unresolved conflicts concerning alternative uses of available resources.*

• *Comment:* Commenters stated that e-bike use on public lands is becoming highly controversial and involves unresolved conflicts concerning alternative uses of available resources, with generally no effort to study the impacts of e-bike use. Commenters stated that there is conflicting data about the significance of impacts of e-bikes in comparison with motorized vehicles and traditional mountain bikes, creating disputes regarding the effects of conflicts from e-bike use on non-motorized trails. Some commenters stated that e-bike use is highly controversial, with numerous major stakeholders and interest groups taking ''pro'' and ''con'' sides, fitting the definition of ''highly controversial.''

• *Response:* 43 CFR 46.215(c) pertains to whether the environmental effects of a proposed action are highly controversial (*i.e.,* there is significant scientific disagreement about whether a specific action will impact the environment, and how). There is not significant scientific disagreement about how or whether this rule will impact the environment. Because this rule merely creates a process for allowing Class 1, 2, and 3 e-bike use in the future and does not directly authorize their use on any roads or trails upon which they are currently prohibited, it will have no impact on the environment. There also is not a significant scientific disagreement about how e-bikes generally impact the environment. While the body of literature concerning the environmental impacts of e-bikes is still developing, the studies that were submitted by the public during the public comment period demonstrate that the impacts associated with e-bikes are similar to the well-understood impacts associated with traditional, non-motorized bicycles. Notably, the studies show that e-bikes and traditional, non-motorized bicycles travel at relatively similar speeds, pose similar health and public safety risks, impact wildlife similarly, and displace soil and contribute to erosion in ways that are similar to each other and significantly different than a gas-powered dirt bike. In sum, the studies are consistent in their discussion of impacts associated with e-bikes and do not demonstrate significant scientific disagreement about this rule or how e-bikes, generally, may impact the environment.

(d) *Highly uncertain and potentially significant environmental effects or involve unique and unknown environmental risk.*

• *Comment:* Commenters stated that the extent of environmental impacts is uncertain, given that e-bikes are growing in popularity as an emerging recreational use with data collection and studies warranted. Commenters stated that the BLM does not consider the uncertain and potential impacts of e-bike use, defers this analysis, and directs pre-determined outcomes. Commenters stated that the categorical exclusion should not apply because of unique risks presented by e-bikes (*e.g.,* backcountry use, safety, and user conflicts due to the speed of an e-bike).

• *Response:* This rule does not change any on-the-ground e-bike allowances, and the environmental effects associated with it are not highly uncertain. To the extent that the rule will have any environmental effects, they will result from future site-specific decisions, which are left to the discretion of the authorized officer and will be supported by additional NEPA processes. Moreover, the environmental effects associated with e-bikes generally are not highly uncertain. While there is always some uncertainty when making predictions about how human activities will impact the natural world, the existing literature demonstrates that e-bike impacts are similar to those of traditional, non-motorized bicycles. Allowing e-bikes on roads and trails that are already open to non-motorized bicycles will therefore not have significant impacts on the environment. Studies discussing impacts on wildlife are instructive in this regard. They show that, while all forms of recreation may negatively impact wildlife habitat, motorized all-terrain vehicles tend to have greater adverse impacts on wildlife compared to traditional, non-motorized bicycles, and there is little in the peer-reviewed literature to suggest that e-bikes have greater negative impacts than traditional, non-motorized bicycles. Similarly, a study performed by the

International Mountain Bicycling Association found that soil displacement and tread disturbance from e-bikes and traditional, non-motorized mountain bikes were not significantly different; in fact, both were much less than those associated with gas-powered dirt bikes. In light of this existing body of literature, and the absence of any studies clearly showing that e-bikes impact the environment in a manner that differs significantly from non-motorized bicycles, the BLM has reasonably concluded that the impacts associated with this rule are not highly uncertain. To the extent that the existing body of literature on the impacts of e-bikes continues to develop, authorized officers will consider new, relevant studies when analyzing future site-specific proposals.

(e) *Establish a precedent for future action or represent a decision in principle about future actions with potentially significant environmental effects.*

• *Comment:* Commenters stated that the rule establishes a precedent for future actions with potentially significant environmental effects, creates a presumption that e-bikes are allowed on non-motorized trails, and largely predetermines the outcome of relevant land management planning or implementation-level decisions. Commenters stated that the rule encourages BLM offices to make decisions without addressing the potentially significant environmental effects. Commenters stated that the rule fails to consider its precedential importance and the associated commercialization of BLM-administered lands, opening the floodgates for numerous similar technological impacts.

• *Response:* The rule does not establish a precedent or represent a decision in principle about how authorized officers should treat e-bikes in the future. As discussed later in greater detail, the BLM recognizes how language in the proposed rule, which provided that authorized officers ''should generally allow'' e-bikes on roads and trails upon which mechanized, non-motorized use is allowed, could be understood to create a presumption in favor of e-bike use that would bias future BLM decision-making. In response, the BLM has revised the final rule to state that authorized officers ''may allow'' e-bikes on roads and trails open to non-motorized bicycles. This change is intended to clarify that authorized officers have full discretion to determine whether e-bike use, or the use of only certain classes of e-bikes, is appropriate on individual roads and trails. Therefore, it reinforces that authorized officers have authority to, and should, consider the potential impacts associated with e-bikes before authorizing their site-specific use and it emphasizes that the rule does not direct any specific substantive changes or establish a precedent for purposes of 43 CFR 46.215(e).

(f) *Direct relationship to other actions with individually insignificant but cumulatively significant environmental effects.*

• *Comment:* Commenters stated that cumulative impacts of all BLM units approving e-bikes will be significant when considered nationwide.

• *Response:* The rule will not have a direct relationship to other actions with individually insignificant but cumulatively significant environmental effects. The rule, and future implementation actions that will occur in accordance with it, are not connected actions and their impacts do not have to be analyzed in tandem. The rule will not automatically trigger future proposals to authorize e-bikes on roads and trails that are open to traditional, non-motorized bicycles. Whether such decisions will occur will be determined by authorized officers on an individualized basis. At the same time, the rule does not mandate any specific outcomes. It provides authorized officers with discretion to determine whether e-bike use is appropriate on individual roads and trails and does not require or suggest that authorized officers consider how determinations are being made in other field offices. To the contrary, in light of limited agency resources and highly variable geography, the BLM designed the rule to allow site-specific decision-making to proceed in the absence of, and completely independent from, other site-specific proposals to allow e-bike use on BLM-managed lands.

(g) *Significant impacts on properties listed, or eligible for listing, on the National Register of Historic Places.*

• *Comment:* Commenters stated that many BLM units contain current or potentially listed historic places, and some were established specifically to protect such places, so in light of their special national importance, the rule for system-wide approval is improper.

• *Response:* The rule does not change current authorized uses. Therefore, the rule itself will not have significant impacts on properties listed, or eligible for listing, on the National Register of Historic Places. If the BLM does propose to allow Class 1, 2, or 3 e-bikes on non-motorized roads and trails, the authorized officer will consider the potential impacts on historic properties in determining the appropriate level of NEPA analysis for the proposed action. Even in that situation, however, impacts on historic properties are unlikely to be significant. That is because the rule will only allow e-bike use on non-motorized roads and trails that are already open to traditional, non-motorized bicycles, and, as discussed throughout this rule, the impacts associated with e-bikes are similar to those associated with traditional, non-motorized bicycles.

(h) *Significant impacts on species listed, or proposed to be listed, on the list of endangered or threatened species or significant impacts on designated critical habitat.*

• *Comment:* Commenters stated that the BLM has not complied with Section 7(a)(2) of the Endangered Species Act and that the rule will have significant impacts on endangered or threatened species.

• *Response:* For the same reasons it will not have significant impacts on properties listed, or eligible for listing, on the National Register of Historic Places, the rule will not have significant impacts on species listed, or proposed to be listed, as endangered or threatened species, or on designated critical habitat for these species. As noted previously, the rule does not allow e-bike use on any roads or trails on which it is currently prohibited. Any new e-bike allowances will be the result of future site-specific decision-making processes that will comply with the Endangered Species Act, as applicable. Additionally, because any future allowances will be limited to roads and trails on which traditional, non-motorized bicycles are allowed, the BLM anticipates that any impacts stemming from new e-bike use will be insignificant.

(i) *Violate a federal law, or a state, local, or tribal law or requirement imposed for the protection of the environment.*

• *Comment:* Commenters stated that allowing e-bikes on non-motorized trails threatens to violate laws designed to protect resources on public lands and that allowing e-bikes on non-motorized trails without designating those trails for motorized use is contrary to federal law and longstanding travel management regulations and policies. Commenters stated that the rule also threatens to violate various state and local laws governing e-bike use on trails and that state, local, and Forest Service definitions and requirements for e-bikes differ and conflict from BLM proposals. Commenters stated that this creates the potential for significant jurisdictional challenges and violations of such differing standards imposed for the

protection of the environment. Commenters stated that these extraordinary circumstances require the BLM to conduct additional analysis for the rule.

• *Response:* This final rule does not violate a federal law or requirement imposed for the protection of the environment. As discussed previously, although the e-bikes addressed in this rule have a small electric motor, their engineering and impacts and their similarities to non-motorized bicycles and differences from other motorized vehicles result in this rule being consistent with the overall design and intent of E.O. 11644. Allowing authorized officers to exclude e-bikes from the E.O.'s definition of ORV also makes the BLM's management of e-bikes more consistent with that of other federal agencies, including the Consumer Product Safety Commission. Additionally, the rule does not violate a state, local, or tribal law or requirement imposed for the protection of the environment. The rule provides authorized officers with the discretion to consider applicable state, local, or tribal laws and requirements when determining whether to allow e-bikes on roads and trails that are open to traditional, non-motorized bicycles. Authorized officers will account for these laws and requirements when deciding whether e-bike use is appropriate on specific roads and trails.

Public Comment Process

Comment: Some commenters stated that the length of the public review period was not sufficient and that a public meeting should be scheduled. Some commenters stated that the pandemic has created obstacles to public participation and that rulemaking should be postponed. Some commenters asserted that the BLM was failing to comply with its requirements under FLPMA for public involvement. The commenters state that FLPMA requires that the BLM give ''the public adequate notice and an opportunity to comment upon the formulation of standards and criteria for, and to participate in, the preparation and execution of plans and programs for, and the management of, the public lands.''

Response: In accordance with the Administrative Procedure Act and applicable policy, the BLM provided a 60-day public comment period that began on Friday, April 10, 2020, and ended on Tuesday, June 9, 2020. During that time, the BLM received almost 24,000 public comments, which suggests that the 60-day public review period was adequate for the public to respond to the proposed rule. Public meetings are not required for informal rulemaking under the Administrative Procedure Act. The BLM will provide the public with opportunities to respond to future, site-specific implementation of the rule in accordance with NEPA and other applicable laws.

E-Bike Definition

Comment: Some commenters stated that the e-bike classification system and its associated speed limits are not supported by evidence.

Response: The definition of e-bike included in this the rule, which relies on a ''3-class system'' originally created by the bicycling industry, establishes a consistent definition for use across all DOI agencies. To date, at least 28 states have adopted the 3-class system into their regulations for e-bikes. The BLM incorporated the 3-class system into its definition of e-bike to achieve greater consistency with how other jurisdictions and entities are regulating e-bikes.

Comment: Some commenters asserted that the rule limits the discretion of the authorized officer to make individualized decisions on e-bike use and that e-bike use should be managed separately from traditional bike use.

Response: The BLM has revised paragraph 8342.2(d) to provide that authorized officers ''may allow'' e-bikes on roads and trails upon which mechanized, non-motorized use is allowed. This change is intended to clarify that the rule does not mandate any specific outcomes and to alleviate any concern that the rule limits the discretion of authorized officers about whether and where to allow e-bike use on BLM-managed public lands. The authorized officer will consider site-specific conditions, including environmental impacts and potential user conflicts, before deciding to allow or disallow e-bike use on specific roads and trails.

Comment: Commenters suggested that the BLM limit e-bike use to trails that are very wide or paved and to not permit their use on steep, single-track trails. Other commenters suggested that the BLM specifically allow e-bikes on motorized paths and non-motorized paths with improved surfaces.

Response: Each trail, area, field office, district office, etc., presents a unique set of circumstances that may make e-bike use appropriate in certain situations and not in others. The inherent variability in BLM-managed lands is better accounted for by a rule that establishes a framework for future decision-making and relies on local expertise to determine where e-bike use should be allowed. Through planning or implementation-level decision-making processes, authorized officers will determine whether certain types of roads and trails are appropriate for e-bike use.

Comment: Some commenters suggested that, instead of excluding e-bikes from the definition of ORVs, the BLM should add a category of ''low-powered vehicles'' to the regulations for management separately from bicycles or ORVs.

Response: The intent of this rule is to expand recreational access to public lands through the use of e-bikes, treat e-bikes similarly to traditional bikes, as appropriate, and to establish consistency in the DOI regarding how e-bikes are managed. Other ''low-powered'' vehicles, such as scooters and skateboards, are not similar to, and provide a different experience than, traditional, non-motorized bicycles, and are not addressed in this rule.

Comment: Some commenters requested that the rule be revised to state that all bicycle trails and routes would be open to e-bikes.

Response: Rather than promulgating a rule that opens all mechanized, non-motorized trails and roads to e-bike use, the BLM believes that authorized officers should have the discretion and flexibility to determine where e-bikes will be allowed through subsequent decision-making. Authorized officers are most familiar with an area's natural and cultural resources, operating budget, visitor use patterns, and enforcement capabilities. They are therefore in the best position to determine where e-bike use is most appropriate. While the BLM believes that there are many situations in which e-bike use would be appropriate on roads and trails upon which mechanized, non-motorized use is permitted, there are certain instances where that may not be the case, such as where legislation or a presidential proclamation prohibits motorized use of a trail.

Comment: Some commenters suggested that only Class 1 e-bikes should be excluded from the definition of ORV. Several commenters suggested that the BLM should continue to define Class 2 and Class 3 e-bikes as ORVs. Some commenters pointed out that the different classes of e-bikes may have different impacts on the public lands and suggest that only Class 1 e-bikes should be allowed on unpaved surfaces.

Response: While the definition of e-bikes includes Class 1, 2, and 3 e-bikes, the BLM recognizes that there are differences among the classes that may

result in certain classes of e-bikes being inappropriate on individual roads and trails. The BLM has drafted the rule with these differences in mind. Under the rule, Class 2 e-bikes being ridden in throttle-only actuation for extended periods of time cannot be excluded from the definition of ORV and, therefore, must remain on roads and trails that are available for ORV use. This should reduce the potential physical damage that may result from throttle-only actuation and help ensure that the impacts associated with Class 2 e-bikes are similar to those associated with Class 1 e-bikes, which also stop providing motorized assistance to riders at 20 miles per hour. The BLM has also revised the language in 43 CFR 8342.2(d) rule to clarify that authorized officers may distinguish between the classes of e-bikes where necessary to address potential resource and user impacts. Pursuant to this change, authorized officers may consider potential resource conflicts and other relevant factors and determine that only Class 1 e-bikes should be allowed on a particular road or trail.

Comment: Some commenters suggested that three-wheeled e-bikes are incompatible with single-track trails and require an appropriate width corridor.

Response: Under paragraph 8342.2(d) of the final rule (Designation Procedures), the authorized officer may determine whether e-bike use in general, or the use of particular classes of e-bikes, would be appropriate on certain roads or trails. The authorized officer may also determine whether the use of three-wheeled e-bikes is appropriate based on site-specific circumstances, such as trail width and potential user conflicts.

Authorized Officer's Discretion

Comment: Some commenters expressed concern that the rule does not allow the authorized officer to make individualized decisions and restrictions within the classes and between e-bikes and traditional bikes. The commenters requested a change in the rule text to allow authorized officers to impose specific limitations on e-bike use or to close any road, trail, or portion thereof to e-bike use.

Response: The rule was always intended to provide authorized officers with discretion to allow either e-bikes, or certain classes of e-bikes, on particular roads or trails. In response to comments received, however, the BLM revised the final rule to include specific regulatory text in 43 CFR 8342.2(d)(1) to make clear that authorized officers may distinguish between ''certain classes'' of e-bikes when determining where e-bikes should be allowed. Authorized officers will make these site-specific decisions in consideration of potential resource impacts and user conflicts and in accordance with NEPA and other applicable laws.

Comment: Several commenters suggested that the BLM include specific factors in the regulations that the authorized officer must consider before allowing e-bikes on a particular route or trail. Some commenters suggested adding a requirement for the authorized officer to minimize environmental impacts and user conflicts.

Response: This rule provides authorized officers with discretion to determine, through a planning or implementation-level decision, whether Class 1, 2, and 3 e-bikes should be allowed on roads and trails on which mechanized, non-motorized uses are allowed. In making this decision, authorized officers will consider potential impacts to resources, conflicts with other users, and other relevant factors. The specific factors, however, will vary greatly based on the site-specific conditions at issue, and some factors may not be applicable in each circumstance. The BLM, therefore, prefers to allow authorized officers to determine the appropriate factors to consider when deciding whether to allow e-bikes on particular roads or trails. The BLM may include a discussion of possible factors to consider in future guidance issued to implement these regulations.

Other E-Bike Management

Comment: Some commenters requested an addition to the rule text to manage other e-bikes that are not Class 1, 2, or 3 as motorized vehicles.

Response: The final rule addresses only Class 1, 2, and 3 e-bikes. The BLM will continue to manage all other types of e-bikes as ORVs. E-bikes that do not meet the qualifications of Class 1, 2, or 3 bikes will not be eligible for exclusion from the definition of ORV at 43 CFR 8340.0–5 and must remain on roads and trails open to ORV use.

Comment: Some commenters requested an addition to the rule text that an eligible e-bike must be equipped with a seat or saddle for the rider.

Response: The BLM does not believe it is necessary to require an e-bike to be equipped with a seat or saddle. Some e-bikes that otherwise meet the definition of e-bike—such as trial bikes—may not have a seat, and the current definition, including the requirement that an e-bike have fully operational pedals, is sufficient to exclude other types of electric vehicles, such as scooters or skateboards.

Comment: Some commenters expressed concern that definitions for Class 1, 2, and 3 e-bikes will need to be revisited and updated to reflect future technologies.

Response: The BLM acknowledges that future changes in technology may result in some e-bikes not being eligible for exclusion from the definition of ORV at 43 CFR 8340.0–5 if they do not fit into the definition established by this rule.

Comment: Some commenters suggested that the rule should require any e-bike on BLM-managed lands to be certified by an accredited, independent third-party certification body that examines electrical and safety hazards.

Response: The BLM believes that existing federal regulations are sufficient to address potential safety hazards related to e-bike design and manufacturing. E-bikes that fall within the definition of low-speed electric bicycle at 15 U.S.C. 2085 are considered consumer products that are subject to product safety regulations promulgated by the Consumer Product Safety Commission, and e-bikes that do not fall within the definition of low-speed electric bicycle must comply with National Highway Traffic Safety Administration vehicle standards. To the extent that the operation of e-bikes on public lands may affect health and safety, the BLM will consider those potential impacts at the site-specific level when considering a planning or implementation-level proposal.

Comment: Some commenters requested that the BLM address hunting, game retrieval, and cross-country travel in the final rule.

Response: Under the final rule, only Class 1, 2, and 3 e-bikes that are being ridden on roads and trails upon which mechanized, non-motorized use is allowed will be eligible for exclusion from the definition of ORV at 43 CFR 8340.0–5(a). E-bikes being ridden cross country will not be eligible for exclusion from the definition of ORV. Such use is allowed only in areas designated as ''OHV Open'' under applicable land use plans. E-bikes may be utilized in hunting and game retrieval to the extent that their use conforms to the governing land use plan and is consistent with applicable road and trail allowances.

Conflict With State and Local Government

Comment: Some commenters stated that the rule would conflict with state and local jurisdictions that exclude e-bikes from non-motorized trails. Some commenters stated that the rule would conflict with state-based user fee

programs that define e-bikes as motorized.

Response: The final rule does not conflict with state and local rules that exclude e-bikes from non-motorized trails. First, the rule only applies to BLM-managed roads and trails. Second, as noted previously, the rule does not authorize any new e-bike use on non-motorized roads and trails. Instead, the rule provides authorized officers with discretion to determine whether certain non-motorized roads and trails are appropriate for Class 1, 2, and 3 e-bike use through planning or implementation-level decision-making processes. In making those determinations, authorized officers may consider many factors, including how e-bikes are regulated in adjacent jurisdictions. The BLM will coordinate with other federal, state, local, and tribal entities to address potential conflicts with other requirements or jurisdictions when making site-specific decisions to allow or disallow e-bikes.

Trail Funding

Comment: Some commenters stated that e-bikes would be incompatible on non-motorized trail networks that were constructed with grant funding from the Recreational Trails Program and other Federal funding sources. Some commenters stated that e-bike use might impact future trail funding from federal programs such as the Land and Water Conservation Fund.

Response: Class 1, 2, or 3 e-bike use may be inappropriate on certain roads and trails that were constructed or are maintained using funding sources which may prohibit or be inconsistent with motorized use, such as the Recreational Trails Program and other Federal funding sources authorized by Title 23, Chapter 2 of the United States Code. The BLM has designed the rule to provide authorized officers with the ability to consider whether e-bike use is consistent with potential funding sources when determining which roads and trails to allow e-bike use. Authorized officers will take these and other types of site-specific considerations into account when making future planning or implementation-level decisions concerning e-bike use.

Compliance With Laws, Policies, and Plans

Comment: Some commenters asserted that the BLM failed to consider alternatives to the proposed rule.

Response: The BLM considered less restrictive alternatives in promulgating this rule, including an approach that would have opened all public lands to e-bikes, unless otherwise restricted. That approach, however, would not account for the variability in BLM-managed lands or the resource concerns and potential user conflicts that are often specific to individual roads and trails and could lead to e-bike use in places where it is not appropriate. The BLM, therefore, concluded that determinations about where Class 1, 2, and 3 e-bike use is appropriate should be made by authorized officers at the site-specific level. Their knowledge of and access to local information will help minimize the potential impacts associated with allowing e-bikes on non-motorized roads and trails.

Comment: Some comments asserted that the rule is inconsistent with the direction of SO 3376.

Response: This rule is consistent with the general direction in SO 3376 that the BLM treat e-bikes similarly to traditional, non-motorized bicycles; however, SO 3376 is a policy document that was not ''intended to, and d[id] not create any right or benefit, substantive or procedural, enforceable at law or equity by a party against the United States.'' While SO 3376 directs the BLM to exclude all e-bikes from the definition of ORV, the BLM, in coordination with DOI, ultimately decided that it would be more appropriate for authorized officers to analyze site-specific factors and determine where Class 1, 2, and 3 e-bike use is appropriate on an individual basis. Because of potential resource impacts, user conflicts, and other relevant considerations, Class 1, 2, or 3 e-bike use may not be appropriate on certain public lands where traditional, non-motorized bicycles are allowed.

Comment: Commenters indicated that the rule would facilitate access to public lands for those with disabilities. Many commenters described their reliance on e-bikes and cited health conditions that prevent them from using traditional bikes. A number of commenters described their specific need for three-wheeled e-bikes, explaining that these bikes are necessary to provide balance for bike users who have a disability and want to access public lands.

Response: This rule is intended to facilitate increased recreational opportunities for all Americans, including those with physical limitations, and to encourage the enjoyment of lands and waters managed by the BLM.

Comment: Some commenters stated that the rule must adhere to all existing state and federal conservation easements and resource management plans.

Response: This rule does not amend or alter any existing land use plans, easements, or authorizations. Any decisions to allow e-bike use under this final rule will be made through the land use planning or implementation-level processes at the local level. The BLM recognizes that some uses of public lands may impact other uses. Authorized officers will consider conservation easements and other types of commitments made for use of lands when determining which non-motorized roads and trails are appropriate for e-bike use.

Comment: Some commenters asked the BLM to identify how the rulemaking and future implementation of the rule will comply with Section 7 of the Endangered Species Act.

Response: The rule is administrative and procedural in nature. It creates a process by which authorized officers may allow Class 1, 2, and 3 e-bikes on roads and trails that are available to traditional, non-motorized bicycle use. The rule does not change any current e-bike allowances on public lands. It will, therefore, have no impact on listed species or designated critical habitat. Any future changes will be made by authorized officers through site-specific land use planning or implementation-level decision-making processes that will comply with applicable law, including NEPA and the Endangered Species Act. As part of those future decision-making processes, the BLM will engage in consultation under Section 7 of the Endangered Species Act, as necessary.

Comment: Some commenters stated that the BLM must update or conduct a wilderness characteristics inventory in response to the proposed rule. Some commenters further stated that the BLM should not allow e-bike use on lands with wilderness characteristics.

Response: BLM policy provides that the agency will consider whether to update or conduct a wilderness characteristics inventory for the first time when, among other situations, the BLM is undertaking a land use planning process, has new information concerning resource conditions, or a project that may impact wilderness characteristics is undergoing NEPA analysis. This rule, which does not authorize any new e-bike use on BLM-managed public lands, will not impact wilderness characteristics. As a result, the BLM has not updated or conducted a wilderness characteristics inventory in response to the rule. The BLM, however, may update or conduct a wilderness characteristics inventory, where applicable, in conjunction with future land use planning or implementation-

level decision-making processes that consider authorizing Class 1, 2, or 3 e-bike use on non-motorized roads and trails.

Comment: Some commenters stated that e-bikes must be prohibited on national scenic or historic trails and in designated wilderness. Some commenters stated that e-bikes on trails connecting to national scenic or historic trails are likely to degrade the trail experience and pose safety concerns to hikers and equestrians using nationally designated trails. Some commenters stated that the BLM proposed rule is in direct conflict with Section 7(c) of the National Trails System Act, which states: The use of motorized vehicles by the general public along any national scenic trail shall be prohibited and nothing in this Act shall be construed as authorizing the use of motorized vehicles . . . .' ''

Response: The rule, which does not allow any new or additional Class 1, 2, or 3 e-bike use on BLM-managed public lands, will not allow e-bike use in designated wilderness or other areas where traditional, non-motorized bicycle use is not allowed. The authorized officer will determine, on a site-specific basis and through the NEPA process, if Class 1, 2, and 3 e-bike use is appropriate on roads and trails upon which traditional, non-motorized bicycles are allowed. In making this determination, authorized officers, who are presumed to act in accordance with applicable laws, will consider whether any statutory or regulatory provisions either prohibit or otherwise make e-bike use inappropriate on certain roads and trails.

Comment: One commenter stated that the rule does not recognize that non-motorized bicycles are a form of surface transportation use allowed in Conservation System Units (CSUs) designated by the 1980 Alaska National Interest Lands Conservation Act (ANILCA). This commenter further stated that the rule should recognize the statutory allowance in Section 1110(a) of ANILCA and allow e-bikes in these same CSUs.

Response: The BLM recognizes that ANILCA and its implementing regulations authorize the use of non-motorized surface transportation, including non-motorized bicycles, in CSUs unless such use is prohibited or otherwise restricted in accordance with the procedures set forth in 43 CFR 36.11(h). That rule does not apply to e-bikes, which have small electric motors and therefore do not qualify as non-motorized surface transportation. At this time, the BLM does not intend or have the information necessary to create a separate e-bike regulatory framework for Alaska. Instead, authorized officers will determine if Class 1, 2, and 3 e-bike use is appropriate on non-motorized roads and trails in CSUs on a site-specific basis in accordance with NEPA and other applicable laws. Authorized officers will consider traditional uses and travel to and from villages and homesites in making those determinations.

Comment: Some commenters expressed concern that the e-bike rule may remove future opportunities for coordination between the BLM and entities that have a partnership or agreement with the BLM such as a memorandum of understanding. Some commenters expressed concern that the rule is not supported under the BLM's National Recreation Strategy, which would undermine existing agreements created under the vision of the strategy.

Response: The rule will not affect the ability of the BLM to work with partners and stakeholders to achieve mutual objectives. Although BLM guidance and strategies may be updated to provide direction for e-bike regulation implementation, the BLM concludes that this rule is consistent and compatible with the National Recreation Strategy, which calls for the BLM to increase and improve collaboration with community networks of service providers, help communities produce greater well-being and socioeconomic health, and deliver outstanding recreation experiences to visitors while sustaining the distinctive character of public lands recreation settings.

Comment: Several commenters expressed concern that excluding e-bikes from the definition of ORV at 43 CFR 8340.0–5(a) would eliminate the requirement for the BLM to comply with certain environmental protections in the agency's ORV regulations and apply the designation criteria at 43 CFR 8342.1 when deciding where e-bike use is appropriate.

Response: For the reasons provided previously, the BLM has determined that, where certain criteria are met, authorized officers may determine that it is appropriate to exclude Class 1, 2, and 3 e-bikes from the definition of ORV at 43 CFR 8340.0–5(a). In such situations, the BLM may allow e-bikes to use roads and trails upon which traditional, non-motorized bicycles are allowed without formally applying the designation criteria at 43 CFR 8342.1. The agency, however, would still provide the public with opportunities to participate in agency decision-making processes in accordance with NEPA and other applicable laws, and the BLM would still consider resource impacts and user conflicts as part of the NEPA process that would support future site-specific decisions.

Implementation

Comment: Some commenters stated that the rule may present enforcement challenges. For example, commenters stated that e-bike use will facilitate illegal trail access by unauthorized vehicles and that the BLM will not be able to enforce the requirement that the throttle on Class 2 e-bikes not be used exclusively to propel the e-bike for extended periods of time.

Response: The BLM acknowledges that implementation of this rule poses certain enforcement challenges; however, those challenges are not unique. They regularly arise in the context of enforcing laws that govern recreational use of public lands. For example, the regulations governing use of ORVs at 43 CFR 8341.1 prohibit the operation of ORVs in violation of state laws and regulations relating to use, standards, registration, operation, and inspection of ORVs and without a valid state operator's license or learner's permit. Those same regulations also prohibit operation of an ORV in a reckless, careless, or negligent manner, while under the influence of alcohol, narcotics, or dangerous drugs, and in a manner that causes, or is likely to cause, significant, undue damage to or disturbance of resources and other uses of the public lands. Determining when a violation of these regulations occurs can be fact-specific, requiring the exercise of specialized judgment on the part of law enforcement officers. Similarly, determining that the public is complying with aspects of this rule, such as the requirement that, to be excluded from the definition of ORV, a Class 2 e-bike cannot be ridden for an extended period of time using just its throttle, will involve the exercise of specialized skill, training, and judgment by law enforcement officers. Based on their experience enforcing other regulations that condition how the public recreates on public lands, BLM law enforcement officers have the expertise necessary to properly exercise their discretion to enforce the requirements of this rule in a reasonable manner that ensures protection of public health, safety, and resources and users of the public lands. Moreover, the agency believes that enforcement challenges posed by this requirement are warranted given the requirement's potential benefits to affected public land resources and users. In particular, the requirement prohibiting throttle use on Class 2 e-bikes for extended periods of time will allow riders to benefit from

the throttle function for limited durations, such as when first starting out on an incline, while ensuring that Class 2 e-bikes will generally be ridden, and will therefore impact natural resources, in a manner similar to Class 1 e-bikes.

Comment: Some commenters stated that e-bikes can easily be modified to exceed horsepower and speed restrictions.

Response: E-bikes can be modified; however, if an e-bike is modified in such a manner that it does not qualify as a Class 1, 2, or 3 e-bike, it will not be eligible for exclusion from the definition of ORV and will continue to be regulated in accordance with the BLM's ORV regulations at 43 CFR part 8340.

Comment: Some commenters suggest that the BLM should require users of e-bikes who tamper with or modify an e-bike, changing the speed capability, to replace the manufacturer's classification label.

Response: The BLM does not require any sort of label on e-bikes and will not impose a requirement to remove or modify the label if the e-bike is modified. If an e-bike is modified after purchase, the e-bike may not qualify as a Class 1, 2, or 3 e-bike and would therefore be managed as an ORV in accordance with the regulations at 43 CFR part 8340.

Comment: Some commenters requested clarification on the appropriate next steps for implementation.

Response: The specific steps that the BLM will take to implement this rule are beyond the scope of this rulemaking process. After publication of this final rule, the BLM may determine that it is necessary to update agency policy, including manuals, handbooks, and other guidance materials, to comply with the new rule.

Comment: Some commenters stated that the introduction of e-bikes will require a revision of existing sign standards to clearly identify where e-bikes are allowed, and further, which classes are allowed. One commenter recommended that the BLM maintain a trail sign standard with allowable use demarcations to depict traditional bicycles and e-bikes independently.

Response: The BLM agrees that the successful introduction of e-bikes onto public lands depends on clear and consistent communication to the public about where e-bikes are allowed and, further, which classes are allowed. The BLM is working with the other land management agencies within DOI to establish standard signs for e-bikes. The goal of this effort is to create a consistent visual framework indicating where e-bikes are allowed on public lands managed by DOI.

Comment: Some commenters requested a timeline for future NEPA analyses to be conducted by field offices.

Response: Under the final rule, the authorized officer may allow Class 1, 2, or 3 e-bikes to use non-motorized roads and trails through a site-specific land use planning or implementation-level decision. The specific timing of future site-specific decisions and supporting NEPA processes will depend on a number of variables, such as budget, resources, agency priorities, and officer discretion.

Comment: Some commenters stated that authorized officers would implement the rule inconsistently, which would result in public confusion.

Response: The rule provides authorized officers flexibility to determine where e-bike use is appropriate on a case-by-case basis. The BLM may issue subsequent guidance to help achieve consistent implementation of the rule across the agency.

Comment: Commenters stated that e-bike access on non-motorized trails would exacerbate erosion, disturb wildlife habitat through trail-widening and destruction of vegetation adjacent to trails, impact wildlife through disturbance and collisions, create a safety risk to equestrians and pedestrians (potential collisions, startling horses), and that speed limits should be imposed on trails. Commenters also stated that facilitating backcountry access to less-experienced e-bike users may create unsafe conditions for these users, would contribute to overcrowding of trails and parking areas, and generate noise that would disturb wildlife and other recreationists. Conversely, other commenters stated that e bikes are very quiet, which creates an added safety risk to wildlife, equestrians, and pedestrians.

Response: The BLM reviewed a substantial number of studies and reports, including those submitted by the public, to better understand how site-specific implementation of the rule may impact public land resources and users. That literature indicates that many people hold misconceptions about what constitutes an e-bike, and that these misconceptions foster fears and concerns about trail conflicts and access that typically abate as people gain greater familiarity with e-bikes. The literature indicates that riders of e-bikes and non-motorized bicycles exhibit similar safety behavior and have similar wrong-way, stop sign, and traffic signal compliance. While there is evidence that e-bikes travel faster than non-motorized bicycles in some situations, and slower than non-motorized bicycles in others, the literature generally indicates that the two are often ridden at similar speeds, and that average riding speed is determined largely by cultural norms, law enforcement, and physical infrastructure. The literature also indicates that all forms of recreation may adversely impact wildlife habitat, both motorized and nonmotorized recreation can result in habitat compression, and all-terrain vehicle use has greater adverse impacts on ungulate behavior than biking, hiking, and horseback riding. There is little research to suggest, however, that e-bikes have greater impacts on wildlife than non-motorized bicycles. Finally, the literature indicates that impacts from Class 1 e-bikes and traditional, non-motorized mountain bikes were not significantly different, while motorcycles led to much greater soil displacement and erosion. In fact, an emerging body of research suggests that the degree to which recreational uses impact soils, water quality, and vegetation depends more on trail design and construction than the specific types of activities. In sum, the literature indicates that the additional e-bike use that authorized officers may allow under the rule is unlikely to have significant adverse impacts on public land resources or users and that the impacts that may occur are likely to be similar to those already being caused by non-motorized bicycle use.

With that said, the impacts associated with e-bike use will largely depend on site specificity, including the geography, wildlife, habitat, and uses associated with individual roads and trails. The BLM has designed this rule to account for that variability. Rather than attempting to apply blanket allowances or prohibitions on e-bike use, the rule provides authorized officers with the discretion to determine, based on local knowledge and in accordance with NEPA and other applicable laws, on which specific roads and trails e-bike use may be appropriate. In making these determinations, authorized officers will consider impacts to public land resources and other recreational uses, as appropriate.

Discussion of the Final Rule

Existing BLM regulations do not explicitly address the use of e-bikes on public lands. Under the BLM's current Travel and Transportation Management Manual (MS–1626), however, e-bikes are managed as ORVs, as defined at 43 CFR 8340.0–5(a), and are allowed only in those areas and on those roads or

trails that are designated as ''ORV Open'' or ''ORV Limited''. Additionally, e-bikes currently must be operated in accordance with the regulations governing ORVs at 43 CFR 8341.1.

Under the final rule, authorized officers may allow, through subsequent decision-making, Class 1, 2, and/or 3 e-bikes whose motor is not being used exclusively to propel the e-bike for an extended period of time on roads and trails upon which mechanized, non-motorized use is allowed. These authorizations must be included in a land-use planning or implementation-level decision. Such decisions must be made in accordance with applicable legal requirements, including NEPA. Under the final rule, where an authorized officer determines that Class 1, 2, and 3 e-bikes should be allowed on roads and trails upon which mechanized, non-motorized use is allowed, such e-bikes would be excluded from the definition of ORV at 43 CFR 8340.0–5(a) and would not be subject to the regulatory requirements in 43 CFR part 8340. E-bikes excluded from the definition of ORV at 43 CFR 8340.0–5(a) would be afforded all the rights and privileges, and be subject to all of the duties, of a non-motorized bicycle. Under the final rule, authorized officers may not allow e-bikes on roads and trails upon which mechanized, non-motorized bicycles are prohibited.

A primary objective of the BLM's travel and transportation management is to establish a long-term, sustainable, multimodal travel network and transportation system that addresses the need for public, authorized, and administrative access to and across BLM-managed lands and related waters. Travel management planning occurs as part of regional or site-specific land use and implementation decisions. Such decisions typically involve public participation and must comply with NEPA. Travel management is an ongoing and dynamic process through which roads and trails for different modes of travel can be added and/or subtracted from the available travel system at any time through the appropriate planning and NEPA processes. These changes may be necessary based on access needs, resource objectives, and impacts to natural resources or the human environment. Any such decisions are made through an amendment to the existing land use plan, or through implementation level actions for a travel management plan.

Under current land use plans and travel management plans, the use of ORVs (and, therefore, e-bikes) is allowed on the majority of roads and trails on BLM-administered public lands. The final rule will have no effect on the use of e-bikes and other motorized vehicles on such roads and trails; e-bikes, which the BLM currently manages as ORVs, and other motorized vehicles could continue to use roads and trails upon which ORV use is currently allowed. The final rule, however, by providing authorized officers discretion to allow Class 1, 2, and 3 e-bike use on roads and trails upon which mechanized, non-motorized bicycle use is allowed, has the potential to facilitate an increase in recreational opportunities for all Americans, especially those with physical limitations, and encourage the enjoyment of the DOI-managed lands and waters.

The BLM intends for the final rule to facilitate an increase in e-bike ridership on public lands. The BLM recognizes that the appeal of many BLM-managed roads and trails to cyclists is the opportunity to experience a challenging road or trail that may have inherently limited ridership. Under the final rule, the use of an e-bike could cause increased ridership on these roads or trails. To address site-specific issues, the BLM will consider the environmental impacts from the use of e-bikes through a subsequent analysis. E-bike use must conform to governing land use plans, including conditions of use that may be specific to an area.

§ 8340.0–5 Definitions

The rule adds a new definition for e-bikes and defines three classifications of e-bikes (see new paragraph (j) of this section). The rule also excludes Class 1, 2, and 3 e-bikes from the definition of ORV, pursuant to a subsequent decision by an authorized officer, where specific criteria are met (see new paragraph (a)(5) of this section).

Paragraph (a) of this section defines an ORV as ''any motorized vehicle capable of, or designed for, travel on or immediately over land, water, or other natural terrain . . .'' and includes 5 exceptions. The rule moves existing paragraph (a)(5) of this section to (a)(6) and adds a new (a)(5) that addresses e-bikes. Under paragraph (a)(5) of this section, a Class 1, 2, or 3 e-bike would be excluded from the definition of ORV if: (1) The e-bike is being used on roads and trails where mechanized, non-motorized use is allowed; (2) the e-bike is not being used in a manner where the motor is being used exclusively to propel the e-bike for an extended period of time; and (3) an authorized officer has expressly determined, as part of a land-use planning or implementation-level decision, that e-bikes should be treated the same as non-motorized bicycles on such roads and trails.

Notably, Class 2 e-bikes are capable of propulsion without pedaling. Under the final rule, Class 2 e-bikes operated in throttle-only actuation (*i.e.,* relying only on the throttle without pedal assistance) for an extended period of time are not eligible to be excluded from the definition of ORV at 43 CFR 8340.0–5(a) and will continue to be regulated as ORVs.

The BLM received several comments questioning the wisdom and enforceability of the requirement in the proposed rule that e-bikes must never be used in a manner where the motor is exclusively propelling the bicycle in order to be excluded from the definition of ORV. These commenters pointed out that regular bicycles are often ridden for periods of time without pedaling, for example when a rider is coasting downhill. Other commenters suggested that the BLM remove the clause stating that the bike's ''motorized features are being used to assist human propulsion,'' while other comments suggested removing ''that are not being used in a manner where the motor is being used exclusively to propel the e-bike.'' In response to these comments, the BLM revised this paragraph to specify that an e-bike is eligible to be excluded from the definition of ORV so long as the rider is not relying exclusively on the motor to propel the bike ''for an extended period of time.'' The intent of this rule is to ensure e-bikes are used in a manner consistent with traditional, non-motorized bicycles. The revised text helps accomplish this goal by making clear that, like the rider of a traditional bicycle, an e-bike rider does not have to pedal continuously for the e-bike to be excluded from the definition of ORV. Relying exclusively on a Class 2 e-bike's throttle for an extended period of time, however, is inconsistent with the use of a non-motorized bike, and e-bikes ridden in such a manner will be considered ORVs under the BLM's regulations. The BLM will coordinate with its partners during implementation of this rule to improve education and awareness of this requirement.

Some commenters recommended that the BLM revise paragraph (a)(5) to additionally specify that an e-bike is eligible for exclusion from the definition of ORV only where it ''is not being used on any designated National Scenic Trail, except on segments where motorized ORV use is authorized.'' The suggested addition is unnecessary. Authorized officers will determine, on a site-specific basis and through the NEPA process, if Class 1, 2, and 3 e-bike use is appropriate on roads and trails upon

which traditional, non-motorized bicycles are allowed. In making that determination, authorized officers will consider whether any applicable statutory or regulatory provisions, such as the National Trails System Act, either prohibit or otherwise make e-bike use inappropriate on certain roads and trails.

Another commenter suggested adding language to paragraph (a)(5)(iii) specifying that e-bikes excluded from the definition of ORV and allowed to use non-motorized roads and trails ''are independent of'' non-motorized bicycles.'' This addition is unnecessary. The rule draws a clear distinction between e-bikes and non-motorized bicycles, and an authorized officers determination that e-bikes, or certain classes of e-bikes, may use certain non-motorized roads or trails will not limit the BLM's ability to continue to manage e-bikes separately from non-motorized bicycles, where necessary.

A commenter suggested adding language to paragraph (a)(5) specifying that e-bikes that are excluded from the definition of ORV would be operated and managed under the designation procedures of 43 CFR 8342.2. The BLM has not incorporated this suggestion into the final rule. The designation procedures at 43 CFR 8342.2 are specific to the operation and management of ORVs and apply to actions, such as the creation of area designations in land use plans, which would be inapplicable to the management of e-bikes that are excluded from the definition of ORV. Although the BLM has not incorporated this suggestion into the final rule, the agency can still apply certain aspects of section 8342.2 into the management of e-bikes, where appropriate. For example, NEPA and other laws providing for public participation can provide interested user groups, Federal, State, county and local agencies, local landowners, and other parties opportunities to participate in future decision-making processes concerning where e-bike use is appropriate. Similarly, the BLM will retain the ability to identify non-motorized road and trails that are available for e-bike use, as appropriate.

Finally, one commenter suggested the deletion of paragraph (a)(5)(iii), and another commenter suggested deleting paragraph (a)(a), (ii), and (iii). The BLM did not accept either of these suggestions. Adopting them would make the rule self-executing and result in Class 1, 2, and 3 e-bikes that satisfy the criteria at (a)(5)(i) and (ii) being automatically excluded from the definition of ORV. The BLM, however, recognizes that Class 1, 2, and 3 e-bike use may not be appropriate on all roads and trails on which non-motorized, traditional bicycles are allowed, and therefore has concluded that authorized officers should determine where e-bike use is appropriate on a site-specific basis.

New paragraph (j) of this section includes the definition for electric bicycles, or e-bikes. E-bikes may have 2 or 3 wheels and must have fully operable pedals. The electric motor for an e-bike may not exceed 750 watts (one horsepower). E-bikes must fall into one of three classes, as described in paragraphs (j)(1) through (3) of this section.

Paragraph (j)(1) describes Class 1 e-bikes, which are equipped with a motor that only provides assistance when the rider is pedaling and ceases to provide assistance when the speed of the bicycle reaches 20 miles per hour.

Paragraph (j)(2) of this section describes Class 2 e-bikes, which have a motor that, in addition to pedal assistance, can propel the bicycle without pedaling. This propulsion and pedal assistance ceases to provide assistance when the speed of the bicycle reaches 20 miles per hour.

Paragraph (j)(3) of this section describes Class 3 e-bikes, which have a motor that only provides assistance when the rider is pedaling and ceases to provide assistance when the speed of the bicycle reaches 28 miles per hour.

The definition of e-bike in paragraph (j), including the three classes of e-bikes included in that definition, is consistent with the other DOI agencies that are also revising their regulations to address e-bike use. Having the same definition as other DOI agencies will facilitate consistent implementation of e-bike regulations across public lands administered by the DOI and aid coordination with other local, State, and Federal agencies.

One commenter suggested that language be added to the definition of e-bike in paragraph (j) stating'' ''[E]-bikes shall be allowed where other types of bicycles are allowed; and prohibited where other types of bicycles are not allowed. They are not considered ORVs for the purposes of this Chapter.'' The BLM did not adopt this change, as it would result in a self-executing rule that fails to acknowledge that Class 1, 2, and 3 e-bike use may not be appropriate on all roads and trails on which non-motorized, traditional bicycles are allowed. Under the final rule, authorized officers will determine whether to allow e-bikes on certain roads and trails on a site-specific basis.

Some commenters requested that the BLM revise paragraph (j) to require an e-bike to be equipped with a seat or saddle for the rider. As stated previously, the BLM is not adding a requirement that an e-bike be equipped with a seat or saddle because some bicycles, such as trial bikes, may not have a seat, and the BLM does not think it is necessary to categorically prohibit those types of e-bikes on non-motorized roads and trails. By requiring e-bikes to have operable pedals, the definition ensures that other low-powered electric vehicles, such as scooters and skateboards, will not fall within the scope of this rule.

One commenter suggested changing the portion of the current Class 2 e-bike definition stating ''. . . and is not capable of providing assistance when the bicycle . . .'' to ''. . . and is not capable of such propulsion when the bicycle . . .''. The BLM did not make this change as there is no substantive difference between the language and changing the Class 2 definition in the manner suggested by the commenter would create inconsistencies with the Class 1 and 3 definitions.

One commenter suggested adding to paragraph (j) that ''no Class 1 e-bike allowed to be operated on a non-motorized road or trail on BLM public lands shall be modified to exceed the 20 mph limit and no Class 3 e-bike allowed to be operated on a non-motorized road or trail on BLM public lands shall be modified to exceed the 28 mph limit.'' The suggested addition is unnecessary. If a modified e-bike falls outside the definition of the three classes described in this rule, it will be managed as an ORV and will be prohibited on non-motorized roads and trails.

Some commenters suggested adding language to paragraph (j) specifying that ''Devices with electric motors of 750 watts (1 hp) or more of power and not included as Class 1, Class 2 or Class 3 in the classification system above, or used in a manner prohibited by the regulations should be managed as motor vehicles under 43 CFR Part 8340.'' The BLM has not made this change, as it is clear based on the current text of the rule that e-bikes that do not fall within the definition of e-bike in paragraph (j) and do not satisfy the criteria in paragraph (a)(5) remain ORVs and will be regulated as such.

Subpart 8342—Designation of Areas and Trails

§ 8342.2 Designation Procedures

The rule adds a new paragraph (d) to 43 CFR 8342.2 that addresses how the BLM will issue decisions to authorize the use of e-bikes on public lands. It provides authorized officers with

discretion to determine whether Class 1, 2, and 3 e-bikes (or only certain classes of e-bikes) are appropriate on roads or trails upon which mechanized, non-motorized use is allowed. Under new paragraph (d), e-bikes being used on roads and trails where mechanized, non-motorized use is allowed pursuant to a decision by an authorized officer will be given the same rights and privileges of a traditional, non-motorized bicycle and will be subject to all of the duties of a traditional, non-motorized bicycle. While the BLM intends for this rule to facilitate increased accessibility to public lands, e-bikes will not be given special access beyond what traditional, non-motorized bicycles are allowed. For example, e-bikes will not be allowed on roads or trails or in areas where traditional, non-motorized bicycle travel is prohibited, such as in designated wilderness.

As originally proposed, this paragraph stated that authorized officers ''should generally allow'' e-bike on roads and trails on which traditional, non-motorized bicycles are allowed. Some commenters suggested that ''generally'' should be deleted and the rule should be revised to state that the BLM ''should allow'' e-bikes on roads and trails open to non-motorized bicycles. By comparison, other commenters expressed concern that the proposed text directed field managers to permit e-bikes on non-motorized trails and created a rebuttable presumption that would bias future NEPA processes. In response to these comments, the BLM has revised this paragraph to provide that authorized officers ''may'' allow e-bikes on certain roads and trails and removed the statement ''unless the authorized officer determines that e-bike use would be inappropriate on such roads or trails,'' which described when the authorized officer would not allow e-bike use. While the BLM wants to encourage the use of e-bikes on public lands, the agency feels strongly that field personnel are in the best position to determine where and when e-bike us is appropriate. The BLM has therefore sought to clarify that authorized officers will make unbiased, site-specific decisions that account for potential resource impacts and user conflicts. Such decisions will comply with NEPA and other relevant statutory or regulatory requirements, and outcomes will not be predetermined.

One commenter suggested that the BLM replace the term ''mechanical'' with ''motorized'' in paragraph (d). This change was not accepted, as it would limit the rule's application to traditional, non-motorized bicycles and be inconsistent with the BLM's intention of facilitating greater e-bike access on public lands.

Some commenters suggested that that the BLM add two new provisions to this section. First, that e-bikes may be ridden on streets, highways, or roads that are open to motorized vehicles, including the shoulder or bicycle lane, and second, that authorized officers should generally allow, as part of a land-use planning or implementation-level decision, e-bikes to be ridden on non-motorized bicycle paths with improved surfaces, such as concrete, asphalt, or crushed stone. The BLM has adopted neither suggestion. The BLM has declined to adopt the first suggestion because under the rule, e-bikes—both those excluded from the definition of ORV, and those that are not—can generally ride on BLM-managed streets, highways, or roads that are open to ORVs. There may be situations, however, where bicycle use is inappropriate or potentially unsafe on certain roads that are open to ORVs. It is therefore important that authorized officers retain discretion to prohibit both e-bike and traditional, non-motorized bicycle use on certain roads open to ORVs, where appropriate. The BLM has declined to adopt the second suggestion for similar reasons. Rather than suggesting that Class 1, 2, and 3 e-bikes should generally be allowed on paths with improved surfaces, the BLM believes that authorized officer need full discretion to determine where e-bike use is appropriate on a site-specific basis.

The BLM received several comments expressing concern or confusion about whether authorized officers could allow only certain classes of e-bikes on a road or trail. To clarify that authorized officers do have discretion to make this distinction, the BLM has revised paragraph 8342.2(d) to provide that the authorized officer may approve the use of ''e-bikes, or certain classes of e-bikes,'' on a particular road or trail.

One commenter suggested that the BLM add text to this section stating that authorized officers may impose specific restrictions and limitations on e-bike use, or may close any road, trail, or portion thereof to e-bike use to address public health and safety concerns, natural resource protection, and other management activities and objectives. While the BLM agrees that flexibility in the management of e-bikes is important, revising the text in accordance with this suggestion is unnecessary. The rule provides authorized officer with discretion to allow or disallow e-bike use on roads and trails that are open to traditional, non-motorized bicycles. In making those determinations, authorized officers may impose limitations and restrictions on e-bike use—such as limiting certain roads and trails to only certain classes of e-bikes, or limiting e-bike use to certain times of the year—to minimize impacts on public land resources and user conflicts. Authorized officers also have discretion to make future adjustments to those limitations and restrictions, either by amending previous decisions concerning e-bikes or imposing closures or restrictions pursuant to applicable authority.

A commenter suggested that this section should direct authorized officers to designate all public roads and trails as either open, limited, or closed to Class 1, 2, and 3 e-bikes to address what it perceived as a ''predecisional undertone'' caused by the direction in the proposed rule that authorized officers ''should generally allow'' e-bikes on roads and trails open to non-motorized bicycles. The BLM has declined to adopt this suggestion. As discussed above, the BLM has revised this section to clarify that authorized officers ''may allow'' e-bikes on roads and trails open to traditional, non-motorized bicycles, where appropriate, in accordance with NEPA and other applicable laws.

Another commenter suggested that the BLM add criteria that the authorized officer should consider when determining if Class 1, 2, and 3 e-bike use would be appropriate on non-motorized roads or trails, including: (1) The speed and characteristics of the different classes of e-bikes; (2) the likely effect of riding e-bikes or a particular class of e-bike on cultural or natural resources; and (3) other road and trail users. The commenter also suggested updating this section to provide that e-bike users shall be afforded all the rights and privileges and be subject to ''only'' rather than ''all of'' the duties of users of non-motorized bicycles. The BLM has not adopted these suggestions. There are many considerations that authorized officers may take into account when determining where e-bike use is appropriate, including the items suggested by the commenter. It is neither possible nor necessary to account for all these considerations in the rule, which provides authorized officers with wide discretion to consider any and all criteria that may be appropriate to individual site-specific decisions. As discussed previously, the BLM may develop subsequent guidance to support implementation of the rule.

Finally, a commenter suggested that the BLM add additional language to paragraph (d) prohibiting Class 2 and 3 e-bikes on trails limited to mechanized,

non-motorized use. The comment also suggested prohibiting any three-wheeled e-bike with a combined tire tread width of 15 inches or more on single track trails limited to mechanized, non-motorized use. The commenter indicated that these changes are necessary to limit user conflicts and minimize damage to soil and vegetation. The BLM disagrees. The rule provides authorized officers with sufficient discretion to utilize local knowledge to determine whether e-bikes, or only certain types or classes of e-bikes, are appropriate on individual roads and trails that are limited to mechanized, non-motorized use. In light of this discretion, it is unnecessary to categorically prohibit certain classes and types of e-bikes on certain types of roads and trails through this rule.

III. Procedural Matters

Regulatory Planning and Review (Executive Orders 12866 and 13563)

Executive Order 12866 provides that the Office of Information and Regulatory Affairs in the Office of Management and Budget will review all significant rules. The Office of Information and Regulatory Affairs has determined that the rule is not a significant regulatory action as defined by Executive Order 12866.

Executive Order 13563 reaffirms the principles of E.O. 12866 while calling for improvements in the nation's regulatory system to promote predictability, to reduce uncertainty, and to use the best, most innovative, and least burdensome tools for achieving regulatory ends. The executive order directs agencies to consider regulatory approaches that reduce burdens and maintain flexibility and freedom of choice for the public where these approaches are relevant, feasible, and consistent with regulatory objectives. E.O. 13563 emphasizes further that regulations must be based on the best available science and that the rulemaking process must allow for public participation and an open exchange of ideas. We have developed this rule in a manner consistent with these requirements.

The rule addresses how the BLM will allow visitors to operate e-bikes on public lands and directs the BLM to specifically address e-bike usage in future land-use planning or implementation-level decisions. The rule amends 43 CFR 8340.0–5 to define Class 1, 2, and 3 of e-bikes. The rule provides authorized officers the discretion to allow, through subsequent decision-making in a land use planning or implementation-level decision, Class 1, 2, and 3 e-bikes on roads and trails upon which mechanized, non-motorized use is allowed, where appropriate. Where certain criteria are met, the rule excludes Class 1, 2, and 3 e-bikes from the definition of ORV at 43 CFR 8340.0–5(a).

This rule is not self-executing. The rule, in and of itself, does not change existing allowances for e-bike usage on BLM-administered public lands. It neither allows e-bikes on roads and trails that are currently closed to ORVs but open to mechanized, non-motorized bicycle use, nor affects the use of e-bikes and other motorized vehicles on roads and trails where ORV use is currently allowed. While the BLM intends for this rule to facilitate increased accessibility to public lands, e-bikes will not be given special access beyond what traditional, non-motorized bicycles are allowed.

The BLM reviewed the requirements of the rule and determined that it does not adversely affect in a material way the economy, a sector of the economy, productivity, competition, jobs, the environment, public health or safety, or State, local, or tribal governments or communities. For more detailed information, see the Economic and Threshold analysis prepared for this rule. This analysis has been posted in the docket for the rule on the Federal eRulemaking Portal: *https://www.regulations.gov.* In the Searchbox, enter ''RIN 1004–AE72'', click the ''Search'' button, open the Docket Folder, and look under Supporting Documents.

Reducing Regulation and Controlling Regulatory Costs (E.O. 13771)

The BLM has complied with E.O. 13771 and the Office of Management and Budget implementation guidance for that order.[1] The rule is not a significant regulation action as defined by E.O. 12866 or a significant guidance document. Therefore, the rule is not an ''E.O. 13771 regulatory action,'' as defined by Office of Management and Budget guidance. As such, the rule is not subject to the requirements of E.O. 13771.

[1] Executive Office of the President, Office of Management and Budget, Executive Order 13771, January 30, 2017. 82 FR 9339. Available at *https://www.gpo.gov/fdsys/pkg/FR-2017-02-03/pdf/2017-02451.pdf.*

See also, OMB Memorandum ''Regulatory Policy Officers at Executive Departments and Agencies Managing and Executive Directors of Certain Agencies and Commissions,'' April 5, 2017. Available at *https://www.whitehouse.gov/sites/whitehouse.gov/files/omb/memoranda/2017/M-17-21-OMB.pdf.*

Regulatory Flexibility Act

This rule will not have a significant economic effect on a substantial number of small entities under the Regulatory Flexibility Act (RFA) (5 U.S.C. 601 *et seq.*). This certification is based on information contained in the Economic and Threshold analysis prepared for this rule. Therefore, a final Regulatory Flexibility Analysis is not required, and a Small Entity Compliance Guide is not required. This analysis has been posted in the docket for the rule on the Federal eRulemaking Portal: *https://www.regulations.gov.* In the Searchbox, enter ''RIN 1004–AE72'', click the ''Search'' button, open the Docket Folder, and look under Supporting Documents.

Small Business Regulatory Enforcement Fairness Act (SBREFA)

This rule is not a major rule under 5 U.S.C. 804(2), the Small Business Regulatory Enforcement Fairness Act. This rule:

(a) Does not have an annual effect on the economy of $100 million or more. The rule will not have a direct and quantifiable economic impact but is intended to increase recreational opportunities on public lands.

(b) Will not cause a major increase in costs or prices for consumers, individual industries, Federal, State, or local government agencies, or geographic regions. This rule adds a definition for e-bikes, indicates that the BLM should consider how they are managed on public lands in future land-use planning and implementation-level decisions, and excludes e-bikes from the definition of ORV when certain criteria are met.

(c) Does not have significant adverse effects on competition, employment, investment, productivity, innovation, or the ability of US-based enterprises to compete with foreign-based enterprises. The BLM expects this rule to facilitate additional recreational opportunities on public lands, which would be beneficial to local economies on impacted public lands.

Unfunded Mandates Reform Act

This rule does not impose an unfunded mandate on State, local, or tribal governments, or the private sector of more than $100 million per year. The rule does not have a significant or unique effect on State, local, or tribal governments or the private sector. The BLM will coordinate with impacted entities, as necessary and appropriate, when it makes land use planning decisions regarding the use of e-bikes on public lands in a particular area. A

statement containing the information required by the Unfunded Mandates Reform Act (2 U.S.C. 1531 *et seq.*) is not required.

Takings (E.O. 12630)

This rule does not affect a taking of private property or otherwise have taking implications under E.O. 12630. This rule will only impact public lands and how they are managed by the BLM regarding the use of e-bikes. A takings implication assessment is not required.

Federalism (E.O. 13132)

Under the criteria in section 1 of E.O. 13132, this rule does not have sufficient federalism implications to warrant the preparation of a federalism summary impact statement. This rule will not have substantial direct effects on the States, on the relationship between the national government and the States, or on the distribution of power and responsibilities among the various levels of government. The BLM will coordinate with State and local governments, as appropriate, when making future planning and implementation level decisions under this rule regarding the use of e-bikes on public lands. A federalism summary impact statement is not required.

Civil Justice Reform (E.O. 12988)

This rule complies with the requirements of E.O. 12988. Specifically, this rule:

(a) Meets the criteria of section 3(a) requiring that all regulations be reviewed to eliminate errors and ambiguity and be written to minimize litigation; and

(b) Meets the criteria of section 3(b)(2) requiring that all regulations be written in clear language and contain clear legal standards.

Consultation With Indian Tribes (E.O. 13175 and Departmental Policy)

The DOI strives to strengthen its government-to-government relationship with Indian tribes through a commitment to consultation with Indian tribes and recognition of their right to self-governance and tribal sovereignty. We have evaluated this rule under the Department's consultation policy and under the criteria in E.O. 13175 and have determined that it has no substantial direct effects on federally recognized Indian tribes and that consultation under the Department's tribal consultation policy is not required. This rulemaking is an administrative change that directs the BLM to address e-bike use in future land-use planning or implementation-level decisions. The rule does not change existing allowances for e-bike usage on BLM-administered public lands. The rulemaking does not commit the agency to undertake any specific action, and the authorized officers retain the discretion to authorize e-bike use where appropriate. Tribal consultation will occur as required on a project-specific basis as potential e-bike opportunities are considered by the BLM in the future.

Paperwork Reduction Act (44 U.S.C. 3501 et seq.)

This rule does not contain information collection requirements, and a submission to the Office of Management and Budget under the Paperwork Reduction Act is not required.

National Environmental Policy Act

The BLM does not believe that this rule constitutes a major Federal action significantly affecting the quality of the human environment. A detailed statement under the National Environmental Policy Act of 1969 (NEPA) is not required because the rule, as proposed, is categorically excluded from further analysis or documentation under NEPA in accordance with 43 CFR 46.210(i), which applies to:

Policies, directives, regulations, and guidelines that are of an administrative, financial, legal, technical, or procedural nature; or whose environmental effects are too broad, speculative, or conjectural to lend themselves to meaningful analysis and will later be subject to the NEPA process, either collectively or case-by-case basis.

The BLM received several comments asserting that the agency cannot rely on the categorical exclusion at 43 CFR 46.210(i) to comply with NEPA because the rule is not ''of an administrative, financial, legal, technical, or procedural nature,'' and because its environmental effects are not ''too broad, speculative, or conjectural to lend themselves to meaningful analysis.'' Commenters also stated that extraordinary circumstances under 43 CFR 46.215 are applicable to this rulemaking, thereby requiring additional analysis. Commenters state that the categorical exclusion should not apply because of unique risks presented by e-bikes.

As previously discussed, this rule does not change the existing allowances for e-bike usage on public lands and will have no direct environmental effects. It will neither allow e-bikes on roads and trails that are currently closed to ORVs but open to mechanized, non-motorized bicycle use, nor affect the use of e-bikes and other motorized vehicles on roads and trails where ORV use is currently allowed. The rule will (i) add a new definition for e-bikes; (ii) direct the BLM to specifically address e-bike usage in future land-use planning or implementation-level decisions; and (iii) set forth specific criteria for when e-bikes may be excluded from the definition of ORV at 43 CFR 8340.0–5(a). Before the public could use e-bikes on any roads or trails that are not currently open to ORV use, an authorized officer of the BLM must issue a land-use planning or implementation-level decision allowing for such use. That decision must comply with applicable law, including NEPA. As such, the final rule is administrative and procedural in nature. Moreover, the environmental effects associated with future land-use planning or implementation-level decisions that do allow increased e-bike use are too speculative or conjectural at this time to lend themselves to meaningful analysis. Any environmental effects associated with future decisions will be subject to the NEPA process on a case-by-case basis. The BLM has also determined that the rule does not involve any of the extraordinary circumstances listed in 43 CFR 46.215 that require further analysis under NEPA.

Effects on the Energy Supply (E.O. 13211)

This rule is not a significant energy action under the definition in E.O. 13211. This rule will not directly impact any allowed uses on public lands, as it only generally directs the BLM to consider allowing their use on existing trails and roads and in those areas where traditional bicycles are allowed. A Statement of Energy Effects is not required.

Author

The principal author(s) of this rule are Evan Glenn and David Jeppesen, Recreation and Visitor Services Division; Rebecca Moore, Branch of Decision Support; Scott Whitesides and Sandra McGinnis, Branch of Planning and NEPA; Britta Nelson, National Conservation Lands Division; Charles Yudson, Division of Regulatory Affairs; assisted by the Office of the Solicitor.

David L. Bernhardt,

Secretary, U.S. Department of the Interior.

List of Subjects in 43 CFR Part 8340

Public lands, Recreation and recreation areas, Traffic regulations.

For the reasons set out in the discussion of the rule, the Bureau of Land Management proposes to amend 43 CFR part 8340 as follows:

PART 8340—OFF-ROAD VEHICLES

■ 1. The authority citation for part 8340 continues to read as follows:

Authority: 43 U.S.C. 1201, 43 U.S.C. 315a, 16 U.S.C. 1531 *et seq.,* 16 U.S.C. 1281c, 16 U.S.C. 670 *et seq.,* 16 U.S.C. 460l–6a, 16 U.S.C. 1241 *et seq.,* and 43 U.S.C. 1701 *et seq.*

Subpart 8340—General

■ 2. Revise § 8340.0–5 to read as follows:

§ 8340.0–5 Definitions.

As used in this part:

(a) *Off-road vehicle* means any motorized vehicle capable of, or designed for, travel on or immediately over land, water, or other natural terrain, excluding:

(1) Any nonamphibious registered motorboat;

(2) Any military, fire, emergency, or law enforcement vehicle while being used for emergency purposes;

(3) Any vehicle whose use is expressly authorized by the authorized officer, or otherwise officially approved;

(4) Vehicles in official use;

(5) E-bikes, as defined in paragraph (j) of this section:

(i) While being used on roads and trails upon which mechanized, non-motorized use is allowed;

(ii) That are being used in a manner where the motor is not exclusively propelling the e-bike for an extended period of time; and

(iii) Where the authorized officer has expressly determined, as part of a land-use planning or implementation-level decision, that e-bikes should be treated the same as non-motorized bicycles; and

(6) Any combat or combat support vehicle when used in times of national defense emergencies.

(b) *Public lands* means any lands the surface of which is administered by the Bureau of Land Management.

(c) *Bureau* means the Bureau of Land Management.

(d) *Official use* means use by an employee, agent, or designated representative of the Federal Government or one of its contractors, in the course of his employment, agency, or representation.

(e) *Planning system* means the approach provided in Bureau regulations, directives and manuals to formulate multiple use plans for the public lands. This approach provides for public participation within the system.

(f) *Open area* means an area where all types of vehicle use is permitted at all times, anywhere in the area subject to the operating regulations and vehicle standards set forth in subparts 8341 and 8342 of this title.

(g) *Limited area* means an area restricted at certain times, in certain areas, and/or to certain vehicular use. These restrictions may be of any type, but can generally be accommodated within the following type of categories: Numbers of vehicles; types of vehicles; time or season of vehicle use; permitted or licensed use only; use on existing roads and trails; use on designated roads and trails; and other restrictions.

(h) *Closed area* means an area where off-road vehicle use is prohibited. Use of off-road vehicles in closed areas may be allowed for certain reasons; however, such use shall be made only with the approval of the authorized officer.

(i) *Spark arrester* is any device which traps or destroys 80 percent or more of the exhaust particles to which it is subjected.

(j) *Electric bicycle* (also known as an e-bike) means a two- or three-wheeled cycle with fully operable pedals and an electric motor of not more than 750 watts (1 h.p.) that meets the requirements of one of the following three classes:

(1) Class 1 electric bicycle shall mean an electric bicycle equipped with a motor that provides assistance only when the rider is pedaling, and that ceases to provide assistance when the bicycle reaches the speed of 20 miles per hour.

(2) Class 2 electric bicycle shall mean an electric bicycle equipped with a motor that may be used exclusively to propel the bicycle, and that is not capable of providing assistance when the bicycle reaches the speed of 20 miles per hour.

(3) Class 3 electric bicycle shall mean an electric bicycle equipped with a motor that provides assistance only when the rider is pedaling, and that ceases to provide assistance when the bicycle reaches the speed of 28 miles per hour.

Subpart 8342—Designation of Areas and Trails

■ 3. Amend § 8342.2 by adding paragraph (d) to read as follows:

§ 8342.2 Designation procedures.

* * * * *

(d) *E-bikes.* (1) Authorized officers may allow, as part of a land-use planning or implementation-level decision, e-bikes, or certain classes of e-bikes, whose motorized features are not being used exclusively to propel the e-bike for an extended period of time on roads and trails upon which mechanized, non-motorized use is allowed; and

(2) If the authorized officer allows e-bikes in accordance with this paragraph (d), an e-bike user shall be afforded all the rights and privileges, and be subject to all of the duties, of a user of a non-motorized bicycle.

[FR Doc. 2020–22239 Filed 10–30–20; 8:45 am]

BILLING CODE 4310–84–P

DEPARTMENT OF THE INTERIOR

Fish and Wildlife Service

50 CFR Part 27

[Docket No. FWS–HQ–NWRS–2019–0109; FXRS12630900000–201–FF09R81000]

RIN 1018–BE68

National Wildlife Refuge System; Use of Electric Bicycles

AGENCY: Fish and Wildlife Service, Interior.

ACTION: Final rule.

SUMMARY: We, the U.S. Fish and Wildlife Service, issue regulations pertaining to the use of electric bicycles (otherwise known as ''e-bikes''). These regulations have the potential to facilitate increased recreational opportunities for all Americans, especially for people with physical limitations. This rule will provide guidance and controls for the use of e-bikes in the National Wildlife Refuge System.

DATES: This rule is effective December 2, 2020.

ADDRESSES: The comments received on the proposed rule and the economic and threshold analysis prepared to inform the rule are available at the Federal e-rulemaking portal: *http://www.regulations.gov* in Docket No. FWS–HQ–NWRS–2019–0109.

FOR FURTHER INFORMATION CONTACT: Maggie O'Connell, National Wildlife Refuge System—Branch Chief for Visitor Services, 703–358–1883, *maggie_oconnell@fws.gov.*

Persons who use a telecommunications device for the deaf (TDD) may call the Federal Relay Service (FRS) at 1–800–877–8330, 24 hours a day, 7 days a week, to leave a message or question with the above individual. You will receive a reply during normal business hours.

SUPPLEMENTARY INFORMATION:

Background

The National Wildlife Refuge System Administration Act of 1966, as amended

by the National Wildlife Refuge System Improvement Act of 1997 (Administration Act) (16 U.S.C. 668dd–668ee), governs the administration and public use of national wildlife refuges, and the Refuge Recreation Act of 1962 (16 U.S.C. 460k–460k–4) governs the administration and public use of national wildlife refuges and national fish hatcheries.

National wildlife refuges are considered closed to the public until and unless the Secretary of the Interior (Secretary), acting through the U.S. Fish and Wildlife Service, opens the area for use. 50 CFR 25.21. The Secretary may open refuge areas to any use, including public recreation, upon a determination that the use is compatible with the purposes of the refuge and the National Wildlife Refuge System (NWRS) mission. 16 U.S.C. 668dd(d). The mission of the NWRS is: ''To administer a national network of lands and waters for the conservation, management, and where appropriate, restoration of the fish, wildlife, and plant resources and their habitats within the United States for the benefit of present and future generations of Americans.'' 16 U.S.C. 668dd(a)(2). Administration of the NWRS must also be in accordance with all applicable laws, and consistent with the principles of sound fish and wildlife management and administration.

The U.S. Fish and Wildlife Service (FWS) administers the NWRS via regulations contained in title 50 of the Code of Federal Regulations (CFR). These regulations, found at 50 CFR, chapter I, subchapter C, serve to protect the natural and cultural resources of refuges, and to protect visitors and property within those lands, by governing public use of the NWRS.

National wildlife refuges offer many outdoor recreation activities such as wildlife observation, fishing, and hunting, and nearly 200 national wildlife refuges allow bicycling on designated roads and trails. FWS regulations generally prohibit visitors from using motorized vehicles on refuges other than on designated routes of travel. See 50 CFR 27.31(a).

Traditional bicycles are allowed on some designated routes of travel and parking areas open to public motor vehicles. On refuges where the refuge manager has determined that such use is an appropriate and compatible use, bicycles are also allowed on certain roads, access trails, and other trails that are closed to public motor vehicle use but that may be open to motor vehicle use by the FWS for administrative purposes.

FWS policy set forth in the FWS Manual outlines a robust process for determining appropriate use and compatibility, which each refuge manager must follow when making refuge-specific decisions for allowing a proposed public use, such as e-biking. See 603 FW 2. This process must be followed even if other similar uses are already allowed.

This Rulemaking Action

FWS published a proposed rule on April 7, 2020 (85 FR 19418), pertaining to the use of low-speed e-bikes on NWRS lands in accordance with Secretary's Order 3376, which directed Department of the Interior (DOI) bureaus to propose regulations allowing e-bikes where other types of bicycles are allowed, consistent with other laws and regulations. The proposed rule put forward new regulations to be added to 50 CFR part 27, which pertains to prohibited acts on refuge lands. The current regulations in § 27.31 generally prohibit use of any motorized or other vehicles, including those used on air, water, ice, or snow, on national wildlife refuges except on designated routes of travel, as indicated by the appropriate traffic control signs or signals and in designated areas posted or delineated on maps by the refuge manager.

The proposed rule specified that the operator of an e-bike may use the small electric motor (not more than 1 horsepower) only to assist pedal propulsion. In other words, the proposed rule indicated that the motor may not be used to propel an e-bike without the rider also pedaling. However, based on comments received on the proposed rule, FWS has modified the final rule language to specify that e-bike operators may not propel an e-bike using the motor exclusively for extended periods of time. See the proposed rule (85 FR 19418, April 7, 2020) for further information on the purpose and provisions of the proposed regulations.

Promulgation of this rule supersedes FWS Director's Order 222, which was established to implement Secretary's Order 3376.

Comments Received

The proposed rule opened a public comment period, which ended June 8, 2020. We accepted comments on the proposed rule through the mail, by hand delivery, and through the Federal eRulemaking Portal at *www.regulations.gov.* By the close of the comment period, we received just over 16,000 comments from thousands of individuals and approximately 62 organizations.

Most (approximately 97%) of the comments we received were form comments, submitted by unique individuals but including very similar or identical content. Commenters expressing general support for the proposed rule most frequently cited the following reasons:

- E-bike use on NWRS lands will allow people to access lands and participate in bicycling when they otherwise could not due to age or physical limitations.
- The proposed rule will enable e-bike users more access to roads and trails, nature, and the outdoors.
- E-bike use can improve health through exercise and physical exertion.
- E-bikes cause no more damage to trails than traditional bicycles.
- The use of e-bikes reduces pollution compared to the use of other vehicles, and e-bikes are not noisy.

While some commenters stated general support for or opposition to the rule in whole or in part, the majority of commenters included at least one, and often multiple, unique and specific remarks about the proposed rule. In other words, a single commenter often provided more than one reason that supported or opposed the proposed rule. Many of the comments we received referenced a general topic, and we have grouped similar comments together in some instances, particularly if the response is the same for each of the comments. For example, we received multiple comments that suggested only certain classes of e-bikes should be allowed on nonmotorized trails. Some commenters stated that only Class 1 e-bikes should be allowed, while Class 2 and Class 3 e-bikes should be prohibited. Other commenters requested different combinations of e-bike classes be allowed or prohibited on national wildlife refuges. We grouped these class-related comments together. We also grouped other related comments, such as those addressing enforcement or visitor safety issues when our response for each would be the same. Summaries of the pertinent issues raised in the comments and FWS responses are provided below:

Comment (1): We received comments from several individuals and organizations that were dissatisfied with some aspect of the public review process associated with this rulemaking. Specifically, commenters stated that the length of the public review period was not sufficient due to the coronavirus pandemic, that the pandemic created obstacles to public participation, and that it prevented public meetings. Some commenters stated that due to the pandemic, the rulemaking should be postponed.

Our Response: The comment period began on Tuesday, April 7, 2020, and ended on Monday, June 8, 2020, for a total open period of 62 days, which is 2 days longer than the standard timeframe for proposed rules issued by the Department of the Interior. The 60-day public comment period is the opportunity for participation in the rulemaking process. During this time period, the public was invited to submit comments via mail or hand delivery or via the Federal eRulemaking portal (*http://www.regulations.gov/*). We received more than 16,000 comments during the public comment period. The large number of comments received suggests that the 60-day public review period was sufficient for providing public comment. Therefore, the FWS met the Administrative Procedure Act (APA; 5 U.S.C. 553) requirement for notice and comment. Public meetings are not required for informal rulemakings under the APA. Moreover, the public will have more opportunities to comment because refuge managers must provide an opportunity for public review and comment during the compatibility determination process. See 603 FW 2.11(I), 2.12(9).

Comment (2): We received comments stating the proposed rule violates the National Wildlife Refuge System Improvement Act of 1997 by interfering with other priority uses and prevents the FWS from managing for conservation over all other competing uses in the NWRS.

Our Response: This rule does not mandate the use of e-bikes at any national wildlife refuge. The rule defines permitted types of e-bikes and establishes a general framework that can be used by a refuge manager to allow e-bikes on designated roads and trails where traditional bicycles are already allowed. The National Wildlife Refuge System Improvement Act of 1997 states that ''the Secretary shall not initiate or permit a new use of a refuge or expand, renew, or extend an existing use of a refuge, unless the Secretary has determined that the use is a compatible use and that the use is not inconsistent with public safety.'' In determining if e-biking is appropriate and compatible, the refuge managers use their sound professional judgment to consider wildlife and habitat impacts, health and safety, potential conflicting uses, and available resources to manage the use. The National Wildlife Refuge System Improvement Act of 1997 provides guidelines for how managers may or may not implement new uses on refuges, and this rule does not violate the Act.

Comment (3): We received several comments stating that the FWS does not need rulemaking to allow e-bike use at national wildlife refuges because refuge managers can allow e-bikes under existing regulations.

Our Response: Although refuge managers can allow e-bikes under existing regulations, Secretary's Order 3376 was issued to clarify, simplify, and unify regulation of e-bikes on Federal lands managed by DOI, and it directed the FWS to develop the proposed rule. Prior to this final rule, e-bikes were not defined and e-bike use was not described in any FWS regulations. The rule defines the type and classes of e-bikes that a refuge manager may allow and provides a consistent management framework for the use of e-bikes in the NWRS. This rule does not authorize e-bike use; rather, such authorization would be based on subsequent evaluation and determination at the site-specific level. It provides the public with information about e-biking regulations and provides guidance to refuge managers to manage e-bike use at refuges.

Comment (4): We received comments about the ability of individual refuge managers to make decisions on e-bike use at a specific national wildlife refuge. Some commenters stated that refuge managers should be able to determine if e-bike use is a compatible use on a refuge. Other commenters stated that refuge managers should not have the authority to determine if e-bikes are compatible, and that this decision should be made for all refuges at a national level. One commenter stated that the FWS should conduct a general compatibility analysis first. Some commenters requested that the rule text should be rewritten to include a uniform set of guidelines, parameters, and criteria for refuge managers to use when determining if and how e-bike use is allowed.

Our Response: Established laws, regulations, and policies enable the FWS and the refuge manager to determine if a public use is allowed on a site-specific basis, as summarized below. The Administration Act stipulates that certain wildlife-dependent and other recreational uses, such as traditional bicycle and e-bike use, if found to be appropriate and compatible, are legitimate public uses of a refuge. FWS policy outlines a robust process for determining appropriate use and compatibility, which each refuge manager must follow when making refuge-specific decisions for a public use such as e-biking. The FWS has adopted policies and regulations implementing the requirements of the Administration Act that refuge managers comply with when considering appropriate and compatible uses on individual refuges.

According to FWS policy (603 FW 1.11), refuge managers base the finding of appropriateness on the following 10 criteria:

- We have jurisdiction over the use.
- The use is legal.
- The use is consistent with Executive Orders and Department and Service policies.
- The use is consistent with public safety.
- The use is consistent with refuge goals and objectives in an approved management plan.
- The use has not been rejected previously, unless circumstance or conditions have changed or it was not considered in a refuge planning process.
- The use is manageable within available budget and staff.
- The use will be manageable in the future within existing resources.
- The use contributes to the public's understanding and appreciation of the refuge's natural or cultural resources or is beneficial to the refuge's natural and cultural resources.
- The use can be accommodated without impairing existing wildlife-dependent recreation uses.

If the refuge manager finds e-bike use to be appropriate under the criteria above, the refuge manager must then determine whether e-bike use is ''compatible'' with the established purpose(s) of the refuge and the mission of the NWRS, as required by the Administration Act. Each refuge is established with unique refuge purposes, and, as such, the Administration Act requires each refuge to evaluate compatibility on a refuge-specific level. A compatible use is ''[a] proposed or existing wildlife-dependent recreational use or any other use of a national wildlife refuge that, based on sound professional judgment, will not materially interfere with or detract from the fulfillment of the National Wildlife Refuge System mission or the purposes of the national wildlife refuge.'' 603 FW 2.6(B). The refuge manager must issue a compatibility determination, which is ''a written determination signed and dated by the refuge manager and Regional Chief signifying that a proposed or existing use of a national wildlife refuge is a compatible use or is not a compatible use.'' 603 FW 2.6(A). The compatibility determination process includes a requirement for public notification and comment on the proposed use. 603 FW 2.11(I), 2.12(9). The refuge manager is required to consider the anticipated impacts that a

new use such as e-bikes would have on public safety, refuge resources, other uses, and other users. See the complete policy for determining compatibility of proposed and existing uses of national wildlife refuges for more information. 603 FW 2.

In addition, opening a refuge to specific public uses requires compliance with the National Environmental Policy Act (NEPA; 42 U.S.C. 4321 *et seq.*). Depending on the site and type of use, additional documentation may be required, such as an evaluation under section 7 of the Endangered Species Act (16 U.S.C. 1531 *et seq.*) or section 106 of the National Historic Preservation Act (16 U.S.C. 470 *et seq.*). There are more than 565 national wildlife refuges, and the established purposes, habitats, public uses, and many other conditions at individual national wildlife refuges can differ greatly. Local refuge managers may limit, restrict, or impose conditions on e-bike use where necessary to manage visitor-use conflicts and ensure visitor safety and resource protection.

Compatibility determinations are not final, as they require periodic reevaluation. Except for uses specifically authorized for a period longer than 10 years (such as rights-of-way), we will reevaluate compatibility determinations for all existing uses other than wildlife-dependent recreational uses when conditions under which the use is permitted change significantly, or if there is significant new information regarding the effects of the use, or at least every 10 years, whichever is earlier. 603 FW 2.11(H)(2). Moreover, a refuge manager may always reevaluate the compatibility of a use at any time. See 50 CFR 25.21(g). When we reevaluate a use for compatibility, we will take a fresh look at the use and prepare a new compatibility determination following the procedure outlined in 50 CFR 26.41 and 603 FW 2.

Comment (5): Several commenters stated the rule is inconsistent with the NWRS mission and the principles of sound fish and wildlife management. Some commenters stated that the rule does not appear to be compatible with the purposes of many national wildlife refuges.

Our Response: This rule does not mandate the use of e-bikes in the NWRS, and the rule itself is not inconsistent with the Refuge System mission and principles of sound fish and wildlife management. The Administration Act authorizes the Secretary of the Interior to allow the use of refuges for any use, including public recreation, if such use is compatible with the major purposes for which the refuge was established, among other considerations. 16 U.S.C. 668dd(d). Refuge managers are responsible for determining whether e-bike use is a compatible use for each refuge on a case-by-case basis. When completing compatibility determinations, refuge managers use ''sound professional judgment'' to determine if a use will materially interfere with or detract from the fulfillment of the NWRS mission or the purpose(s) of the refuge. ''Sound professional judgment'' is defined as: ''A finding, determination, or decision that is consistent with principles of sound fish and wildlife management and administration, available science and resources, and adherence to the requirements of the National Wildlife Refuge System Administration Act of 1966 (16 U.S.C. 668dd–668ee), and other applicable laws. Included in this finding, determination, or decision is a refuge manager's field experience and knowledge of the particular refuge's resources.'' 603 FW 2.6(U). If the refuge manager determines e-bike use to be an appropriate and compatible use, e-biking will be managed using principles of sound fish and wildlife management. For example, wildlife disturbance that is very limited in scope or duration may not result in interference with fulfilling the NWRS mission or refuge purposes. However, even unintentional minor harassment or disturbance during critical biological times, in critical locations, or repeated over time may exceed the compatibility threshold (603 FW 2.11(B)). If a refuge manager determines that e-bike use is not compatible on a particular refuge or in a part of a refuge, then the refuge manager shall prohibit the use of e-bikes on that refuge/in that area. Therefore, this rule is consistent with the NWRS mission.

Comment (6): One commenter requested that the rule should clarify e-bike use on national wildlife refuges in Alaska and change the rule text to align with the directives in Secretary's Order 3376. The commenter stated that the FWS should delete 50 CFR 27.31(m) as written in the proposed rule and add language in 50 CFR 25.12 to define e-bikes and exempt them from the definitions of off-road and motorized vehicles. In addition, the commenter stated that the proposed rule failed to adequately describe how the National Wildlife Refuge System Administration Act affects the management of e-bikes in Alaska and does not acknowledge that bicycle use in Alaska is managed according to 43 CFR 36.11.

Our Response: The FWS decided to add the definition of e-bikes to 50 CFR 27.31 because that section specifically deals with use of vehicles on national wildlife refuges. The FWS does not define motor vehicles or off-road vehicles in 50 CFR 25.12, and the regulation is more appropriate in 50 CFR 27.31. The Alaska National Interest Lands Conservation Act (ANILCA), Public Law 96–487, 94 Stat. 23–71, authorizes the use of nonmotorized surface transportation methods for traditional activities and for travel to and from villages and home sites within the NWRS in Alaska. 16 U.S.C. 3170(a). This allowance for special access applies in Alaska notwithstanding any other law and does not limit nonmotorized transportation to designated roads or trails. The Department of the Interior has interpreted this statutory allowance to include the use of traditional bicycles. E-bikes do not fall under this allowance because they have an electric motor and therefore are not ''nonmotorized.''

Notwithstanding the statutory allowance for traditional bicycles in Alaska, FWS is not willing to create different rules for e-bikes in Alaska than it does for e-bikes everywhere else within the NWRS. The stated purpose of Secretary's Order 3376 is to simplify and unify the regulations of e-bikes on lands managed by the Department of the Interior. The FWS shares this goal of a consistent management framework within the NWRS. Outside of Alaska, these regulations allow the use of bicycles on designated roads and trails only. Dispersed, overland use is not allowed. In order to manage e-bikes in a similar manner to traditional bicycles, the rule allows e-bikes only on roads and trails otherwise open to bicycle use and designated by the refuge manager. Although the special allowance in Alaska for traditional bicycles is not limited to roads and trails, the FWS declines to extend this special allowance for e-bikes in Alaska.

Comment (7): Some commenters stated they opposed the rule because there are already sufficient e-biking opportunities at national wildlife refuges and on DOI lands on roads or trails open to motorized vehicle users. One commenter stated that the proposed rule should require refuge managers to determine if e-bikes are compatible on roads and trails that already allow e-bikes and if they are compatible on new roads and trails.

Our Response: As stated in Secretary's Order 3376, the purpose of this rulemaking is to facilitate increased access to federally owned lands by e-bike riders and ensure consistency among Department of the Interior lands. The final rule directs refuge managers, if they find e-bike use is an appropriate

and compatible use, to provide e-bike operators (using the permitted classes in the manner described) with the same rights, privileges, and responsibilities as nonmotorized bicycle operators on roads and trails.

FWS policy outlines a robust process for determining appropriate use and compatibility that refuge managers follow when making refuge-specific decisions for a public use such as e-biking. E-biking will be a new use on designated routes of travel and nonmotorized roads and trails. Therefore, refuge managers must determine if e-bike use is an appropriate and compatible use on refuges on a case-by-case basis, regardless of whether other types of bicycles or motor vehicles are allowed.

Comment (8): We received comments opposing the proposed rule because of potential impacts to threatened and endangered species. One commenter stated that the rule violates the Endangered Species Act (ESA).

Our Response: The rule is administrative and procedural in nature. The rule itself will have no impact on threatened or endangered species. Opening a refuge to specific public uses requires compliance with NEPA. Depending on the site and type of use, additional documentation may be required, such as an evaluation under section 7 of the ESA or section 106 of the National Historic Preservation Act. Future implementation will be subject to the NEPA process on a case-by-case basis in conjunction with the compatibility-determination process. A use cannot be found appropriate and compatible if it is not legal, which includes consideration of the ESA. Applying the appropriate use and compatibility determination processes in conjunction with the NEPA process at a site-specific level will allow the refuge manager to evaluate detailed information on the potential impacts of e-bike use to wildlife, including threatened or endangered species, for a particular national wildlife refuge.

Comment (9): We received comments requesting the FWS to limit or restrict e-bike use in the NWRS based on e-bike class type. Some commenters stated that only certain e-bike classes should be allowed on roads and trails where traditional bicycles are allowed.

Our Response: It is not appropriate for the FWS to categorically limit or restrict certain e-bike classes throughout the NWRS for several reasons. For example, refuge purpose(s) vary widely between individual units in the NWRS, which we must take into account when determining if a proposed use is compatible. We must base compatibility determinations on a refuge-specific analysis of reasonably anticipated impacts of a particular use on refuge resources. If a refuge manager determines that one class of e-bike may cause unacceptable impacts to natural resources or the visitor experience, they may not allow that class on certain roads or trails. Furthermore, FWS policy in 603 FW 2 requires that we must manage conflicting uses among users of the refuge and analyze the costs for administering and managing a public use. This requires a site-specific evaluation, and NWRS-wide restrictions based on e-bike class or other factors is not possible. While the final rule provides definitions of a low-speed e-bike and includes three different classes, this rule enables the refuge manager to determine whether all or certain e-bike classes will be allowed or prohibited on all or certain roads or trails where other types of bicycles are allowed. For example, if the refuge manager determines that public safety impacts of one or more e-bike classes is unacceptable, this rule and the Administration Act allow the manager to limit or restrict certain classes on a site-specific basis.

Comment (10): Many commenters requested that the FWS should limit or restrict where e-bikes may be used on a national wildlife refuge. Many commenters stated that e-bikes should be allowed only where motor vehicles are allowed. Some commenters stated that e-bikes should be allowed wherever traditional bicycles are allowed. Some commenters stated that some trails were not appropriate for e-bike use due to design or topography issues.

Our Response: The rule has been established to facilitate increased public access on national wildlife refuges and clarify e-bike use for visitors. Allowing e-bikes on nonmotorized, natural surface, nonpaved, multiuse, or other types of roads or trails is subject to the discretion of the refuge manager, who is required to consider the anticipated impacts that a new use such as e-bikes would have on refuge resources and visitor experience. For the same reasons mentioned in our response to *Comment (9),* it is not appropriate for the FWS to categorically limit or restrict where e-bikes are allowed on specific national wildlife refuges or generally in the NWRS. While the final rule provides the same rights, privileges, and duties to a person operating an e-bike as the operator of a nonmotorized bicycle on roads and trails, the refuge manager can determine if and where e-bike use will be allowed. If the refuge manager determines that e-bike use will significantly impact public safety on a certain nonmotorized trail where other types of bicycles are allowed, this rule and the Administration Act permit the manager to limit or restrict where all or certain e-bike classes may be allowed on a site-specific basis.

Comment (11): Some commenters stated that the rule or preamble should clarify whether a refuge manager needs to determine if e-bike use is compatible on roads or trails where motor vehicles are allowed. In addition, some commenters stated that the rule should clarify what the rights and duties are for e-bike users on roads or trails where motor vehicles are allowed.

Our Response: This rule does not mandate the use of e-bikes in any national wildlife refuge or FWS-managed area. The rule stipulates that a refuge manager must determine if e-biking is compatible on roads or trails. FWS policy (603 FW 2) also states that the refuge manager will not initiate or permit a new use or expand, renew, or extend an existing use of a national wildlife refuge unless the refuge manager has determined that the use is a compatible use. This includes areas where motor vehicles or other types of bicycles are already allowed. The FWS has clarified this issue in the **SUPPLEMENTARY INFORMATION** section of this final rule.

The rights, privileges, and duties of e-bike users are described in the rule and in 50 CFR, chapter I, subchapter C. Paragraph (m) in the rule stipulates that if e-biking is allowed on certain roads and trails, ''any person using an e-bike where the motor is not used exclusively to propel the rider for an extended period of time, shall be afforded all the rights and privileges, and be subject to all of the duties, of the operators of nonmotorized bicycles on roads and trails.'' In addition to paragraph (m), e-bike and other bicycle users will be subject to the policy and provisions regarding vehicles found in 50 CFR 27.31.

Comment (12): Some commenters stated that the FWS should manage e-bikes separately from traditional bicycles. Some commenters stated that we should distinguish e-bikes from electric mountain bicycles and manage them independently.

Our Response: One purpose of this rule is to create a consistent management framework for the use of e-bikes in the NWRS. This rule allows the refuge manager to determine how best to manage public uses on a case-by-case basis while following established regulations and policy, as detailed in our response to *Comment (4).* When determining compatibility and how to best manage e-bike use, the refuge

manager may consider e-biking as an individual use, a specific use program, or part of a group of related uses. However, whenever practicable, the refuge manager should concurrently consider related uses or uses that are likely to have similar effects and associated facilities, structures, and improvements, in order to facilitate analysis of cumulative effects and to provide opportunity for effective public review and comment.

Whether a refuge manager considers e-biking and traditional bicycling as individual uses, a specific use program, or in conjunction with a group of related uses, the compatibility process enables the refuge manager to determine the allowance of e-bike use on a site-specific basis. E-bike use will be determined to be a compatible use if it does not materially interfere with or detract from the fulfillment of the NWRS mission and/or the purposes of the refuge. Otherwise, e-bike use will be determined to be not compatible. 603 FW 2.12(10). Through this process, the refuge manager can determine specifically if and how e-bike use will be allowed.

Comment (13): Some commenters expressed concern that refuge managers could apply the proposed rule inconsistently, which will lead to public confusion in the NWRS or across the landscape. Some commenters stated that the rule text should include parameters for e-bike use at national wildlife refuges that refuge managers can use to make their decisions.

Our Response: This rule establishes a definition for e-bikes and creates a management framework with parameters for the use of e-bikes in the NWRS. There are more than 565 national wildlife refuges, and the established purposes, habitats, public use, and many other conditions at individual national wildlife refuges can differ greatly. This rule and the Administration Act allow local refuge managers to limit, restrict, or impose conditions on e-bike use where necessary to manage visitor-use conflicts and ensure visitor safety and resource protection. While the FWS agrees that this process and subsequent allowance of e-bike use on a case-by-case basis may be confusing for visitors, refuge managers must perform these rigorous evaluations in order to make appropriate public-use decisions at the sites they manage. We encourage the public to access the official website before visiting a particular national wildlife refuge to determine if and how e-bike or other public uses are allowed, and to call the refuge for specific information not covered on the website.

Comment (14): Some commenters requested that we should clarify, change, or eliminate proposed rule text requiring users to pedal while using the motor to propel an e-bike, because that requirement would be impractical and difficult to enforce.

Our Response: The FWS agrees that the language in the proposed rule preamble (''that the motor may not be used to propel an e-bike without the rider also pedaling'') is impractical and does not align with the proposed rule language in paragraph (m) (''any person using the motorized features of an e-bike as an assist to human propulsion''). We agree there are times during typical use when an e-bike operator may not be pedaling, and the FWS has changed the language in the final rule accordingly. The language in paragraph (m) of the final rule states that ''any person using an e-bike in a manner where the motor is not used exclusively to propel the rider for an extended period of time shall be afforded all the rights and privileges, and be subject to all of the duties, of the operators of nonmotorized bicycles on roads and trails.'' While the new language applies to all e-bike users and clarifies that riders can alternately pedal and coast without pedaling during operation, this change affects Class 2 e-bike operators in particular because Class 2 e-bikes have a throttle in addition to pedals, which makes it easier for Class 2 e-bike operators to use the motor exclusively for extended periods of time.

FWS law enforcement officers will use observation, situational analysis, and professional judgment to determine if a violation of the regulations related to the ''use of an e-bike for an extended period of time using the motor exclusively'' occurs. The change to the final rule enables law enforcement officers to enforce the limitations on how Class 2 e-bikes may be used in a reasonable manner that ensures protection of public health, safety, resources, and uses of the public lands.

Comment (15): We received comments requesting an addition to the rule text requiring that e-bikes be equipped with a seat or saddle to separate them from other types of electric mobility devices.

Our Response: The definition provided in the rule, including the requirement for fully operable pedals, motor type, motor power specifications, and permitted number of wheels, is sufficient to allow use of e-bikes and does not apply to other electric mobility devices and other electric vehicles such as scooters or skateboards. No changes were made to the definitions of e-bikes as the result of this comment.

Comment (16): We received comments that the number of wheels on an e-bike should determine if an e-bike is permitted on certain trails. One commenter stated that the vehicle axle-width should determine trail access and if the vehicle has less than three wheels, it should qualify for single-track access. Another commenter recommended establishing a threshold of 15 inches as the bike's effective combined tread width to prevent wide three-wheeled e-bike users to access single-track trails. Some commenters stated that trail width should determine which type of e-bike use is allowed.

Our Response: The rule and the Administration Act require that refuge managers evaluate and determine a proposed use, such as e-biking, at a site-specific level. For example, if a single-track bicycle trail is too narrow to accommodate the width of three-wheeled e-bikes without causing unacceptable erosion or other impacts to natural resources, the refuge manager must prohibit those types of e-bikes on that trail. It is not appropriate for the FWS to categorically allow or prohibit the types or classes of e-bikes, or the types of roads or trails, for e-bike use in the NWRS because there are more than 565 national wildlife refuges, and the established purposes, habitats, public uses, topography, infrastructure, and many other conditions at individual national wildlife refuges can differ greatly. This rule and the Administration Act allow local refuge managers to limit, restrict, or impose conditions on e-bike use where necessary to manage visitor-use conflicts and ensure visitor safety and resource protection.

Comment (17): Many commenters stated concern about future high-speed e-bike use on national wildlife refuges, or concern about how the FWS will manage or enforce the rule regarding future technologies, design standards, features, and capabilities for Class 1, Class 2, and Class 3, and other types or classes of e-bikes.

Our Response: The FWS acknowledges that advances in technology and future e-bike specifications may result in some e-bike models, types, classes, or other specifications falling outside the definition of e-bikes established in the final rule. As one commenter noted, e-bike technology is in the early stages of development. The FWS is unable to predict the performance capabilities for e-bikes in the future and appreciates that the technology used in e-bikes is likely to continue to evolve at a rapid pace. However, the FWS concludes that the definition of e-bikes and three

classes in the final rule, in combination with a refuge manager's ability to determine if e-bikes are compatible, are sufficient to manage national wildlife refuges appropriately in the future.

Comment (18): Some commenters stated that the economic consequences of the displacement of traditional trail users must be addressed in the final rule. Some commenters stated that the proposed rule lacks a ''risk and needs assessment'' and that lack must be addressed in the final rule.

Our Response: The FWS prepared an economic and threshold analysis for the proposed rule, which concluded that the rule itself would not adversely affect, in a material way, the economy, a sector of the economy, productivity, competition, jobs, the environment, public health or safety, or State, local, or Tribal governments or communities. However, the economic and threshold analysis and proposed rule discussed the potential for an increase in conflicts between trail users following site-specific implementation of the rule, as well as an increase in the risk of injury or need for rescue. Since we know current traditional bicycling comprises only two percent of the average annual recreational visits, we estimate that increasing opportunities for e-bikes would most likely correspond with a small percentage of visits and a similar small percentage of displacement for traditional trail users. Given differences in current use across sites, potential e-bike use, and visitor preferences, it is not feasible to estimate the net effect of e-bike use on other trail users across all FWS roads and trails at this time. This rule and the Administration Act allow local refuge managers to limit, restrict, or impose conditions on e-bike use where necessary to manage visitor-use conflicts and ensure visitor safety and resource protection. This will allow the FWS to evaluate the effects of e-bike use at a site-specific level, where more detailed information on potential effects is available.

Comment (19): We received comments stating that e-bikes are motorized vehicles and should not be allowed in, or adjacent to, designated wilderness areas in the NWRS. Some commenters stated that the rule text should include that e-bikes are prohibited in designated wilderness areas.

Our Response: As with traditional bicycles, e-bikes are not allowed in designated wilderness areas and may not be appropriate for back-country trails. We do not agree to change the rule text as the Wilderness Act (16 U.S.C. 1133(c)) and National Wildlife Refuge System Wilderness Stewardship Policy (610 FW 1) already prohibit public use of motor vehicles, motorized equipment, and mechanical transport in wilderness areas designated by Congress. When a refuge manager makes a compatibility determination, he/she must consider applicable laws, including those related to designated wilderness areas. Therefore, bicycles and e-bikes are already prohibited in all designated wilderness areas on national wildlife refuges, and a refuge manager cannot deem e-bike use as an appropriate use in designated wilderness areas.

Comment (20): Several commenters questioned how the FWS's definition of ''electric bicycle'' in the rule would affect how e-bikes are treated under other laws that do not adopt the same definition or management framework. One comment stated that the final rule text should state that e-bikes are not allowed on National Scenic Trails that exist within units of the NWRS per the provisions of the National Trails System Act. One comment stated that e-bikes should be prohibited on the Appalachian Trail where other bicycles are prohibited. One comment stated that FWS should prohibit e-bikes on trails funded by the Recreational Trails Program, which are for nonmotorized use only.

Our Response: The FWS's definition of ''electric bicycles'' applies to management of electric bicycles within the NWRS under the framework established by this rule. It does not modify or affect other Federal laws and regulations in circumstances where they apply to the use of electric bicycles within the NWRS. For example, if a trail within the NWRS is constructed or maintained using funding sources which may prohibit or be inconsistent with e-bike use, such as the Recreational Trails Program and other Federal funding sources authorized by Title 23, Chapter 2 of the United States Code, then the refuge manager would not have the authority to designate e-bikes for use on that trail in a manner that conflicts with the other, applicable Federal law. Similarly, the FWS and refuge managers will manage the National Scenic Trails, including the Appalachian National Scenic Trail, that exist within the NWRS in accordance with the National Trails System Act.

Comment (21): Several commenters stated that the FWS must adhere to all existing State and Federal conservation easements and resource-management plans when determining if e-bike use should be allowed.

Our Response: E-biking implementation will be consistent with governing laws and regulations, including existing State and Federal conservation easements and other existing legal agreements. While easements do not usually include public use, refuge managers will have to take easements with public use, if any, into account when planning and making compatibility determinations. Under the Administration Act and FWS policy (602 FW 3), the NWRS manages national wildlife refuges according to an approved Comprehensive Conservation Plan (CCP), which describes the desired future conditions of the refuge and provides long-range guidance and management direction to achieve refuge purposes, including management guidance and direction on public uses. Any changes to public use on refuges need to be consistent with the refuge's CCP.

Comment (22): We received a comment stating that the rule should require that e-bikes operated within the NWRS be certified by an accredited, independent third-party certification body that examines electrical systems to achieve electrical and fire safety certification. Several commenters stated that e-bike batteries could overheat, burn, and cause fire danger.

Our Response: The U.S. Consumer Products Safety Commission (CPSC) is responsible for evaluating and making recommendations about electrical safety standards for consumer products manufactured and sold in the United States. E-bike manufacturers are required to comply with mandatory standards set by the CPSC. Product certification and safety requirements are not established or mandated by the FWS. A refuge manager may make a determination at any time to manage an existing public use with regard to public safety, resource protection, and visitor protections.

Comment (23): Some commenters stated that the FWS must maintain a sign standard and post areas, trails, and roads open to e-bikes with signs that clearly indicate allowed uses and types or classes of e-bikes.

Our Response: The FWS will work with the other land-management agencies within the Department of the Interior to design and post signs, to the extent possible. The goal of this effort is to create a consistent approach for signs when possible indicating where e-bikes are allowed on national wildlife refuges and other public lands managed by the Department of the Interior. As with all existing and new public uses allowed on a national wildlife refuge, refuge managers have the discretion to establish any safety, communication, outreach, and education measures deemed necessary to ensure that e-bikes

are used in a manner that maintains a safe and enjoyable experience for all visitors.

Comment (24): Some commenters stated that the FWS has not sufficiently analyzed the economic implications of the rule. Other commenters stated that the FWS does not have the financial resources or employees to adequately manage e-bike use. Commenters stated that the proposed rule and e-bike use on nonmotorized trails would result in increased operations costs associated with: Trail maintenance; trail monitoring and repairs; cultural resources damage; additional search-and-rescue operations; sign acquisition and installation; personal injury and liability claims; law-enforcement efforts; fish, wildlife, and plant management and administration; and other management and monitoring activities.

Our Response: As with many public uses in the NWRS, there are financial and staffing costs to operate public-use programs. This rule does not mandate the use of e-bikes anywhere in the NWRS. To help avoid situations where refuge managers do not have the resources to properly manage e-bikes, this rule and the Administration Act give refuge managers the discretion to allow e-bike use where it is an appropriate and compatible use (see our response to *Comment (4)*). When determining if a new or existing public use is compatible, FWS regulations require refuge managers to evaluate reasonably anticipated impacts of a particular use on refuge resources, and if ''adequate resources (including financial, personnel, facilities, and other infrastructure) exist or can be provided by the FWS or a partner to properly develop, operate, and maintain the use in a way that will not materially interfere with or detract from fulfillment of the refuge purpose(s) and the NWRS mission.'' 603 FW 2.12(A)(7). This process enables the refuge manager to determine the allowance of e-bike use on a site-specific basis—the refuge manager may determine that it is a compatible use, or that it is not a compatible use. The refuge manager should not allow e-bikes if there would be insufficient funds or personnel to properly manage this use. The refuge manager will consider potential user conflicts and other public health and safety concerns in accordance with NEPA and other applicable laws as part of a site-specific analysis. Liability, if any, in the event that accidents or injuries were to occur as a result of or in conjunction with e-bike use would be determined in accordance with applicable laws, which may include the Federal Tort Claims Act.

Comment (25): Some commenters stated the rule disregards research demonstrating adverse impacts from e-bikes and has not analyzed e-bike compatibility.

Our Response: This rule does not mandate e-bike use throughout the NWRS. This rule and the Administration Act give refuge managers the discretion to allow e-biking if it is found to be an appropriate and compatible use. The FWS will consider the suitability of e-bike use on specific roads and trails through subsequent analysis consistent with the requirements of NEPA and other applicable laws. Potential impacts for a proposed use are evaluated on a case-by-case basis and not as part of this rulemaking process.

Refuge managers base compatibility determinations on a refuge-specific analysis of reasonably anticipated impacts of e-biking on refuge resources. The refuge manager should base the analysis on readily available information, including local experience and understanding of the refuge and other information provided by the State, Tribes, proponent(s) or opponent(s) of e-biking, or through the compatibility-determination public review and comment period. 603 FW 2.11(E). The FWS received the studies and reports that were submitted as part of the comments on the proposed rule. All relevant studies and reports will be considered by the refuge manager in the compatibility-determination process.

Comment (26): Some commenters asserted that the rule cannot be categorically excluded under 43 CFR 46.210(i) because it is not ''of an administrative, financial, legal, technical, or procedural nature.''

Our Response: This rule is administrative and procedural in nature and satisfies the first prong of the categorical exclusion at 43 CFR 46.210(i). The rule is not self-executing and does not authorize the use of any e-bikes. The rule merely establishes a definition of e-bikes and creates a process for refuge managers to consider whether to authorize e-bike use on public lands. Under that process, refuge managers will evaluate whether to allow for e-bike use on roads and trails, in consideration of specific criteria. The rule maintains the public's ability to participate in any such FWS decision-making process while preserving refuge managers' discretion to approve or deny e-bike use on roads and trails—and to impose limitations or restrictions on authorized e-bike use to minimize impacts on resources and conflicts with other recreational uses. Because the future decision-making processes through which refuge managers could allow e-bikes must comply with NEPA and other laws providing for public participation, the public will continue to have an opportunity to provide input. Moreover, because the rule provides refuge managers with complete discretion to determine whether e-bikes—or only certain classes of e-bikes—are appropriate on a specific road or trail, it preserves the FWS's ability to minimize the impacts that e-bikes could have on resources or other users of the public lands. The rule, because it is administrative and procedural in nature and would not result in any on-the-ground changes or other environmental effects, therefore satisfies the first prong of the categorical exclusion at 43 CFR 46.210(i).

Comment (27): Some commenters requested an environmental analysis, environmental impact statement (EIS), or programmatic EIS to analyze the rulemaking and e-bike impacts. These commenters stated that the rule cannot be categorically excluded under 43 CFR 46.210(i) because the environmental effects are not ''too broad, speculative, or conjectural to lend themselves to meaningful analysis.''

Our Response: This rule is administrative and procedural in nature and satisfies the second prong of the categorical exclusion at 43 CFR 46.210(i). There are more than 565 national wildlife refuges, and the established purposes, wildlife and plants, habitats, public uses, number of visitors, and many other conditions at individual national wildlife refuges can differ greatly, making nationwide NEPA analysis for the rule infeasible. This rule and the Administration Act give refuge managers the discretion to allow e-bike use where it is an appropriate and compatible use. We will address potential environmental impacts and social issues at the site-specific level. The FWS will consider the suitability of e-bike use on specific roads and trails through subsequent analysis consistent with the requirements of NEPA and other applicable laws. The environmental effects will vary from refuge to refuge, and, as such, are too broad, speculative, or conjectural at this stage to lend themselves to meaningful analysis. The FWS concludes that site-specific NEPA analysis is required in order to obtain meaningful analysis regarding environmental effects.

Comment (28): Some commenters stated that the FWS must analyze the impacts the rule would have on the landscape, natural resources, and other visitors. One commenter stated that the FWS must analyze such impacts before

opening up all nonmotorized trails to motors.

Our Response: This rule does not mandate the use of e-bikes at any national wildlife refuge. The rule is administrative and procedural in nature and the rule itself will have no impacts on safety, the visitor experience, or refuge natural and cultural resources. The rule defines permitted types of e-bikes and establishes a general framework that can be used by a refuge manager to allow e-bikes on designated roads and trails. E-bike implementation decisions for each national wildlife refuge must be based on local conditions, potential impacts, resource data, and relevant studies. The rule and the Administration Act enable the refuge manager to determine if e-biking is an appropriate and compatible use on a site-specific basis, and the rule does not mandate opening all nonmotorized trails to motors.

Applying the NEPA process at a site-specific level allows the FWS to evaluate the potential effects of e-bike use for a particular national wildlife refuge and to consult with the appropriate Federal, State, and local resources agencies regarding potential resource impacts. For example, regarding potential wildlife impacts, it would be shortsighted for a rule of this nature to prescribe disturbance thresholds for wildlife at all national wildlife refuges, as local conditions vary significantly at the more than 565 units in the NWRS throughout the country. Analyzing e-bike use on a case-by-case basis allows for site and specific species information concerning disturbance thresholds to be incorporated into that decision process. Furthermore, as mentioned in our response to *Comment (4),* the refuge manager can reevaluate the compatibility of a use at any time if conditions change or new information becomes available.

Comment (29): One commenter stated that impacts must be analyzed in the rulemaking process and the rule cannot be categorically excluded under 43 CFR 46.210(i). Some commenters stated that extraordinary circumstances under 43 CFR 46.215 are applicable to this rulemaking, making it ineligible for a categorical exclusion.

Our Response: As noted in the NEPA section in the preamble to this rule, we determined that this rule falls under the class of actions listed in 43 CFR 46.210(i). A refuge manager will determine if e-biking is a compatible use before allowing it on a national wildlife refuge. This determination must be made on a case-by-case basis. E-bike use on a refuge will not be allowed, per the rule, without a compatible-use determination and appropriate NEPA analysis specific to the particular refuge. Potential impacts are not ripe for analysis until or unless the use of e-bikes is proposed on one of the more than 565 national wildlife refuges where the specific context is known and the intensity of impacts can be evaluated. The FWS has also determined that the rule does not involve any of the extraordinary circumstances listed in 43 CFR 46.215 that would require further analysis under NEPA, as outlined individually below. Commenters cited the following extraordinary circumstances under 43 CFR 46.215:

(a) Significant impacts on public health and safety.

Comment (29)(a): Commenters state that they provide documentation of significant safety impacts of e-bikes within their comment, including citations to numerous supporting studies.

Our Response: The FWS acknowledges there are potential safety concerns with e-bike use or any proposed use. The refuge manager will analyze public health and safety impacts on a site-specific basis as required when determining compatibility for e-bike use. Potential safety issues regarding e-bike use on specific roads and trails will be considered by the refuge manager when making the determination as to whether e-bikes will be allowed on those trails. In analyzing the potential impacts of e-biking, refuge managers will use and cite available sources of information from available research and studies. Therefore, public health and safety will not be affected by the rule.

(b) Significant impacts on natural resources and unique geographic characteristics, refuge and recreation lands, migratory birds, and other resources.

Comment (29)(b): Commenters state that the rule will have significant impacts on national wildlife refuge resources cited in 43 CFR 46.215(b).

Our Response: The rule does not change current allowed refuge uses and therefore has no significant impacts to vulnerable categories identified in 43 CFR 46.215(b). If e-bike use is proposed in one of these vulnerable categories on a national wildlife refuge, then the significance of impacts would be a factor in determining the level of NEPA analysis required for the proposed use.

(c) Highly controversial environmental effects or unresolved conflicts concerning alternative uses of available resources.

Comment (29)(c): Commenters stated that the comments submitted by key stakeholders who expressed passionate, substantial, and varied viewpoints in support of or in opposition to the rule fit the definition of highly controversial in 43 CFR 46.215(c).

Our Response: The language in 43 CFR 46.215(c) pertains to whether the environmental effects are highly controversial (*i.e.,* there is significant scientific disagreement about whether a specific action will impact the environment, and how), as opposed to whether a general topic, such as e-bike use on public lands, is controversial. Paragraph (c) does not apply to this rule because the rule does not have any direct impacts but may apply to future site-specific determinations a refuge manager may make when determining if e-bike use is compatible on roads or trails.

(d) Highly uncertain and potentially significant environmental effects or involve unique and unknown environmental risk.

Comment (29)(d): Commenters state that the categorical exclusion should not apply due to unique risks that e-bikes present, as a result of fast speeds and as the first and only motorized use in back-country areas.

Our Response: The rule does not determine where e-bikes will be used. The potential impacts of e-bike use are dependent on where such use is proposed. Any environmental effects associated with future decisions will be subject to the NEPA process, and potential impacts will be analyzed at the refuge-specific level. In response to speed concerns for e-bike use, a refuge manager may ''describe any stipulations (terms or conditions) necessary to ensure compatibility.'' 603 FW 2.11. Stipulations may include limiting speed or locations so that the use could be safely conducted.

(e) Establish a precedent for future action or represent a decision in principle about future actions with potentially significant environmental effects.

Comment (29)(e): Commenters stated that the rule establishes a precedent for future actions and opens the floodgates for numerous similar technological impacts.

Our Response: The rule is necessary in order to allow effective management of this evolving technology and address the rapidly expanding use of e-bikes on public land. As discussed in our response to *Comment (15),* the FWS concludes that the definition provided in the rule, including the requirement for fully operable pedals, motor type, motor power specifications, and permitted number of wheels, is sufficient to allow use of e-bikes and does not apply to similar technological

impacts, other electric mobility devices, and other electric vehicles or uses such as scooters or skateboards.

(f) Direct relationship to other actions with individually insignificant but cumulatively significant environmental effects.

Comment (29)(f): Commenters state that cumulative impacts of hundreds of units approving e-bikes will be significant when considered nationwide.

Our Response: The categorical exclusion for the rule change makes no assertion as to the level of NEPA analysis required for any proposed use area for e-bikes. A proposed use area for e-bikes is independent of any other proposed use area. The level of NEPA analysis required would be determined by the nature of the proposed action.

(g) Significant impacts on properties listed, or eligible for listing, on the National Register of Historic Places.

Comment (29)(g): Commenters stated that many FWS units contain current or potentially listed historic places and some were established specifically to protect such places, so in light of their special national importance, the rule for system-wide approval is improper.

Our Response: The rule does not change current uses; therefore, the rule change does not impact historic properties. If e-bike use is proposed on roads or trails, then potential impacts on historic properties would be a factor in determining the level of NEPA analysis required for the proposed use.

(h) Significant impacts on species listed, or proposed to be listed, on the List of Endangered or Threatened Species, or have significant impacts on designated critical habitat.

Comment (29)(h): The proposed rule violates the Endangered Species Act.

Our Response: The rule is administrative and procedural in nature. The rule itself will have no impact on threatened or endangered species. We address this comment specifically in our response to *Comment (8).*

Comment (30): Commenters stated that a categorical exclusion cannot be applied to justify post-hoc decision-making since Secretary's Order 3376 directed that ''e-bikes shall be allowed where other types of bicycles are allowed.'' The commenters stated that to apply a categorical exclusion to justify post-hoc decision-making is arbitrary and capricious and directs predetermined outcomes.

Our Response: The rule does not mandate that e-bike use is allowed in the NWRS, and the FWS is not applying a categorical exclusion to allow predetermined outcomes. The rule and the Administration Act give refuge managers the discretion to allow e-bike use if and where it is an appropriate and compatible use (see our response to *Comment (4)*). Secretary's Order 3376 and the rule do not require refuge managers to always allow e-bike use. Since the NEPA determinations must be made at a site-specific level, the invocation of the categorical exclusion is contemporaneous with the decision-making, not post hoc.

Comment (31): Many commenters expressed concern about enforcement of the rule or potential actions and impacts that could occur if e-bike users are allowed where traditional bicycles are allowed, especially on nonmotorized trails. Some commenters stated that the rule may facilitate illegal trail creation or trail access by e-bike users or other vehicle users, and that such illegal use would be difficult to enforce. Some commenters stated that e-bikes could be modified to exceed allowable horsepower and speed limits, which would be difficult to detect and enforce. Commenters also stated that it would be difficult to distinguish some e-bikes from traditional bicycles, or between classes of e-bikes defined in the final rule. Commenters emphasized that these enforcement challenges would be exacerbated by potential violations occurring at high speeds and in remote locations.

Our Response: The FWS acknowledges that implementation of the rule may pose certain enforcement challenges. However, those challenges are not unique. They regularly arise in the context of enforcing laws that govern recreational use of public lands. With their experience enforcing other regulations that condition how the public recreates on public lands, law enforcement officers have the expertise necessary to properly exercise their discretion to enforce the rule that ensures protection of public health, safety, and resources and users of the public lands. Moreover, the enforcement challenges posed by this requirement are warranted given the requirement's potential benefits to affected public land resources and users. For example, determining when a potential violation of the requirement that Class 2 e-bikes be used in a manner where the motor is not used exclusively to propel the rider for an extended period of time will involve the use of specialized skill, training, and judgment by law enforcement officers. With respect to differentiating among traditional bicycles and e-bikes, and among classes of e-bikes, the FWS notes that most States require e-bikes to have a label that displays the class, top assisted speed, and power outlet of the electric motor. Some e-bikes can be differentiated from traditional bicycles by simple observation. In other cases, the FWS expects that its law enforcement officers will involve the use of their specialized skills, training, and judgment to enforce this requirement, even if the e-bike is not labeled, through observation of riding behaviors, questioning, or other means of investigation. FWS law enforcement officers are tasked on a daily basis with enforcing speed limits and equipment and operational requirements for the use of motor vehicles used within the NWRS.

Comment (32): We received many comments opposing the proposed rule due to concerns about the potential impacts e-bikes would have on natural resources, safety, and the visitor experience. Several commenters stated that e-bikes would cause greater cumulative impacts to the natural environment than are caused by traditional bicycles due to their ability to travel longer distances into more remote areas. Many commenters noted the potential for disturbing wildlife, plants, and their habitats, watersheds, ecosystems, grooving and erosion of ground surfaces, degradation of sensitive plant habitats, and negative impacts on geological features and cultural and archeological sites. Other commenters stated that e-bikes would create safety risks if riders travel farther, into more remote areas, and through more challenging terrain than would be possible with traditional bicycles. Safety concerns were also raised about the speed of e-bikes, in particular on narrow and winding trails with limited sight lines, and the increased potential for accidents and conflicts with other trail users, such as hikers and horseback riders. According to some commenters, adding e-bikes to shared trails would cause overcrowding and marginalize other forms of recreation.

Our Response: This rule does not mandate the use of e-bikes in the NWRS. The rule is administrative and procedural in nature and the rule itself will have no impacts on safety, the visitor experience, or national wildlife refuge natural and cultural resources. This rule establishes a general framework that can be used by refuge managers if they allow e-bikes on certain roads and trails where traditional bicycles are already allowed. As discussed in the response to *Comment (4)* above, the allowance of e-bikes on roads or trails is subject to the discretion of the refuge manager who must complete a rigorous compatibility-determination process to consider the impacts that e-bike use would have,

including impacts on refuge resources and visitor experience. Refuge managers will allow only uses that they determine to be appropriate and compatible to the purpose for which the refuge was established and can be sustained without causing unacceptable impacts to public safety, natural and cultural resources, and other public uses. These required evaluations and determinations are not modified or changed by this rule.

E-bike implementation decisions for each national wildlife refuge must be based on local conditions, potential impacts, resource data, and relevant studies. Applying the NEPA process at a site-specific level will allow the FWS to evaluate the potential effects of e-bike use for a particular national wildlife refuge and to consult with the appropriate Federal, State, and local resource agencies regarding potential resource impacts. E-biking or any proposed use could impact visitors and resources in similar or different ways at the more than 565 units in the NWRS. Analyzing and describing the reasonably anticipated impacts of e-bike use on a case-by-case basis is an important factor that we consider when allowing or not allowing a refuge use.

Comment (33): One commenter stated that the rule would be inconsistent with the direction in Executive Order 11644, ''Use of Off-Road Vehicles on the Public Lands,'' (amended by Executive Order 11989), noting that there is no exception for low-power vehicles.

Our Response: Executive Order 11644 was issued by President Nixon in 1972 and amended by President Carter in 1977 through Executive Order 11989. It establishes policies and procedures for managing the use of ''off-road vehicles'' to protect the resources of the public lands, promote safety of all users of the lands, and minimize conflicts among those users. The Executive Order defines ''off-road vehicles'' as any motorized vehicle designed for or capable of cross-country travel on or immediately over land, water, sand, snow, ice, marsh, swampland, or other natural terrain. The FWS concludes that e-bikes should not be regulated as ''off-road vehicles'' under the Executive Order for the reasons discussed below.

The Class 1, 2, and 3 e-bikes that are the subject of this rule differ significantly in their engineering from the types of motorized vehicles that are expressly referenced in Executive Order 11644. Almost all of the off-road vehicles listed in the Executive Order: ''motorcycles, minibikes, trial bikes, snowmobiles, dune-buggies, [and] all-terrain vehicles'' use internal combustion engines for power rather than an electric motor, and none rely on the rider pedaling the vehicle to provide most of the power to the vehicle as this rule requires. Moreover, the off- road vehicles to which the Executive Order was clearly intended to apply are uniformly larger, louder, and capable of achieving greater speeds than Class 1, 2, and 3 e-bikes. For these reasons, e-bikes are inherently different than the types of ''off-road vehicles'' listed under the Executive Order. There is no indication in any materials contemporaneous to its issuance that suggest that Executive Order 11644 was intended to apply to e-bikes. That is not surprising, given that the technological advances needed to popularize them, such as torque motors and power controls, were not developed until the mid-1990s.

As a result of those engineering differences, e-bikes tend to have impacts that are like traditional, nonmotorized bicycles and unlike those that result from the larger, more powerful off-road vehicles that Executive Order 11644 was intended to mitigate. These differences will inherently limit the resource impacts and user conflicts that the minimization criteria in Executive Order 11644 was designed to address. For example, the off-road vehicles referenced in Executive Order 11644 are powered by internal combustion engines that generate loud noises (*i.e.,* anywhere from 90–110 decibels, depending on the type of vehicle) that can carry over long distances. By comparison, the noise associated with e-bikes includes the sound of their tires rolling over a road or trail and, at most, a low steady whine that may be emitted when the electric motor is engaged. While the effects of noise on wildlife differ across taxonomic groups and reactions to sound are different for every visitor, the impacts on quietude, wildlife behavioral patterns, and other recreational uses caused by e-bikes are expected to be similar to those caused by traditional, nonmotorized bicycles and substantially less than those resulting from typical off-road vehicle use. Also, unlike all the vehicles listed in the Executive Order, e-bikes do not emit exhaust that could impact air quality and the health of nearby users.

A review of available models shows that Class 1, 2, and 3 e-bikes are generally much lighter than even the lightest off-road vehicle listed in the Executive Order. A typical e-bike weighs approximately 45–50 pounds, which is only slightly heavier than a typical traditional, nonmotorized bicycle's weight of 30–35 pounds. In comparison, minibikes, which are the lightest off-road vehicle listed in Executive Order 11644, weigh an average of 115–130 pounds, typical trial bikes can weigh 145 pounds, and motorcycles can weigh approximately 300–400 pounds. The significantly lower weight of e-bikes, combined with the lower levels of torque that they are capable of generating and lower speeds that they can reach, limits their potential to damage soil through compaction and erosion. Finally, managing Class 1, 2, and 3 e-bikes similarly to traditional, nonmotorized bicycles and distinguishing them from other motor vehicles is consistent with how other Federal agencies regulate e-bikes. Defined by Congress in the Consumer Product Safety Act (Pub. L. 107–319, Dec. 4, 2002; codified at 15 U.S.C. 2085) as low-speed electric bicycles, e-bikes are not considered to be motor vehicles under 49 U.S.C. 30102 and, therefore, are not subject to regulation by the National Highway Traffic Safety Administration. Instead, e-bikes are regulated similar to nonmotorized bicycles and considered consumer products regulated by the Consumer Product Safety Commission.

Changes From the Proposed Rule

We received comments that asked us to clarify or eliminate the requirement in the proposed rule that a person must be using the motorized features of an e-bike as an assist to human propulsion. Many commenters stated that this requirement was impractical and unenforceable. In response, we are revising the proposed rule as follows: (m) If the refuge manager determines that electric bicycle (also known as e-bike) use is a compatible use on roads or trails, any person using an e-bike in a manner where the motor is not used exclusively to propel the rider for an extended period of time, shall be afforded all the rights and privileges, and be subject to all of the duties, of the operators of nonmotorized bicycles on roads and trails.

We agree there are times during a ride when an e-bike user may not be pedaling, just as there are times when a traditional bicycle user may not be pedaling. We agree that the proposed rule language could cause difficulty for a person to operate an e-bike in a similar manner to traditional bicycles, and that the proposed rule would be difficult to enforce.

The FWS changed the language in the final rule in paragraph (m) to better reflect its intent that e-bike motors, via throttle-only operation, may be used for limited durations, but should not be used to propel the rider for extended periods of time. The new language clarifies for users and law enforcement officers that e-bikes can be operated in

a similar manner as traditional bicycles. Law enforcement officers will use observation, situational analysis, and professional judgment to determine if a potential violation of the regulation occurs.

Compliance With Laws, Executive Orders, and Department Policy

Regulatory Planning and Review (Executive Orders 12866 and 13563)

Executive Order 12866 provides that the Office of Information and Regulatory Affairs (OIRA) in the Office of Management and Budget (OMB) will review all significant rules. The OIRA has determined that this rule is not a significant regulatory action as defined by Executive Order 12866.

Executive Order (E.O.) 13563 reaffirms the principles of E.O. 12866 while calling for improvements in the nation's regulatory system to promote predictability, to reduce uncertainty, and to use the best, most innovative, and least burdensome tools for achieving regulatory ends. The Executive Order directs agencies to consider regulatory approaches that reduce burdens and maintain flexibility and freedom of choice for the public where these approaches are relevant, feasible, and consistent with regulatory objectives. E.O. 13563 emphasizes further that regulations must be based on the best available science and that the rulemaking process must allow for public participation and an open exchange of ideas. We have developed this rule in a manner consistent with these requirements.

Executive Order 13771—Reducing Regulation and Controlling Regulatory Costs

This rule is an Executive Order (E.O.) 13771 (82 FR 9339, February 3, 2017) deregulatory action. This rule addresses regulatory uncertainty regarding the use of e-bikes in the NWRS by defining e-bikes and clarifying that any person using an e-bike shall be afforded all of the rights and privileges, and be subject to all of the duties, of the operators of nonmotorized bicycles on roads and trails, when such use is deemed appropriate and compatible.

This rule is not self-executing. The rule, in and of itself, does not change existing allowances for e-bike usage on national wildlife refuges. It neither allows e-bikes on roads and trails that are currently closed to off-road vehicles but open to mechanized, nonmotorized bicycle use, nor affects the use of e-bikes and other motorized vehicles on roads and trails where off-road vehicle use is currently allowed.

Regulatory Flexibility Act

Under the Regulatory Flexibility Act (as amended by the Small Business Regulatory Enforcement Fairness Act [SBREFA] of 1996) (5 U.S.C. 601 *et seq.*), whenever a Federal agency is required to publish a notice of rulemaking for any proposed or final rule, it must prepare and make available for public comment a regulatory flexibility analysis that describes the effect of the rule on small entities (*i.e.,* small businesses, small organizations, and small government jurisdictions). However, no regulatory flexibility analysis is required if the head of an agency certifies that the rule will not have a significant economic impact on a substantial number of small entities. Thus, for a regulatory flexibility analysis to be required, impacts must exceed a threshold for ''significant impact'' and a threshold for a ''substantial number of small entities.'' See 5 U.S.C. 605(b). SBREFA amended the Regulatory Flexibility Act to require Federal agencies to provide a statement of the factual basis for certifying that a rule will not have a significant economic impact on a substantial number of small entities.

The rule is administrative in nature and will not, in and of itself, result in any foreseeable impacts because this rule only establishes a general framework that can be used by refuge managers if they allow e-bikes on certain roads and trails where traditional bicycles are already allowed. However, for transparency, we discuss current traditional bicycle use on refuges and potential changes in recreation use if refuge managers determine that e-bikes are appropriate and compatible to the purpose for which the refuge was established.

In 2019, there were approximately 1.4 million bicycle visits on 197 refuges (34.6 percent of all refuges). Of these 197 refuges, 136 refuges had fewer than 1,000 bicycle visits. These visits comprised approximately 2 percent (=2.34%) of total recreational visits for the Refuge System. Under this rule, recreational activities on refuges could be expanded by allowing e-bikes where determined appropriate and compatible by the refuge manager. As a result, recreational visitation at these refuges may change. The extent of any increase would likely be dependent upon factors such as whether current bicyclists change from using traditional bicycles to e-bikes, whether walking/hiking visits change to e-bike visits, or whether other recreational visitors decrease visits due to increased conflicts. The impact of these potential factors is uncertain. However, we estimate that increasing opportunities for e-bikes would correspond with less than 2 percent of the average recreational visits due to the small percentage of current bicycling visits.

Small businesses within the retail trade industry (such as hotels, gas stations, sporting equipment stores, and similar businesses) may be affected by some increased or decreased station visitation due to this rule. A large percentage of these retail trade establishments in the local communities near national wildlife refuges and national fish hatcheries qualify as small businesses. We expect that the incremental recreational changes will be scattered, and so we do not expect that the rule would have a significant economic effect on a substantial number of small entities in any region or nationally.

Therefore, we certify that this rule will not have a significant economic effect on a substantial number of small entities as defined under the Regulatory Flexibility Act (5 U.S.C. 601 *et seq.*). A regulatory flexibility analysis is not required. Accordingly, a small entity compliance guide is not required.

Small Business Regulatory Enforcement Fairness Act (SBREFA)

This rule is not a major rule under 5 U.S.C. 804(2), the Small Business Regulatory Enforcement Fairness Act. This rule:

a. Will not have an annual effect on the economy of $100 million or more.

b. Will not cause a major increase in costs or prices for consumers, individual industries, Federal, State, or local government agencies, or geographic regions.

c. Will not have significant adverse effects on competition, employment, investment, productivity, innovation, or the ability of U.S.-based enterprises to compete with foreign-based enterprises.

Unfunded Mandates Reform Act

This rule will not impose an unfunded mandate on State, local, or Tribal governments or the private sector of more than $100 million per year. The rule will not have a significant or unique effect on State, local, or Tribal governments or the private sector. A statement containing the information required by the Unfunded Mandates Reform Act (2 U.S.C. 1531 *et seq.)* is not required.

Takings (Executive Order 12630)

In accordance with Executive Order 12630, this rule does not have significant takings implications. This rule would affect only visitors at

national wildlife refuges, which are not private property.

Federalism (Executive Order 13132)

Under the criteria in section 1 of Executive Order 13132, this rule does not have sufficient federalism implications to warrant the preparation of a federalism summary impact statement. This rule will not have substantial direct effects on the States, on the relationship between the national government and the States, or on the distribution of power and responsibilities among the various levels of government. The FWS will coordinate with State and local governments, as appropriate, when making future planning and implementation level decisions under this rule regarding the use of e-bikes on public lands. A federalism summary impact statement is not required.

Civil Justice Reform (Executive Order 12988)

In accordance with E.O. 12988, the Department of the Interior has determined that this rule will not unduly burden the judicial system and that it meets the requirements of sections 3(a) and 3(b)(2) of the Order. Specifically, this rule:

(a) Meets the criteria of section 3(a) requiring that all regulations be reviewed to eliminate errors and ambiguity and be written to minimize litigation; and

(b) Meets the criteria of section 3(b)(2) requiring that all regulations be written in clear language and contain clear legal standards.

Paperwork Reduction Act

This rule does not contain information collection requirements, and a submission to OMB under the Paperwork Reduction Act of 1995 (44 U.S.C. 3501 *et seq.)* is not required. We may not conduct or sponsor and you are not required to respond to a collection of information unless it displays a currently valid OMB control number.

National Environmental Policy Act

We are required under the National Environmental Policy Act (NEPA; 42 U.S.C. 4321 *et seq.*) to assess the impact of any Federal action significantly affecting the quality of the human environment, health, and safety. This rule does not constitute a major Federal action significantly affecting the quality of the human environment. A detailed statement under NEPA is not required because the rule is covered by a categorical exclusion. We have determined that this rule falls under the class of actions covered by the following Department of the Interior categorical exclusion: ''Policies, directives, regulations, and guidelines: that are of an administrative, financial, legal, technical, or procedural nature; or whose environmental effects are too broad, speculative, or conjectural to lend themselves to meaningful analysis and will later be subject to the NEPA process, either collectively or case-by-case.'' 43 CFR 46.210(i)).

Under the rule, a refuge manager must first make a determination that e-bike use is a compatible use before allowing e-bike use on a national wildlife refuge. This determination must be made on a case-by-case basis. E-bike use on a refuge will not be allowed under the rule without a compatible-use determination and appropriate NEPA compliance specific to the action with respect to a particular refuge. Potential impacts are not ripe for analysis until or unless the use of e-bikes is proposed on a specific national wildlife refuge where the context is known and the intensity of impacts can be evaluated. The FWS has also determined that the rule does not involve any of the extraordinary circumstances listed in 43 CFR 46.215 that would require further analysis under NEPA.

Government-to-Government Relationship With Tribes

We have evaluated this rule under the Department's consultation policy and under the criteria in Executive Order 13175 and have determined that it has no substantial direct effects on federally recognized Indian Tribes and that consultation under the Department's Tribal consultation policy is not required. This rulemaking is an administrative change that directs the FWS to address e-bike use in future compatibility determinations. The rule does not change existing allowances for e-bike use on FWS-administered public lands. The rulemaking does not commit the agency to undertake any specific action, and the FWS retains the discretion to authorize e-bike use where appropriate. We are committed to consulting with federally recognized Indian Tribes when appropriate on a site-specific basis as potential e-bike use is considered by the FWS.

List of Subjects in 50 CFR Part 27

Wildlife refuges.

Regulation Promulgation

In consideration of the foregoing, we hereby amend part 27, subchapter C of chapter I, title 50 of the Code of Federal Regulations as follows:

PART 27—PROHIBITED ACTS

■ 1. The authority citation for part 27 continues to read as follows:

Authority: 5 U.S.C. 685, 752, 690d; 16 U.S.C. 460k, 460l–6d, 664, 668dd, 685, 690d, 715i, 715s, 725; 43 U.S.C. 315a.

Subpart C—Disturbing Violations: With Vehicles

■ 2. Amend § 27.31 by redesignating paragraph (m) as paragraph (n) and adding a new paragraph (m) to read as follows:

§ 27.31 General provisions regarding vehicles.

* * * * *

(m) If the refuge manager determines that electric bicycle (also known as e-bike) use is a compatible use on roads or trails, any person using an e-bike where the motor is not used exclusively to propel the rider for an extended period of time shall be afforded all of the rights and privileges, and be subject to all of the duties, of the operators of nonmotorized bicycles on roads and trails. An e-bike is a two- or three-wheeled electric bicycle with fully operable pedals and an electric motor of not more than 750 watts (1 h.p.) that meets the requirements of one of the following three classes:

(1) Class 1 e-bike shall mean an electric bicycle equipped with a motor that provides assistance only when the rider is pedaling, and that ceases to provide assistance when the bicycle reaches the speed of 20 miles per hour.

(2) Class 2 e-bike shall mean an electric bicycle equipped with a motor that may be used exclusively to propel the bicycle, and that is not capable of providing assistance when the bicycle reaches the speed of 20 miles per hour.

(3) Class 3 e-bike shall mean an electric bicycle equipped with a motor that provides assistance only when the rider is pedaling, and that ceases to provide assistance when the bicycle reaches the speed of 28 miles per hour.

* * * * *

George Wallace,

Assistant Secretary for Fish and Wildlife and Parks.

[FR Doc. 2020–22107 Filed 10–30–20; 8:45 am]

BILLING CODE 4333–15–P

Proposed Rules

Federal Register

Vol. 85, No. 212

Monday, November 2, 2020

This section of the FEDERAL REGISTER contains notices to the public of the proposed issuance of rules and regulations. The purpose of these notices is to give interested persons an opportunity to participate in the rule making prior to the adoption of the final rules.

DEPARTMENT OF HOMELAND SECURITY

8 CFR Part 214

[CIS No. 2674–20; DHS Docket No. USCIS–2020–0019]

RIN 1615–AC61

Modification of Registration Requirement for Petitioners Seeking To File Cap-Subject H–1B Petitions

AGENCY: U.S. Citizenship and Immigration Services, Department of Homeland Security.

ACTION: Notice of proposed rulemaking.

SUMMARY: The Department of Homeland Security (DHS or the Department) proposes to amend its regulations governing the process by which U.S. Citizenship and Immigration Services (USCIS) selects H–1B registrations for filing of H–1B cap-subject petitions (or H–1B petitions for any year in which the registration requirement will be suspended), by generally first selecting registrations based on the highest Occupational Employment Statistics (OES) prevailing wage level that the proffered wage equals or exceeds for the relevant Standard Occupational Classification (SOC) code and area(s) of intended employment. This proposed rule would not affect the order of selection as between the regular cap and the advanced degree exemption. The wage level ranking would occur first for the regular cap selection and then for the advanced degree exemption. Rote ordering of petitions leads to impossible results because petitions are submitted simultaneously. A random lottery system is reasonable, but inconsiderate of Congress's statutory purposes for the H–1B program and its administration. Instead, a registration system that faithfully implements the INA while prioritizing registrations based on wage level within each cap would increase the average and median wage levels of H–1B beneficiaries who would be selected for further processing under the H–1B allocations. Moreover, it would maximize H–1B cap allocations, so that they more likely would go to the best and brightest workers.

DATES: Written comments must be submitted on this proposed rule on or before December 2, 2020. Comments on the collection of information (see Paperwork Reduction Act section) must be received on or before January 4, 2021. Comments on both the proposed rule and the collection of information received on or before December 2, 2020 will be considered by DHS and USCIS. Only comments on the collection of information received between December 3, 2020 and January 4, 2021 will be considered by DHS and USCIS. Comments received after December 2, 2020 on the proposed rule other than those specific to the collection of information will not be considered by DHS and USCIS.

ADDRESSES: You may submit comments on the entirety of this proposed rule package, identified by DHS Docket No. USCIS–2020–0019, through the *Federal eRulemaking Portal: http://www.regulations.gov.* Follow the website instructions for submitting comments. Comments submitted in a manner other than the one listed above, including emails or letters sent to DHS or USCIS officials, will not be considered comments on the proposed rule and may not receive a response from DHS. Please note that DHS and USCIS cannot accept any comments that are hand delivered or couriered. In addition, USCIS cannot accept comments contained on any form of digital media storage devices, such as CDs/DVDs and USB drives. Due to COVID–19, USCIS is also not accepting mailed comments at this time. If you cannot submit your comment by using *http://www.regulations.gov,* please contact Samantha Deshommes, Chief, Regulatory Coordination Division, Office of Policy and Strategy, U.S. Citizenship and Immigration Services, Department of Homeland Security, by telephone at (202) 658–9621 for alternate instructions.

FOR FURTHER INFORMATION CONTACT: Charles L. Nimick, Chief, Business and Foreign Workers Division, Office of Policy and Strategy, U.S. Citizenship and Immigration Services, Department of Homeland Security, 20 Massachusetts Ave. NW, Suite 1100, Washington, DC 20529–2120. Telephone Number (202) 658–9621 (not a toll-free call). Individuals with hearing or speech impairments may access the telephone numbers above via TTY by calling the toll-free Federal Information Relay Service at 1–877–889–5627 (TTY/TDD).

SUPPLEMENTARY INFORMATION:

I. Table of Contents

II. Public Participation
III. Background
A. Purpose and Summary of the Regulatory Action
B. Legal Authority
C. The H–1B Visa Program's Numerical Cap and Exemptions
D. Current Selection Process
E. Wage Requirement
F. Proposed Rule
IV. Statutory and Regulatory Requirements
A. Executive Orders 12866 (Regulatory Planning and Review), Executive Order 13563 (Improving Regulation and Regulatory Review), and Executive Order 13771 (Reducing Regulation and Controlling Regulatory Costs)
1. Summary of Economic Effects
2. Background and Purpose of the Proposed Rule
3. Historic Population
4. Cost-Benefit Analysis
i. Costs and Cost Savings of Regulatory Changes to Petitioners
a. Methodology Based on Historic FYs 2019–2020
b. FY 2021 Data
c. Unquantified Costs & Benefits
d. Costs of Filing Form I–129H1 Petitions
e. Costs of Submitting Registrations as Modified by This Proposed Rule
f. Familiarization Cost
ii. Total Estimated Costs of Regulatory Changes
iii. Costs to the Federal Government
5. Regulatory Alternatives
B. Regulatory Flexibility Act
1. Initial Regulatory Flexibility Analysis
i. A Description of the Reasons Why the Action by the Agency Is Being Considered
ii. A Statement of the Objectives of, and Legal Basis for, the Proposed Rule
iii. A Description and, Where Feasible, an Estimate of the Number of Small Entities to Which the Proposed Changes Would Apply
iv. A Description of the Projected Reporting, Recordkeeping, and Other Compliance Requirements of the Proposed Rule, Including an Estimate of the Classes of Small Entities That Will Be Subject to the Requirement and the Types of Professional Skills
v. An Identification of All Relevant Federal Rules, to the Extent Practical, That May Duplicate, Overlap, or Conflict With the Proposed Rule
vi. Description of Any Significant Alternatives to the Proposed Rule That Accomplish the Stated Objectives of Applicable Statutes and That Minimize Any

Significant Economic Impact of the Proposed Rule on Small Entities
C. Unfunded Mandates Reform Act
D. Executive Order 13132 (Federalism)
E. Executive Order 12988 (Civil Justice Reform)
F. Executive Order 13175 (Consultation and Coordination With Indian Tribal Governments)
G. National Environmental Policy Act
H. Paperwork Reduction Act
1. USCIS H–1B Registration Tool
2. USCIS Form I–129
I. Signature

II. Public Participation

DHS invites all interested parties to participate in this rulemaking by submitting written data, views, comments, and arguments on all aspects of this proposed rule. DHS also invites comments that relate to the economic, environmental, or federalism effects that might result from this proposed rule. Comments must be submitted in English, or an English translation must be provided. Comments that will provide the most assistance to DHS in implementing these changes will: Reference a specific portion of the proposed rule; explain the reason for any recommended change; and include data, information, or authority that supports such a recommended change. Comments submitted in a manner other than those listed in the **ADDRESSES** section, including emails or letters sent to DHS or USCIS officials, will not be considered comments on the proposed rule. Please note that DHS and USCIS cannot accept any comments that are hand delivered or couriered. In addition, USCIS cannot accept mailed comments contained on any form of digital media storage devices, such as CDs/DVDs and USB drives.

Instructions: If you submit a comment, you must include the agency name (U.S. Citizenship and Immigration Services) and the DHS Docket No. USCIS–2020–0019 for this proposed rule. Regardless of the method used for submitting comments or material, all submissions will be posted, without change, to the Federal eRulemaking Portal at *http://www.regulations.gov,* and will include any personal information you provide. Therefore, submitting this information makes it public. You may wish to consider limiting the amount of personal information that you provide in any voluntary public comment submission you make to DHS. DHS may withhold information provided in comments from public viewing that it determines may impact the privacy of an individual or is offensive. For additional information, please read the Privacy and Security Notice available at *http://www.regulations.gov.*

Docket: For access to the docket and to read background documents or comments received, go to *http://www.regulations.gov,* referencing DHS Docket No. USCIS–2020–0019. You may also sign up for email alerts on the online docket to be notified when comments are posted or a final rule is published.

III. Background

A. Purpose and Summary of the Regulatory Action

On April 18, 2017, the President issued an Executive order that instructed DHS to ''propose new rules and issue new guidance, to supersede or revise previous rules and guidance if appropriate, to protect the interests of United States workers in the administration of our immigration system.'' [1] E.O. 13788 specifically mentioned the H–1B program and directed DHS and other agencies to ''suggest reforms to help ensure that H–1B visas are awarded to the most-skilled or highest-paid petition beneficiaries.'' [2] On June 22, 2020, the President issued a Proclamation, *Suspension of Entry of Immigrants and Nonimmigrants Who Present a Risk to the United States Labor Market During the Economic Recovery Following the 2019 Novel Coronavirus Outbreak* (Proclamation).[3] Section 5 of the Proclamation directs the Secretary of Homeland Security to, ''as soon as practicable, and consistent with applicable law, consider promulgating regulations or take other appropriate action regarding the efficient allocation of visas pursuant to section 214(g)(3) of the INA (8 U.S.C. 1184(g)(3)) and ensuring that the presence in the United States of H–1B nonimmigrants does not disadvantage United States workers.'' [4]

DHS proposes to amend its regulations governing the selection of registrations submitted by prospective petitioners eventually seeking to file H–1B cap-subject petitions (or the selection of petitions, if the registration process were suspended), which includes petitions subject to the regular cap and those asserting eligibility for the advanced degree exemption, to allow for ranking and selection based on wage levels. When applicable, USCIS would rank and select the registrations received generally on the basis of the highest OES wage level that the proffered wage would equal or exceed for the relevant SOC code and in the area of intended employment, beginning with OES wage level IV and proceeding in descending order with OES wage levels III, II, and I. The proffered wage is the wage that the employer intends to pay the beneficiary. As explained in greater detail below, this ranking process would not alter the prevailing wage level associated with a given position for U.S. Department of Labor (DOL) purposes, which is informed by a comparison of the requirements for the proffered position to the normal requirements for the occupational classification.

Prioritizing wage levels in the registration selection process incentivizes employers to offer higher wages, or to petition for positions requiring higher skills and higher-skilled aliens that are commensurate with higher wage levels, to increase the likelihood of selection for an eventual petition. Similarly, it disincentivizes abuse of the H–1B program to fill lower-paid, lower-skilled positions, which is a significant problem under the present selection system.[5] With limited exceptions, H–1B petitioners are not required to demonstrate a labor shortage as a prerequisite for obtaining H–1B workers.

The number of H–1B cap-subject petitions, including those filed for the advanced degree exemption, has frequently exceeded the annual H–1B numerical allocations. For at least the last decade, USCIS has received more H–1B petitions than the annual H–1B numerical allocation in those respective years. Since the FY2014 cap season (April 2013), USCIS has received more H–1B petitions (or registrations) in the first five days of filing (or the initial registration period) than the annual H–

[1] *See* Executive Order 13788, *Buy American and Hire American,* 82 FR 18837, sec. 5 (Apr. 18, 2017).

[2] *See id.* at sec. 5(b).

[3] *See* Proclamation 10052 of June 22, 2020, *Suspension of Entry of Immigrants and Nonimmigrants Who Present a Risk to the United States Labor Market During the Economic Recovery Following the 2019 Novel Coronavirus Outbreak,* 85 FR 38263 (June 25, 2020).

[4] *See id.*

[5] *See* U.S. Department of Homeland Security, U.S. Citizenship and Immigration. Services, Office of Policy and Strategy, Policy Research Division, *I–129 Petition for H–1B Nonimmigrant Worker (Cap Subject) Wage Levels for H–1B Petitions filed in FY2018,* Database Queried: Aug. 17, 2020, Report Created: Aug. 17, 2020, Systems: C3 via SASPME, DOL OFLC Performance DATA H1B for 2018, 2019 (showing that, for petitions with identifiable certified labor condition applications, 161,432 of the 189,963 (or approximately 85%) H–1B petitions for which wage levels were reported were for level I and II wages); *I–129 Petition for H–1B Nonimmigrant Worker (Cap Subject) Wage Levels for H–1B Petitions filed in FY2019,* Database Queried: Aug. 17, 2020, Report Created: Aug. 17, 2020, Systems: C3 via SASPME, DOL OFLC Performance DATA H1B for 2018, 2019 (showing that, for petitions with identifiable certified labor condition applications, 87,589 of the 103,067 (or approximately 85%) H–1B petitions for which wage levels were reported were for level I and II wages).

1B numerical allocations. But the INA states that ''aliens who are subject to the numerical limitations . . . shall be issued visas (or otherwise provided nonimmigrant status) in the order in which petitions are filed for such visas or status.'' [6] A rote interpretation of this provision is impossible.[7] ''365 days in a year and 85,000 available visas'' means many submissions are received on the same day.[8] For example, under the prior petition selection process (which remains in effect in any year in which registration is suspended), USCIS received hundreds of thousands of full H–1B petitions in the mail on the same day and had no legitimate way to determine which petition was ''filed'' first. Therefore, DHS promulgated a regulation describing a random registration selection process before any petitions are filed.[9] A passive interpretation of the statutory requirement is similarly impossible to apply under the current electronic registration system because it would result in hundreds of thousands of registrants uploading registration information online at the exact same moment, at best leaving computer speed as the determinant as to who registered first.

The current random lottery selection process is reasonable, but not optimal. It has caused results that contradict the purpose of the statute. However, ''[i]t is a cardinal canon of statutory construction that statutes should be interpreted harmoniously with their dominant legislative purpose.'' [10] Yet, under the current registration system the majority of H–1B cap-subject petitions have been filed for positions certified at the two lowest wage levels: level I or level II prevailing wages.[11] This contradicts the dominant legislative purpose of the statute because the intent of the H–1B program is to help U.S. employers fill labor shortages in positions requiring *highly skilled* or *highly educated* workers.[12] So, by changing the selection process, for these years of excess demand, from a random lottery selection to a wage-level-based selection process, DHS would implement the statute more faithfully to its dominant legislative purpose, increasing the chance of selection for registrations or petitions seeking to employ beneficiaries at wages that would equal or exceed the level IV or level III prevailing wage for the applicable occupational classification. A wage-level-based selection also is consistent with the administration's goal of improving policies such that H–1B classification is more likely to be awarded to petitioners seeking to employ higher-skilled and higher-paid beneficiaries.[13]

B. Legal Authority

The Secretary of Homeland Security's authority for these regulatory amendments is found in various sections of the Immigration and Nationality Act (INA), 8 U.S.C. 1101 *et seq.,* and the Homeland Security Act of 2002 (HSA), Public Law 107–296, 116 Stat. 2135, 6 U.S.C. 101 *et seq.* General authority for issuing this proposed rule is found in INA section 103(a), 8 U.S.C. 1103(a), which authorizes the Secretary to administer and enforce the immigration and nationality laws, as well as HSA section 102, 6 U.S.C. 112, which vests all of the functions of DHS in the Secretary and authorizes the Secretary to issue regulations. *See also* 6 U.S.C. 202(4) (charging the Secretary with ''[e]stablishing and administering rules . . . governing the granting of visas or other forms of permission . . . to enter the United States to individuals who are not a citizen or an alien lawfully admitted for permanent residence in the United States''). Further authority for these regulatory amendments is found in:

- INA section 101(a)(15)(H)(i)(b), 8 U.S.C. 1101(a)(15)(H)(i)(b), which classifies as nonimmigrants aliens coming temporarily to the United States to perform services in a specialty occupation or as a fashion model with distinguished merit and ability;
- INA section 214(a)(1), 8 U.S.C. 1184(a)(1), which authorizes the Secretary to prescribe by regulation the terms and conditions of the admission of nonimmigrants;
- INA section 214(c), 8 U.S.C. 1184(c), which, among other things, authorizes the Secretary to prescribe how an importing employer may petition for an H nonimmigrant worker, and the information that an importing employer must provide in the petition; and
- INA section 214(g), 8 U.S.C. 1184(g), which, among other things, prescribes the H–1B numerical limitations, various exceptions to those limitations, and criteria concerning the order of processing H–1B petitions.

Further, under HSA section 101, 6 U.S.C. 111(b)(1)(F), a primary mission of DHS is to ''ensure that the overall economic security of the United States is not diminished by efforts, activities, and programs aimed at securing the homeland.''

Finally, as explained above, ''Congress left to the discretion of USCIS how to handle simultaneous submissions.'' [14] Accordingly, ''USCIS has discretion to decide how best to order those petitions'' in furtherance of Congress' legislative purpose.[15]

---

[6] *See* INA section 214(g)(3).

[7] *See* Registration Requirement for Petitioners Seeking To File H–1B Petitions on Behalf of Cap-Subject Aliens, 84 FR 888, 896 (Jan. 31, 2019).

[8] *See Walker Macy LLC* v. *United States Citizenship & Immigration Servs.,* 243 F. Supp. 3d 1156, 1170 (D. Or. 2017).

[9] *See* Registration Final Rule, *supra* note 7.

[10] *See Spilker* v. *Shayne Labs., Inc.,* 520 F.2d 523, 525 (9th Cir. 1975) (citing *F.T.C.* v. *Fred Meyer, Inc.,* 390 U.S. 341, 349 (1968) (''[W]e cannot, in the absence of an unmistakable directive, construe the Act in a manner which runs counter to the broad goals which Congress intended it to effectuate.'')).

[11] *See* U.S. Department of Homeland Security, U.S. Citizenship and Immigration. Services, Office of Policy and Strategy, Policy Research Division, *H–1B Wage Level by Top 25 Metro,* Database Queried: July 10, 2020, Report Created: July 14, 2020, Systems: C3 via SASPME, DOL OFLC Performance DATA H1B for 2018, 2019, Bureau of Labor Statistics: Occupational Employment Statistics for 2018, 2019 (establishing that, for the top 25 metropolitan service areas for which H–1B beneficiaries were sought in FYs 2018 and 2019, all level I wages, 84% of level II wages, and 76% of ''No Wage Level'' wages fell below the Bureau of Labor Statistics median wages); Daniel Costa and Ron Hira, Economic Policy Institute, *H–1B Visas and Prevailing Wage Level* (May 4, 2020), *https://www.epi.org/publication/h-1b-visas-and-prevailing-wage-levels/* (explaining that ''three-fifths of all H–1B jobs were certified at the two lowest prevailing wages in 2019...., and, ''[i]n fiscal year (FY) 2019, a total of 60% of H–1B positions certified by Department of Labor (DOL) had been assigned wage levels [I and II]: 14% were at H–1B Level 1 (the 17th percentile) and 46% per at H–1B Level 2 (34th percentile)''). Data concerning FY 2018 and 2019 petition filings pre-dates the publication of DOL, ETA, *Strengthening Wage Protections for the Temporary and Permanent Employment of Certain Aliens in the United States,* 85 FR 63872 (Oct. 8, 2020).

[12] *See* H.R. Rep. 101–723(I) (1990), *as reprinted in* 1990 U.S.C.C.A.N. 6710, 6721 (stating ''The U.S. labor market is now faced with two problems that immigration policy can help to correct. The first is the need of American business for highly skilled, specially trained personnel to fill increasingly sophisticated jobs for which domestic personnel cannot be found and the need for other workers to meet specific labor shortages'').

[13] *See* Kirk Doran et al., University of Notre Dame, *The Effects of High-Skilled Immigration Policy on Firms: Evidence from Visa Lotteries* (Feb. 2016), *https://gspp.berkeley.edu/assets/uploads/research/pdf/h1b.pdf* (noting that ''additional H–1Bs lead to lower average employee earnings and higher firm profits'' and the authors' ''results are more supportive of the narrative about the effects of H–1Bs on firms in which H–1Bs crowd out alternative workers, are paid less than the alternative workers whom they crowd out, and thus increase the firm's profits despite no measurable effect on innovation''); John Bound et al., National Bureau of Economic Research, *Understanding the Economic Impact of the H–1B Program on the U.S.,* Working Paper 23153 (Feb. 2017), *http://www.nber.org/papers/w23153* (''In the absence of immigration, wages for US computer scientists would have been 2.6% to 5.1% higher and employment in computer science for US workers would have been 6.1% to 10.8% higher in 2001.'').

[14] *See Walker Macy* v. *USCIS,* 243 F.Supp.3d at 1176 (finding that USCIS' rule establishing the random-selection process was a reasonable interpretation of the INA).

[15] *Id.*

C. The H–1B Visa Program's Numerical Cap and Exemptions

The H–1B visa program allows U.S. employers to temporarily hire foreign workers to perform services in a specialty occupation, services related to a Department of Defense (DoD) cooperative research and development project or coproduction project, or services of distinguished merit and ability in the field of fashion modeling. *See* INA 101(a)(15)(H)(i)(b), 8 U.S.C. 1101(a)(15)(H)(i)(b); Public Law 101–649, section 222(a)(2), 104 Stat. 4978 (Nov. 29, 1990); 8 CFR 214.2(h). A specialty occupation is defined as an occupation that requires the (1) theoretical and practical application of a body of highly specialized knowledge and (2) attainment of a bachelor's or higher degree in the specific specialty (or its equivalent) as a minimum qualification for entry into the occupation in the United States. *See* INA 214(i)(l), 8 U.S.C. 1184(i)(l).

Congress has established limits on the number of foreign workers who may be granted initial H–1B nonimmigrant visas or status each fiscal year (FY) (commonly known as the ''cap''). *See* INA section 214(g), 8 U.S.C. 1184(g). The total number of foreign workers who may be granted initial H–1B nonimmigrant status during any FY currently may not exceed 65,000. *See* INA section 214(g), 8 U.S.C. 1184(g). Certain petitions are exempt from the 65,000 numerical limitation. *See* INA section 214(g)(5) and (7), 8 U.S.C. 1184(g)(5) and (7). The annual exemption from the 65,000 cap for H–1B workers for those who have earned a qualifying U.S. master's or higher degree may not exceed 20,000 foreign workers. *See* INA section 214(g)(5)(C), 8 U.S.C. 1184(g)(5)(C).

Congressional intent behind creating the H–1B program was, in part, to help U.S. employers fill labor shortages in positions requiring highly skilled or highly educated workers.[16] A key goal of the program at its inception was to help U.S. employers obtain the temporary employees they need to meet their business needs to remain competitive in the global economy.[17] To address legitimate countervailing concerns of the adverse impact foreign workers could have on U.S. workers, Congress put in place a number of measures intended to protect U.S. workers, including the annual numerical cap. Congress was concerned that a surplus of foreign labor could depress wages for all workers in the long run and recognized the cap as a means of ''continuous monitoring of all admissions.'' [18]

The demand for H–1B workers subject to the annual numerical cap has exceeded the cap every year for more than a decade. This high demand created a rush of simultaneous submissions at the beginning of the H–1B petition period, preventing a straightforward application of the statutory provision that these H–1B cap numbers be awarded on a first-come, first served basis, *i.e.,* ''in the order in which the petitions are filed,'' as described above. ''It is not difficult to envision a scenario where many more petitions arrive on the final receipt date than are needed to fill the statutory cap, and processing them 'in order' . . . may also be random and arbitrary.'' [19] To that end, DHS has implemented regulations over the years that provide for a random selection from all filings or registrations that occur within a certain timeframe.

However, while the random selection of petitions or registrations is reasonable, DHS believes it is neither the optimal, nor the exclusive, method of selecting petitions or registrations toward the numerical allocations when more registrations or petitions, as applicable, are submitted than projected as needed to reach the numerical allocations. Pure randomization does not serve the ends of the H–1B program or Congressional intent. Further, as one court has importantly held, ''Congress left to the discretion of USCIS how to handle simultaneous submissions'' and ''USCIS has discretion to decide how best to order those petitions.'' [20] In recognition of this clear discretion, DHS has it within its authority to further revise and refine how it believes USCIS can best order H–1B petitions or registrations. Therefore, DHS believes it is necessary and consistent with the intent of the H–1B statutory scheme to utilize the numerical cap in a way that incentivizes a U.S. employer's recruitment of beneficiaries for positions requiring the highest skill levels within the visa classification or otherwise earning the highest wages in an occupational classification and area of intended employment, which correlates with higher skill levels. Put simply, because demand for H–1B visas has exceeded the annual supply for more than a decade,[21] DHS prefers that cap-subject H–1B visas go to beneficiaries earning the highest wages relative to their SOC codes and area(s) of intended employment. DHS believes that salary generally is a reasonable proxy for skill level.[22] In every fiscal year since FY 2011, the number of H–1B cap-subject petitions, including those filed for the advanced degree exemption, has exceeded the annual H–1B numerical allocations.[23] By engaging in a wage-level-based prioritization of registrations, DHS is better ensuring that new H–1B visas will go to the highest skilled or highest paid beneficiaries. Facilitating the admission of higher-skilled workers ''would benefit the economy and increase the United States' competitive edge in attracting the 'best and the brightest' in the global labor market,'' consistent with the goals of the H–1B program.[24]

DHS data shows a correlation between higher salaries and higher wage levels.[25] As a position's required skill level increases relative to the occupation, so,

[16] *See* H.R. Rep. 101–723(I), *supra* note 12 at 6721.

[17] *See* Bipartisan Policy Council, *Immigration in Two Acts,* Nov. 2015, at 7, *https://bipartisanpolicy.org/wp-content/uploads/2019/03/BPC-Immigration-Legislation-Brief.pdf,* citing H.R. Rep. 101–723(I) *supra* note 12 at 6721 (''At the time [1990], members of Congress were also concerned about U.S. competitiveness in the global economy and sought to use legal immigration as a tool in a larger economic plan, stating that 'it is unlikely that enough U.S. workers will be trained quickly enough to meet legitimate employment needs, and immigration can and should be incorporated into an overall strategy that promotes the creation of the type of workforce needed in an increasingly global economy.' '').

[18] *See* H.R. Conf. Rep. 101–955, at 126 (1990), *as reprinted in* 1990 U.S.C.C.A.N. 6784, 6790–91.

[19] *See Walker Macy,* 243 F.Supp.3d at 1174.

[20] *Id.* at 1176.

[21] Total Number of H–1B Cap-Subject Petitions Submitted FYs 2016–2020, USCIS Service Center Operations (SCOPS), June 2019. Total Number of Selected Petitions data, USCIS Office of Performance and Qualify (OPQ), Performance Analysis and External Reporting (PAER), July 2020.

[22] *See* U.S. Department of Labor, Employment and Training Administration, *Strengthening Wage Protections for the Temporary and Permanent Employment of Certain Aliens in the United States,* 85 FR 63872, 63874 (Oct. 8, 2020) (it is a ''largely self-evident proposition that workers in occupations that require sophisticated skills and training receive higher wages based on those skills.'').

[23] Total Number of H–1B Cap-Subject Petitions Submitted FYs 2016–2020, USCIS Service Center Operations (SCOPS), June 2019. Total Number of Selected Petitions data, USCIS Office of Performance and Qualify (OPQ), Performance Analysis and External Reporting (PAER), July 2020.

[24] *See* Muzaffar Chrishti and Stephen Yale-Loehr, Migration Policy Institute, The Immigration Act of 1990: Unfinished Business a Quarter-Century Later (July 2016), *https://www.migrationpolicy.org/sites/default/files/publications/1990-Act_2016_FINAL.pdf* (''Sponsors of [the Immigration Act of 1990 which created the H–1B program as it exists today] believed that facilitating the admission of higher-skilled immigrants would benefit the economy and increase the United States' competitive edge in attracting the 'best and the brightest' in the global labor market.'').

[25] For example, in Computer and Mathematical Occupations, the 2019 national median salary for Level I was $78,000; for Level II was $90,000; for Level III was $115,000; and for Level IV was $136,000. Department of Homeland Security, USCIS, Office of Performance and Quality, SAS PME C3 Consolidated, VIBE, DOL OFLC TLC Disclosure Data queried 9/2020 TRK 6446.

too, may the wage level, and necessarily, the corresponding prevailing wage.[26] In most cases where the proffered wage equals or exceeds the prevailing wage, a prevailing wage rate reflecting a higher wage level is a reasonable proxy for the higher level of skill required for the position, based on the way prevailing wage determinations are made. DHS recognizes, however, that some employers may choose to offer a higher proffered wage to a certain beneficiary, beyond the required prevailing wage, to be more competitive in the H–1B selection process. In that situation, while the proffered wage may not necessarily reflect the skill level required for the position in the strict sense of DOL's prevailing wage determination, the proffered wage still is a reasonable reflection of the value the employer has placed on that specific beneficiary. DHS believes that an employer who offers a higher wage than required by the prevailing wage level does so because that higher wage is a clear reflection of the beneficiary's value to the employer, which, even if not related to the position's skill level per se, reflects the unique qualities the beneficiary possesses. Accordingly, the changes made by this proposed rule would better ensure that the H–1B cap prioritizes relatively higher-skilled, higher-valued, or higher-paid foreign workers rather than continuing to allow limited cap numbers to be allocated to workers in lower-skilled or lower-paid positions.[27] Ultimately, prioritizing in the above-described manner incentivizes employers to offer higher wages or higher skilled positions to H–1B workers and disincentivizes the existing widespread use of the H–1B program to fill lower paid or lower-skilled positions, for which there may be available and qualified U.S. workers.[28]

D. Current Selection Process

DHS implemented the current H–1B registration process after determining that it could introduce a cost-saving, innovative solution to facilitate the selection of H–1B cap-subject petitions toward the annual numerical allocations. Under the current regulation, all petitioners seeking to file an H–1B cap-subject petition must first electronically submit a registration for each beneficiary on whose behalf they seek to file an H–1B cap-subject petition, unless USCIS suspends the registration requirement. A prospective petitioner whose registration is selected is eligible to file an H–1B cap-subject petition for the selected registration during the associated filing period.

USCIS monitors the number of H–1B registrations it receives during the announced registration period and, at the conclusion of that period, if more registrations are submitted than projected as needed to reach the numerical allocations, randomly selects from among properly submitted registrations the number of registrations projected as needed to reach the H–1B numerical allocations. Under this random H–1B registration selection process, USCIS first selects registrations submitted on behalf of *all* beneficiaries, including those eligible for the advanced degree exemption. USCIS then selects from the remaining registrations a sufficient number projected as needed to reach the advanced degree exemption.

A prospective petitioner whose registration is selected is notified of the selection and instructed that the petitioner is eligible to file an H–1B cap-subject petition for the beneficiary named in the selected registration within a filing period that is at least 90 days in duration and begins no earlier than 6 months ahead of the actual date of need (commonly referred to as the employment start date).[29] *See* 8 CFR 214.2(h)(8)(iii)(D)(*2*). When registration is required, a petitioner seeking to file an H–1B cap-subject petition is not eligible to file the petition unless the petition is based on a valid, selected registration for the beneficiary named in the petition.[30]

In the event that an insufficient number of registrations are received during the annual initial registration period to meet the number projected as needed to reach the numerical limitation, USCIS would select all of the registrations properly submitted during the initial registration period and notify all of the registrants that they may proceed with the filing of an H–1B cap-subject petition based on their selected registration(s). USCIS would keep the registration period open beyond the initial registration period, allowing for the submission of additional registrations, until it determined that it had received a sufficient number of registrations to reach the applicable numerical limitations.

The current selection process also allows for selection based solely on the submission of petitions in any year in which the registration process is suspended due to technical or other issues. That process also allows for random selection in any year in which the number of petitions received on the final receipt date exceeds the number projected to meet the applicable numerical limitation.

E. Wage Requirement

An H–1B petitioner must file with the Department of Labor (DOL) a Labor Condition Application for Nonimmigrant Workers (LCA) attesting, among other things, that it will pay the beneficiary a wage that is the higher of the actual wage level that it pays to all other individuals with similar experience and qualifications for the specific employment in question or the prevailing wage level for the occupational classification in the area of intended employment, and that it will provide working conditions for the beneficiary that will not adversely affect the working conditions of workers similarly employed. *See* INA section 212(n)(1)(A)(i)–(ii), 8 U.S.C. 1182(n)(1)(A)(i)–(ii), 20 CFR 655.700 through 655.760. DOL regulations state that the wage requirement includes the employer's obligation to offer benefits and eligibility for benefits provided as compensation for services to the H–1B nonimmigrant on the same basis, and in accordance with the same criteria, as the employer offers to similarly employed

[26] U.S. Department of Labor, Employment and Training Administration, *Prevailing Wage Determination Policy Guidance, Nonagricultural Immigration Programs* (Revised Nov. 2009), available at *https://www.dol.gov/sites/dolgov/files/ETA/oflc/pdfs/NPWHC_Guidance_Revised_11_2009.pdf* (noting that a wage level increase may be warranted if a position's requirements indicate skills that are beyond those of an entry level worker).

[27] *See* Costa and Hira, *supra* note 11 (pointing to data that ''all H–1B employers, but especially the largest employers, use the H–1B program *either* to hire relatively lower-wage workers (relative to the wages paid to other workers in their occupation) who possess ordinary skills *or* to hire skilled workers and pay them less than the true market value''); Norman Matloff, Barron's, ''Where are the 'Best and Brightest?' '' (June 8, 2013) *https://www.barrons.com/articles/SB50001424052748703578204578523472393388746* (''The data show that most of the foreign tech workers are ordinary folks doing ordinary work.''); Norman Matloff, Center for Immigration Studies, H–1Bs: Still Not the Best and the Brightest (May 12, 2008), *https://cis.org/Report/H1Bs-Still-Not-Best-and-Brightest* (presenting ''data analysis showing that the vast majority of the foreign workers—including those at most major tech firms—are people of just ordinary talent, doing ordinary work.'').

[28] *See id.*

[29] If the petition is based on a registration that was submitted during the initial registration period, then the beneficiary's employment start date on the petition must be October 1 of the associated FY, consistent with the registration, regardless of when the petition is filed. *See* 8 CFR 214.2(h)(8)(iii)(A)(*4*).

[30] During the initial filing period, if USCIS does not receive a sufficient number of petitions projected as needed to reach the numerical allocations, USCIS will select additional registrations, or reopen the registration process, as applicable, to receive the number of petitions projected as needed to reach the numerical allocations. *See* 8 CFR 214.2(h)(8)(iii)(A)(*7*).

U.S. workers. *See* 20 CFR 655.731(c)(3). DOL regulations additionally provide that the employer must afford working conditions to the H–1B beneficiary on the same basis and in accordance with the same criteria as it affords to its U.S. workers who are similarly employed, and without adverse effect upon the working conditions of such U.S. workers. *See* 20 CFR 655.732(a).

The LCA, certified by DOL, requires that the petitioner specify, among other information: The SOC code, the wage that an employer will pay the nonimmigrant worker, the prevailing wage rate for the job opportunity, and the source of the prevailing wage rate, including the applicable prevailing wage level for the job opportunity if the OES survey is the source of the prevailing wage rate. If there is an applicable collective bargaining agreement (CBA) that was negotiated at arms-length between a union and the employer that contains a wage rate applicable to the occupation, then the CBA must be used to determine the prevailing wage for a petitioner's job opportunity. 20 CFR 655.731(a)(2). In the absence of an applicable CBA, the petitioner generally has the option of determining the prevailing wage by one of three avenues: (1) Obtaining a Prevailing Wage Determination (PWD) issued by DOL; [31] (2) obtaining the prevailing wage from an independent authoritative source that satisfies the requirements set forth in 20 CFR 655.731(b)(3)(iii)(B); or (3) obtaining the prevailing wage from another legitimate source of wage information that satisfies the requirements set forth in 20 CFR 655.731(b)(3)(iii)(C). 20 CFR 655.731(a)(2)(ii)(A)–(C). An employer may also elect to rely on a wage determination issued pursuant to the provisions of the Davis Bacon Act (DBA), 40 U.S.C. 276a *et seq.,* or the McNamara O'Hara Service Contract Act (SCA), 41 U.S.C. 351 *et seq.,* if applicable. 20 CFR 655.731(b)(3)(i). When using the OES survey to determine the prevailing wage for a particular job opportunity, the first step is to select the most relevant occupational classification by examining the employer's job opportunity and comparing it to the tasks, knowledge, and work activities generally associated with relevant occupations to ensure that the most relevant occupational code has been selected.[32] Then, the relevant prevailing wage level is selected by comparing the requirements for the job opportunity to the occupational requirements, that is, the tasks, knowledge, skills, and specific vocational preparation (education, training, and experience) generally required for acceptable performance in that occupation.[33] DOL classifies the four prevailing wage levels as ''entry[,]'' ''qualified[,]'' ''experienced[,]'' and ''fully competent[,]'' respectively, relative to the occupation.[34]

Each registration submitted by a prospective petitioner must be based on a legitimate job offer and must list the prevailing wage level that the proffered wage equals or exceeds for the relevant SOC code and area(s) of intended employment. It is important to note that an LCA is not a requirement for registration. Each prospective petitioner must attest, when submitting a registration, that the registration is based on a legitimate job offer and that they intend to file an H–1B petition on behalf of the beneficiary named in the registration if the registration is selected. Therefore, DHS expects each prospective petitioner to know and be able to provide the relevant wage level when submitting a registration, regardless of whether they have a certified LCA at that time.

F. Proposed Rule

DHS proposes to amend the way registrations for H–1B cap-subject petitions (or petitions, if the registration process is suspended), including those eligible for the advanced degree exemption, are selected.

Specifically, DHS proposes that, if more registrations were received during the annual initial registration period (or petition filing period, if applicable) than necessary to reach the applicable numerical allocation, USCIS would rank and select the registrations (or petitions, if the registration process were suspended) received generally on the basis of the highest OES wage level that the proffered wage were to equal or exceed for the relevant SOC code and in the area of intended employment, beginning with OES wage level IV and proceeding in descending order with OES wage levels III, II, and I.[35] If the proffered wage were to fall below an OES wage level I, because the proffered wage were based on a prevailing wage from another legitimate source (other than OES) or an independent authoritative source, USCIS would rank the registration in the same category as OES wage level I.[36] During an annual initial registration period of at least 14 days, if fewer registrations than necessary to reach the regular cap were submitted, USCIS would select all registrations properly submitted during the annual initial registration period, regardless of wage level, and would continue to accept registrations until USCIS were to determine a final registration date based on the submission of a sufficient number of registrations to reach the regular cap. If more registrations were submitted on the final registration date than necessary to reach the regular cap, USCIS would rank and select registrations from among those submitted on the final registration date generally based on the highest corresponding OES wage level that the proffered wage equals or exceeds for the relevant SOC code and in the area of intended employment.

Thereafter, USCIS would complete the same ranking and selection process to meet the advanced-degree exemption. If a sufficient number of registrations were submitted during the annual initial registration period to reach the advanced-degree exemption, USCIS would rank and select registrations for beneficiaries who are eligible for the advanced-degree exemption generally on the basis of the highest OES wage level that the proffered wage equals or exceeds for the relevant SOC code and in the area of intended employment, beginning with OES wage level IV and proceeding in descending order with OES wage levels III, II, and I. During the annual initial registration period, if fewer registrations than necessary to reach the advanced-degree exemption were submitted, USCIS would select all registrations properly submitted during the annual initial registration period, regardless of wage level, and would continue to accept registrations until it were to determine a final registration date based on the submission of a sufficient number of registrations to reach the advanced-degree exemption. If more registrations were submitted on the final registration date than are needed to reach the advanced-degree exemption, USCIS would rank and select registrations from among those submitted on the final registration date generally based on the highest corresponding OES wage level that the proffered wage equals or exceeds for the

[31] U.S. Department of Labor Policy Guidance, *supra* note 26.

[32] *See id.*

[33] *See id.*

[34] *See id.*

[35] During the initial filing period, if USCIS were to receive an insufficient number of petitions projected as needed to reach the numerical allocations, USCIS would select additional registrations, or reopen the registration process, as applicable, to receive the number of petitions projected as needed to reach the numerical allocations. *See* 8 CFR 214.2(h)(8)(iii)(A)(*7*).

[36] If the proffered wage were expressed as a range, USCIS would make the comparison using the lowest wage in the range.

relevant SOC code and in the area of intended employment.

If USCIS were to receive and rank more registrations at a particular wage level than the projected number needed to meet the applicable numerical allocation, USCIS would randomly select from all registrations within that particular wage level a sufficient number of registrations needed to reach the applicable numerical limitation.

In addition to the information required on the current electronic registration form (and on the H–1B petition) and for purposes of this selection process and to establish the ranking order, a registrant (or a petitioner if registration is suspended) would be required to provide the highest OES wage level that the proffered wage equals or exceeds for the relevant SOC code in the area of intended employment.[37] The proffered wage is the wage that the employer intends to pay the beneficiary. The SOC code and area of intended employment would be indicated on the LCA filed with the petition. For registrants relying on a prevailing wage that is not based on the OES survey, if the proffered wage were less than the corresponding level I OES wage, the registrant would select the ''Wage Level I and below'' box on the registration form. If the H–1B beneficiary would work in multiple locations, or in multiple positions if the registrant is an agent, USCIS would rank and select the registration based on the lowest corresponding OES wage level that the proffered wage will equal or exceed. Therefore, the registrant would be required to specify on the registration the lowest corresponding OES wage level that the proffered wage would equal or exceed.

DHS recognizes that some occupations do not have current OES prevailing wage information available on DOL's Online Wage Library (OWL).[38] In the limited instance where there is no current OES prevailing wage information for the proffered position, the registrant would follow DOL guidance on prevailing wage determinations to determine which OES wage level to select on the registration. DOL has provided guidance on its website, and through the Foreign Labor Certification Data Center.[39] DHS expects each registrant would be able to identify the appropriate SOC code for the proffered position because all petitioners are required to identify the appropriate SOC code for the proffered position on the LCA, even when there is no applicable wage level on the LCA. Using the SOC code and the above-mentioned DOL guidance, all registrants would be able to determine the appropriate OES wage level for purposes of completing the registration, regardless of whether they were to specify an OES wage level or utilize the OES program as the prevailing wage source on an LCA.

DHS requests comments on, including potential alternatives to, the proposed ranking and selection of registrations based on the OES prevailing wage level that corresponds to the requirements of the proffered position in situations where there is no current OES prevailing wage information. More generally, DHS requests comments and seeks alternatives for selecting from among all H–1B registrations or petitions, such as ranking and selecting all registrations or petitions according to the actual OES prevailing wage level that the position would be rated at rather than the wage level that the proffered wage equals or exceeds. Another alternative for which DHS seeks public comment is a process where all registrations or petitions, while still randomly selected, would be weighted according to their OES prevailing wage level, such that, for example, a level IV position would have four times greater chance of selection than a level I position, a level III position would have three times greater chance of selection than a level I position, and a level II position would have two times greater chance of selection than a level I position.

As is currently required, the registrant would be required to attest to the veracity of the contents of the registration and petition. If USCIS were to determine that the statement of facts contained on the registration submission was inaccurate, fraudulent, materially misrepresents any fact, or was not true and correct, USCIS would reject or deny the petition or, if approved, would revoke the petition approval. USCIS also would deny a subsequent new or amended petition filed by the petitioner, or a related entity, on behalf of the same beneficiary for a lower wage level if USCIS were to determine that the filing of the new or amended petition was part of the petitioner's attempt to unfairly increase the odds of selection during the registration (or petition, if applicable) selection process.

Currently, 8 CFR 214.2(h)(8)(v) contains a severability clause explaining that the requirement to submit a registration for an H–1B cap-subject petition and the selection process based on properly submitted registrations under paragraphs (h)(8)(iii) of this section are intended to be severable from paragraph (h)(8)(iv) of this section. DHS proposes to move the content of the severability clause, without substantive change, to a new paragraph at 8 CFR 214.2(h)(24)(i).

This proposed rule would not affect the order of selection between the regular cap and the advanced degree exemption. If more registrations (or petitions, if registration were suspended) were submitted during the annual initial registration or cap-filing period than needed to reach the annual numerical allocations, the wage level ranking would occur first for the regular cap selection and then for the advanced degree exemption. *See* 8 CFR 214.2(h)(8)(iii)(A)(*6*) (establishing the order in which beneficiaries of the advanced degree exemption are selected relative to beneficiaries of the regular cap).

This proposed rule is consistent with and permissible under DHS's general statutory authority provided in INA sections 103(a), 214(a) and (c), 8 U.S.C. 1103(a), 1184(a) and (c), and HSA section 102, 6 U.S.C. 112. Congress expressly authorized DHS to determine eligibility for H–1B classification upon petition by the importing employer, and to determine the form and information required to establish eligibility. *See* INA section 214(c)(1), 8 U.S.C. 1184(c)(1). ''Moreover, INA section 214(g)(3) does not provide that petitions must be processed in the order 'received,' 'submitted,' or 'delivered.' Instead, they must be processed in the order 'filed.' What it means to 'file' a petition and how to handle simultaneously received petitions are ambiguous and were not dictated by Congress in the INA.''[40] Rather, these implementation details are entrusted for DHS to administer. So while the statute provides annual limitations on the number of aliens who may be issued initial H–1B visas or

[37] While the OES wage level assessment would be based on the SOC code, area of intended employment, and proffered wage, the registrant would not need to supply the SOC code, area of intended employment, and proffered wage at the registration stage.

[38] The Foreign Labor Certification Data Center, a component of the U.S. Department of Labor Office of Foreign Labor Certification, is the location of the Online Wage Library for prevailing wage determinations. U.S. Department of Labor, Foreign Labor Certification Data Center, Online Wage Library (last visited Oct. 27, 2020).

[39] *See* U.S. Department of Labor Policy Guidance, *supra* note 26. In general, this guidance requires an increase to a wage level whenever the employer's job offer has a requirement for education, experience (including special skills and other requirements), or supervisory duties greater than what is normally required for the occupation. This guidance also contains a worksheet (Appendix C) that registrants may use in determining the appropriate OES wage level.

[40] *See Walker Macy,* 243 F.Supp.3d at 1175.

otherwise provided H–1B nonimmigrant status, the statute does not specify how petitions must be selected and counted toward the numerical allocations when USCIS receives more petitions on the first day than are projected as needed to reach the H–1B numerical allocations. Consequently, ''Congress left to the discretion of USCIS how to handle simultaneous submissions'' and ''USCIS has discretion to decide how best to order those petitions.'' [41] In recognition of this clear discretion, DHS bears the statutory responsibility to continuously evaluate how it could best order H–1B petitions. As noted above, the current scheme of pure randomization of selectees does not optimally serve Congress' purpose for the H–1B program. Therefore, DHS proposes this rule to revise the process to better align with the purpose of the H–1B program and Congressional intent, taking into account the pervasive oversubscription of demand for registrations and petitions.

DHS acknowledges that INA section 214(g)(3), 8 U.S.C. 1184(g)(3), states that aliens subject to the H–1B numerical limitation in INA section 214(g)(1), 8 U.S.C. 1184(g)(1), shall be issued H–1B visas or otherwise provided H–1B nonimmigrant status ''in the order in which petitions are filed for such visas or status.'' Of course, this statutory provision, and more specifically the term ''filed'' as used in INA 214(g)(3), 8 U.S.C. 1184(g)(3), is ambiguous.[42] As discussed in the preamble to the *Registration Requirement for Petitioners Seeking to File H–1B Petitions on Behalf of Cap-Subject Aliens* Final Rule (H–1B Registration Final Rule), an indiscriminate application of this statutory language would lead to absurd or arbitrary results; the longstanding approach has been to project the number of petitions needed to reach the numerical allocations.[43]

DHS created the registration requirement, based on its general statutory authority and its discretion to determine how best to handle simultaneous submissions in excess of the numerical allocations, to effectively and efficiently administer the H–1B cap selection process. As provided in the H–1B Registration Final Rule, unless suspended by USCIS, registration is an antecedent procedural step that must be completed by prospective petitioners before they are eligible to file an H–1B cap-subject petition. As with the filing of petitions, and as explained above, a first-come, first-served basis for submitting electronic registrations is unreasonable and practically impossible. DHS, therefore, implemented a random selection process as that was considered a reasonable and operationally efficient way to select registrations when more registrations were submitted than projected as needed to reach the numerical allocations.

While the random selection of petitions or registrations is reasonable, it is neither the optimal nor the exclusive method of selecting petitions or registrations toward the numerical allocations when more registrations or petitions, as applicable, are submitted than projected as needed to reach the numerical allocations.

In that vein, prioritization and selection based on wage levels ''is a reasonable and rational interpretation of USCIS's obligations under the INA to resolve the issues of processing H–1B petitions'' [44] in years of excess demand. The changes proposed by this rule would aid petitioners by maintaining the effective and efficient administration of the cap selection process while providing prospective petitioners the ability to potentially improve their chance of selection by agreeing to pay H–1B beneficiaries higher wages that equal or exceed higher prevailing wage levels. Further, while nothing in the proposed rule would prohibit an employer from offering from offering a wage commensurate with a lower wage level with a reduced chance of selection, these proposed changes would incentivize petitioners to offer higher wages to H–1B workers or petition for positions requiring higher skills and higher-skilled aliens that are commensurate with higher wage levels.[45] Specifically, data reflects that, during FYs 2018 and 2019, 59.43 percent of H–1B petitions received were filed for level II and I wages.[46] Conversely, the data shows that only 28.53 percent of H–1B petitions received in FYs 2018 and 2019 were filed for level IV and III wages.[47] As registrations now would be selected in descending order from level IV to level I and below, as indicated by the highest wage level that the proffered wage equals or exceeds for the relevant SOC code and in the area of intended employment, the selection of registrations with proffered wages that correspond to higher wage levels is expected to incentivize higher wages, reduce the adverse effect on similarly employed U.S. workers, and prevent further stagnation of wages for U.S. information technology (IT) workers generally.[48] DHS further believes that prioritizing according to wage level would better meet the directive of the *Buy American and Hire American* Executive order to ''help ensure that H–1B visas are awarded to the most-skilled or highest-paid petition beneficiaries.'' [49]

Beyond negatively impacting U.S. workers' wages, in some circumstances, U.S. employers are replacing qualified and skilled U.S. workers with relatively lower-skilled H–1B workers. U.S. companies such as The Walt Disney Company, Hewlett-Packard, University

[41] *Id.* at 1176.

[42] *Id.* at 1167–68 (finding that USCIS's rule establishing the random-selection process was a reasonable interpretation of the INA that was entitled at least to *Skidmore* deference because what it means to ''file'' a petition is ambiguous and undefined under the INA and that Congress left to the discretion of USCIS how to handle simultaneous submissions. Specifically, the court said: ''Additionally, because § 1184(g)(3) was passed by Congress in 1990 when there was not widespread public use of electronic submissions, it is logical that Congress anticipated H–1B petitions would be submitted either by U.S. mail or other carriers. Thus, *it was reasonable to anticipate multiple petitions would arrive on the same day. It is therefore a reasonable interpretation of 'filed' to include some further administrative step beyond mere receipt at a USCIS office to 'order' multiple petitions that arrived in such a manner on the same day.*'') (emphasis added). The availability of electronic submission of H–1B registrations has not alleviated this issue as multiple registrations can still be submitted simultaneously.

[43] *See* 84 FR 888, 896.

[44] *Id.* at 1175.

[45] *See supra* notes 5 and 13. *See also* U.S. Department of Homeland Security, U.S. Citizenship and Immigration. Services, Office of Policy and Strategy, Policy Research Division, *H–1B Petitions for Nonimmigrant Worker (I–129) DOL H–1B Cases broken down by Fiscal Year and Wage Level As of July 31, 2020,* Database Queried: Aug. 17, 2020, Report Created: Aug. 17, 2020, Systems: DOL OFLC Performance DATA H1B for 2015, 2017 (showing that, for FYs 2015 and 2017, respectively, 79% and 64% of certified LCAs were for level I and II wages).

[46] *See* U.S. Department of Homeland Security, U.S. Citizenship and Immigration. Services, Office of Policy and Strategy, Policy Research Division, *H1B Petitions for Non Immigrant Worker (I–129) Summarized by IT (SOC code 15) and Other by Wage Level As of August 28, 2020,* Database Queried: Aug. 28, 2020, Report Created: Aug. 28, 2020, Systems: C3 via SASPME, DOL OFLC Performance DATA H1B for 2018, 2019 (reflecting total received H–1B petitions categorized by wage levels as follows: 13.2% for level I, 46.23% for level II, 17.85% for level III, 10.68% for level IV, and a combined 12.03% for N/A and blank wage levels).

[47] *See id.*

[48] Hal Salzman, Daniel Kuehn, and B. Lindsay Lowell, Economic Policy Institute, *Guestworkers in the High-Skill U.S. Labor Market: An analysis of supply, employment, and wage trends,* (Apr. 24, 2013), at 27, *https://files.epi.org/2013/bp359-guestworkers-high-skill-labor-market-analysis.pdf.* (''In other words, the data suggest that current U.S. immigration policies that facilitate large flows of guestworkers appear to provide firms with access to labor that will be in plentiful supply at wages that are too low to induce a significantly increased supply from the domestic workforce.'').

[49] *See* Executive Order 13788, *supra* note 1.

of California San Francisco, Southern California Edison, Qualcomm, and Toys ''R'' Us have reportedly laid off their qualified U.S. workers and replaced them with H–1B workers provided by H-1B dependent outsourcing companies.[50] As one longtime IT worker said, ''They are bringing in people with a couple of years' experience to replace us and then we have to train them.'' [51] The change in the selection process is expected to help militate against this kind of practice by reducing the influx of cap-subject H–1B workers for lower-paid positions.

DHS acknowledges that the preamble to the H–1B Registration Final Rule states that prioritization of registration selection on factors other than degree level, such as salary, would require statutory changes.[52] However, DHS did not provide further analysis regarding that conclusion. Upon further review and consideration of the issue initially raised in comments to the H–1B Registration Proposed Rule (83 FR 62406, December 3, 2018), DHS concludes that the statute is silent as to how USCIS must select H–1B petitions, or registrations, to be filed toward the numerical allocations in years of excess demand. DHS, therefore, is relying on its general statutory authority to implement the statute and proposes to revise the regulations to design a selection system that realistically, effectively, efficiently, and more faithfully administers the cap selection process. *See* INA section 103(a), 214(a) and (c)(1), 8 U.S.C. 1103(a), 1184(a) and (c)(1).

DHS understands that some petitioners have adjusted their recruitment and filing practices to file a high number of petitions or registrations, for varied beneficiaries, based on a concern that only a random selection of the H–1B cap-subject petitions or registrations that they have submitted would be selected and accepted for processing in years of excess demand. While some petitioners might prefer to continue to rely on a random selection process, DHS believes that the importance of prioritizing selection generally based on the highest prevailing wage level that a proffered wage equals or exceeds outweighs any reliance interests of petitioners in a random H–1B cap selection process. A random selection process may seem fair to petitioners seeking to obtain H–1B classification for relatively lower-paid H–1B workers, as the chance for selection of an H–1B worker who will be paid an entry level wage is the same as the chance of selection for an H–1B worker who will be paid at the highest wage level for the occupational classification, but this system is neither optimally consistent with the statute passed by Congress nor fair to U.S. workers whose wages may be adversely impacted by an influx of relatively lower-paid H–1B workers. Similarly, it is not fair to U.S. employers that are seeking to petition for foreign workers at higher OES prevailing wage levels and are not selected due to the random lottery process. Further, it is not fair to an employer who has petitioned for a foreign worker at the top of the prevailing wage level for many years and has never obtained a visa, while another employer who petitioned for an entry-level worker for the first time and, due to randomness or luck, obtained a visa.[53] Selecting registrations (or petitions, if registration were suspended) generally based on the highest prevailing wage level that a proffered wage equals or exceeds would give petitioners greater ability to control the chance of selection in years of excess demand for H–1B visa numbers by agreeing to pay the H–1B beneficiary a higher wage, further protecting the economic interests of U.S. workers.

While DHS proposes to move away from a random selection process in order to better align with the intent of Congress to protect the interests of U.S. workers, H–1B workers, and petitioners, DHS nonetheless proposes to preserve an aspect of random selection within the applicable prevailing wage level—as discussed elsewhere in this rule. Namely, if USCIS were to receive and rank more registrations (or petitions in any year in which the registration process is suspended) at a particular prevailing wage level than the projected number needed to meet the numerical limitation, USCIS would randomly select from all registrations (or petitions, if applicable) within that particular prevailing wage level a sufficient number of registrations necessary to reach the H–1B numerical limitation. DHS believes that the interests of those relying on the current random selection process do not outweigh the need to establish a selection process that is efficient and effective, but also fair to U.S. workers, H–1B workers, and petitioners.

IV. Statutory and Regulatory Requirements

A. Executive Orders 12866 (Regulatory Planning and Review), Executive Order 13563 (Improving Regulation and Regulatory Review), and Executive Order 13771 (Reducing Regulation and Controlling Regulatory Costs)

Executive Orders (E.O.) 12866 and 13563 direct agencies to assess the costs, benefits, and transfers of available alternatives, and if regulation is necessary, to select regulatory approaches that maximize net benefits (including potential economic, environmental, public health and safety effects, distributive impacts, and equity). E.O. 13563 emphasizes the importance of quantifying both costs and benefits, of reducing costs, of harmonizing rules, and of promoting flexibility.

This proposed rule is an ''economically significant regulatory action'' under section 3(f)(1) of Executive Order 12866. Accordingly, the Office of Management and Budget (OMB) has reviewed this regulation.

1. Summary of Economic Effects

DHS is proposing to amend its regulations governing the selection of registrants eligible to file H–1B cap-subject petitions, which includes petitions subject to the regular cap and those asserting eligibility for the advanced degree exemption, to allow for ranking based on OES wage levels corresponding to their SOC codes. USCIS would rank and select the registrations received (or petitions in any year in which the registration process is suspended) generally on the basis of the highest OES wage level that the proffered wage were to equal or exceed for the relevant SOC code and in the area of intended employment.

[50] *See* Sarah Pierce and Julia Gelatt, Migration Policy Institute, *Evolution of the H–1B: Latest Trends in a Program on the Brink of Reform* (Mar. 2018), at 24, *https://www.migrationpolicy.org/research/evolution-h-1b-latest-trends-program-brink-reform;* Ron Hira and Bharath Gopalaswamy, Atlantic Council, *Reforming US' High-Skilled Guestworker Program* (2019), available at *https://www.atlanticcouncil.org/in-depth-research-reports/report/reforming-us-high-skilled-immigrationprogram/;* Patrick Thibodeau, *Southern California Edison IT Workers ''Beyond Furious'' Over H–1B Replacements,* Computerworld, Feb. 4, 2015, available at *https://www.computerworld.com/article/2879083/southern-california-edison-it-workers-beyond-furious-over-h-1b-replacements.html.*

[51] Thibodeau, *supra* note 50.

[52] *See* Registration Final Rule, *supra* note 7.

[53] *See Walker Macy,* 243 F.Supp.3d at 1170.

USCIS would begin with OES wage level IV and proceed in descending order with OES wage levels III, II, and I. DHS proposes to amend the relevant sections of DHS regulations to reflect these changes.

The described change in selection is expected to result in a different allocation of H–1B visas favoring petitioners that proffer relatively higher wages. In the analysis that follows, DHS presents its best estimate for how H–1B petitioners would be affected by and would respond to the increased probability of selection of petitioners proffering the highest wages for a given occupation and area of employment. Because of the uncertainty and difficulty of quantifying the aggregate costs that each employer may incur as a result of the provisions of the proposed rule discussed in the sections that follow, OMB has designated the proposed rule as ''economically significant.'' DHS estimates the net costs that would result from this proposed rule compared to the baseline of the H–1B visa program. For the 10-year implementation period of the rule, DHS estimates the annualized costs to the public would be $15,970,315 annualized at 3-percent, and $16,091,293 annualized at 7-percent.

Table 1 provides a more detailed summary of the proposed rule provisions and their impacts.

TABLE 1—SUMMARY OF PROVISIONS AND ECONOMIC IMPACTS OF THE PROPOSED RULE

Provision	Description of changes to provision	Estimated costs of provisions	Estimated benefits of provisions
Currently USCIS randomly selects H–1B registrations or cap-subject petitions, as applicable. USCIS proposes to change the selection process to prioritize selection of registrations or cap-subject petitions, as applicable, based on corresponding OES wage level.. DHS regulations currently address H–1B cap allocation in various contexts:. 1. Fewer registrations than needed to meet the H–1B regular cap. 2. Sufficient registrations to meet the H–1B regular cap during the initial registration period. 3. Fewer registrations than needed to meet the H–1B advanced degree exemption numerical limitation. 4. Sufficient registrations to meet the H–1B advanced degree exemption numerical limitation during the initial registration period. 5. Increase to the number of registrations projected to meet the H–1B regular cap or advanced degree exemption allocations in a FY. 6. H–1B cap-subject petition filing following registration—(1) Filing procedures. 7. Petition-based cap-subject selections in event of suspended registration process. 8. Denial of petition ..... 9. Revocation of approval of petition.	USCIS proposes to rank and select H–1B registrations (or H–1B petitions if the registration requirement were suspended) generally based on the highest OES wage level that the proffered wage were to equal or exceed for the relevant SOC code and area(s) of intended employment. This proposed rule would add instructions and a question to the registration form to select the appropriate wage level. This proposed rule also would add instructions and questions to the H–1B petition seeking the same wage level information and other information concerning the proffered position to assess the prevailing wage level. This proposed rule would not affect the order of selection as between the regular cap and the advanced degree exemption. If USCIS were to receive and rank more registrations at a particular wage level than the projected number needed to meet the numerical limitation, USCIS would randomly select from all registrations within that particular wage level a sufficient number of registrations needed to reach the numerical limitation. USCIS would be authorized to deny a subsequent new or amended petition filed by the petitioner, or a related entity, on behalf of the same beneficiary for a lower wage level if USCIS were to determine that the new or amended petition was filed to reduce the wage level listed on the original petition to unfairly increase the odds of selection during the registration selection process. In any year in which USCIS were to suspend the H–1B registration process for cap-subject petitions, USCIS would, instead, allow for the submission of H–1B cap-subject petitions. After USCIS were to receive a sufficient number of petitions to meet the H–1B regular cap and were to complete the selection process of petitions for the H–1B regular cap following the same method of ranking and selection based on corresponding OES wage level, USCIS would determine whether there was a sufficient number of remaining petitions to meet the H–1B advanced degree exemption numerical limitation.	*Quantitative:* Petitioners— • $3,457,401 costs annually for petitioners completing and filing Form I–129H1 petitions with an additional time burden of 15 minutes. • $11,797,520 costs annually for prospective petitioners submitting electronic registrations with an additional time burden of 20 minutes. DHS/USCIS— • None. *Qualitative:* Petitioners— • Petitioners may incur costs to seek out and train other workers, or to induce workers with similar qualifications to consider changing industry or occupation. • Petitioners that would have hired relatively low-paid H–1B workers, but were unable to do so because of non-selection (and ineligibility to file petitions), may incur reduced labor productivity and revenue. • Petitioners may incur costs from offering beneficiaries higher wages for the same work to achieve greater chances of selection. DHS/USCIS— • None.	*Quantitative:* Petitioners— • None. DHS/USCIS— • None. *Qualitative:* U.S. Workers— • A possible increase in employment opportunities for lower-skilled unemployed or underemployed U.S. workers seeking employment in positions otherwise offered to H–1B cap-subject beneficiaries at wage levels corresponding to lower wage positions. H–1B Workers— • A possible increase in productivity, measured in increased H–1B wages, resulting from the reallocation of a fixed number of visas from positions classified as lower-level work to employers able to pay the highest wages for the most highly skilled workers. • A possible increase in wages for positions offered to H–1B cap-subject beneficiaries for the same work to improve the prospective petitioner's chance of selection. Petitioners— • Level I and level II beneficiaries may see increased wages. Companies who have historically paid level I wages may be incentivized to offer their H–1B employees higher wages, so that they could have a greater chance of selection at a level II or higher. • Employers who offer H–1B workers wages that corresponds with level III or level IV OES wages may have higher chances of selection. DHS/USCIS— • Submitting additional wage level information on both an electronic registration and on Form I–129H1 would allow USCIS to maintain the integrity of the H–1B cap selection and adjudication processes. • Registrations or petitions, as applicable, would be more likely to be selected under the numerical allocations for the highest paid, and presumably highest skilled or highest-valued, beneficiaries.
Familiarization Cost	Familiarization costs comprise the opportunity cost of the time spent reading and understanding the details of a rule to fully comply with the new regulation(s).	*Quantitative:* Petitioners— • One-time cost of $6,285,527 in FY2022. DHS/USCIS— • None. *Qualitative:* Petitioners— • None. DHS/USCIS— • None.	*Quantitative:* Petitioners— • None. DHS/USCIS— • None. *Qualitative:* Petitioners— • None. DHS/USCIS— • None.

In addition to the impacts summarized here, Table 2 presents the accounting statement as required by OMB Circular A–4.[54]

TABLE 2—OMB A–4 ACCOUNTING STATEMENT

[$, 2019 for FY 2022–FY 2032]

Category	Primary estimate	Minimum estimate	Maximum estimate	Source citation
Benefits				
Annualized Monetized Benefits over 10 years (discount rate in parenthesis).	N/A	N/A	N/A	
	N/A	N/A	N/A	
Annualized quantified, but unmonetized, benefits.	0	0	0	
Unquantified Benefits	This proposed rule would benefit petitioners agreeing to pay H–1B workers a proffered wage corresponding to OES wage level III or IV, by increasing their chance of selection in the H–1B cap selection process. These proposed changes align with the Administration's goals of improving policies such that the H–1B classification would more likely be awarded to the highest paid or highest skilled beneficiaries. This proposed rule may provide increased opportunities for lower-skilled U.S. workers in the labor market to compete for work as there would be fewer H–1B workers paid at the lower wage levels to compete with U.S. workers.[55] Further, assuming demand outpaces the 85,000 visas currently available for annual allocation, DHS believes that the potential reallocation of visas to favor those petitioners able to offer the highest wages to recruit the most highly skilled workers would result in increased marginal productivity of all H–1B workers. This proposed rule may provide increased wages for positions offered to H–1B cap-subject beneficiaries.			RIA.
Costs				
Annualized monetized costs over 10 years (discount rate in parenthesis).	(3 percent) $15,970,315	N/A	N/A	RIA.
	(7 percent) $16,091,293	N/A	N/A	
Annualized quantified, but unmonetized, costs.	N/A			
Qualitative (unquantified) costs	This proposed rule is expected to reduce the number of petitions for lower wage H–1B workers. This may result in increased recruitment or training costs for petitioners that seek new pools of talent. Additionally, petitioners' labor costs or training costs for substitute workers may increase. DHS also acknowledges that some petitioners might be impacted in terms of the employment, productivity loss, search and hire cost per employer of $4,398, and profits resulting from labor turnover. In cases where companies cannot find reasonable substitutions for the labor the H–1B beneficiary would have provided, affected petitioners would also lose profits from the lost productivity. In such cases, employers would incur opportunity costs by having to choose the next best alternative to immediately filling the job the prospective H–1B worker would have filled. There may be additional opportunity costs to employers such as search costs and training. Such possible disruptions to companies would depend on the interaction of a number of complex variables that are constantly in flux, including national, state, and local labor market conditions, economic and business factors, the type of occupations and skills involved, and the substitutability between H–1B workers and U.S. workers. Petitioners that would have hired relatively lower-paid H–1B workers, but were unable to do so because of non-selection (and ineligibility to file a petition), may incur reduced labor productivity and revenue.			RIA.
Transfers				
Annualized monetized transfers: "on budget".	N/A	N/A	N/A	
From whom to whom?				
Annualized monetized transfers: "off-budget".	N/A	N/A	N/A	
From whom to whom?	N/A	N/A	N/A	
Miscellaneous analyses/ category	Effects			Source citation
Effects on state, local, and/or tribal governments.	N/A			RFA.
Effects on small businesses	N/A			RFA.
Effects on wages	N/A			None.
Effects on growth	N/A			None

[54] White House, Office of Management and Budget, *Circular A–4* (Sept. 17, 2003), available at *https://www.whitehouse.gov/sites/whitehouse.gov/files/omb/circulars/A4/a-4.pdf* (last visited Aug. 11, 2020).

2. Background and Purpose of the Proposed Rule

The H–1B visa program allows U.S. employers to temporarily hire foreign workers to perform services in a specialty occupation, services related to a Department of Defense (DOD) cooperative research and development project or coproduction project, or services of distinguished merit and ability in the field of fashion modeling. *See* INA section 101(a)(15)(H)(i)(b), 8 U.S.C. 1101(a)(15)(H)(i)(b); Public Law 101–649, section 222(a)(2), 104 Stat. 4978 (Nov. 29, 1990); 8 CFR 214.2(h). A specialty occupation is defined as an occupation that requires the (1) theoretical and practical application of a body of highly specialized knowledge and (2) attainment of a bachelor's or higher degree in the specific specialty (or its equivalent) as a minimum qualification for entry into the occupation in the United States. *See* INA section 214(i)(1), 8 U.S.C. 1184(i)(1).

The number of aliens who may be issued initial H–1B visas or otherwise provided initial H–1B nonimmigrant status during any FY has been capped at various levels by Congress over time, with the current numerical limit generally being 65,000 per FY. *See* INA section 214(g)(1)(A); 8 U.S.C. 1184(g)(1)(A). Congress has also provided for various exemptions from the annual numerical allocations, including an exemption for 20,000 aliens who have earned a master's or higher degree from a U.S. institution of higher education. *See* INA section 214(g)(5) and (7); 8 U.S.C. 1184(g)(5) and (7).

Under the current regulation, all petitioners seeking to file an H–1B cap-subject petition must first electronically submit a registration for each beneficiary on whose behalf they seek to file an H–1B cap-subject petition, unless USCIS suspends the registration requirement.[56] USCIS monitors the number of H–1B registrations submitted during the announced registration period of at least 14 days and, at the conclusion of that period, if more registrations are submitted than projected as needed to reach the numerical allocations, randomly selects from among properly submitted registrations the number of registrations projected as needed to reach the H–1B numerical allocations.[57] Under this random H–1B registration selection process, USCIS first selects registrations submitted on behalf of *all* beneficiaries, including those eligible for the advanced degree exemption. USCIS then selects from the remaining registrations a sufficient number projected as needed to reach the advanced degree exemption. A prospective petitioner whose registration is selected is notified of the selection and instructed that the petitioner is eligible to file an H–1B cap-subject petition for the beneficiary named in the selected registration within a filing period that is at least 90 days in duration and begins no earlier than 6 months ahead of the actual date of need (commonly referred to as the employment start date).[58] When registration is required, a petitioner seeking to file an H–1B cap-subject petition is not eligible to file the petition unless the petition is based on a valid, selected registration for the beneficiary named in the petition.[59]

Prior to filing an H–1B petition, the employer is required to obtain a certified Labor Condition Application (LCA) from the Department of Labor (DOL).[60] The LCA form collects information about the employer and the occupation for the H–1B worker(s). The LCA requires certain attestations from the employer, including, among others, that the employer will pay the H–1B worker(s) at least the required wage.[61] This proposed rule amends DHS regulations concerning the selection of registrations submitted by or on behalf of prospective petitioners seeking to file H–1B cap-subject petitions (or the selection of petitions, if the registration process is suspended), which includes petitions subject to the regular cap and those asserting eligibility for the advanced degree exemption, to allow for ranking and selection based on OES wage levels. When applicable, USCIS would rank and select the registrations received generally on the basis of the highest OES wage level that the proffered wage were to equal or exceed for the relevant SOC code and in the area(s) of intended employment, beginning with OES wage level IV and proceeding in descending order with OES wage levels III, II, and I.[62] For registrants relying on a private wage survey, if the proffered wage were less than the corresponding level I OES wage, the registrant would select the ''Wage Level I and below'' box on the registration form.[63] If USCIS were to receive and rank more registrations at a particular wage level than the projected number needed to meet the applicable numerical allocation, USCIS would randomly select from all registrations within that wage level a sufficient number of registrations needed to reach the applicable numerical limitation.[64]

3. Historic Population

The historic population consists of petitioners who file on behalf of H–1B cap-subject beneficiaries (in other words, beneficiaries who are subject to the annual numerical limitation, including those eligible for the advanced degree exemption). DHS uses the 5-year average of H–1B cap-subject petitions received for FYs 2016 to 2020 (211,797) as the historic estimate of H–1B cap-subject petitions that were submitted annually.[65] Prior to publication of *U.S. Citizenship and Immigration Services Fee Schedule and Changes to Certain Other Immigration Benefit Request Requirements* (Fee Schedule Final Rule),[66] H–1B petitioners submit Form I–129 with applicable supplements for H–1B

[55] DHS acknowledges, however, that some employers may increase the wages of existing H–1B workers without changing job requirements or requiring higher levels of education, skills, training, and experience. In those cases, there may not be anticipated vacancies at wage levels I and II for U.S. workers to fill.

[56] *See* 8 CFR 214.2(h)(8)(iii)(A).

[57] *See id.* at § 214.2(h)(8)(iii)(A)(*5*)–(*6*).

[58] *See* 8 CFR 214.2(h)(8)(iii)(D)(*2*).

[59] *See id.* at § 214.2(h)(8)(iii)(A)(*1*).

[60] *See* 8 CFR 214.2(h)(4)(i)(B).

[61] *See* 20 CFR 655.731 through 655.735.

[62] *See* new 8 CFR 214.2(h)(8)(iii)(A)(*1*)(*i*).

[63] *Id.*

[64] *See* 8 CFR 214.2(h)(8)(iii)(A)(*5*)–(*6*).

[65] In FY 2018, 198,460 H–1B petitions were submitted in the first five days that cap-subject petitions could be submitted, a 16 percent decline in H–1B cap-subject petitions from FY 2017. Though the receipt of H–1B cap-subject petitions fell in FY 2018, the petitions received still far exceeded the numerical limitations, continuing a trend of excess demand since FY 2011. For H–1B filing petitions data prior to FY 2014, *see* U.S. Department of Homeland Security, U.S. Citizenship and Immigration Services, *Reports and Studies, https://www.uscis.gov/tools/reports-studies/reports-and-studies* (last visited Sept. 2, 2020).

[66] DHS estimates the costs and benefits of this proposed rule using the newly published *U.S. Citizenship and Immigration Services Fee Schedule and Changes to Certain Other Immigration Benefit Request Requirements,* final rule (Fee Schedule Final Rule), and associated form changes, as the baseline. 85 FR 46788 (Aug. 3, 2020). The Fee Schedule Final Rule was scheduled to go into effect on October 2, 2020. On September 29, 2020, the U.S. District Court for the Northern District of California issued a nationwide injunction, which prevents DHS from implementing the Fee Schedule Final Rule. *See, Immigrant Legal Resource Center* v. *Wolf,* No. 4:20–cv–5883 (N.D. Cal. Sept. 29, 2020). In addition, on October 8, 2020, DHS was also preliminarily enjoined from implementing and enforcing the Fee Schedule Final Rule by the U.S. District Court for the District of Columbia, including by adopting any form changes associated with the rule. See, *Northwest Immigrant Rights Project* v. *U.S. Citizenship and Immigration Servs.,* 1:19–cv–03283–RDM (D.D.C. Oct. 8, 2020). DHS intends to vigorously defend these lawsuits and is not changing the baseline for this proposed rule as a result of the litigation. Should DHS not prevail in the Fee Schedule Final Rule litigation, this proposed rule may reflect overstated transfers, costs, and opportunity costs associated with the filing of the Form I–129.

petitions. Through the Fee Schedule Final Rule, DHS created a new Form I–129H1 for H–1B petitioners.[67] Form I–129H1 does not include separate supplements as relevant data collection fields have been incorporated into Form I–129H1. DHS assumes that the number of petitioners who previously filled out the Form I–129 and H–1B supplements is the same as the number of petitioners who would complete the new Form I–129H1.

TABLE 3H–1B CAP-SUBJECT PETITIONS SUBMITTED TO USCIS FOR FY 2016—FY 2020

Fiscal year	Total number of H–1B cap-subject petitions submitted	Total number of H–1B petitions selected	Number of petitions filed with Form G–28
2016	232,973	97,711	72,292
2017	236,444	95,818	68,743
2018	198,460	95,923	78,900
2019	190,098	110,376	93,495
2020	201,011	109,283	92,396
Total	1,058,986	509,111	405,826
5-year average	211,797	101,822	81,165

Source: Total Number of H–1B Cap-Subject Petitions Submitted FYs 2016–2020, USCIS Service Center Operations (SCOPS), June 2019. Total Number of Selected Petitions data, USCIS Office of Performance and Qualify (OPQ), Performance Analysis and External Reporting (PAER), July 2020.

Table 3 also shows historical Form G–28 filings by attorneys or accredited representatives accompanying selected H–1B cap-subject petitions. DHS notes that these forms are not mutually exclusive. Based on the 5-year average, DHS estimates 79.7 percent[68] of selected petitions will be filed with a Form G–28. Table 3 does not include data for FY 2021 as the registration requirement was first implemented for the FY 2021 H–1B cap selection process, and petition submission remains ongoing as of the publication of this proposed rule.

The H–1B selection process changed significantly after the publication of the H–1B Registration Final Rule.[69] That rule established a mandatory electronic registration requirement that requires petitioners seeking to file cap-subject H–1B petitions, including those eligible for the advanced degree exemption, to first electronically register with USCIS during a designated registration period. That rule also reversed the order by which USCIS counts H–1B registrations (or petitions, for any year in which the registration requirement is suspended) toward the number projected to meet the H–1B numerical allocations, such that USCIS first selects registrations submitted on behalf of all beneficiaries, including those eligible for the advanced degree exemption. USCIS then selects from the remaining registrations a sufficient number projected as needed to reach the advanced degree exemption. The registration requirement was first implemented for the FY 2021 H–1B cap. During the initial registration period for the FY 2021 H–1B cap selection process, DHS received 274,273 registrations.

4. Cost-Benefit Analysis

Through these proposed changes, petitioners would incur costs associated with additional time burden in completing the registration process and, if selected for filing, the petition process. In this analysis, DHS estimates the opportunity cost of time for these occupations using average hourly wage rates of $32.58 for HR specialists and $69.86 for lawyers.[70] However, average hourly wage rates do not account for worker benefits such as paid leave, insurance, and retirement. DHS accounts for worker benefits when estimating the opportunity cost of time by calculating a benefits-to-wage multiplier using the most recent DOL, BLS report detailing average compensation for all civilian workers in major occupational groups and industries. DHS estimates the benefits-to-wage multiplier is 1.46.[71] For purposes of this proposed rule, DHS calculates the average total rate of compensation as $47.57 per hour for an HR specialist, where the average hourly wage is $32.58 per hour worked and average benefits are $14.99 per hour.[72] Additionally, DHS calculates the average total rate of compensation as $102.00 per hour for an in-house lawyer, where the average hourly wage is $69.86 per hour worked and average benefits are $32.14 per hour.[73] Moreover, DHS recognizes that a firm may choose, but is not required, to outsource the preparation and submission of registrations and filing of H–1B petitions to outsourced lawyers.[74] Therefore, DHS calculates the average total rate of compensation as $174.65, which is the average hourly U.S. wage rate for lawyers multiplied by 2.5 to approximate an hourly billing rate for an outsourced lawyer.[75]

[67] *See* Fee Schedule Final Rule, *supra* note 66.

[68] Calculation: 81,165 Forms G–28/101,822 Form I–129 petitions = 79.7 percent.

[69] *See* Registration Final Rule, *supra* note 7.

[70] *See* U.S. Department of Labor, Bureau of Labor Statistics, Occupational Employment Statistics, May 2019 National Occupational Employment and Wage Estimates-National, *SOC 13–1071—Human Resources Specialist* and *SOC 23–1011—Lawyers, https://www.bls.gov/oes/2019/may/oes_nat.htm* (last visited Sept. 2, 2020).

[71] The benefits-to-wage multiplier is calculated as follows: ($37.10 Total Employee Compensation per hour) ÷ ($25.47 Wages and Salaries per hour) = 1.457 = 1.46 (rounded). *See* U.S. Department of Labor, Bureau of Labor Statistics, Economic News Release, *Employer Cost for Employee Compensation (December 2019), Table 1. Employer Costs for Employee Compensation by ownership* (Dec. 2019), *https://www.bls.gov/news.release/archives/ecec_03192020.pdf* (last visited Sept. 2, 2020).

[72] Calculation of the weighted mean hourly wage for HR specialists: $32.58 per hour × 1.46 = $47.5668 = $47.57 (rounded) per hour.

[73] Calculation of weighted mean hourly wage for in-house lawyers: $102.00 average hourly total rate of compensation for in-house lawyer = $69.86 average hourly wage rate for lawyer (in-house) × 1.46 benefits-to-wage multiplier.

[74] DHS uses the terms ''in-house lawyer'' and ''outsourced lawyer'' to differentiate between the types of lawyers that may file Form I–129H1 on behalf of an employer petitioning for an H–1B beneficiary.

[75] Calculation of weighted mean hourly wage for outside counsel: $174.65 average hourly total rate of compensation for outsourced lawyer = $69.86 average hourly wage rate for lawyer (in-house) × 2.5 conversion multiplier. DHS uses a conversion multiplier of 2.5 to estimate the average hourly wage rate for outsourced lawyer based on the hourly wage rate for an in-house lawyer. DHS has used this conversion multiplier in various previous rulemakings. The DHS analysis in *Exercise of Time-Limited Authority to Increase the Fiscal Year 2018 Numerical Limitation for the H–2B Temporary Nonagricultural Worker Program,* 83 FR 24905 (May 31, 2018), used a multiplier of 2.5 to convert in-house attorney wages to the cost of outsourced attorney wages.

Table 4 summarizes the compensation rates used in this analysis.

TABLE 4—SUMMARY OF ESTIMATED WAGES FOR FORM I–129H1 FILERS BY TYPE OF FILER

	Hourly compensation rate
Human Resources (HR) Specialist	$47.57
In-house lawyer	102.00
Outsourced lawyer	174.65

Source: USCIS analysis.

i. Costs and Cost Savings of Regulatory Changes to Petitioners

a. Methodology Based on Historic FYs 2019–2020

This proposed rule primarily would change the manner in which USCIS selects H–1B registrations (or H–1B petitions for any year in which the registration requirement were suspended), by first selecting registrations generally based on the highest OES wage level that the proffered wage were to equal or exceed for the relevant SOC code and area(s) of intended employment. In April 2019, DHS added a registration requirement for petitioners seeking to file H–1B petitions on behalf of cap-subject aliens.[76] Under the current regulation, all petitioners seeking to file an H–1B cap-subject petition must first electronically submit a registration for each beneficiary on whose behalf they seek to file an H–1B cap-subject petition, unless the registration requirement is suspended. If the registration is selected, the petitioner is eligible to file an H–1B cap-subject petition for the beneficiary named in the selected registration during the associated filing period. The registration requirement was suspended for the FY 2020 H–1B cap and first implemented for the FY 2021 H–1B cap. The initial H–1B registration period for the FY 2021 H–1B cap was March 1, 2020, through March 20, 2020. A total of 274,273 registrations were submitted during the initial registration period, of which 123,244[77] registrations were for beneficiaries eligible for the advanced degree exemption and 145,950 were for beneficiaries under the regular cap.[78]

Prior to implementing the registration requirement, USCIS administered the H–1B cap by projecting the number of petitions needed to reach the numerical allocations. H–1B cap-subject petitions were randomly selected when the number of petitions received on the final receipt date exceeded the number projected as needed to reach the numerical allocations. All petitions eligible for the advanced degree exemption had an equal chance of being selected toward the advanced degree exemption, and all remaining petitions had an equal chance of being selected toward the regular cap. In FY 2019, USCIS first selected petitions toward the number of petitions projected as needed to reach advanced degree exemption. If the petition was not selected under the advanced degree exemption, those cases were then added back to the pool and had a second chance for selection under the regular cap. In FY 2020, the selection order was reversed, such that USCIS first selected petitions toward the number projected as needed to reach the regular cap from among all petitions received. USCIS then selected toward the number of petitions projected as needed to reach the advanced degree exemption from among those petitions eligible for the advanced degree exemption, but that were not selected under the regular cap.

Table 5 shows the number of petitions submitted and selected in FYs 2019 and 2020. It also displays the approximated 2-year averages of the petitions that were submitted and selected for the H–1B regular cap or advanced degree exemption. On average, DHS selected 56 percent[79] of the H–1B cap-subject petitions submitted, with 82,900 toward the regular cap and 26,930 toward the advanced degree exemption.

TABLE 5—H–1B CAP-SUBJECT PETITIONS SUBMITTED TO USCIS, FOR FY 2019—FY 2020.

Fiscal year	Total number of H–1B cap-subject petitions submitted	Total petitions selected	Regular cap	Advanced degree exemption
2019	190,098	110,376	82,956	27,420
2020	201,011	109,283	82,843	26,440
Total	391,109	219,659	165,799	53,860
2-Year Average	195,555	109,830	82,900	26,930

Source: USCIS, Office of Policy and Strategy, Policy Research Division (PRD), Claims 3. July 21, 2020 & USCIS Analysis.

DHS does not have data on the OES wage levels for selected petitions prior to FY 2019.[80] While there are some challenges to using OES wage data as a timeseries, DHS uses the wage data to provide some insight.[81] Table 6 shows the petitions that were selected for FYs 2019 and 2020, categorized by OES wage level. The main difference between the FY 2019 and FY 2020 data sets is that there are more petitions classified as not applicable (N/A) in the FY 2019 data compared to the FY 2020 data. Since DOL's Standard Occupational Classification (SOC)[82] structure was modified in 2018, some petitions were categorized as N/A in FY 2019. In 2019, DOL started to use a

[76] *See* Registration Final Rule, *supra* note 7.

[77] The total number of registrations for the advanced degree exemption and the regular cap do not equal the total 274,273 submitted registrations because the remaining 5,043 submitted registrations were invalid (*e.g.,* as prohibited duplicate registrations).

[78] U.S. Department of Homeland Security, U.S. Citizenship and Immigration Services, Office of Policy and Strategy, Policy Research Division (PRD), Claims 3, Aug. 31, 2020, USCIS Analysis.

[79] Calculation: 109,830 2-year average of Petitions Randomly Selected in FYs 2019–2020/195,555 2-year average of Total Number of H–1B Cap-Subject Petitions Filed in FYs 2019–2020 = 56%.

[80] USCIS created the tool to link USCIS H–1B data to the DOL data for FY 2019.

[81] U.S. Department of Labor, Bureau of Labor Statistics, Occupational Employment Statistics, *Frequently Asked Questions, https://www.bls.gov/oes/oes_ques.htm* (last visited Sept. 2, 2020) (Can OES data be used to compare changes in employment or wages over time? Although the OES survey methodology is designed to create detailed cross-sectional employment and wage estimates for the U.S., States, metropolitan and nonmetropolitan areas, across industry and by industry, it is less useful for comparisons of two or more points in time. Challenges in using OES data as a time series include changes in the occupational, industrial, and geographical classification systems, changes in the way data are collected, changes in the survey reference period, and changes in mean wage estimation methodology, as well as permanent features of the methodology).

[82] U.S. Department of Labor, Bureau of Labor Statistics, Standard Occupational Classification *https://www.bls.gov/soc/2018/home.htm* (last visited Oct. 27, 2020).

hybrid OES [83] occupational structure for classifying the petitions for FY 2020.

Another data limitation was that some of the FY 2020 data was incomplete with missing fields, and could not be classified into the specific wage levels; therefore, the petitions were categorized as N/A. DHS expects each registrant that is classified as N/A would be able to identify the appropriate SOC code for the proffered position because all petitioners are required to identify the appropriate SOC code for the proffered position on the LCA, even when there is no applicable wage level on the LCA. Using the SOC code and the above-mentioned DOL guidance, all registrants would be able to determine the appropriate OES wage level for purposes of completing the registration, regardless of whether they were to specify an OES wage level or utilize the OES program as the prevailing wage source on an LCA. While there are limitations to the data used, DHS believes that the estimates are helpful to see the current wage levels and estimate the future populations in each wage level.

TABLE 6—SELECTED PETITIONS BY WAGE LEVEL FY 2019–FY 2020

	Level I	Level II	Level III	Level IV	N/A	Total
Advanced Degree Exemption:						
FY 2019	7,363	13,895	2,016	553	3,593	27,420
FY 2020	7,453	14,467	2,311	694	1,515	26,440
Total	14,816	28,362	4,327	1,247	5,108	53,860
2-Year Average	7,408	14,181	2,164	623	2,554	26,930
Regular Cap:						
FY 2019	18,557	42,621	8,447	3,540	9,791	82,956
FY 2020	19,232	46,439	8,796	3,677	4,699	82,843
Total	37,789	89,060	17,243	7,217	14,490	165,799
2-Year Average	18,895	44,530	8,622	3,608	7,245	82,900

Source: USCIS, Office of Policy and Strategy, Policy Research Division (PRD), Claims 3. July 21, 2020 & USCIS Analysis.

DHS only has OES wage level data on the petitions that were selected toward the numerical allocations and does not have the wage level break down for the 85,725 [84] (44 percent) of petitions that were not selected since those petitions were returned to petitioners without entering data into DHS databases. Due to data limitations, DHS estimated the wage level break down for the 44 percent of petitions that were not selected because wage levels vary significantly between occupations and localities. Table 7 shows the 2-year approximated average of H–1B cap-subject petitions that were selected, separated by OES wage level, and percentages of accepted petitions by each wage category. The wage category with the most petitions as estimated is OES wage level II.

TABLE 7—CURRENT ESTIMATED NUMBER OF SELECTED PETITIONS BY WAGE LEVEL AND CAP TYPE FY 2019–FY 2020

Level	Regular cap		Advanced degree exemption	
	Selected	% of total	Selected	% of total
Level I & N/A	26,140	31.50	9,962	36.99
Level II	44,530	53.70	14,181	52.66
Level III	8,622	10.40	2,164	8.04
Level IV	3,608	4.40	623	2.31
Total	82,900	100	26,930	100

Source: USCIS, Office of Policy and Strategy, Policy Research Division (PRD), Claims 3. July 21, 2020 & USCIS Analysis.

b. FY 2021 Data [85]

The population affected by this proposed rule consists of prospective petitioners seeking to file H–1B cap-subject petitions, including those eligible for the advanced degree exemption. DHS regulations require all petitioners seeking to file H–1B cap-subject petitions to first electronically submit a registration for each beneficiary on whose behalf they seek to file an H–1B cap-subject petition, unless USCIS suspends the registration requirement.[86] A prospective petitioner whose registration is selected is eligible to file an H–1B cap-subject petition for the beneficiary named in the selected registration during the associated filing period.[87] Under the current H–1B registration selection process, USCIS first randomly selects registrations submitted on behalf of *all* beneficiaries, including those eligible for the advanced degree exemption.[88] USCIS then randomly selects from the remaining registrations a sufficient number projected as needed to reach the advanced degree exemption.[89] Prior to the implementation of the H–1B registration requirement for the FY 2021 H–1B cap selection process, petitioners submitted an annual average of 211,797

[83] U.S. Department of Labor, Bureau of Labor Statistics, Occupational Employment Statistics, *Implementing the 2018 SOC in the OES program—May 2019 and May 2020 Hybrid Occupations, https://www.bls.gov/oes/soc_2018.htm* (last visited Sept. 2, 2020).

[84] Calculation: 195,555 2-year average of Total Number of H–1B Cap-Subject Petitions received in FYs 2019–2020 − 109,830 2-year average of Petitions Randomly Selected in FYs 2019–2020 = 85,725.

[85] FY 2021 data pertains to the registrations received during FY 2020 for the FY 2021 H–1B cap season.

[86] *See* 8 CFR 214.2(h)(8)(iii)(A).

[87] *See id.* at § 214.2(h)(8)(iii)(D).

[88] *See id.* at § 214.2(h)(8)(iii)(A)(*5*).

[89] *See id.* at § 214.2(h)(8)(iii)(A)(*6*).

cap-subject H–1B petitions over FYs 2016 through 2020. The number of registrations submitted for the FY 2021 H–1B cap selection process, however, was 274,273. Because the number of registrations submitted for the FY 2021 H–1B cap selection process was significantly higher than the number of petitions submitted in prior years, DHS will use the total number of registrations submitted for the FY 2021 H–1B cap selection process as the population to estimate certain costs for this proposed rule.[90]

For the FY 2021 H–1B cap selection process, initially 106,100 registrations were selected to submit a petition. Prospective petitioners with selected registrations only were eligible to file H–1B petitions based on the selected registrations during a 90-day filing window. USCIS did not receive enough Form I–129 petitions during the initial filing period to meet the number of petitions projected as needed to reach the H–1B numerical allocations, so the selection process was run again in August 2020. An additional 18,315 registrations were selected in August 2020 for a total of 124,415 selected registrations for FY 2021. While the current number of registrations selected toward the FY 2021 numerical allocations is 124,415, DHS estimates certain costs for this proposed rule using the number of registrations initially selected (106,100) as the best estimate of the number of petitions needed to reach the numerical allocations.

TABLE 8—H–1B CAP-SUBJECT REGISTRATIONS SUBMITTED, FOR FY 2021

Fiscal year	Total number of H–1B registrations submitted	Round 1 number of H–1B registrations selected	Round 2 number of H–1B registrations selected	Total number of H–1B registrations selected *	Number of registrations submitted with Form G–28 **
2021	274,273	106,100	18,315	124,415	N/A
Total	274,273	106,100	18,315	124,415	N/A

Source: USCIS, Office of Policy and Strategy, Policy Research Division (PRD), Claims 3. August 31, 2020 USCIS Analysis.

* **Note:** USCIS administered the selection process twice because an insufficient number of petitions were filed following initial registration selection to reach the number of petitions projected as needed to reach the numerical allocations. USCIS has not finished receiving H–1B cap-subject petitions for FY 2021. Additional registrations may be selected if the number of petitions filed after the second round of registration selection does not reach the number projected as needed to reach the numerical allocations.

** **Note:** Data is still unavailable for FY 2021. USCIS used FYs 2019–2020 from Table 3 to estimate the percentage of submitted G–28s below.

Table 3 shows historical Form G–28 filings by attorneys or accredited representatives accompanying selected H–1B cap-subject petitions. DHS notes that these forms are not mutually exclusive. Based on the historical 5-year average from earlier in this analysis, DHS estimates 79.7 percent[91] of selected registrations will include Form G–28. DHS applies those percentages to the number of total registrations and estimates 219,418[92] Form G–28 were submitted with total registrations received. DHS uses the total registrations received for the FY 2021 H–1B cap selection process (274,273) as the estimate of registrations that will be received annually.

Additionally, DHS assumes that petitioners may use human resources (HR) specialists (or entities that provide equivalent services) (hereafter HR specialist) or use lawyers or accredited representatives[93] to complete and file H–1B petitions. A lawyer or accredited representative appearing before DHS must file Form G–28 to establish their eligibility and authorization to represent a client (applicant, petitioner, requestor, beneficiary or derivative, or respondent) in an immigration matter before DHS. DHS estimates that about 80 percent[94] of H–1B petitions typically would be completed and filed by a lawyer or other accredited representative (hereafter lawyer). DHS assumes the remaining 20 percent of H–1B petitions would be completed and filed by HR specialists.

Petitioners who use lawyers to complete and file H–1B petitions may either use an in-house lawyer or hire an outsourced lawyer. Of the total number of H–1B petitions filed in FY 2021, DHS estimates that 26 percent were filed by in-house lawyers while the remaining 54 percent were filed by outsourced lawyers.[95]

[90] DHS uses FY 2021 H–1B cap selection data as the population to estimate certain costs for this proposed rule because FY 2021 is the first year that registration was required. As explained above, DHS added the registration requirement on April 19, 2019, but the registration requirement was suspended for the FY 2020 H–1B cap.

[91] Calculation: 81,165 Forms G–28/101,822 Form I–129 petitions = 79.7 percent = 80 percent (rounded)

[92] Calculation: 274,273* 79.7 percent = 219,418 Form G–28.

[93] 8 CFR 292.1(a)(4) (defining an accredited representative as ''a person representing an organization described in § 292.2 of this chapter who has been accredited by the Board'').

[94] Calculation: 81,165 petitions filed with Form G–28/101,822 average petitions selected = 79.7 percent petitions completed and filed by a lawyer or other accredited representative (hereafter lawyer).

[95] DHS uses data from the longitudinal study conducted in 2003 and 2007 on legal career and placement of lawyers, which found that 18.6, 55, and 26.2 percent of lawyers practice law at government (federal and local) institutions, private law firms, and private businesses (as inside counsel), respectively. *See* Dinovitzer et al, *After the JD II: Second Results from a National Study of Legal Careers* (2009), The American Bar Foundation and the National Association for Law Placemen (NALP) Foundation for Law Career Research and Education, Table 3.1, p. 27, *https://www.law.du.edu/documents/directory/publications/sterling/AJD2.pdf.* Among those working in private law firms and private businesses (54 and 26 percent, respectively), DHS estimates that, while 67.7 percent of lawyers practice law in private law firms, the remaining 32.3 percent practice in private businesses (54 percent + 25.7 percent = 79.7 percent, 67.7 percent = 54/79.7*100, 32.2 percent = 25.7/79.7*100). Because 79.7 percent of the H–1B petitions are filed by lawyers or accredited representatives, DHS multiplies 79.7 percent by 32.3 and 67.7 percent to estimate the proportion of petitions filed by in-house lawyers (working in private businesses) and outsourced lawyer (working in private law firms), respectively.

26 (rounded) percent of petitions filed by in-house lawyers = 80 percent of petitions filed by lawyers or accredited representatives × 32.3 percent of lawyers work in private businesses.

54 (rounded) percent of petitions filed by outsourced lawyer = 80 percent of petitions filed by lawyers or accredited representatives × 67.7 percent of lawyers work in private law firms.

TABLE 9—SUMMARY OF ESTIMATED AVERAGE NUMBER OF PETITIONS/REGISTRATIONS SUBMITTED ANNUALLY BY TYPE OF FILER

Affected population	Estimated average population affected A	Number of petitions/registrations submitted by HR specialists B = A × 20%	Number of petitions/registrations submitted by in-house lawyers C = A × 26%	Number of petitions/registrations submitted by outsourced lawyers D = A × 54%
Estimated number of H–1B registrations submitted annually	274,273	54,855	71,311	148,107
Estimated number of H–1B registrations selected to file H–1B cap petitions annually	106,100	21,220	27,586	57,294

Source: USCIS analysis.

Based on the total estimated number of affected populations shown in Table 9, DHS further estimates the number of entities that would be affected by each requirement of this proposed rule to estimate the costs arising from the regulatory changes in the cost-benefit analysis section. Additionally, DHS uses the same proportion of HR specialists, in-house lawyers, and outsourced lawyers (20, 26, and 54 percent, respectively) to estimate the population that would be affected by the various requirements of this proposed rule.

c. Unquantified Costs & Benefits

Given that the demand for H–1B cap-subject visas, including those filed for the advanced degree exemption, has frequently exceeded the annual H–1B numerical allocations, this proposed rule would increase the chance of selection for registrations (or petitions, if registration were suspended) seeking to employ beneficiaries at level IV or level III wages. DHS believes this incentive for petitioners to offer wages that maximize their probability of selection is necessary to address the risk that greater numbers of U.S. employers could rely on the program to access relatively lower-cost labor, precluding other employers from benefitting from the H–1B program's intended purpose of providing high-skilled nonimmigrant labor to supplement domestic labor. The proposed rule could result in higher proffered wages or a reduction in the downward pressure on wages in industries and occupations with concentrations of relatively lower-paid H–1B workers. Additionally, this proposed rule may lead to an increase in employment opportunities for unemployed or underemployed U.S. workers seeking employment in positions otherwise offered to H–1B cap-subject beneficiaries at wage levels corresponding to lower wage positions. Employers which were to offer H–1B workers wages that correspond with level IV or level III OES wages would have higher chances of selection.

For the FY 2021 H–1B cap selection process, USCIS initially selected 106,100 (39 percent) [96] of H–1B registrations submitted toward the numerical allocations; of those 80,600 were selected toward the number projected as needed to reach the regular cap, and 25,500 were selected toward the number projected as needed to reach the advanced degree exemption. The total number of H–1B registrations submitted was 274,237, however 5,043 were invalid. Of the 269,194 valid registrations, 145,950 were submitted toward the regular cap and 123,244 were eligible for selection under the advanced degree exemption.

TABLE 10—H–1B CAP-SUBJECT REGISTRATIONS SUBMITTED FOR FY 2021

Fiscal year	Total number of valid H–1B registrations submitted	Regular cap	Advanced degree exemption
2021	269,194	145,950	123,244
Total	269,194	145,950	123,244

Source: USCIS, Office of Policy and Strategy, Policy Research Division (PRD), Claims 3. August 31, 2020 & USCIS & Analysis.
***Note:** The total number of registrations in this table does not equal 274,273 because 5,043 of the registrations were invalid.

DHS estimated the wage level distribution for FY 2021 based on the average distribution observed in FYs 2019 and 2020. As of September 2020, the wage level data is unavailable for FY 2021 because the petition filing process is ongoing. Table 11 displays the historic 2-year (FY 2019 and FY 2020) approximated average of H–1B cap-subject petitions that were selected, separated by OES wage level, and percentages of selected petitions by each wage category.

[96] Calculation: 106,100 Registrations Randomly Selected/274,273 Total Number of H–1B Cap-Subject registrations Filed in 2020 = 39%.

TABLE 11—HISTORIC NUMBER OF SELECTED PETITIONS BY WAGE LEVEL AND CAP TYPE

Level	Regular cap		Advanced degree exemption	
	Selected	% of total	Selected	% of total
Level I & Below	26,140	31.50	9,962	36.99
Level II	44,530	53.70	14,181	52.66
Level III	8,622	10.40	2,164	8.04
Level IV	3,608	4.40	623	2.31
Total	82,900	100	26,930	100

Source: USCIS, Office of Policy and Strategy, Policy Research Division (PRD), Claims 3. July 21, 2020 & USCIS Analysis.
*Note: Totals are based on 2-year averages of petitions randomly selected in FYs 2019–2020, Table 11 is replicated from Table 7.

DHS assumes that FY 2021 wage level distribution of registrations would equal the wage level distribution observed in FYs 2019 through 2020 data. DHS multiplied the percentage of selected petitions by level from Table 11 to estimate the breakdown of registrations by wage level. For example, DHS multiplied 145,950 by 4.4 percent to estimate that a total of 6,422 registrations would have been categorized as wage level IV under the regular cap.

TABLE 12—CURRENT ESTIMATED NUMBER OF REGISTRATIONS BY WAGE LEVEL AND CAP TYPE

Level	Regular cap		Advanced degree exemption	
	Estimated registrations	% of registrations	Estimated registrations	% of registrations
Level I & Below	45,974	31.50	45,588	36.99
Level II	78,375	53.70	64,900	52.66
Level III	15,179	10.40	9,909	8.04
Level IV	6,422	4.40	2,847	2.31
Total	145,950	100	123,244	100

Source: USCIS, Office of Policy and Strategy, Policy Research Division (PRD), Claims 3. August 31, 2020 & USCIS Analysis.
* **Note:** Totals are based on 2021 data.

This proposed rule would change the H–1B cap selection process. USCIS now would rank and select the registrations received (or petitions, as applicable) generally on the basis of the highest OES wage level that the proffered wage were to equal or exceed for the relevant SOC code and in the area of intended employment, beginning with OES wage level IV and proceeding in descending order with OES wage levels III, II, and I. As a result of the approximated 2-year average from above, DHS displays the projected selection percentages for registrations under the regular cap and advanced degree exemption in Table 13. With the revised selection method based on corresponding OES wage level and ranking, the approximated average indicates that all registrations with a proffered wage that corresponds to OES wage level IV or level III would be selected and 58,999, or 75 percent, of the registrations with a proffered wage that corresponds to OES wage level II would be selected toward the regular cap projections. None of the registrations with a proffered wage that corresponds to OES wage level I or below would be selected toward the regular cap projections. For the advanced degree exemption, DHS estimates all registrations with a proffered wage that corresponds to OES wage levels IV and III would be selected and 12,744, or 20 percent, of the registrations with a proffered wage that corresponds to OES wage level II would be selected. DHS estimates that none of the registrations with a proffered wage that corresponds to OES wage level I or below would be selected.

DHS is using the approximated 2-year average from above to illustrate the expected distribution of future selected registration percentages by corresponding wage level. However, DHS is unable to quantify the actual outcome because DHS cannot predict the actual number of registrations that would be received at each wage level because employers may change the number of registrations they choose to submit and the wages they offer in response to the changes proposed in this rule.

TABLE 13—NEW ESTIMATED NUMBER OF SELECTED REGISTRATIONS BY WAGE LEVEL AND CAP TYPE

Level	Regular cap			Advanced degree exemption		
	Total registrations	Selected registrations	% Selected	Total registrations	Selected registrations	% Selected
Level I & Below	45,974	0	0	45,588	0	0
Level II	78,375	58,999	75	64,900	12,744	20
Level III	15,179	15,179	100	9,909	9,909	100
Level IV	6,422	6,422	100	2,847	2,847	100

TABLE 13—NEW ESTIMATED NUMBER OF SELECTED REGISTRATIONS BY WAGE LEVEL AND CAP TYPE—Continued

Level	Regular cap			Advanced degree exemption		
	Total registrations	Selected registrations	% Selected	Total registrations	Selected registrations	% Selected
Total	145,950	80,600	.....	123,244	25,500	.....

Source: USCIS, Office of Policy and Strategy, Policy Research Division (PRD), Claims 3. August 31, 2020 & USCIS Analysis.
***Note:** Totals are based on FY 2021 data.

This proposed rule may primarily affect prospective petitioners seeking to file H–1B cap-subject petitions with a proffered wage that corresponds to OES wage level I and level II.[97] As Table 13 shows, this proposed rule is expected to result in a reduced likelihood that registrations for level II would be selected, as well as the likelihood that registrations for level I and below wages would not be selected. A prospective petitioner, however, could choose to increase the proffered wage so that it corresponds to a higher wage level. Another possible effect is that employers would not fill vacant positions that would have been filled by H–1B workers. These employers may be unable to find qualified U.S. workers, or may leave those positions vacant because they cannot justify raising the wage to stand greater chances of selection in the H–1B cap selection process. That, in turn, could result in fewer registrations and H–1B cap-subject petitions with a proffered wage that corresponds to OES wage level II and below.

DHS acknowledges that this proposed rule might result in more registrations (or petitions, if registration is suspended) with a proffered wage that would correspond to level IV and level III OES wages for H–1B cap-subject beneficiaries. DHS believes a benefit of this proposed rule may be that some petitioners may choose to increase proffered wages for H–1B cap-subject beneficiaries, so that the petitioner may have a greater chance of selection. This change would in turn benefit H–1B beneficiaries who ultimately would receive a higher rate of pay that they otherwise would have in the absence of this rule. However, DHS is not able to estimate the magnitude of such benefits. DHS acknowledges the change in the selection procedure resulting from this proposed rule would create distributional effects and costs. DHS is unable to quantify the extent or determine the probability of H–1B petitioner behavioral changes. Therefore, DHS does not know the portion of overall impacts of this rule that would be benefits or costs.

As a result of this proposed rule, costs would be borne by prospective petitioners that would have hired lower wage level H–1B cap-subject beneficiaries, but were unable to do so because of a reduced chance of selection in the H–1B selection process. Such employers may also incur additional costs to find available replacement workers. DHS estimates costs incurred associated with loss of productivity from not being able to hire H–1B workers, or the need to search for and hire U.S. workers to replace the H–1B workers. Although DHS does not have data to estimate the costs resulting from productivity loss for these employers, DHS provides an estimate of the search and hiring costs for the replacement workers. Accordingly, based on the result of the study conducted by the Society for Human Resource Management (SHRM) in 2016, DHS assumes that an entity whose H–1B petition was denied would incur an average cost of $4,398 per worker (in 2019 dollars)[98] to search for and hire a U.S. worker in place of an H–1B nonimmigrant worker during the period of this economic analysis. If petitioners cannot find suitable replacements for the labor H–1B cap-subject beneficiaries would have provided if selected and ultimately granted H–1B status, this proposed rule would primarily be a cost to these petitioners through lost productivity and profits.

DHS also acknowledges that some petitioners might be impacted in terms of the employment, productivity loss, search and hire costs, and profits resulting from labor turnover. In cases where companies cannot find reasonable substitutes for the labor the H–1B beneficiaries would have provided, affected petitioners also would lose profits from the lost productivity. In such cases, employers would incur opportunity costs by having to choose the next best alternative to immediately fill the job the prospective H–1B worker would have filled. There may be additional opportunity of costs to employers such as search costs and training.

Such possible disruptions to companies would depend on the interaction of a number of complex variables that are constantly in flux, including national, state, and local labor market conditions, economic and business factors, the type of occupations and skills involved, and the substitutability between H–1B workers and U.S. workers. These costs to petitioners are expected to be offset by increased productivity and reduced costs to find available workers for petitioners of higher wage level H–1B beneficiaries.

DHS uses the compensation to H–1B employees as a measure of the overall impact of the provisions. While DHS would expect wages paid to H–1B beneficiaries to be higher if the rule is finalized as proposed, DHS is unable to quantify the benefit of increased compensation because not all of the wage increases would correspond with productivity increases. This proposed rule may indirectly benefit prospective petitioners submitting registrations with a proffered wage that corresponds to OES wage Level I and II registrations. The indirect benefit would be present during the COVID–19 pandemic and the

[97] DOL uses wage levels to determine the prevailing wage based on the level of education, experience (including special skills and other requirements), or supervisory duties required for a position; however, USCIS would use wage levels to rank and select registrations (or petitions, as applicable) based on the rate of pay for the wage level that the proffered wage were to equal or exceed. More information about DOL wage level determinations can be found *supra* notes 26 and 38. DHS acknowledges that varying wage levels correspond to varying skill levels. In analyzing the economic effects of this proposed rule, DHS recognizes that prospective petitioners may offer wages exceeding the wage levels associated with the skills required for given positions to increase their chances of selection under the ranked selection process.

[98] Society for Human Resource Management (SHRM), *2016 Human Capital Benchmarking Report,* at 16, *https://www.shrm.org/hr-today/trends-and-forecasting/research-and-surveys/Documents/2016-Human-Capital-Report.pdf* (last visited Oct. 21, 2020). The study was based on data collected from 2,048 randomly selected human resource professionals who participated in the 2016 SHRM Human Capital Benchmarking Survey. The hiring cost is reported as $4,129 per worker in 2016 dollars and converted to 2019 dollars in this analysis. The hiring cost includes third-party agency fees, advertising agency fees, job fairs, online job board fees, employee referrals, travel costs of applicants and staff, relocation costs, recruiter pay and benefits, and talent acquisition system costs.

ensuing economic recovery if the prospective petitioners were able to find replacement workers accepting a lower wage and factoring in the replacement cost of $4,398 per worker in the United States. Similarly, prospective petitioners that would be submitting registrations with a proffered wage that would correspond to OES wage level I and II and that substitute toward unemployed or underemployed individuals in the U.S. labor force would create an additional indirect benefit from this rule. This would benefit those in the U.S. labor force if petitioners were to decide to select a U.S. worker rather than a prevailing wage level I or II H–1B worker. DHS notes that, although the pandemic is widespread, the severity of its impacts varies by locality and industry, and there may be structural impediments to the national and local labor market. Accordingly, DHS cannot quantify with confidence, the net benefit of the redistribution of H–1B cap selections detailed in this analysis.

DHS also proposes to change the filing procedures to allow USCIS to deny or revoke approval of a subsequent new or amended petition filed by the petitioner, or a related entity, on behalf of the same beneficiary, if USCIS were to determine that the filing of the new or amended petition is part of the petitioner's attempt to unfairly decrease the proffered wage to an amount that would be equivalent to a lower wage level, after listing a higher wage level on the registration (or petition, if registration is suspended) to increase the odds of selection. DHS is unable to quantify the cost of these proposed changes to petitioners. DHS seeks public comments on any anticipated costs and data relevant for estimation of the impacts of the changes proposed by this rule.

d. Costs of Filing Form I–129H1 Petitions

DHS is proposing to amend Form I–129H1, which must be filed by petitioners on behalf of H–1B beneficiaries, to align with the regulatory changes DHS would make in this proposed rule. The changes to Form I–129H1 would result in an increased time burden to complete and submit the form.

Absent the changes implemented through this proposed rule, the current estimated time burden to complete and file Form I–129H1 is 4.0 hours per petition.[99] As a result of the changes in this proposed rule, DHS estimates the total time burden to complete and file Form I–129H1 would be 4.25 hours per petition, to account for the additional time petitioners would spend reviewing instructions, gathering the required documentation and information, completing the petition, preparing statements, attaching necessary documentation, and submitting the petition. DHS estimates the time burden would increase by a total of 15 minutes (0.25 hours) per petition for completing a Form I–129H1 petition.[100]

To estimate the additional cost of filing Form I–129H1, DHS applies the additional estimated time burden to complete and file Form 1–129H1 (0.25 hours) to the respective total population and compensation rate of who may file, including an HR specialist, in-house lawyer, or outsourced lawyer. As shown in Table 14, DHS estimates, the total additional annual opportunity cost of time to petitioners completing and filing Form I–129H1 petitions would be approximately $3,457,401. DHS requests public comments on the estimate of additional time petitioners will spend reviewing instructions, gathering the required documentation and information, completing the petition, preparing statements, attaching necessary documentation, and submitting the petition.

TABLE 14—ADDITIONAL OPPORTUNITY COSTS OF TIME TO PETITIONERS FOR FILING FORM I–129H1 PETITIONS FROM AN INCREASE IN TIME BURDEN

Cost items	Total affected population A	Additional time burden to complete Form I–129H1 (hours) B	Compensation rate C	Total cost D = A × B × C
Opportunity cost of time to complete Form I–129H1 for H–1B petitions by:				
HR specialist	21,220	0.25	$47.57	$252,359
In-house lawyer	27,586	0.25	102.00	703,443
Outsourced lawyer	57,294	0.25	174.65	2,501,599
Total	106,100			3,457,401

Source: USCIS analysis.

e. Costs of Submitting Registrations as Modified by This Proposed Rule

DHS is proposing to amend the required information on the H–1B Registration Tool. In addition to the information required on the current registration tool, a registrant would be required to provide the highest OES wage level that the proffered wage would equal or exceed for the relevant SOC code in the area of intended employment, if such data is available.

[99] DHS estimates the costs and benefits of this rule using the newly published Fee Schedule Final Rule, and related form changes, as the baseline. *See supra* note 66. The Fee Schedule Final Rule was scheduled to go into effect on October 2, 2020. On September 29, 2020, the U.S. District Court for the Northern District of California issued a nationwide injunction, which prevents DHS from implementing the Fee Schedule Final Rule. *See, Immigrant Legal Resource Center* v. *Wolf,* No. 4:20–cv–5883 (N.D. Cal. Sept. 29, 2020). In addition, on October 8, 2020, DHS was also preliminarily enjoined from implementing and enforcing the Fee Schedule Final Rule by the U.S. District Court for the District of Columbia, including by adopting any form changes associated with the rule. *See, Northwest Immigrant Rights Project* v. *U.S. Citizenship and Immigration Servs.,* 1:19–cv–03283–RDM (D.D.C. Oct. 8, 2020). While DHS intends to vigorously defend these lawsuits and is not changing the economic baseline for this rule as a result of the litigation, it is using the currently approved Form I–129, and not the form version associated with the enjoined Fee Schedule Final Rule for the purpose of seeking OMB approval of form changes associated with this rule. Should DHS prevail in the Fee Schedule Final Rule litigation and be able to implement the form changes associated with that rule, DHS will comply with the Paperwork Reduction Act and seek approval of the information collection changes associated with this rule, based on the version of the Form I–129 that is in effect at that time.

[100] 0.25 hours additional time to complete and file Form I–129H1 = (4.25 hours to complete and file the new Form I–129H1) − (4 hours to complete and file the current Form I–129 and its supplements).

The proffered wage is the wage that the employer intends to pay the beneficiary. The SOC code and area of intended employment would be indicated on the LCA filed with the petition. For registrants relying on a private wage survey, if the proffered wage were less than the corresponding level I OES wage, the registrant would select the ''Wage Level I and below'' box on the registration tool. If the registration indicates that the H–1B beneficiary would work in multiple locations, or in multiple positions if the prospective petitioner is an agent, USCIS would rank and select the registration based on the lowest corresponding OES wage level that the proffered wage would equal or exceed. In the limited instance where there is no current OES prevailing wage information for the proffered position, the registrant would follow DOL guidance on prevailing wage determinations to determine which OES wage level to select on the registration and USCIS would rank and select based on the highest OES wage level. The proposed change to this registration requirement would impose increased opportunity costs of time to registrants, by adding additional information to their registration.

The current estimated time burden to complete and file an electronic registration is 30 minutes (0.5 hours) per registration.[101] DHS estimates the total time burden to complete and file a registration, if this rule is finalized as proposed, would be 50 minutes (0.83 hours) per registration, which amounts to an additional time burden of 20 minutes (0.33 hours) per registration. The additional time burden accounts for the additional time a registrant would spend reviewing instructions, completing the registration, and submitting the registration.

To estimate the additional cost of submitting a registration, DHS applies the additional estimated time burden to complete and submit the registration (0.33 hours) to the respective total population and total rate of compensation of who may file, including HR specialists, in-house lawyers, or outsourced lawyers. As shown in Table 15, DHS estimates the total additional annual opportunity cost of time to the prospective petitioners of completing and submitting registrations would be approximately $11,797,520. DHS requests public comments on the estimate of additional time petitioners will spend reviewing instructions, gathering the required documentation and information, completing the petition, preparing statements, attaching necessary documentation, and submitting a registration.

TABLE 15—ADDITIONAL COST OF SUBMITTING REGISTRATIONS

Cost items	Total affected population A	Additional time burden to submit registrations (hours) B	Compensation rate C	Total cost D = A × B × C
Opportunity cost of time to complete registrations by:				
HR specialist	54,855	0.33	$47.57	$861,119
In-house lawyer	71,311	0.33	102.00	2,400,328
Outsourced lawyer	148,107	0.33	174.65	8,536,073
Total	274,273			11,797,520

Source: USCIS analysis.

While the expectation is that the registration process will be run on an annual basis, USCIS may suspend the H–1B registration requirement, in its discretion, if it determines that the registration process is inoperable for any reason. The selection process also allows for selection based solely on the submission of petitions in any year in which the registration process is suspended due to technical or other issues. In years when registration is suspended, DHS estimates, based on the 5-year average of H–1B cap-subject petitions received for FYs 2016 to 2020, that 211,797 H–1B cap-subject petitions would be submitted annually. In the event registration is suspended and 211,797 H–1B cap-subject petitions are submitted, DHS estimates that 106,100 petitions would be selected for adjudication to meet the numerical allocations and 105,697 petitions would be rejected. For FY 2021, DHS selected 124,415 registrations to generate the 106,100 petitions projected to meet the numerical allocations. Therefore, DHS estimates that the additional cost to petitioners for preparing and submitting H–1B cap-subject petitions, if this rule is finalized as proposed, would be higher in the event registration were suspended because more petitions would be prepared and submitted in this scenario. However, if registration were suspended there would be no costs associated with registration so the overall additional cost of this proposed rule to petitioners would be less (stated another way, the estimated added cost for submitting approximately 212,000 petitions if registration were suspended would be less than the added costs based on approximately 274,000 registrations and 106,000 petitions for those with selected registrations). Since the expectation is that registration will be run on an annual basis and because the estimated additional costs resulting from this proposed rule would be less if registration were suspended, DHS is not separately estimating the costs for years when registration would be suspended and is instead relying on the additional costs created by this proposed rule when registration would be required to estimate total costs of this proposed rule to petitioners seeking to file H–1B cap-subject petitions.

f. Familiarization Cost

Familiarization costs comprise the opportunity cost of the time spent reading and understanding the details of a rule in order to fully comply with the new regulation(s). To the extent that an individual or entity directly regulated by the rule incurs familiarization costs, those familiarization costs are a direct

[101] *Agency Information Collection Activities; Revision of a Currently Approved Collection: H–1B Registration Tool,* 84 FR 54159 (Oct. 9, 2019).

cost of the rule. The entities directly regulated by this rule are the employers who file H–1B petitions. Using FY 2020 internal data on actual filings of Form I–129 H–1B petitions, DHS identified 24,111 [102] unique entities. DHS assumes that the petitioners require approximately two hours to familiarize themselves with the rule. Using the average total rate of compensation of HR specialists, In-house lawyer, and Outsourced lawyer from Table 4 and assuming one person at each entity familiarizes his or herself with the rule, DHS estimates a one-time total familiarization cost of $6,285,527 in FY2022.

TABLE 16—FAMILIARIZATION COSTS TO THE PETITIONERS

Cost items	Total affected population A	Additional time burden to familiarize (hours) B	Compensation rate C	Total cost D = A × B × C
Opportunity cost of time to familiarize the rule by:				
HR specialist	4,822	2	$47.57	$458,765
In-house lawyer	6,269	2	102.00	1,278,876
Outsourced lawyer	13,020	2	174.65	4,547,886
Total	24,111			6,285,527

Source: USCIS analysis.

ii. Total Estimated Costs of Regulatory Changes

In this section, DHS presents the total annual costs annualized over a 10-year implementation period if the regulatory changes in the proposed rule are finalized as proposed. Table 17 details the total annual costs of the proposed rule to petitioners would be $21,540,448 in FY 2022 and $15,254,921 in FY 2023–2032.

TABLE 17—SUMMARY OF ESTIMATED ANNUAL COSTS TO PETITIONERS IN THE PROPOSED RULE

Costs	Total estimated annual cost
Petitioners' additional opportunity cost of time in filing Form I–129H1 petitions	$3,457,401
Petitioners' additional opportunity cost of time in submitting information on the registration	11,797,520
Familiarization Cost (Year 1 only FY 2022)	6,285,527
Total Annual Costs (undiscounted) = FY 2022	21,540,448
Total Annual Cost (undiscounted) = FY 2023–FY 2032	15,254,921

Table 18 shows costs over the 10-year implementation period of this proposed rule. DHS estimates the 10-year total net cost of the rule to petitioners to be approximately $158,834,737 undiscounted, $136,230,024 discounted at 3-percent, and $113,018,506 discounted at 7-percent. Over the 10-year implementation period of the rule, DHS estimates the annualized costs of the rule to be $15,970,315 annualized at 3-percent, $16,091,293 annualized at 7-percent.

TABLE 18—TOTAL COSTS OF THIS PROPOSED RULE

Year	Total estimated costs $21,540,448 (year 1); $15,254,921 (year 2–10)	
	Discounted at 3-percent	Discounted at 7-percent
1	$20,913,056	$20,131,260
2	14,379,226	13,324,239
3	13,960,414	12,452,560
4	13,553,800	11,637,906
5	13,159,029	10,876,548
6	12,775,756	10,164,998
7	12,403,647	9,499,998
8	12,042,376	8,878,503
9	11,691,627	8,297,666
10	11,351,094	7,754,828
Total	136,230,024	113,018,506
Annualized	15,970,315	16,091,293

[102] Source: USCIS, Office of Policy and Strategy, Policy Research Division (PRD), Claims 3. August 18, 2020 & USCIS Analysis.

E.O. 13771 directs agencies to reduced regulation and control regulatory costs. This proposed rule is expected to be an E.O. 13771 regulatory action. DHS estimates the total cost of this rule would be $10,515,740 annualized using a 7-percent discount rate over a perpetual time horizon, in 2016 dollars, and discounted back to 2016.

iii. Costs to the Federal Government

DHS proposes to revise the process and system by which H–1B registrations or petitions, as applicable, would be selected toward the annual numerical allocations. This proposed rule would require updates to USCIS information technology (IT) systems and additional time spent by USCIS on H–1B registrations or petitions.

The INA provides for the collection of fees at a level that will ensure recovery of the full costs of providing adjudication and naturalization services by DHS, including administrative costs and services provided without charge to certain applicants and petitioners.[103] DHS notes USCIS establishes its fees by assigning costs to an adjudication based on its relative adjudication burden and use of USCIS resources. Fees are established at an amount that is necessary to recover these assigned costs such as salaries and benefits of clerical staff, officers, and managers, plus an amount to recover unassigned overhead (such as facility rent, IT equipment and systems, or other expenses) and immigration services provided without charge. Consequently, since USCIS immigration fees are based on resource expenditures related to the benefit in question, USCIS uses the fee associated with an information collection as a reasonable measure of the collection's costs to USCIS. DHS notes the time necessary for USCIS to review the information submitted with the forms relevant to this proposed rule includes the time to adjudicate the benefit request. These costs are captured in the fees collected for the benefit request from petitioners.

5. Regulatory Alternatives

DHS considered various regulatory alternatives to a number of the provisions of the proposed rule. Recognizing that a rote or indiscriminate interpretation of the statute would create an absurd or impossible result, DHS requests comments on, including potential alternatives to, the proposed ranking and selection of registrations based on the OES prevailing wage level that corresponds to the requirements of the proffered position in situations where there is no current OES prevailing wage information. More generally, DHS requests comments and seeks alternatives for selecting from among all H–1B registrations or petitions to ensure that H–1B visas are given to workers who will provide the highest valued use to the U.S. economy, such as ranking and selecting all registrations or petitions according to the actual OES prevailing wage level that the position would be rated at rather than the wage level that the proffered wage equals or exceeds.

Another alternative for which DHS seeks public comment is a process where all registrations or petitions, while still randomly selected, would be weighted according to their OES prevailing wage level, such that, for example, a level IV position would have four times greater chance of selection than a level I position, a level III position would have three times greater chance of selection than a level I position, and a level II position would have two times greater chance of selection than a level I position.

B. Regulatory Flexibility Act

The Regulatory Flexibility Act of 1980 (RFA), 5 U.S.C. 601–612, as amended by the Small Business Regulatory Enforcement Fairness Act of 1996, Public Law 104–121 (March 29, 1996), requires Federal agencies to consider the potential impact of regulations on small entities during the development of their rules. ''Small entities'' are small businesses, not-for-profit organizations that are not dominant in their fields, and governmental jurisdictions with populations of less than 50,000. An ''individual'' is not considered a small entity and costs to an individual from a rule are not considered for RFA purposes. In addition, the courts have held that the RFA requires an agency to perform an initial regulatory flexibility analysis (IRFA) of small entity impacts only when a rule directly regulates small entities. Consequently, any indirect impacts from a rule to a small entity are not considered as costs for RFA purposes.

Although individuals, rather than small entities, submit the majority of immigration and naturalization benefit applications and petitions, this proposed rule would affect entities that file and pay fees for H–1B immigration benefit requests. The USCIS forms that are subject to an RFA analysis for this proposed rule are Form I–129H1, Petition for a Nonimmigrant Worker and the Registration H–1B Tool.

DHS does not believe that the changes in this proposed rule would have a significant economic impact on a substantial number of small entities that would file Form I–129H1 for H–1B petitions.

1. Initial Regulatory Flexibility Analysis

i. A Description of the Reasons Why the Action by the Agency Is Being Considered

DHS is proposing to amend its regulations governing H–1B specialty occupation workers. The purpose of the proposed changes is to better ensure that H–1B classification is more likely to be awarded to petitioners seeking to employ higher-skilled and higher-paid beneficiaries. DHS believes these changes would disincentivize use of the H–1B program to fill relatively lower-paid, lower-skilled positions.

ii. A Statement of the Objectives of, and Legal Basis for, the Proposed Rule

DHS's objectives and legal authority for this proposed rule are discussed earlier in the preamble.

iii. A Description and, Where Feasible, an Estimate of the Number of Small Entities to Which the Proposed Changes Would Apply

For this analysis, DHS conducted a sample analysis of historical Form I–129 H–1B petitions to estimate the number of small entities impacted by this proposed rule. DHS utilized a subscription-based online database of U.S. entities, ReferenceUSA, as well as three other open-access, free databases of public and private entities, Manta, Cortera, and Guidestar to determine the North American Industry Classification System (NAICS) code,[104] revenue, and employee count for each entity in the sample. To determine whether an entity is small for purposes of RFA, DHS first classified the entity by its NAICS code and then used SBA size standards guidelines [105] to classify the revenue or

[103] *See* INA section 286(m), 8 U.S.C. 1356(m).

[104] U.S. Census Bureau, North American Industry Classification System, *http://www.census.gov/eos/www/naics/* (last visited Oct. 21, 2020).

[105] DHS utilized a subscription-based online database of U.S. entities, ReferenceUSA, as well as three other open-access, free databases of public and private entities, Manta, Cortera, and Guidestar, to determine the North American Industry Classification System (NAICS) code, revenue, and employee count for each entity. Guidelines suggested by the SBA Office of Advocacy indicate that the impact of a rule could be significant if the cost of the regulation exceeds 5 percent of the labor costs of the entities in the sector. Office of Advocacy, Small Business Administration, ''A Guide for Government Agencies, How to Comply with the Regulatory Flexibility Act'', at 19, *https://www.sba.gov/sites/default/files/advocacy/How-to-Comply-with-the-RFA-WEB.pdf* (last visited Oct. 21, 2020).

employee count threshold for each entity. Based on the NAICS codes, some entities were classified as small based on their annual revenue, and some by their numbers of employees. Once as many entities as possible were matched, those that had relevant data were compared to the size standards provided by the SBA to determine whether they were small or not. Those that could not be matched or compared were assumed to be small under the presumption that non-small entities would have been identified by one of the databases at some point in their existence.

Using FY 2020 internal data on actual filings of Form I–129 H–1B petitions, DHS identified 24,111 [106] unique entities. DHS devised a methodology to conduct the small entity analysis based on a representative, random sample of the potentially impacted population. DHS first determined the minimum sample size necessary to achieve a 95 percent confidence level confidence interval estimation for the impacted population of entities using the standard statistical formula at a 5 percent margin of error. DHS then created a sample size greater than the minimum necessary to increase the likelihood that our matches would meet or exceed the minimum required sample.

DHS randomly selected a sample of 473 entities from the population of 24,111 entities that filed Form I–129 for H–1B petitions in FY 2020. Of the 473 entities, 406 entities returned a successful match of a filing entity in the ReferenceUSA, Manta, Cortera, and Guidestar databases; 67 entities did not return a match. Using these databases' revenue or employee count and their assigned North American Industry Classification System (NAICS) code, DHS determined 312 of the 406 matches to be small entities, 94 to be non-small entities. Based on previous experience conducting regulatory flexibility analyses, DHS assumes filing entities without database matches or missing revenue/employee count data are likely to be small entities. As a result, in order to prevent underestimating the number of small entities this rule would affect, DHS conservatively considers all the non-matched and missing entities as small entities for the purpose of this analysis. Therefore, DHS conservatively classifies 379 of 473 entities as small entities, including combined non-matches (67), and small entity matches (312). Thus, DHS estimates that 80.1% (379 of 473) of the entities filing Form I–129 H–1B petitions are small entities.

In this analysis DHS assumes that the distribution of firm size for our sample is the same as the entire population of Form I–129H1. Thus, DHS estimates the number of small entities to be 80.1% of the population of 24,111 entities that filed Form I–129 under the H–1B classification, as summarized in Table 18 below. The annual numeric estimate of the small entities impacted by this proposed rule is 19,319 entities.[107]

TABLE 18—NUMBER OF SMALL ENTITIES FOR FORM I–129 FOR H–1B, FY 2020

Population	Number of small entities	Proportion of population (percent)
24,111	19,319	80.1

Following the distributional assumptions above, DHS uses the set of 312 small entities with matched revenue data to estimate the economic impact of the proposed rule on each small entity. The economic impact, in percent, for each small entity is the sum of the impacts of the proposed changes divided by the entity's sales revenue.[108] DHS constructed the distribution of economic impact of the proposed rule based on the sample of 312 small entities. Across all 312 small entities, the proposed increase in cost to a small entity would range from 0.00000026 percent to 2.5 percent of that entity's FY 2020 revenue. Of the 312 small entities, 0 percent (0 small entities) would experience a cost increase that is greater than 5 percent of revenues. Extrapolating to the population of 19,319 small entities and assuming an economic impact significance threshold of 5 percent of annual revenues, DHS estimates no small entities would be significantly affected by the proposed rule.

Based on this analysis, DHS does not believe that the proposed changes in this proposed rule would have a significant economic impact on a substantial number of small entities that file I–129H1.

iv. A Description of the Projected Reporting, Recordkeeping, and Other Compliance Requirements of the Proposed Rule, Including an Estimate of the Classes of Small Entities That Will Be Subject to the Requirement and the Types of Professional Skills

As stated above in the preamble, the proposed rule would impose additional reporting, recordkeeping, or other compliance requirements on entities that could be small entities.

v. An Identification of All Relevant Federal Rules, to the Extent Practical, That May Duplicate, Overlap, or Conflict With the Proposed Rule

DHS is unaware of any duplicative, overlapping, or conflicting Federal rules, but invites any comment and information regarding any such rules.

vi. Description of Any Significant Alternatives to the Proposed Rule That Accomplish the Stated Objectives of Applicable Statutes and That Minimize Any Significant Economic Impact of the Proposed Rule on Small Entities

DHS requests comments on, including potential alternatives to, the proposed ranking and selection of registrations based on the OES prevailing wage level that corresponds to the requirements of the proffered position in situations where there is no current OES prevailing wage information. In the RFA context, DHS seeks comments on alternatives that would accomplish the

[106] Source: USCIS, Office of Policy and Strategy, Policy Research Division (PRD), Claims 3. Aug. 18, 2020, & USCIS Analysis.

[107] The annual numeric estimate of the small entities (19,319) = Population (24,111) * Percentage of small entities (80.1%).

[108] The economic impact, in percent, for each small entity i = (Cost of one petition for entity i × Number of petitions for entity i) × 100. The cost of one petition for entity i ($75.60) is estimated by adding the two cost components per petition of the proposed rule ($75.60 = $32.59 + $43.01). The first component ($32.59) is the weighted average additional cost of filing a petition, and is calculated by dividing total cost by the number of petitions ($32.59 = $3,457,401/106,100) from Table 14. The second component ($43.01) is the weighted average cost of submitting information on the registration and is calculated by dividing total cost by the number of baseline petitions ($43.01 = $11,797,520/274,273) from Table 15. The number of petitions for entity i is taken from USCIS internal data on actual filings of I–129 H–1B petition. The entity's sales revenue is taken from ReferenceUSA, Manta, Cortera, and Guidestar databases.

objectives of this proposed rule without unduly burdening small entities. DHS also welcomes any public comments or data on the number of small entities that would be petitioning for an H–1B employee and any direct impacts on those small entities.

C. Unfunded Mandates Reform Act

The Unfunded Mandates Reform Act of 1995 (UMRA) is intended, among other things, to curb the practice of imposing unfunded federal mandates on State, local, and tribal governments. Title II of the UMRA requires each federal agency to prepare a written statement assessing the effects of any federal mandate in a proposed or final agency rule that may result in a $100 million or more expenditure (adjusted annually for inflation) in any one year by State, local, and tribal governments, in the aggregate, or by the private sector. Based on the Consumer Price Index for All Urban Consumers (CPI–U), the value equivalent of $100 million in 1995 adjusted for inflation to 2019 levels is approximately $168 million.[109]

Given the uncertainties discussed previously, DHS acknowledges the possibility that this proposed rule could result in private sector expenditures exceeding $100 million, adjusted for inflation to $168 million in 2019 dollars, in any 1 year. While DHS has explored opportunities to minimize these potential costs as directed by Title II of the Act, the agency invites input from the public on reducing these potential costs in the final rule.

Congressional Review Act

For reasons described in the Summary of Economic Effects, this proposed rule is a major rule as defined by 5 U.S.C. 804, also known as the ''Congressional Review Act,'' as enacted in section 251 of the Small Business Regulatory Enforcement Fairness Act of 1996, Public Law 104–121, 110 Stat. 847, 868 *et seq.,* and thus a final rule resulting from this proposed rule would not be subject to a 60-day delay in the rule becoming effective. If this proposed rule is finalized, DHS will send it to Congress and to the Comptroller General under the Congressional Review Act, 5 U.S.C. 801 *et seq.*

D. Executive Order 13132 (Federalism)

This proposed rule would not have substantial direct effects on the states, on the relationship between the national government and the states, or on the distribution of power and responsibilities among the various levels of government. Therefore, in accordance with section 6 of Executive Order 13132, DHS determined that this proposed rule does not have sufficient federalism implications to warrant the preparation of a federalism summary impact statement.

E. Executive Order 12988 (Civil Justice Reform)

This proposed rule meets the applicable standards set forth in sections 3(a) and 3(b)(2) of Executive Order 12988.

F. Executive Order 13175 (Consultation and Coordination With Indian Tribal Governments)

This proposed rule does not have ''tribal implications'' because it does not have substantial direct effects on one or more Indian tribes, on the relationship between the Federal Government and Indian tribes, or on the distribution of power and responsibilities between the Federal Government and Indian tribes. Accordingly, E.O. 13175, Consultation and Coordination with Indian Tribal Governments, requires no further agency action or analysis.

G. National Environmental Policy Act

DHS analyzes actions to determine whether the National Environmental Policy Act, Public Law 91–190, 42 U.S.C. 4321 through 4347 (NEPA), applies to them and, if so, what degree of analysis is required. DHS Directive 023–01 Rev. 01 (Directive) and Instruction Manual 023–01–001–01 Rev. 01, *Implementation of the National Environmental Policy Act* (Instruction Manual) establish the policies and procedures that DHS and its components use to comply with NEPA and the Council on Environmental Quality (CEQ) regulations for implementing NEPA, 40 CFR parts 1500–1508.

The CEQ regulations allow federal agencies to establish, with CEQ review and concurrence, categories of actions (''categorical exclusions'') that experience has shown do not individually or cumulatively have a significant effect on the human environment and, therefore, do not require an Environmental Assessment (EA) or Environmental Impact Statement (EIS). 40 CFR 1507.3(b)(2)(ii), 1508.4. Categorical exclusions established by DHS are set forth in Appendix A of the Instruction Manual. Under DHS NEPA implementing procedures, for an action to be categorically excluded, it must satisfy each of the following three conditions: (1) The entire action clearly fits within one or more of the categorical exclusions; (2) the action is not a piece of a larger action; and (3) no extraordinary circumstances exist that create the potential for a significant environmental effect. Instruction Manual section V.B(2)(a)–(c).

As discussed in more detail throughout this proposed rule, DHS is proposing to amend regulations governing the selection of registrations or petitions, as applicable, toward the annual H–1B numerical allocations. This proposed rule establishes that, if more registrations were to be received during the annual initial registration period (or petition filing period, if applicable) than necessary to reach the applicable numerical allocation, USCIS would rank and select the registrations (or petitions, if the registration process were suspended) received on the basis of the highest OES wage levels that the proffered wages were to equal or exceed for the relevant SOC code and in the area of intended employment, beginning with OES wage level IV and proceeding in descending order with OES wage levels III, II, and I. If a proffered wage were to fall below an OES wage level I, because the proffered wage were based on a prevailing wage from another legitimate source (other than OES) or an independent authoritative source, USCIS would rank the registration in the same category as OES wage level I.[110]

Generally, DHS believes NEPA does not apply to a rule intended to change a discrete aspect of a visa program because any attempt to analyze its potential impacts would be largely speculative, if not completely so. This rule does not propose to alter the statutory limitations on the numbers of nonimmigrants who: May be issued initial H–1B visas or granted initial H–1B nonimmigrant status, will consequently be admitted into the United States as H–1B nonimmigrants, will be allowed to change their status to H–1B, or will extend their stay in H–1B

[109] *See* U.S. Department of Labor, Bureau of Labor Statistics, *Historical Consumer Price Index for All Urban Consumers (CPI–U): U.S. city average, all items, by month, https://www.bls.gov/cpi/tables/supplemental-files/historical-cpi-u-202003.pdf* (last visited Sept. *2, 2020).*

Calculation of inflation: 1) Calculate the average monthly CPI–U for the reference year (1995) and the current year (2019); 2) Subtract reference year CPI–U from current year CPI–U; 3) Divide the difference of the reference year CPI–U and current year CPI–U by the reference year CPI–U; 4) Multiply by 100 = [(Average monthly CPI–U for 2019—Average monthly CPI–U for 1995)/(Average monthly CPI–U for 1995)] * 100 = [(255.657—152.383)/152.383] * 100 = (103.274/152.383) *100 = 0.6777 * 100 = 67.77 percent = 68 percent (rounded).

Calculation of inflation-adjusted value: $100 million in 1995 dollars * 1.68 = $168 million in 2019 dollars.

[110] If the proffered wage is expressed as a range, USCIS would make the comparison using the lowest wage in the range.

status. DHS cannot reasonably estimate whether the wage level-based ranking approach to select H–1B registrations (or petitions in any year in which the registration requirement were suspended) that DHS proposes would affect how many petitions would be filed for workers to be employed in specialty occupations or whether the regulatory amendments herein would result in an overall change in the number of H–1B petitions that would ultimately be approved, and the number of H–1B workers who would be employed in the United States in any FY. DHS has no reason to believe that these proposed amendments to H–1B regulations would change the environmental effect, if any, of the existing regulations. Therefore, DHS has determined that even if NEPA were to apply to this action, this proposed rule clearly fits within categorical exclusion A3(d) in the Instruction Manual, which provides an exclusion for ''promulgation of rules . . . that amend an existing regulation without changing its environmental effect.'' This proposed rule would maintain the current human environment by proposing improvements to the H–1B program that would take effect during the economic crisis caused by COVID–19 in a way that would more effectively prevent an adverse impact from the employment of H–1B workers on the wages and working conditions of U.S. workers who would be similarly employed. This proposed rule is not a part of a larger action and presents no extraordinary circumstances creating the potential for significant environmental effects. Therefore, this action is categorically excluded and no further NEPA analysis is required.

H. Paperwork Reduction Act

1. USCIS H–1B Registration Tool

Under the Paperwork Reduction Act of 1995 (PRA), Public Law 104–13, all agencies are required to submit to OMB, for review and approval, any reporting requirements inherent in a rule. DHS and USCIS invite comments on the impact to the collection of information. In accordance with the PRA, the information collection notice is published in the **Federal Register** to obtain comments regarding the proposed edits to the information collection instrument.

Comments are encouraged and will be accepted for January 4, 2021. All submissions received must include the agency name and OMB Control Number 1615–0144 in the body of the submission. Comments on this information collection should address one or more of the following four points:

(1) Evaluate whether the collection of information is necessary for the proper performance of the functions of the agency, including whether the information will have practical utility;

(2) Evaluate the accuracy of the agency's estimate of the burden of the collection of information, including the validity of the methodology and assumptions used;

(3) Enhance the quality, utility, and clarity of the information to be collected; and

(4) Minimize the burden of the collection of information on those who are to respond, including through the use of appropriate automated, electronic, mechanical, or other technological collection techniques or other forms of information technology, *e.g.,* permitting electronic submission of responses.

Overview of Information Collection

(1) *Type of Information Collection:* Revision of a Currently Approved Collection.

(2) *Title of the Form/Collection:* H–1B Registration Tool.

(3) *Agency form number, if any, and the applicable component of the DHS sponsoring the collection:* OMB–64; USCIS.

(4) *Affected public who will be asked or required to respond, as well as a brief abstract:* Primary: Business or other for-profit. USCIS will use the data collected through the H–1B Registration Tool to select a sufficient number of registrations projected as needed to meet the applicable H–1B cap allocations and to notify registrants whether their registrations were selected.

(5) *An estimate of the total number of respondents and the amount of time estimated for an average respondent to respond:* The estimated total number of respondents for the information collection H–1B Registration Tool is 275,000 and the estimated hour burden per response is 0.833 hours.

(6) *An estimate of the total public burden (in hours) associated with the collection:* The total estimated annual hour burden associated with this collection of information is 229,075 hours.

(7) *An estimate of the total public burden (in cost) associated with the collection:* The estimated total annual cost burden associated with this collection of information is $0.

2. USCIS Form I–129 [111]

Under the PRA all agencies are required to submit to OMB, for review and approval, any reporting requirements inherent in a rule. DHS and USCIS invite comments on the impact to the collection of information. In accordance with the PRA, the information collection notice is published in the **Federal Register** to obtain comments regarding the proposed edits to the information collection instrument.

Comments are encouraged and will be accepted until January 4, 2021. All submissions received must include the agency name and OMB Control Number 1615–0009 in the body of the submission. Comments on this information collection should address one or more of the following four points:

(1) Evaluate whether the collection of information is necessary for the proper performance of the functions of the agency, including whether the information will have practical utility;

(2) Evaluate the accuracy of the agency's estimate of the burden of the collection of information, including the validity of the methodology and assumptions used;

(3) Enhance the quality, utility, and clarity of the information to be collected; and

(4) Minimize the burden of the collection of information on those who are to respond, including through the use of appropriate automated, electronic, mechanical, or other technological collection techniques or

[111] As indicated elsewhere in this rule, DHS estimates the costs and benefits of this proposed rule using the newly published Fee Schedule Final Rule, and related form changes, as the baseline. *See supra* note 66. The Fee Schedule Final Rule was scheduled to go into effect on October 2, 2020. On September 29, 2020, the U.S. District Court for the Northern District of California issued a nationwide injunction, which prevents DHS from implementing the Fee Schedule Final Rule. *See, Immigrant Legal Resource Center* v. *Wolf,* No. 4:20–cv–5883 (N.D. Cal. Sept. 29, 2020). In addition, on October 8, 2020, DHS was also preliminarily enjoined from implementing and enforcing the Fee Schedule Final Rule by the U.S. District Court for the District of Columbia, including by adopting any form changes associated with the rule. See, *Northwest Immigrant Rights Project* v. *U.S. Citizenship and Immigration Servs.,* 1:19–cv–03283–RDM (D.D.C. Oct. 8, 2020). While DHS intends to vigorously defend these lawsuits and is not changing the economic baseline for this proposed rule as a result of the litigation, it is using the currently approved Form I–129, and not the form version associated with the enjoined Fee Schedule Final Rule for the purpose of seeking OMB approval of form changes associated with this proposed rule. Should DHS prevail in the Fee Schedule Final Rule litigation and be able to implement the form changes associated with that rule, DHS will comply with the Paperwork Reduction Act and seek approval of the information collection changes associated with this proposed rule, based on the version of the Form I–129 that is in effect at that time.

other forms of information technology, for example, permitting electronic submission of responses.

Overview of Information Collection

(1) *Type of Information Collection:* Revision of a Currently Approved Collection.

(2) *Title of the Form/Collection:* Petition for a Nonimmigrant Worker.

(3) *Agency form number, if any, and the applicable component of the DHS sponsoring the collection:* I–129; USCIS.

(4) *Affected public who will be asked or required to respond, as well as a brief abstract: Primary:* Business or other for-profit. USCIS uses the data collected on this form to determine eligibility for the requested nonimmigrant petition and/or requests to extend or change nonimmigrant status. An employer (or agent, where applicable) uses this form to petition USCIS for an alien to temporarily enter as a nonimmigrant. An employer (or agent, where applicable) also uses this form to request an extension of stay or change of status on behalf of the alien worker. The form serves the purpose of standardizing requests for nonimmigrant workers and ensuring that basic information required for assessing eligibility is provided by the petitioner while requesting that beneficiaries be classified under certain nonimmigrant employment categories. It also assists USCIS in compiling information required by Congress annually to assess effectiveness and utilization of certain nonimmigrant classifications.

USCIS also uses the data to determine continued eligibility. For example, the data collected is used in compliance reviews and other inspections to ensure that all program requirements are being met.

(5) *An estimate of the total number of respondents and the amount of time estimated for an average respondent to respond:* I–129 is 294,751 and the estimated hour burden per response is 3.09 hours; the estimated total number of respondents for the information collection E–1/E–2 Classification Supplement to Form I–129 is 4,760 and the estimated hour burden per response is 0.67 hours; the estimated total number of respondents for the information collection Trade Agreement Supplement to Form I–129 is 3,057 and the estimated hour burden per response is 0.67 hours; the estimated total number of respondents for the information collection H Classification Supplement to Form I–129 is 96,291 and the estimated hour burden per response is 2 hours; the estimated total number of respondents for the information collection H–1B and H–1B1 Data Collection and Filing Fee Exemption Supplement is 96,291 and the estimated hour burden per response is 1 hour; the estimated total number of respondents for the information collection L Classification Supplement to Form I–129 is 37,831 and the estimated hour burden per response is 1.34 hours; the estimated total number of respondents for the information collection O and P Classifications Supplement to Form I–129 is 22,710 and the estimated hour burden per response is 1 hour; the estimated total number of respondents for the information collection Q–1 Classification Supplement to Form I–129 is 155 and the estimated hour burden per response is 0.34 hours; the estimated total number of respondents for the information collection R–1 Classification Supplement to Form I–129 is 6,635 and the estimated hour burden per response is 2.34 hours.

(6) *An estimate of the total public burden (in hours) associated with the collection:* The total estimated annual hour burden associated with this collection of information is 1,293,873 hours.

(7) *An estimate of the total public burden (in cost) associated with the collection:* The estimated total annual cost burden associated with this collection of information is $70,681,290.

I. Signature

The Acting Secretary of Homeland Security, Chad F. Wolf, having reviewed and approved this document, is delegating the authority to electronically sign this document to Chad R. Mizelle, who is the Senior Official Performing the Duties of the General Counsel for DHS, for purposes of publication in the **Federal Register**.

List of Subjects in 8 CFR Part 214

Administrative practice and procedure, Aliens, Cultural exchange programs, Employment, Foreign officials, Health professions, Reporting and recordkeeping requirements, Students.

Accordingly, DHS proposes to amend part 214 of chapter I of title 8 of the Code of Federal Regulations as follows:

PART 214—NONIMMIGRANT CLASSES

■ 1. The authority citation for part 214 continues to read as follows:

Authority: 6 U.S.C. 202, 236; 8 U.S.C. 1101, 1102, 1103, 1182, 1184, 1186a, 1187, 1221, 1281, 1282, 1301–1305 and 1372; sec. 643, Pub. L. 104–208, 110 Stat. 3009–708; Pub. L. 106–386, 114 Stat. 1477–1480; section 141 of the Compacts of Free Association with the Federated States of Micronesia and the Republic of the Marshall Islands, and with the Government of Palau, 48 U.S.C. 1901 note and 1931 note, respectively; 48 U.S.C. 1806; 8 CFR part 2; Pub. L. 115–218.

■ 2. Section 214.2 is amended by:
■ a. Revising the first sentence of paragraph (h)(8)(iii)(A)(*1*);
■ b. Adding paragraph (h)(8)(iii)(A)(*1*)(*i*) and reserved paragraph (h)(8)(iii)(A)(*1*)(*ii*);
■ c. In paragraph (h)(8)(iii)(A)(*5*)(*i*), revising the last two sentences and adding a sentence at the end;
■ d. In paragraph (h)(8)(iii)(A)(*5*)(*ii*), revising the last two sentences and adding a sentence at the end;
■ e. In paragraph (h)(8)(iii)(A)(*6*)(*i*), revising the last two sentences and adding a sentence at the end;
■ f. In paragraph (h)(8)(iii)(A)(*6*)(*ii*), revising the last two sentences and adding a sentence at the end;
■ g. Revising paragraphs (h)(8)(iii)(A)(*7*) and (h)(8)(iii)(D)(*1*);
■ h. In paragraph (h)(8)(iv)(B)(*1*), revising the last three sentences and adding three sentences at the end;
■ i. Revising paragraph (h)(8)(iv)(B)(*2*);
■ j. Removing and reserving paragraph (h)(8)(v);
■ k. In paragraph (h)(10)(ii), revising the second sentence and adding five sentences immediately following the second sentence;
■ l. Revising paragraph (h)(11)(iii)(A)(*2*);
■ m. Redesignating paragraphs (h)(11)(iii)(A)(*3*) through (*5*) as (h)(11)(iii)(A)(*4*) through (*6*); and
■ n. Adding a new paragraph (h)(11)(iii)(A)(*3*) and paragraph (h)(24)(i).

The revisions and additions read as follows:

§ 214.2 Special requirements for admission, extension, and maintenance of status.

* * * * *

(h) * * *

(8) * * *

(iii) * * *

(A)

(*1*) * * * Except as provided in paragraph (h)(8)(iv) of this section, before a petitioner is eligible to file an H–1B cap-subject petition for a beneficiary who may be counted under section 214(g)(1)(A) of the Act (''H–1B regular cap'') or eligible for exemption under section 214(g)(5)(C) of the Act (''H–1B advanced degree exemption''), the prospective petitioner or its attorney or accredited representative must register to file a petition on behalf of an alien beneficiary electronically through the USCIS website (*www.uscis.gov*).

* * *

(*i*) *Ranking by wage levels.* USCIS will rank and select registrations as set forth in paragraphs (h)(8)(iii)(A)(*5*) and (*6*) of this section. For purposes of the ranking and selection process, USCIS will use the highest corresponding Occupational Employment Statistics (OES) wage level that the proffered wage will equal or exceed for the relevant Standard Occupational Classification (SOC) code and area(s) of intended employment. If the proffered wage is lower than the OES wage level I, because it is based on a prevailing wage from another legitimate source (other than OES) or an independent authoritative source, USCIS will rank the registration in the same category as OES wage level I. If the H–1B beneficiary will work in multiple locations, or in multiple positions if the registrant is an agent, USCIS will rank and select the registration based on the lowest corresponding OES wage level that the proffered wage will equal or exceed. Where there is no current OES prevailing wage information for the proffered position, USCIS will rank and select the registration based on the OES wage level that corresponds to the requirements of the proffered position.

(*ii*) [Reserved]

* * * * *

(*5*) * * *

(*i*) * * * If USCIS has received more registrations on the final registration date than necessary to meet the H–1B regular cap under Section 214(g)(1)(A) of the Act, USCIS will rank and select from among all registrations properly submitted on the final registration date on the basis of the highest OES wage level that the proffered wage equals or exceeds for the relevant SOC code and area of intended employment, beginning with OES wage level IV and proceeding in descending order with OES wage levels III, II, and I. Where there is no current OES prevailing wage information for the proffered position, USCIS will rank and select petitions based on the appropriate wage level that corresponds to the requirements of the proffered position. If USCIS receives and ranks more registrations at a particular wage level than the projected number needed to meet the numerical limitation, USCIS will randomly select from all registrations within that particular wage level a sufficient number of registrations needed to reach the numerical limitation.

(*ii*) * * * If USCIS has received more than a sufficient number of registrations to meet the H–1B regular cap under Section 214(g)(1)(A) of the Act, USCIS will rank and select from among all registrations properly submitted during the initial registration period on the basis of the highest OES wage level that the proffered wage equals or exceeds for the relevant SOC code and area of intended employment, beginning with OES wage level IV and proceeding in descending order with OES wage levels III, II, and I. Where there is no current OES prevailing wage information for the proffered position, USCIS will rank and select petitions based on the appropriate wage level that corresponds to the requirements of the proffered position. If USCIS receives and ranks more registrations at a particular wage level than the projected number needed to meet the numerical limitation, USCIS will randomly select from all registrations within that particular wage level a sufficient number of registrations needed to reach the numerical limitation.

(*6*) * * *

(*i*) * * * If on the final registration date, USCIS has received more registrations than necessary to meet the H–1B advanced degree exemption limitation under Section 214(g)(5)(C) of the Act, USCIS will rank and select, from among the registrations properly submitted on the final registration date that may be counted against the advanced degree exemption, the number of registrations necessary to reach the H–1B advanced degree exemption on the basis of the highest OES wage level that the proffered wage equals or exceeds for the relevant SOC code and in the area of intended employment, beginning with OES wage level IV and proceeding in descending order with OES wage levels III, II, and I. Where there is no current OES prevailing wage information for the proffered position, USCIS will rank and select petitions based on the appropriate wage level that corresponds to the requirements of the proffered position. If USCIS receives and ranks more registrations at a particular wage level than the projected number needed to meet the numerical limitation, USCIS will randomly select from all registrations within that particular wage level a sufficient number of registrations necessary to reach the H–1B advanced degree exemption.

(*ii*) * * * USCIS will rank and select, from among the remaining registrations properly submitted during the initial registration period that may be counted against the advanced degree exemption numerical limitation, the number of registrations necessary to reach the H–1B advanced degree exemption on the basis of the highest OES wage level that the proffered wage equals or exceeds for the relevant SOC code and in the area of intended employment, beginning with OES wage level IV and proceeding in descending order with OES wage levels III, II, and I. Where there is no current OES prevailing wage information for the proffered position, USCIS will rank and select petitions based on the appropriate wage level that corresponds to the requirements of the proffered position. If USCIS receives and ranks more registrations at a particular wage level than the projected number needed to meet the numerical limitation, USCIS will randomly select from all registrations within that particular wage level a sufficient number of registrations necessary to reach the H–1B advanced degree exemption.

(*7*) *Increase to the number of registrations projected to meet the H–1B regular cap or advanced degree exemption allocations in a fiscal year.* Unselected registrations will remain on reserve for the applicable fiscal year. If USCIS determines that it needs to select additional registrations to receive the number of petitions projected to meet the numerical limitations, USCIS will select from among the registrations that are on reserve a sufficient number to meet the H–1B regular cap or advanced degree exemption numerical limitation, as applicable. If all of the registrations on reserve are selected and there are still fewer registrations than needed to reach the H–1B regular cap or advanced degree exemption numerical limitation, as applicable, USCIS may reopen the applicable registration period until USCIS determines that it has received a sufficient number of registrations projected to meet the H–1B regular cap or advanced degree exemption numerical limitation. USCIS will monitor the number of registrations received and will notify the public of the date that USCIS has received the necessary number of registrations (the new ''final registration date''). The day the public is notified will not control the applicable final registration date. When selecting additional registrations under this paragraph, USCIS will rank and select properly submitted registrations in accordance with paragraphs (h)(8)(iii)(A)(*1*), (*5*), and (*6*) of this section. If the registration period will be re-opened, USCIS will announce the start of the re-opened registration period on the USCIS website at *www.uscis.gov.*

* * * * *

(D) * * *

(*1*) *Filing procedures.* In addition to any other applicable requirements, a petitioner may file an H–1B petition for a beneficiary that may be counted under section 214(g)(1)(A) or eligible for exemption under section 214(g)(5)(C) of

the Act only if the petition is based on a valid registration submitted by the petitioner, or its designated representative, on behalf of the beneficiary that was selected beforehand by USCIS. The petition must be filed within the filing period indicated in the selection notice. A petitioner may not substitute the beneficiary named in the original registration or transfer the registration to another petitioner.

(*i*) If a petitioner files an H–1B cap-subject petition based on a registration that was not selected beforehand by USCIS, based on a registration for a different beneficiary than the beneficiary named in the petition, or based on a registration considered by USCIS to be invalid, the H–1B cap-subject petition will be rejected or denied. USCIS will consider a registration to be invalid if the registration fee associated with the registration is declined, rejected, or canceled after submission as the registration fee is non-refundable and due at the time the registration is submitted.

(*ii*) If USCIS determines that the statement of facts contained on the registration form is inaccurate, fraudulent, misrepresents any material fact, or is not true and correct, USCIS may reject or deny the petition or, if approved, may revoke the approval of a petition that was filed based on that registration.

(*iii*) USCIS also may deny or revoke approval of a subsequent new or amended petition filed by the petitioner, or a related entity, on behalf of the same beneficiary, if USCIS determines that the filing of the new or amended petition is part of the petitioner's attempt to unfairly decrease the proffered wage to an amount that would be equivalent to a lower wage level, after listing a higher wage level on the registration to increase the odds of selection. USCIS will not deny or revoke approval of such an amended or new petition solely on the basis of a different proffered wage if that wage does not correspond to a lower OES wage level than the wage level on which the registration selection was based.

* * * * *

(iv) * * *

(B) * * *

(*1*) * * * If the final receipt date is any of the first five business days on which petitions subject to the H–1B regular cap may be received, USCIS will select from among all the petitions properly submitted during the first five business days the number of petitions deemed necessary to meet the H–1B regular cap. If USCIS has received more petitions than necessary to meet the numerical limitation for the H–1B regular cap, USCIS will rank and select the petitions received on the basis of the highest Occupational Employment Statistics (OES) wage level that the proffered wage equals or exceeds for the relevant Standard Occupational Classification (SOC) code in the area of intended employment, beginning with OES wage level IV and proceeding in descending order with OES wage levels III, II, and I. Where there is no current OES prevailing wage information for the proffered position, USCIS will rank and select petitions based on the appropriate wage level that corresponds to the requirements of the proffered position. If the wage falls below an OES wage level I, USCIS will rank the petition in the same category as OES wage level I. USCIS will rank the petition in the same manner even if, instead of obtaining an OES prevailing wage, a petitioner elects to obtain a prevailing wage using another legitimate source (other than OES) or an independent authoritative source. If USCIS receives and ranks more petitions at a particular wage level than the projected number needed to meet the numerical limitation, USCIS will randomly select from among all eligible petitions within that particular wage level a sufficient number of petitions needed to reach the numerical limitation.

(*2*) *Advanced degree exemption selection in event of suspended registration process.* After USCIS has received a sufficient number of petitions to meet the H–1B regular cap and, as applicable, completed the selection process of petitions for the H–1B regular cap, USCIS will determine whether there is a sufficient number of remaining petitions to meet the H–1B advanced degree exemption numerical limitation. When calculating the number of petitions needed to meet the H–1B advanced degree exemption numerical limitation USCIS will take into account historical data related to approvals, denials, revocations, and other relevant factors. USCIS will monitor the number of petitions received and will announce on its website the date that it receives the number of petitions projected as needed to meet the H–1B advanced degree exemption numerical limitation (the ''final receipt date''). The date the announcement is posted will not control the final receipt date. If the final receipt date is any of the first five business days on which petitions subject to the H–1B advanced degree exemption may be received (in other words, if the numerical limitation is reached on any one of the first five business days that filings can be made), USCIS will select from among all the petitions properly submitted during the first five business days the number of petitions deemed necessary to meet the H–1B advanced degree exemption numerical limitation. If USCIS has received more petitions than necessary to meet the numerical limitation for the H–1B advanced degree exemption, USCIS will rank and select the petitions received on the basis of the highest Occupational Employment Statistics (OES) wage level that the proffered wage equals or exceeds for the relevant Standard Occupational Classification (SOC) code in the area of intended employment, beginning with OES wage level IV and proceeding with OES wage levels III, II, and I. Where there is no current OES prevailing wage information for the proffered position, USCIS will rank and select petitions based on the appropriate wage level that corresponds to the requirements of the proffered position. If the proffered wage is below an OES wage level I, USCIS will rank the petition in the same category as OES wage level I. USCIS will rank the petition in the same manner even if, instead of obtaining an OES prevailing wage, a petitioner elects to obtain a prevailing wage using another legitimate source (other than OES) or an independent authoritative source. If USCIS receives and ranks more petitions at a particular wage level than necessary to meet the numerical limitation for the H–1B advanced degree exemption, USCIS will randomly select from among all eligible petitions within that particular wage level a sufficient number of petitions needed to reach the numerical limitation.

* * * * *

(10) * * *

(ii) * * * The petition may be denied if it is determined that the statements on the registration or petition were inaccurate. The petition will be denied if it is determined that the statements on the registration or petition were fraudulent or misrepresented a material fact. A petition also may be denied if it is not based on a valid registration submitted by the petitioner (or its designated representative), or a successor in interest, for the beneficiary named in the petition. A valid registration must represent a legitimate job offer. USCIS also may deny a subsequent new or amended petition filed by the petitioner, or a related entity, on behalf of the same beneficiary, if USCIS determines that the filing of the new or amended petition is part of the petitioner's attempt to unfairly increase the odds of selection during the

registration or petition selection process, as applicable, such as by reducing the proffered wage to an amount that would be equivalent to a lower wage level than that indicated on the original petition. USCIS will not deny such an amended or new petition solely on the basis of a different proffered wage if that wage does not correspond to a lower OES wage level than the wage level on which the registration or petition selection, as applicable, was based. * * *

(11) * * *

(iii) * * *

(A) * * *

(*2*) The statement of facts contained in the petition; the registration, if applicable; or on the temporary labor certification or labor condition application; was not true and correct, inaccurate, fraudulent, or misrepresented a material fact; or

(*3*) The petitioner, or a related entity, filed a new or amended petition on behalf of the same beneficiary, if USCIS determines that the filing of the new or amended petition is part of the petitioner's attempt to unfairly increase the odds of selection during the registration or petition selection process, as applicable, such as by reducing the proffered wage to an amount that would be equivalent to a lower wage level than that indicated on the registration, or the original petition if the registration process was suspended. USCIS will not revoke approval of such an amended or new petition solely on the basis of a different proffered wage if that wage does not correspond to a lower OES wage level than the wage level on which the registration or petition selection, as applicable, was based; or

* * * * *

(24) * * *

(i) The requirement to submit a registration for an H–1B cap-subject petition and the selection process based on properly submitted registrations under paragraph (h)(8)(iii) of this section are intended to be severable from paragraph (h)(8)(iv) of this section. In the event paragraph (h)(8)(iii) is not implemented, or in the event that paragraph (h)(8)(iv) is not implemented, DHS intends that either of those provisions be implemented as an independent rule, without prejudice to petitioners in the United States under this section, as consistent with law.

* * * * *

Chad R. Mizelle,

Senior Official Performing the Duties of the General Counsel, U.S. Department of Homeland Security.

[FR Doc. 2020–24259 Filed 10–29–20; 12:15 pm]

BILLING CODE 9111–97–P

DEPARTMENT OF TRANSPORTATION

Federal Aviation Administration

14 CFR Part 27

[Docket No. FAA–2020–1011; Notice No. 27–051–SC]

Special Conditions: AgustaWestland Philadelphia Corporation, Leonardo S.p.A. Model A119 and AW119 MKII Helicopters; Pressure Refueling and Fueling Provisions

AGENCY: Federal Aviation Administration (FAA), DOT.

ACTION: Notice of proposed special conditions.

SUMMARY: This action proposes special conditions for the Leonardo S.p.A. (Leonardo) Model A119 and AW119 MKII helicopters. These helicopters as modified by AgustaWestland Philadelphia Corporation (AWPC) will have a novel or unusual design feature when compared to the state of technology envisioned in the airworthiness standards for helicopters. This design feature is the optional closed circuit refueling receiver (CCRR). The applicable airworthiness regulations do not contain adequate or appropriate safety standards for this design feature. These proposed special conditions contain the additional safety standards that the Administrator considers necessary to establish a level of safety equivalent to that established by the existing airworthiness standards.

DATES: Send comments on or before December 2, 2020.

ADDRESSES: Send comments identified by Docket No. FAA–2020–1011 using any of the following methods:

- *Federal eRegulations Portal:* Go to *http://www.regulations.gov/* and follow the online instructions for sending your comments electronically.
- *Mail:* Send comments to Docket Operations, M–30, U.S. Department of Transportation (DOT), 1200 New Jersey Avenue SE, Room W12–140, West Building Ground Floor, Washington, DC 20590–0001.
- *Hand Delivery or Courier:* Take comments to Docket Operations in Room W12–140 of the West Building Ground Floor at 1200 New Jersey Avenue SE, Washington, DC, between 9 a.m. and 5 p.m., Monday through Friday, except Federal holidays.
- *Fax:* Fax comments to Docket Operations at 202–493–2251.

Privacy: Except for Confidential Business Information (CBI) as described in the following paragraph, and other information as described in 14 CFR 11.35, the FAA will post all comments it receives, without change, to *http://regulations.gov,* including any personal information the commenter provides. Using the search function of the docket website, anyone can find and read the electronic form of all comments received into any FAA docket, including the name of the individual sending the comment (or signing the comment for an association, business, labor union, etc.). DOT's complete Privacy Act Statement can be found in the **Federal Register** published on April 11, 2000 (65 FR 19477–19478).

Confidential Business Information: CBI is commercial or financial information that is both customarily and actually treated as private by its owner. Under the Freedom of Information Act (FOIA) (5 U.S.C. 552), CBI is exempt from public disclosure. If your comments responsive to these special conditions contain commercial or financial information that is customarily treated as private, that you actually treat as private, and that is relevant or responsive to these special conditions, it is important that you clearly designate the submitted comments as CBI.

Please mark each page of your submission containing CBI as ''PROPIN.'' The FAA will treat such marked submissions as confidential under the FOIA, and they will not be placed in the public docket of these special conditions. Submissions containing CBI should be sent to Rao Edupuganti, Regulations and Policy Section, AIR–681, Rotorcraft Standards Branch, Policy and Innovation Division, Aircraft Certification Service, 10101 Hillwood Parkway, Fort Worth, Texas 76177; telephone (817) 222–4389; facsimile (817) 222–5961. Any commentary that the FAA receives which is not specifically designated as CBI will be placed in the public docket for this rulemaking.

Docket: Background documents or comments received may be read at *http://www.regulations.gov/* at any time. Follow the online instructions for accessing the docket or go to Docket Operations in Room W12–140 of the West Building Ground Floor at 1200 New Jersey Avenue SE, Washington,

DC, between 9 a.m. and 5 p.m., Monday through Friday, except Federal holidays.

FOR FURTHER INFORMATION CONTACT: Rao Edupuganti, Regulations and Policy Section, AIR–681, Rotorcraft Standards Branch, Policy and Innovation Division, Aircraft Certification Service, 10101 Hillwood Parkway, Fort Worth, Texas 76177; telephone (817) 222–4389; facsimile (817) 222–5961.

SUPPLEMENTARY INFORMATION:

Comments Invited

The FAA invites interested people to take part in this rulemaking by sending written comments, data, or views. The most helpful comments reference a specific portion of the special conditions, explain the reason for any recommended change, and include supporting data.

The FAA will consider all comments received by the closing date for comments. The FAA may change these special conditions based on the comments received.

Background

On January 30, 2020, AWPC applied for a supplemental type certificate to install an optional CCRR in the Leonardo Model A119 and AW119 MKII helicopters. The general configuration and the principles of construction of these helicopters will not be changed by the proposed modifications. These helicopters are 14 CFR part 27 normal category helicopters powered by turboshaft engines, with a 7-passenger maximum capacity and minimum crew of one pilot and a maximum weight of 5,997 lb (2,720 kg) and 6,283 lb (2,850 kg), respectively. The total useable fuel capacity of the Leonardo Model A119 and AW119 MKII helicopters is 157.0 U.S. gallons distributed within the fuel tanks. Both helicopter models are powered by one Pratt & Whitney Canada Inc. PT6B–37A turboshaft engine.

Part 27 does not contain requirements for pressure refueling for normal category helicopters. 14 CFR 29.979, amendment 29–12, provides these requirements for transport category helicopters. Accordingly, these special conditions are based on § 29.979 to provide requirements for the inclusion of the optional CCRR on the Leonardo Model A119 and AW119 MKII helicopters.

Type Certification Basis

Under the provisions of 14 CFR 21.101, AWPC must show that the Leonardo Model A119 and AW119 MKII helicopters, as changed, continue to meet the applicable provisions of the regulations listed in Type Certificate No. H7EU or the applicable regulations in effect on the date of application for the change. The regulations incorporated by reference in the type certificate are commonly referred to as the ''original type certification basis.'' The certification basis also includes certain special conditions, exemptions, or later amended sections of the applicable part that are not relevant to these proposed special conditions.

If the Administrator finds that the applicable airworthiness regulations do not contain adequate or appropriate safety standards for the Leonardo Model A119 and AW119 MKII helicopters because of a novel or unusual design feature, special conditions are prescribed under the provisions of § 21.16.

Special conditions are initially applicable to the model for which they are issued. Should the applicant apply for a supplemental type certificate to modify any other model included on the same type certificate to incorporate the same novel or unusual design feature, these special conditions would also apply to the other model under § 21.101.

The FAA issues special conditions, as defined in 14 CFR 11.19, in accordance with § 11.38, and they become part of the type certification basis under § 21.101.

Novel or Unusual Design Feature

The Leonardo Model A119 and AW119 MKII helicopters will incorporate the following novel or unusual design feature: An optional CCRR system that allows for pressure refueling.

Discussion

AWPC proposes to install an optional CCRR system that includes provisions for pressure refueling during ground operations with the engine running and the rotors turning. The design proposed by AWPC allows for both closed-circuit pressure and normal gravity refueling and fueling. In this design, the ground crew will be able to perform closed-circuit pressure refueling by pulling the receiver into place using the provided lanyard tool after the fuel filler cap is opened. When gravity fueling is desired, a latch is depressed using the same lanyard tool. Depressing the latch causes the receiver to swing open to accommodate any nozzle up to three inches in diameter. The CCRR system is currently certified on the Leonardo Model AW139 transport category helicopter. Relative to the Model AW139 installation, the proposed Model A119 and AW119 MKII installations will be clocked 25 degrees counter-clockwise, and the receptacle flange will be offset approximately two inches outboard of the fuselage profile due to packaging constraints. The mechanical components and functional aspects of the Model A119 and AW119 MKII CCRR installations are unchanged from the previously certified AW139 installation.

The part 27 airworthiness regulations in the type certification basis do not contain appropriate safety standards for this design feature. However, part 29 regulations contain appropriate airworthiness standards; therefore, these special conditions are necessary. They are derived from 14 CFR 29.979, ''Pressure refueling and fueling provisions below fuel level.''

Section 29.979, amendment 29–12, effective February 1, 1977, includes standards for pressure refueling and fueling provisions below fuel level on transport category helicopters. This regulation is intended to prevent hazards to ground crew, flight crew, and occupants by reducing the probability of exposure to hazardous quantities of fuel due to spillage. This regulation also ensures the pressure refueling/defueling system is designed to prevent overfilling the fuel tank and to withstand an ultimate load overpressure event without failure.

Section 29.979(a) requires that each fueling connection below the fuel level in each tank have means to prevent the escape of hazardous quantities of fuel from that tank in case of malfunction of the fuel entry valve. The only refueling connection on the Leonardo Model A119 and AW119 MKII helicopters is located above the fuel level of the single main upper, two main lower, and optional two auxiliary fuel tanks. As the proposed modification by AWPC does not move the existing refueling connection below the fuel line of any fuel tank, these special conditions do not include a requirement derived from 14 CFR 29.979(a).

Section 29.979(b) requires that systems intended for pressure refueling and fueling have a means in addition to the normal means for limiting the tank content to prevent damage to the tank in case of failure of the normal means.

Section 29.979(c) requires that the helicopter pressure fueling system (not fuel tanks and fuel tank vents) withstand an ultimate load that is 2.0 times the load arising from the maximum pressure, including surge, likely to occur during fueling. The maximum surge pressure must be established with any combination of tank valves being either intentionally or inadvertently closed.

Section 29.979(d) requires that the helicopter defueling system (not including fuel tanks and fuel tank vents)

withstand an ultimate load that is 2.0 times the load arising from the maximum permissible defueling pressure (positive or negative) at the helicopter's fueling connection. As the design proposed by AWPC does not include a defueling capability, these special conditions do not include a requirement derived from 14 CFR 29.979(d).

These proposed special conditions contain the additional safety standards that the Administrator considers necessary to establish a level of safety equivalent to that established by the existing airworthiness standards.

Applicability

As discussed above, these proposed special conditions are applicable to Leonardo Model A119 and AW119 MKII helicopters. Should AWPC apply at a later date for a supplemental type certificate to modify any other model included on Type Certificate No. H7EU to incorporate the same novel or unusual design feature, these special conditions would apply to that model as well.

Conclusion

This action affects only one novel or unusual design feature on the Leonardo Model A119 and AW119 MKII helicopters. It is not a rule of general applicability and affects only the applicant who applied to the FAA for approval of this feature on these helicopters.

List of Subjects in 14 CFR Part 29

Aircraft, Aviation safety, Reporting and recordkeeping requirements.

Authority Citation

The authority citation for these special conditions is as follows:

Authority: 49 U.S.C. 106(f), 106(g), 40113, 44701, 44702, 44704.

The Proposed Special Conditions

Accordingly, the Federal Aviation Administration proposes the following special conditions as part of the type certification basis for Leonardo S.p.A. Model A119 and AW119 MKII helicopters, as modified by AgustaWestland Philadelphia Corporation.

The pressure refueling system must be designed and installed as follows:

(a) For systems intended for pressure refueling, a means in addition to the normal means for limiting the tank content must be installed to prevent damage to the fuel tank in case of failure of the normal means.

(b) The helicopter pressure fueling system (not fuel tanks and fuel tank vents) must withstand an ultimate load that is 2.0 times the load arising from maximum pressure, including surge, that is likely to occur during fueling. The maximum surge pressure must be established with any combination of tank valves being either intentionally or inadvertently closed.

Issued in Fort Worth, Texas on October 27, 2020.

Jorge Castillo,

Manager, Rotorcraft Standards Branch, AIR–680, Policy & Innovation Division, Aircraft Certification Service.

[FR Doc. 2020–24175 Filed 10–30–20; 8:45 am]

BILLING CODE 4910–13–P

DEPARTMENT OF TRANSPORTATION

Federal Aviation Administration

14 CFR Part 39

[Docket No. FAA–2020–0974; Project Identifier MCAI–2020–00273–R]

RIN 2120–AA64

Airworthiness Directives; Airbus Helicopters

AGENCY: Federal Aviation Administration (FAA), DOT.

ACTION: Notice of proposed rulemaking (NPRM).

SUMMARY: The FAA proposes to adopt a new airworthiness directive (AD) for all Airbus Helicopters Model EC 155B and EC155B1 helicopters. This proposed AD was prompted by a report that non-destructive tests of the main gearbox (MGB) housing may have been evaluated incorrectly during production. This proposed AD would require replacing affected MGBs with serviceable MGBs, as specified in a European Union Aviation Safety Agency (EASA) AD, which will be incorporated by reference. The FAA is proposing this AD to address the unsafe condition on these products.

DATES: The FAA must receive comments on this proposed AD by December 17, 2020.

ADDRESSES: You may send comments, using the procedures found in 14 CFR 11.43 and 11.45, by any of the following methods:

- *Federal eRulemaking Portal:* Go to *https://www.regulations.gov.* Follow the instructions for submitting comments.
- *Fax:* 202–493–2251.
- *Mail:* U.S. Department of Transportation, Docket Operations, M–30, West Building Ground Floor, Room W12–140, 1200 New Jersey Avenue SE, Washington, DC 20590.
- *Hand Delivery:* Deliver to Mail address above between 9 a.m. and 5 p.m., Monday through Friday, except Federal holidays.

For material incorporated by reference (IBR) in this AD, contact the EASA, Konrad-Adenauer-Ufer 3, 50668 Cologne, Germany; telephone +49 221 89990 1000; email *ADs@easa.europa.eu;* internet *www.easa.europa.eu.* You may find this IBR material on the EASA website at *https://ad.easa.europa.eu.* You may view this IBR material at the FAA, Office of the Regional Counsel, Southwest Region, 10101 Hillwood Pkwy., Room 6N–321, Fort Worth, TX 76177. For information on the availability of this material at the FAA, call 817–222–5110. It is also available in the AD docket on the internet at *https://www.regulations.gov* by searching for and locating Docket No. FAA–2020–0974.

Examining the AD Docket

You may examine the AD docket on the internet at *https://www.regulations.gov* by searching for and locating Docket No. FAA–2020–0974; or in person at Docket Operations between 9 a.m. and 5 p.m., Monday through Friday, except Federal holidays. The AD docket contains this NPRM, any comments received, and other information. The street address for Docket Operations is listed above. Comments will be available in the AD docket shortly after receipt.

FOR FURTHER INFORMATION CONTACT: Hal Jensen, Aerospace Engineer, Operational Safety Branch, FAA, 470 L'Enfant Plaza SW, Washington, DC 20024; telephone 202–267–9167; email *hal.jensen@faa.gov.*

SUPPLEMENTARY INFORMATION:

Comments Invited

The FAA invites you to participate in this rulemaking by submitting written comments, data, or views about this proposal. The most helpful comments reference a specific portion of the proposal, explain the reason for any recommended change, and include supporting data. To ensure the docket does not contain duplicate comments, commenters should submit only one copy of the comments. Send your comments to an address listed under the **ADDRESSES** section. Include ''Docket No. FAA–2020–0974; Project Identifier MCAI–2020–00273–R'' at the beginning of your comments.

Except for Confidential Business Information (CBI) as described in the following paragraph, and other information as described in 14 CFR 11.35, the FAA will post all comments

received, without change, as well as a report summarizing each substantive public contact with FAA personnel concerning this proposed rulemaking. Before acting on this proposal, the FAA will consider all comments received by the closing date for comments. The FAA will consider comments filed after the comment period has closed if it is possible to do so without incurring expense or delay. The FAA may change this NPRM because of those comments.

Confidential Business Information

CBI is commercial or financial information that is both customarily and actually treated as private by its owner. Under the Freedom of Information Act (FOIA) (5 U.S.C. 552), CBI is exempt from public disclosure. If your comments responsive to this NPRM contain commercial or financial information that is customarily treated as private, that you actually treat as private, and that is relevant or responsive to this NPRM, it is important that you clearly designate the submitted comments as CBI. Please mark each page of your submission containing CBI as ''PROPIN.'' The FAA will treat such marked submissions as confidential under the FOIA, and they will not be placed in the public docket of this NPRM. Submissions containing CBI should be sent to Hal Jensen, Aerospace Engineer, Operational Safety Branch, FAA, 470 L'Enfant Plaza SW, Washington, DC 20024; telephone 202–267–9167; email *hal.jensen@faa.gov.* Any commentary that the FAA receives that is not specifically designated as CBI will be placed in the public docket for this rulemaking.

Discussion

The EASA, which is the Technical Agent for the Member States of the European Union, has issued EASA AD 2020–0043, dated March 2, 2020 (EASA AD 2020–0043) (also referred to as the Mandatory Continuing Airworthiness Information, or the MCAI), to correct an unsafe condition for all Airbus Helicopters Model EC 155 B and EC 155 B1 helicopters.

This proposed AD was prompted by a report that non-destructive tests of the MGB housing may have been evaluated incorrectly during production. The FAA is proposing this AD to address failure of the affected MGB housing, possibly resulting in reduced control of the helicopter. See the MCAI for additional background information.

Related Service Information Under 1 CFR Part 51

EASA AD 2020–0043 describes procedures for replacing affected MGBs with serviceable MGBs.

This material is reasonably available because the interested parties have access to it through their normal course of business or by the means identified in the **ADDRESSES** section.

FAA's Determination and Requirements of This Proposed AD

This product has been approved by the aviation authority of another country, and is approved for operation in the United States. Pursuant to the bilateral agreement with the State of Design Authority, the FAA has been notified of the unsafe condition described in the MCAI referenced above. The FAA is proposing this AD because the FAA evaluated all the relevant information and determined the unsafe condition described previously is likely to exist or develop in other products of the same type design.

Proposed AD Requirements

This proposed AD would require accomplishing the actions specified in EASA AD 2020–0043, described previously, as incorporated by reference, except for any differences identified as exceptions in the regulatory text of this AD and except as discussed under ''Differences Between this Proposed AD and the MCAI.''

Explanation of Required Compliance Information

In the FAA's ongoing efforts to improve the efficiency of the AD process, the FAA initially worked with Airbus and EASA to develop a process to use certain EASA ADs as the primary source of information for compliance with requirements for corresponding FAA ADs. The FAA has since coordinated with other manufacturers and civil aviation authorities (CAAs) to use this process. As a result, EASA AD 2020–0043 will be incorporated by reference in the FAA final rule. This proposed AD would, therefore, require compliance with EASA AD 2020–0043 in its entirety, through that incorporation, except for any differences identified as exceptions in the regulatory text of this proposed AD. Using common terms that are the same as the heading of a particular section in the EASA AD does not mean that operators need comply only with that section. For example, where the AD requirement refers to ''all required actions and compliance times,'' compliance with this AD requirement is not limited to the section titled ''Required Action(s) and Compliance Time(s)'' in the EASA AD. Service information specified in EASA AD 2020–0043 that is required for compliance with EASA AD 2020–0043 will be available on the internet at *https://www.regulations.gov* by searching for and locating Docket No. FAA–2020–0974 after the FAA final rule is published.

Differences Between This Proposed AD and the MCAI

EASA AD 2020–0043 specifies to do the replacement ''within 10 flight hours or 75 days, whichever occurs first.'' The compliance time for this proposed AD is within 10 hours time-in-service.

Costs of Compliance

The FAA estimates that this proposed AD affects 18 helicopters of U.S. registry. The FAA estimates the following costs to comply with this proposed AD:

ESTIMATED COSTS FOR REQUIRED ACTIONS

Labor cost	Parts cost	Cost per product	Cost on U.S. operators
40 work-hours × $85 per hour = $3,400	$141,137	$144,537	$2,601,666

Authority for This Rulemaking

Title 49 of the United States Code specifies the FAA's authority to issue rules on aviation safety. Subtitle I, section 106, describes the authority of the FAA Administrator. Subtitle VII: Aviation Programs, describes in more detail the scope of the Agency's authority.

The FAA is issuing this rulemaking under the authority described in Subtitle VII, Part A, Subpart III, Section 44701: General requirements. Under that section, Congress charges the FAA

with promoting safe flight of civil aircraft in air commerce by prescribing regulations for practices, methods, and procedures the Administrator finds necessary for safety in air commerce. This regulation is within the scope of that authority because it addresses an unsafe condition that is likely to exist or develop on products identified in this rulemaking action.

Regulatory Findings

The FAA determined that this proposed AD would not have federalism implications under Executive Order 13132. This proposed AD would not have a substantial direct effect on the States, on the relationship between the national Government and the States, or on the distribution of power and responsibilities among the various levels of government.

For the reasons discussed above, I certify this proposed regulation:

(1) Is not a ''significant regulatory action'' under Executive Order 12866,

(2) Will not affect intrastate aviation in Alaska, and

(3) Will not have a significant economic impact, positive or negative, on a substantial number of small entities under the criteria of the Regulatory Flexibility Act.

List of Subjects in 14 CFR Part 39

Air transportation, Aircraft, Aviation safety, Incorporation by reference, Safety.

The Proposed Amendment

Accordingly, under the authority delegated to me by the Administrator, the FAA proposes to amend 14 CFR part 39 as follows:

PART 39—AIRWORTHINESS DIRECTIVES

■ 1. The authority citation for part 39 continues to read as follows:

Authority: 49 U.S.C. 106(g), 40113, 44701.

§ 39.13 [Amended]

■ 2. The FAA amends § 39.13 by adding the following new airworthiness directive (AD):

Airbus Helicopters: Docket No. FAA–2020–0974; Project Identifier MCAI–2020–00273–R.

(a) Comments Due Date

The FAA must receive comments by December 17, 2020.

(b) Affected ADs

None.

(c) Applicability

This AD applies to all Airbus Helicopters Model EC 155B and EC155B1 helicopters, certificated in any category.

(d) Subject

Joint Aircraft System Component (JASC) Code 6320, Main Rotor Gearbox.

(e) Reason

This AD was prompted by a report that non-destructive tests of the main gearbox (MGB) housing may have been evaluated incorrectly during production. The FAA is issuing this AD to address failure of the affected MGB housing, possibly resulting in reduced control of the helicopter.

(f) Compliance

Comply with this AD within the compliance times specified, unless already done.

(g) Requirements

Except as specified in paragraph (h) of this AD: Comply with all required actions and compliance times specified in, and in accordance with, European Union Aviation Safety Agency (EASA) AD 2020–0043, dated March 2, 2020 (EASA AD 2020–0043).

(h) Exceptions to EASA AD 2020–0043

(1) Where EASA AD 2020–0043 refers to its effective date, this AD requires using the effective date of this AD.

(2) Where EASA AD 2020–0043 specifies to do the replacement ''within 10 flight hours or 75 days, whichever occurs first after the effective date of this AD,'' for this AD, the compliance time for the replacement is within 10 hours time-in-service after the effective date of this AD.

(3) Although the service information referenced in EASA AD 2020–0043 specifies to return certain parts, this AD does not include that requirement.

(4) The ''Remarks'' section of EASA AD 2020–0043 does not apply to this AD.

(i) Alternative Methods of Compliance (AMOCs):

The Manager, Rotorcraft Standards Branch, FAA, may approve AMOCs for this AD. Send your proposal to: Manager, Rotorcraft Standards Branch, FAA, 10101 Hillwood Pkwy., Fort Worth, TX 76177; telephone 817–222–5110; email *9-ASW-FTW-AMOC-Requests@faa.gov.*

(j) Related Information

(1) For EASA AD 2020–0043, contact the EASA, Konrad-Adenauer-Ufer 3, 50668 Cologne, Germany; telephone +49 221 89990 6017; email *ADs@easa.europa.eu;* internet *www.easa.europa.eu.* You may find this EASA AD on the EASA website at *https://ad.easa.europa.eu.* You may view this material at the FAA, Office of the Regional Counsel, Southwest Region, 10101 Hillwood Pkwy., Room 6N–321, Fort Worth, TX 76177. For information on the availability of this material at the FAA, call 817–222–5110. This material may be found in the AD docket on the internet at *https://www.regulations.gov* by searching for and locating Docket No. FAA–2020–0974.

(2) For more information about this AD, contact Hal Jensen, Aerospace Engineer, Operational Safety Branch, FAA, 470 L'Enfant Plaza SW, Washington, DC 20024; telephone 202–267–9167; email *hal.jensen@faa.gov.*

Issued on October 26, 2020.

Lance T. Gant,

Director, Compliance & Airworthiness Division, Aircraft Certification Service.

[FR Doc. 2020–24103 Filed 10–30–20; 8:45 am]

BILLING CODE 4910–13–P

DEPARTMENT OF TRANSPORTATION

Federal Aviation Administration

14 CFR Part 39

[Docket No. FAA–2020–0977; Project Identifier MCAI–2020–01106–T]

RIN 2120–AA64

Airworthiness Directives; Dassault Aviation Airplanes

AGENCY: Federal Aviation Administration (FAA), DOT.

ACTION: Notice of proposed rulemaking (NPRM).

SUMMARY: The FAA proposes to supersede Airworthiness Directive (AD) 2019–03–27, which applies to all Dassault Aviation Model Falcon 10 airplanes. AD 2019–03–27 requires repetitive detailed inspections of certain wing anti-ice outboard flexible hoses, and replacement of certain wing anti-ice outboard flexible hoses. Since the FAA issued AD 2019–03–27, an improved wing anti-ice flexible hose has been developed. This proposed AD would continue to require the actions in AD 2019–03–27, and would add a new life limit for the improved wing anti-ice flexible hose, as specified in a European Union Aviation Safety Agency (EASA) AD, which will be incorporated by reference. The FAA is proposing this AD to address the unsafe condition on these products.

DATES: The FAA must receive comments on this proposed AD by December 17, 2020.

ADDRESSES: You may send comments, using the procedures found in 14 CFR 11.43 and 11.45, by any of the following methods:

- *Federal eRulemaking Portal:* Go to *https://www.regulations.gov.* Follow the instructions for submitting comments.
- Fax: 202–493–2251.
- *Mail:* U.S. Department of Transportation, Docket Operations, M–30, West Building Ground Floor, Room W12–140, 1200 New Jersey Avenue SE, Washington, DC 20590.
- *Hand Delivery:* Deliver to Mail address above between 9 a.m. and 5 p.m., Monday through Friday, except Federal holidays.

For the material identified in this proposed AD that will be incorporated

by reference (IBR), contact the EASA, Konrad-Adenauer-Ufer 3, 50668 Cologne, Germany; phone: +49 221 8999 000; email: *ADs@easa.europa.eu*; internet: *www.easa.europa.eu*. You may find this IBR material on the EASA website at *https://ad.easa.europa.eu*. You may view this IBR material at the FAA, Airworthiness Products Section, Operational Safety Branch, 2200 South 216th St., Des Moines, WA. For information on the availability of this material at the FAA, call 206–231–3195. It is also available in the AD docket on the internet at *https://www.regulations.gov* by searching for and locating Docket No. FAA–2020–0977.

Examining the AD Docket

You may examine the AD docket on the internet at *https://www.regulations.gov* by searching for and locating Docket No. FAA–2020–0977; or in person at Docket Operations between 9 a.m. and 5 p.m., Monday through Friday, except Federal holidays. The AD docket contains this NPRM, any comments received, and other information. The street address for Docket Operations is listed above. Comments will be available in the AD docket shortly after receipt.

FOR FURTHER INFORMATION CONTACT: Tom Rodriguez, Aerospace Engineer, Large Aircraft Section, International Validation Branch, FAA, 2200 South 216th St., Des Moines, WA 98198; phone and fax: 206–231–3226; email: *tom.rodriguez@faa.gov*.

SUPPLEMENTARY INFORMATION:

Comments Invited

The FAA invites you to participate in this rulemaking by submitting written comments, data, or views about this proposal. The most helpful comments reference a specific portion of the proposal, explain the reason for any recommended change, and include supporting data. To ensure the docket does not contain duplicate comments, commenters should send only one copy of written comments, or if comments are filed electronically, commenters should submit only one time. Send your comments to an address listed under the **ADDRESSES** section. Include ''Docket No. FAA–2020–0977; Project Identifier MCAI–2020–01106–T'' at the beginning of your comments.

Except for Confidential Business Information (CBI) as described in the following paragraph, and other information as described in 14 CFR 11.35, the FAA will post all comments received, without change, as well as a report summarizing each substantive public contact with FAA personnel concerning this proposed rulemaking. Before acting on this proposal, the FAA will consider all comments received by the closing date for comments. The FAA will consider comments filed after the comment period has closed if it is possible to do so without incurring expense or delay. The FAA may change this NPRM because of those comments.

Confidential Business Information

CBI is commercial or financial information that is both customarily and actually treated as private by its owner. Under the Freedom of Information Act (FOIA) (5 U.S.C. 552), CBI is exempt from public disclosure. If your comments responsive to this NPRM contain commercial or financial information that is customarily treated as private, that you actually treat as private, and that is relevant or responsive to this NPRM, it is important that you clearly designate the submitted comments as CBI. Please mark each page of your submission containing CBI as ''PROPIN.'' The FAA will treat such marked submissions as confidential under the FOIA, and they will not be placed in the public docket of this NPRM. Submissions containing CBI should be sent to Tom Rodriguez, Aerospace Engineer, Large Aircraft Section, International Validation Branch, FAA, 2200 South 216th St., Des Moines, WA 98198; phone and fax: 206–231–3226; email: *tom.rodriguez@faa.gov*. Any commentary that the FAA receives which is not specifically designated as CBI will be placed in the public docket for this rulemaking.

Discussion

The FAA issued AD 2019–03–27, Amendment 39–19579 (84 FR 7801, March 5, 2019) (''AD 2019–03–27''), which applies to all Dassault Aviation Model Falcon 10 airplanes. AD 2019–03–27 requires repetitive detailed inspections of certain wing anti-ice outboard flexible hoses, and replacement of certain wing anti-ice outboard flexible hoses. The FAA issued AD 2019–03–27 to address damaged wing anti-ice outboard flexible hoses, which could lead to a loss of performance of the wing anti-ice protection system that is not annunciated to the pilot, and could result in reduced control of the airplane.

Actions Since AD 2019–03–27 Was Issued

Since the FAA issued AD 2019–03–27, an improved wing anti-ice flexible hose has been developed which has the same life limit as other wing anti-ice outboard flexible hoses. The FAA has determined that the improved wing anti-ice flexible hose may be installed on airplanes and that a life limit for the improved wing anti-ice flexible hose must be implemented.

The EASA, which is the Technical Agent for the Member States of the European Union, has issued EASA AD 2020–0127, dated June 4, 2020 (''EASA AD 2020–0127'') (also referred to as the Mandatory Continuing Airworthiness Information, or ''the MCAI''), to correct an unsafe condition for all Dassault Aviation Model Falcon 10 airplanes. EASA AD 2020–0127 supersedes EASA AD 2019–0040–E, dated February 21, 2019 (which corresponds to AD 2019–03–27).

This proposed AD was prompted by a report indicating that certain wing anti-ice outboard flexible hoses were found damaged, likely resulting from the installation process, and the development of an improved wing anti-ice flexible hose. The FAA is proposing this AD to address damaged wing anti-ice outboard flexible hoses, which could lead to a loss of performance of the wing anti-ice protection system that is not annunciated to the pilot, and could result in reduced control of the airplane. See the MCAI for additional background information.

Explanation of Retained Requirements

Although this proposed AD does not explicitly restate the requirements of AD 2019–03–27, this proposed AD would retain all of the requirements of AD 2019–03–27. Those requirements are referenced in EASA AD 2020–0127, which, in turn, is referenced in paragraph (g) of this proposed AD.

Related Service Information Under 1 CFR Part 51

EASA AD 2020–0127 describes procedures for repetitive detailed inspections of certain wing anti-ice outboard flexible hoses, replacement of certain wing anti-ice outboard flexible hoses, a new life limit for certain wing anti-ice outboard flexible hoses, and optional terminating actions for the repetitive inspections (replacement of all damaged affected wing anti-ice outboard flexible hoses or accomplishing and passing an inspection on an affected wing anti-ice outboard flexible hose after it has accumulated 100 flight cycles since installation on an airplane). This material is reasonably available because the interested parties have access to it through their normal course of business or by the means identified in the **ADDRESSES** section.

FAA's Determination and Requirements of This Proposed AD

This product has been approved by the aviation authority of another country, and is approved for operation in the United States. Pursuant to the FAA's bilateral agreement with the State of Design Authority, the FAA has been notified of the unsafe condition described in the MCAI referenced above. The FAA is proposing this AD because the FAA evaluated all pertinent information and determined an unsafe condition exists and is likely to exist or develop on other products of the same type design.

Proposed AD Requirements

This proposed AD would require accomplishing the actions specified in EASA AD 2020–0127 described previously, as incorporated by reference, except for any differences identified as exceptions in the regulatory text of this AD.

Explanation of Required Compliance Information

In the FAA's ongoing efforts to improve the efficiency of the AD process, the FAA initially worked with Airbus and EASA to develop a process to use certain EASA ADs as the primary source of information for compliance with requirements for corresponding FAA ADs. The FAA has since coordinated with other manufacturers and civil aviation authorities (CAAs) to use this process. As a result, EASA AD 2020–0127 will be incorporated by reference in the FAA final rule. This proposed AD would, therefore, require compliance with EASA AD 2020–0127 in its entirety, through that incorporation, except for any differences identified as exceptions in the regulatory text of this proposed AD. Using common terms that are the same as the heading of a particular section in the EASA AD does not mean that operators need comply only with that section. For example, where the AD requirement refers to ''all required actions and compliance times,'' compliance with this AD requirement is not limited to the section titled ''Required Action(s) and Compliance Time(s)'' in the EASA AD. Service information specified in EASA AD 2020–0127 that is required for compliance with EASA AD 2020–0127 will be available on the internet at *https://www.regulations.gov* by searching for and locating Docket No. FAA–2020–0977 after the FAA final rule is published.

Costs of Compliance

The FAA estimates that this proposed AD affects 54 airplanes of U.S. registry. The FAA estimates the following costs to comply with this proposed AD:

ESTIMATED COSTS FOR REQUIRED ACTIONS

Action	Labor cost	Parts cost	Cost per product	Cost on U.S. operators
Retained actions from AD 2019-03-27	9 work-hours × $85 per hour = $765	$0	$765	$41,310
New proposed actions	9 work-hours × $85 per hour = $765	316	1,081	58,374

The FAA estimates the following costs to do any necessary on-condition replacements that would be required based on the results of any required actions. The FAA has no way of determining the number of aircraft that might need these on-condition replacements:

ESTIMATED COSTS OF ON-CONDITION ACTIONS

Labor cost	Parts cost	Cost per product
9 work-hours × $85 per hour = $765	$316	$1,081

Authority for This Rulemaking

Title 49 of the United States Code specifies the FAA's authority to issue rules on aviation safety. Subtitle I, section 106, describes the authority of the FAA Administrator. Subtitle VII: Aviation Programs, describes in more detail the scope of the Agency's authority.

The FAA is issuing this rulemaking under the authority described in Subtitle VII, Part A, Subpart III, Section 44701: General requirements. Under that section, Congress charges the FAA with promoting safe flight of civil aircraft in air commerce by prescribing regulations for practices, methods, and procedures the Administrator finds necessary for safety in air commerce. This regulation is within the scope of that authority because it addresses an unsafe condition that is likely to exist or develop on products identified in this rulemaking action.

Regulatory Findings

The FAA determined that this proposed AD would not have federalism implications under Executive Order 13132. This proposed AD would not have a substantial direct effect on the States, on the relationship between the national Government and the States, or on the distribution of power and responsibilities among the various levels of government.

For the reasons discussed above, I certify this proposed regulation:

(1) Is not a ''significant regulatory action'' under Executive Order 12866,

(2) Will not affect intrastate aviation in Alaska, and

(3) Will not have a significant economic impact, positive or negative, on a substantial number of small entities under the criteria of the Regulatory Flexibility Act.

List of Subjects in 14 CFR Part 39

Air transportation, Aircraft, Aviation safety, Incorporation by reference, Safety.

The Proposed Amendment

Accordingly, under the authority delegated to me by the Administrator, the FAA proposes to amend 14 CFR part 39 as follows:

PART 39—AIRWORTHINESS DIRECTIVES

■ 1. The authority citation for part 39 continues to read as follows:

Authority: 49 U.S.C. 106(g), 40113, 44701.

§ 39.13 [Amended]

■ 2. The FAA amends § 39.13 by:

■ a. Removing Airworthiness Directive (AD) 2019–03–27, Amendment 39–19579 (84 FR 7801, March 5, 2019), and
■ b. Adding the following new AD:

Dassault Aviation: Docket No. FAA–2020–0977; Project Identifier MCAI–2020–01106–T.

(a) Comments Due Date

The FAA must receive comments by December 17, 2020.

(b) Affected AD

This AD replaces AD 2019–03–27, Amendment 39–19579 (84 FR 7801, March 5, 2019) (''AD 2019–03–27'').

(c) Applicability

This AD applies to all Dassault Aviation Model Falcon 10 airplanes, certificated in any category.

(d) Subject

Air Transport Association (ATA) of America Code 30, Ice and rain protection.

(e) Reason

This AD was prompted by a report indicating that certain wing anti-ice outboard flexible hoses were found damaged, likely resulting from the installation process, and the development of an improved wing anti-ice flexible hose. The FAA is issuing this AD to address damaged wing anti-ice outboard flexible hoses, which could lead to a loss of performance of the wing anti-ice protection system that is not annunciated to the pilot, and could result in reduced control of the airplane.

(f) Compliance

Comply with this AD within the compliance times specified, unless already done.

(g) Requirements

Except as specified in paragraph (h) of this AD: Comply with all required actions and compliance times specified in, and in accordance with, European Union Aviation Safety Agency (EASA) AD 2020–0127, dated June 4, 2020 (''EASA AD 2020–0127'').

(h) Exceptions to EASA AD 2020–0127

(1) Where EASA AD 2020–0127 refers to February 25, 2019 (the effective date of EASA AD 2019–0040–E, dated February 21, 2019), this AD requires using March 8, 2019 (the effective date of AD 2019–03–27).

(2) Where EASA AD 2020–0127 refers to its effective date, this AD requires using the effective date of this AD.

(3) The ''Remarks'' section of EASA AD 2020–0127 does not apply to this AD.

(4) Where EASA AD 2020–0127 refers to paragraph (4) of EASA AD 2017–0108 for applicable life limits, for this AD refer to FAA AD 2016–19–07, Amendment 39–18656 (81 FR 63688, September 16, 2016).

(i) No Reporting Requirement

Although the service information referenced in EASA AD 2020–0127 specifies to submit certain information to the manufacturer, this AD does not include that requirement.

(j) Other FAA AD Provisions

The following provisions also apply to this AD:

(1) *Alternative Methods of Compliance (AMOCs):* The Manager, Large Aircraft Section, International Validation Branch, FAA, has the authority to approve AMOCs for this AD, if requested using the procedures found in 14 CFR 39.19. In accordance with 14 CFR 39.19, send your request to your principal inspector or local Flight Standards District Office, as appropriate. If sending information directly to the Large Aircraft Section, International Validation Branch, send it to the attention of the person identified in paragraph (k)(2) of this AD. Information may be emailed to: *9-AVS-AIR-730-AMOC@faa.gov.*

(i) Before using any approved AMOC, notify your appropriate principal inspector, or lacking a principal inspector, the manager of the local flight standards district office/certificate holding district office.

(ii) AMOCs approved previously for AD 2019–03–27 are approved as AMOCs for the corresponding provisions of EASA AD 2020–0127 that are required by paragraph (g) of this AD.

(2) *Contacting the Manufacturer:* For any requirement in this AD to obtain instructions from a manufacturer, the instructions must be accomplished using a method approved by the Manager, Large Aircraft Section, International Validation Branch, FAA; or EASA; or Dassault Aviation's EASA Design Organization Approval (DOA). If approved by the DOA, the approval must include the DOA-authorized signature.

(k) Related Information

(1) For information about EASA AD 2020–0127, contact the EASA, Konrad-Adenauer-Ufer 3, 50668 Cologne, Germany; phone: +49 221 8999 000; email: *ADs@easa.europa.eu;* internet: *www.easa.europa.eu.* You may find this EASA AD on the EASA website at *https://ad.easa.europa.eu.* You may view this material at the FAA, Airworthiness Products Section, Operational Safety Branch, 2200 South 216th St., Des Moines, WA. For information on the availability of this material at the FAA, call 206–231–3195. This material may be found in the AD docket on the internet at *https://www.regulations.gov* by searching for and locating Docket No. FAA–2020–0977.

(2) For more information about this AD, contact Tom Rodriguez, Aerospace Engineer, Large Aircraft Section, International Validation Branch, FAA, 2200 South 216th St., Des Moines, WA 98198; phone and fax: 206–231–3226; email: *tom.rodriguez@faa.gov.*

Issued on October 26, 2020.

Lance T. Gant,

Director, Compliance & Airworthiness Division, Aircraft Certification Service.

[FR Doc. 2020–24042 Filed 10–30–20; 8:45 am]

BILLING CODE 4910–13–P

DEPARTMENT OF TRANSPORTATION

Federal Aviation Administration

14 CFR Part 39

[Docket No. FAA–2020–0972; Project Identifier MCAI–2020–01091–T]

RIN 2120–AA64

Airworthiness Directives; ATR—GIE Avions de Transport Régional Airplanes

AGENCY: Federal Aviation Administration (FAA), DOT.

ACTION: Notice of proposed rulemaking (NPRM).

SUMMARY: The FAA proposes to supersede Airworthiness Directives (AD) 2000–23–26, AD 2018–14–11, and AD 2019–13–04, which apply to ATR—GIE Avions de Transport Régional Model ATR72 airplanes. AD 2019–13–04 requires revising the existing maintenance or inspection program, as applicable, to incorporate new or more restrictive maintenance instructions and airworthiness limitations. Since the FAA issued AD 2019–13–04, the FAA has determined that new or more restrictive airworthiness limitations are necessary. This proposed AD would require revising the existing maintenance or inspection program, as applicable, to incorporate new or more restrictive airworthiness limitations, as specified in a European Union Aviation Safety Agency (EASA) AD, which will be incorporated by reference. The FAA is proposing this AD to address the unsafe condition on these products.

DATES: The FAA must receive comments on this proposed AD by December 17, 2020.

ADDRESSES: You may send comments, using the procedures found in 14 CFR 11.43 and 11.45, by any of the following methods:

- *Federal eRulemaking Portal:* Go to *https://www.regulations.gov.* Follow the instructions for submitting comments.
- *Fax:* 202–493–2251.
- *Mail:* U.S. Department of Transportation, Docket Operations, M–30, West Building Ground Floor, Room W12–140, 1200 New Jersey Avenue SE, Washington, DC 20590.
- *Hand Delivery:* Deliver to Mail address above between 9 a.m. and 5 p.m., Monday through Friday, except Federal holidays.

For the EASA material identified in this proposed AD that will be incorporated by reference (IBR), contact the EASA, Konrad-Adenauer-Ufer 3, 50668 Cologne, Germany; telephone +49 221 8999 000; email *ADs@easa.europa.eu;* internet *www.easa.europa.eu.* You may find this IBR material on the EASA website at *https://ad.easa.europa.eu.*

For the ATR service information identified in this proposed AD, contact ATR—GIE Avions de Transport Régional, 1 Allée Pierre Nadot, 31712 Blagnac Cedex, France; telephone +33 (0) 5 62 21 62 21; fax +33 (0) 5 62 21 67 18; email *continued.airworthiness@atr-aircraft.com;* internet *https://www.atr-aircraft.com.*

You may view this IBR material at the FAA, Airworthiness Products Section, Operational Safety Branch, 2200 South 216th St., Des Moines, WA. For information on the availability of this material at the FAA, call 206–231–3195. It is also available in the AD docket on the internet at *https://www.regulations.gov* by searching for and locating Docket No. FAA–2020–0972.

Examining the AD Docket

You may examine the AD docket on the internet at *https://www.regulations.gov* by searching for and locating Docket No. FAA–2020–0972; or in person at Docket Operations between 9 a.m. and 5 p.m., Monday through Friday, except Federal holidays. The AD docket contains this NPRM, any comments received, and other information. The street address for Docket Operations is listed above. Comments will be available in the AD docket shortly after receipt.

FOR FURTHER INFORMATION CONTACT: Shahram Daneshmandi, Aerospace Engineer, Large Aircraft Section, International Validation Branch, FAA, 2200 South 216th St., Des Moines, WA 98198; telephone and fax 206–231–3220; email *shahram.daneshmandi@faa.gov.*

SUPPLEMENTARY INFORMATION:

Comments Invited

The FAA invites you to send any written relevant data, views, or arguments about this proposal. Send your comments to an address listed under **ADDRESSES**. Include ''Docket No. FAA–2020–0972; Project Identifier MCAI 2020–01091–T'' at the beginning of your comments. The most helpful comments reference a specific portion of the proposal, explain the reason for any recommended change, and include supporting data. The FAA will consider all comments received by the closing date and may amend the proposal because of those comments. Except for Confidential Business Information (CBI) as described in the following paragraph, and other information as described in 14 CFR 11.35, the FAA will post all comments we receive, without change, to *https://www.regulations.gov,* including any personal information you provide. The agency will also post a report summarizing each substantive verbal contact we receive about this proposed AD.

Confidential Business Information

CBI is commercial or financial information that is both customarily and actually treated as private by its owner. Under the Freedom of Information Act (FOIA) (5 U.S.C. 552), CBI is exempt from public disclosure. If your comments responsive to this NPRM contain commercial or financial information that is customarily treated as private, that you actually treat as private, and that is relevant or responsive to this NPRM, it is important that you clearly designate the submitted comments as CBI. Please mark each page of your submission containing CBI as ''PROPIN.'' The FAA will treat such marked submissions as confidential under the FOIA, and they will not be placed in the public docket of this NPRM. Submissions containing CBI should be sent to Shahram Daneshmandi, Aerospace Engineer, Large Aircraft Section, International Validation Branch, FAA, 2200 South 216th St., Des Moines, WA 98198. Any commentary that the FAA receives which is not specifically designated as CBI will be placed in the public docket for this rulemaking.

Discussion

The FAA issued AD 2019–13–04, Amendment 39–19677 (84 FR 35028, July 22, 2019) (''AD 2019–13–04''), for certain ATR—GIE Avions de Transport Régional Model ATR72 airplanes. AD 2019–13–04 requires revising the existing maintenance or inspection program, as applicable, to incorporate new or more restrictive maintenance instructions and airworthiness limitations. The FAA issued AD 2019–13–04 to address fatigue cracking and damage in principal structural elements, which could result in reduced structural integrity of the airplane. AD 2019–13–04 specifies that accomplishing the revision required by paragraph (g) of that AD terminates all requirements of AD 2000–23–26, Amendment 39–11999 (65 FR 70775, November 28, 2000) (''AD 2000–23–26''), AD 2008–04–19 R1, Amendment 39–16069 (74 FR 56713, November 3, 2009) (''AD 2008–04–19 R1''), and AD 2018–14–11 Amendment 39–19331 (83 FR 34031, July 19, 2018) (''AD 2018–14–11'');. AD 2008–04–19 R1 was superseded by AD 2020–09–16, Amendment 39–19912 (85 FR 29596, May 18, 2020). This proposed AD would therefore supersede AD 2000–23–26, AD 2018–14–11, and AD 2019–13–04.

Actions Since AD 2019–13–04 Was Issued

Since the FAA issued AD 2019–13–04, the FAA has determined that new or more restrictive airworthiness limitations are necessary.

The EASA, which is the Technical Agent for the Member States of the European Union, has issued EASA AD 2020–0173, dated August 5, 2020 (''EASA AD 2020–0173'') (also referred to as the Mandatory Continuing Airworthiness Information, or ''the MCAI''), to correct an unsafe condition for all ATR—GIE Avions de Transport Régional Model ATR72 airplanes.

Airplanes with an original airworthiness certificate or original export certificate of airworthiness issued after December 12, 2019 must comply with the airworthiness limitations specified as part of the approved type design and referenced on the type certificate data sheet; this AD therefore does not include those airplanes in the applicability.

This proposed AD was prompted by a determination that new or more restrictive airworthiness limitations are necessary. The FAA is proposing this AD to address fatigue cracking and damage in principal structural elements, which could result in reduced structural integrity of the airplane. See the MCAI for additional background information.

Related IBR Material Under 1 CFR Part 51

EASA AD 2020–0173 describes new or more restrictive airworthiness limitations for airplane structures and safe life limits.

This AD would also require ATR ATR72 Time Limits Document, Revision 16, dated January 30, 2018, which the Director of the Federal Register approved for incorporation by reference as of August 26, 2019 (84 FR 35028, July 22, 2019).

This material is reasonably available because the interested parties have access to it through their normal course of business or by the means identified in the **ADDRESSES** section.

FAA's Determination and Requirements of This Proposed AD

This product has been approved by the aviation authority of another

country, and is approved for operation in the United States. Pursuant to the FAA's bilateral agreement with the State of Design Authority, the FAA has been notified of the unsafe condition described in the MCAI and service information referenced above. The FAA is proposing this AD because the FAA has evaluated all pertinent information and determined an unsafe condition exists and is likely to exist or develop on other products of the same type design.

Proposed AD Requirements

This proposed AD would retain the requirements of AD 2019–13–04. This proposed AD would also require revising the existing maintenance or inspection program, as applicable, to incorporate new or more restrictive airworthiness limitations, which are specified in EASA AD 2020–0173 described previously, as incorporated by reference. Any differences with EASA AD 2020–0173 are identified as exceptions in the regulatory text of this AD.

This proposed AD would require revisions to certain operator maintenance documents to include new actions (*e.g.,* inspections). Compliance with these actions is required by 14 CFR 91.403(c). For airplanes that have been previously modified, altered, or repaired in the areas addressed by this proposed AD, the operator may not be able to accomplish the actions described in the revisions. In this situation, to comply with 14 CFR 91.403(c), the operator must request approval for an alternative method of compliance according to paragraph (n)(1) of this proposed AD.

Explanation of Required Compliance Information

In the FAA's ongoing efforts to improve the efficiency of the AD process, the FAA initially worked with Airbus and EASA to develop a process to use certain EASA ADs as the primary source of information for compliance with requirements for corresponding FAA ADs. The FAA has since coordinated with other manufacturers and civil aviation authorities (CAAs) to use this process. As a result, EASA AD 2020–0173 will be incorporated by reference in the FAA final rule. This proposed AD would, therefore, require compliance with EASA AD 2020–0173 in its entirety, through that incorporation, except for any differences identified as exceptions in the regulatory text of this proposed AD. Using common terms that are the same as the heading of a particular section in the EASA AD does not mean that operators need comply only with that section. For example, where the AD requirement refers to ''all required actions and compliance times,'' compliance with this AD requirement is not limited to the section titled ''Required Action(s) and Compliance Time(s)'' in the EASA AD.

Service information specified in EASA AD 2020–0173 that is required for compliance with EASA AD 2020–0173 will be available on the internet at *https://www.regulations.gov* by searching for and locating Docket No. FAA–2020–0972 after the FAA final rule is published.

Airworthiness Limitation ADs Using the New Process

The FAA's process of incorporating by reference MCAI ADs as the primary source of information for compliance with corresponding FAA ADs has been limited to certain MCAI ADs (primarily those with service bulletins as the primary source of information for accomplishing the actions required by the FAA AD). However, the FAA is now expanding the process to include MCAI ADs that require a change to airworthiness limitation documents, such as airworthiness limitation sections.

For these ADs that incorporate by reference an MCAI AD that changes airworthiness limitations, the FAA requirements are unchanged. Operators must revise the existing maintenance or inspection program, as applicable, to incorporate the information specified in the new airworthiness limitation document. The airworthiness limitations must be followed according to 14 CFR 91.403(c) and 91.409(e).

The previous format of the airworthiness limitation ADs included a paragraph that specified that no alternative actions (*e.g.,* inspections) or intervals may be used unless the actions or intervals are approved as an alternative method of compliance (AMOC) in accordance with the procedures specified in the AMOCs paragraph under ''Other FAA Provisions.'' This new format includes a ''New Provisions for Alternative Actions, and Intervals'' paragraph that does not specifically refer to AMOCs, but operators may still request an AMOC to use an alternative action or interval.

Costs of Compliance

The FAA estimates that this proposed AD affects 23 airplanes of U.S. registry. The FAA estimates the following costs to comply with this proposed AD:

The FAA estimates the total cost per operator for the retained actions from AD 2019–13–04 to be $7,650 (90 work-hours × $85 per work-hour).

The FAA has determined that revising the existing maintenance or inspection program takes an average of 90 work-hours per operator, although the agency recognizes that this number may vary from operator to operator. In the past, the agency has estimated that this action takes 1 work-hour per airplane. Since operators incorporate maintenance or inspection program changes for their affected fleet(s), the FAA has determined that a per-operator estimate is more accurate than a per-airplane estimate.

The FAA estimates the total cost per operator for the new proposed actions to be $7,650 (90 work-hours × $85 per work-hour).

Authority for This Rulemaking

Title 49 of the United States Code specifies the FAA's authority to issue rules on aviation safety. Subtitle I, section 106, describes the authority of the FAA Administrator. Subtitle VII: Aviation Programs, describes in more detail the scope of the Agency's authority.

The FAA is issuing this rulemaking under the authority described in Subtitle VII, Part A, Subpart III, Section 44701: General requirements. Under that section, Congress charges the FAA with promoting safe flight of civil aircraft in air commerce by prescribing regulations for practices, methods, and procedures the Administrator finds necessary for safety in air commerce. This regulation is within the scope of that authority because it addresses an unsafe condition that is likely to exist or develop on products identified in this rulemaking action.

Regulatory Findings

The FAA determined that this proposed AD would not have federalism implications under Executive Order 13132. This proposed AD would not have a substantial direct effect on the States, on the relationship between the national Government and the States, or on the distribution of power and responsibilities among the various levels of government.

For the reasons discussed above, I certify this proposed regulation:

(1) Is not a ''significant regulatory action'' under Executive Order 12866,

(2) Will not affect intrastate aviation in Alaska, and

(3) Will not have a significant economic impact, positive or negative, on a substantial number of small entities under the criteria of the Regulatory Flexibility Act.

List of Subjects in 14 CFR Part 39

Air transportation, Aircraft, Aviation safety, Incorporation by reference, Safety.

The Proposed Amendment

Accordingly, under the authority delegated to me by the Administrator, the FAA proposes to amend 14 CFR part 39 as follows:

PART 39—AIRWORTHINESS DIRECTIVES

■ 1. The authority citation for part 39 continues to read as follows:

Authority: 49 U.S.C. 106(g), 40113, 44701.

§ 39.13 [Amended]

■ 2. The FAA amends § 39.13 by:

■ a. Removing Airworthiness Directive (AD) 2000–23–26, Amendment 39–11999 (65 FR 70775, November 28, 2000); AD 2018–14–11, Amendment 39–19331 (83 FR 34031, July 19, 2018); and AD 2019–13–04, Amendment 39–19677 (84 FR 35028, July 22, 2019), and

■ b. Adding the following new AD:

ATR—GIE Avions de Transport Régional: Docket No. FAA–2020–0972; Project Identifier MCAI–2020–01091–T.

(a) Comments Due Date

The FAA must receive comments by December 17, 2020.

(b) Affected ADs

(1) This AD replaces AD 2000–23–26, Amendment 39–11999 (65 FR 70775, November 28, 2000) (''AD 2000–23–26'').

(2) This AD replaces AD 2018–14–11, Amendment 39–19331 (83 FR 34031, July 19, 2018) (''AD 2018–14–11'').

(3) This AD replaces AD 2019–13–04, Amendment 39–19677 (84 FR 35028, July 22, 2019) (''AD 2019–13–04'').

(c) Applicability

This AD applies to ATR—GIE Avions de Transport Régional Model ATR72 airplanes, certificated in any category, with an original airworthiness certificate or original export certificate of airworthiness issued on or before December 12, 2019.

(d) Subject

Air Transport Association (ATA) of America Code 05, Time Limits/Maintenance Checks.

(e) Reason

This AD was prompted by a determination that new or more restrictive airworthiness limitations are necessary. The FAA is issuing this AD to address fatigue cracking and damage in principal structural elements, which could result in reduced structural integrity of the airplane.

(f) Compliance

Comply with this AD within the compliance times specified, unless already done.

(g) Retained Maintenance or Inspection Program Revision, With No Changes

This paragraph restates the requirements of paragraph (g) of AD 2019–13–04, with no changes. For airplanes with an original airworthiness certificate or original export certificate of airworthiness issued on or before January 30, 2018: Within 90 days after August 26, 2019 (the effective date of AD 2019–13–04), revise the existing maintenance or inspection program, as applicable, to incorporate the information specified in ATR ATR72 Time Limits Document, Revision 16, dated January 30, 2018. The initial compliance time for doing the tasks is at the time specified in ATR ATR72 Time Limits Document, Revision 16, dated January 30, 2018, or within 90 days after August 26, 2019, whichever occurs later, except as provided by paragraphs (h) and (i) of this AD.

(h) Retained Initial Compliance Times for Certain Tasks, With No Changes

This paragraph restates the requirements of paragraph (h) of AD 2019–13–04, with no changes. For airplanes with an original airworthiness certificate or original export certificate of airworthiness issued on or before January 30, 2018: For accomplishing airworthiness limitations (AWL) and certification maintenance requirement (CMR)/maintenance significant item (MSI) tasks identified in figure 1 to paragraph (h) of this AD, the initial compliance time is at the applicable time specified in the airworthiness limitations section (ALS) of the ATR ATR72 Time Limits Document, Revision 16, dated January 30, 2018, or at the applicable compliance time in figure 1 to paragraph (h) of this AD, whichever occurs later.

Figure 1 to paragraph (h) – *Grace period for CMR/MSI tasks*

CMR/MSI Tasks	Compliance Time
213100-1 213100-2 213100-3	Within 550 flight hours or 3 months after August 23, 2018 (the effective date of AD 2018-14-11), whichever occurs first

(i) Retained Initial Compliance Time: One-Time Initial Threshold, With No Changes

This paragraph restates the requirements of paragraph (i) of AD 2019–13–04, with no changes. For airplanes with an original airworthiness certificate or original export certificate of airworthiness issued on or before January 30, 2018: For CMR task 220000–5, a one-time initial threshold, as specified in ATR ATR72 Time Limits Document, Revision 16, dated January 30, 2018, is allowed as specified in figure 2 to paragraph (i) of this AD.

Figure 2 to paragraph (i) – *Initial threshold for CMR task*

Configuration	Compliance Time
ATR modification 7585 embodied in production	Within 7,000 flight hours since first flight of the airplane
ATR Service Bulletin ATR72-34-1154 embodied in service	Within 7,000 flight hours after embodiment of ATR Service Bulletin ATR72-34-1154

(j) Retained Restrictions on Alternative Actions and Intervals With a New Exception

This paragraph restates the requirements of paragraph (j) of AD 2019–13–04, with a new exception. Except as required by paragraph (k) of this AD, after the existing maintenance or inspection program has been revised as required by paragraph (g) of this AD, no alternative actions (*e.g.,* inspections) and intervals may be used unless the actions and intervals are approved as an alternative method of compliance (AMOC) in accordance with the procedures specified in paragraph (n)(1) of this AD.

(k) New Maintenance or Inspection Program Revision

Except as specified in paragraph (l) of this AD: Comply with all required actions and compliance times specified in, and in accordance with, European Union Aviation Safety Agency (EASA) AD 2020–0173, dated August 5, 2020 (''EASA AD 2020–0173''). Accomplishing the maintenance or inspection program revision required by this paragraph terminates the requirements of paragraph (g) of this AD.

(l) Exceptions to EASA AD 2020–0173

(1) Where EASA AD 2020–0173 refers to its effective date, this AD requires using the effective date of this AD.

(2) The requirements specified in paragraphs (1) and (3) of EASA AD 2020–0173 do not apply to this AD.

(3) Paragraph (4) of EASA AD 2020–0173 specifies revising ''the approved AMP'' within 12 months after its effective date, but this AD requires revising the existing maintenance or inspection program, as applicable, to incorporate the ''limitations, tasks and associated thresholds and intervals'' specified in paragraph (4) of EASA AD 2020–0173 within 90 days after the effective date of this AD.

(4) Except as provided by paragraph (2) of EASA AD 2020–0173, the initial compliance time for doing the tasks specified in paragraph (4) of EASA AD 2020–0173 is at the applicable ''associated thresholds'' specified in paragraph (4) of EASA AD 2020–0173, or within 90 days after the effective date of this AD, whichever occurs later.

(5) Where table 1 of EASA AD 2020–0173 specifies a compliance time of ''without exceeding the previous threshold and interval as specified in TLD Revision 16'' for this AD use ''without exceeding the compliance times specified in paragraph (g) of this AD.''

(6) The provisions specified in paragraphs (5) and (6) of EASA AD 2020–0173 do not apply to this AD.

(7) The ''Remarks'' section of EASA AD 2020–0173 does not apply to this AD.

(m) New Provisions for Alternative Actions and Intervals

After the maintenance or inspection program has been revised as required by paragraph (k) of this AD, no alternative actions (*e.g.,* inspections) or intervals, are allowed unless they are approved as specified in the provisions of the ''Ref. Publications'' section of EASA AD 2020–0173.

(n) Other FAA AD Provisions

The following provisions also apply to this AD:

(1) *Alternative Methods of Compliance (AMOCs):* The Manager, Large Aircraft Section, International Validation Branch, FAA, has the authority to approve AMOCs for this AD, if requested using the procedures found in 14 CFR 39.19. In accordance with 14 CFR 39.19, send your request to your principal inspector or local Flight Standards District Office, as appropriate. If sending information directly to the Large Aircraft Section, International Validation Branch, send it to the attention of the person identified in paragraph (o)(4) of this AD. Information may be emailed to: *9-AVS-AIR-730-AMOC@faa.gov.* Before using any approved AMOC, notify your appropriate principal inspector, or lacking a principal inspector, the manager of the local flight standards district office/certificate holding district office.

(2) *Contacting the Manufacturer:* For any requirement in this AD to obtain instructions from a manufacturer, the instructions must be accomplished using a method approved by the Manager, Large Aircraft Section, International Validation Branch, FAA; or EASA; or ATR—GIE Avions de Transport Régional's EASA Design Organization Approval (DOA). If approved by the DOA, the approval must include the DOA-authorized signature.

(o) Related Information

(1) For EASA AD 2020–0173, contact the EASA, Konrad-Adenauer-Ufer 3, 50668 Cologne, Germany; telephone +49 221 8999 000; email *ADs@easa.europa.eu;* internet *www.easa.europa.eu.* You may find this EASA AD on the EASA website at *https://ad.easa.europa.eu.*

(2) For the ATR service information identified in this AD contact ATR—GIE Avions de Transport Régional, 1 Allée Pierre Nadot, 31712 Blagnac Cedex, France; telephone +33 (0) 5 62 21 62 21; fax +33 (0) 5 62 21 67 18; email *continued.airworthiness@atr-aircraft.com;* internet *https://www.atr-aircraft.com.*

(3) You may view this material at the FAA, Airworthiness Products Section, Operational Safety Branch, 2200 South 216th St., Des Moines, WA. For information on the availability of this material at the FAA, call 206–231–3195. This material may be found in the AD docket on the internet at *https://www.regulations.gov* by searching for and locating Docket No. FAA–2020–0972.

(4) For more information about this AD, contact Shahram Daneshmandi, Aerospace Engineer, Large Aircraft Section, International Validation Branch, FAA, 2200 South 216th St., Des Moines, WA 98198; telephone and fax 206–231–3220; email *shahram.daneshmandi@faa.gov.*

Issued on October 23, 2020.

Lance T. Gant,

Director, Compliance & Airworthiness Division, Aircraft Certification Service.

[FR Doc. 2020–23933 Filed 10–30–20; 8:45 am]

BILLING CODE 4910–13–P

DEPARTMENT OF TRANSPORTATION

Federal Aviation Administration

14 CFR Part 39

[Docket No. FAA–2020–0975; Product Identifier 2020–NM–061–AD]

RIN 2120–AA64

Airworthiness Directives; De Havilland Aircraft of Canada Limited (Type Certificate Previously Held by Bombardier, Inc.) Airplanes

AGENCY: Federal Aviation Administration (FAA), DOT.

ACTION: Notice of proposed rulemaking (NPRM).

SUMMARY: The FAA proposes to adopt a new airworthiness directive (AD) for certain De Havilland Aircraft of Canada Limited Model DHC–8–400, –401, and –402 airplanes. This proposed AD was

prompted by a report of main landing gear (MLG) retractions after striking an obstacle or severe wheel imbalance after a tire failure. This proposed AD would require inspections for correct height of the lock link over-center stop pin and for correct gaps of the left-hand and right-hand MLG downlock proximity sensors, replacement of the shim if necessary, and corrective actions, and installation of a new improved proximity sensor electronic unit (PSEU) with software changes. The FAA is proposing this AD to address the unsafe condition on these products.

DATES: The FAA must receive comments on this proposed AD by December 17, 2020.

ADDRESSES: You may send comments, using the procedures found in 14 CFR 11.43 and 11.45, by any of the following methods:

- *Federal eRulemaking Portal:* Go to *https://www.regulations.gov.* Follow the instructions for submitting comments.
- *Fax:* 202–493–2251.
- *Mail:* U.S. Department of Transportation, Docket Operations, M–30, West Building Ground Floor, Room W12–140, 1200 New Jersey Avenue SE, Washington, DC 20590.
- *Hand Delivery:* Deliver to Mail address above between 9 a.m. and 5 p.m., Monday through Friday, except Federal holidays.

For service information identified in this NPRM, contact De Havilland Aircraft of Canada Limited, Q-Series Technical Help Desk, 123 Garratt Boulevard, Toronto, Ontario M3K 1Y5, Canada; telephone 416–375–4000; fax 416–375–4539; email *thd@dehavilland.com*; internet *https://dehavilland.com.* You may view this service information at the FAA, Airworthiness Products Section, Operational Safety Branch, 2200 South 216th St., Des Moines, WA. For information on the availability of this material at the FAA, call 206–231–3195.

Examining the AD Docket

You may examine the AD docket on the internet at *https://www.regulations.gov* by searching for and locating Docket No. FAA–2020–0975; or in person at Docket Operations between 9 a.m. and 5 p.m., Monday through Friday, except Federal holidays. The AD docket contains this NPRM, any comments received, and other information. The street address for Docket Operations is listed above. Comments will be available in the AD docket shortly after receipt.

FOR FURTHER INFORMATION CONTACT: Darren Gassetto, Aerospace Engineer, Mechanical Systems and Administrative Services Section, FAA, New York ACO Branch, 1600 Stewart Avenue, Suite 410, Westbury, NY 11590; telephone 516–228–7323; fax 516–794–5531; email *9-avs-nyaco-cos@faa.gov.*

SUPPLEMENTARY INFORMATION:

Comments Invited

The FAA invites you to send any written relevant data, views, or arguments about this proposal. Send your comments to an address listed under the **ADDRESSES** section. Include ''Docket No. FAA–2020–0975; Product Identifier 2020–NM–061–AD'' at the beginning of your comments. The most helpful comments reference a specific portion of the proposal, explain the reason for any recommended change, and include supporting data. The FAA will consider all comments received by the closing date and may amend the proposal because of those comments.

Except for Confidential Business Information (CBI) as described in the following paragraph, and other information as described in 14 CFR 11.35, the FAA will post all comments received, without change, to *https://www.regulations.gov,* including any personal information you provide. The agency will also post a report summarizing each substantive verbal contact received about this proposed AD.

Confidential Business Information

CBI is commercial or financial information that is both customarily and actually treated as private by its owner. Under the Freedom of Information Act (FOIA) (5 U.S.C. 552), CBI is exempt from public disclosure. If your comments responsive to this NPRM contain commercial or financial information that is customarily treated as private, that you actually treat as private, and that is relevant or responsive to this NPRM, it is important that you clearly designate the submitted comments as CBI. Please mark each page of your submission containing CBI as ''PROPIN.'' The FAA will treat such marked submissions as confidential under the FOIA, and they will not be placed in the public docket of this NPRM. Submissions containing CBI should be sent to Darren Gassetto, Aerospace Engineer, Mechanical Systems and Administrative Services Section, FAA, New York ACO Branch, 1600 Stewart Avenue, Suite 410, Westbury, NY 11590; telephone 516–228–7323; fax 516–794–5531; email *9-avs-nyaco-cos@faa.gov.* Any commentary that the FAA receives which is not specifically designated as CBI will be placed in the public docket for this rulemaking.

Discussion

Transport Canada Civil Aviation (TCCA), which is the aviation authority for Canada, has issued Canadian AD CF–2016–31R1, dated March 24, 2017 (referred to after this as the Mandatory Continuing Airworthiness Information, or ''the MCAI''), to correct an unsafe condition for certain De Havilland Aircraft of Canada Limited Model DHC–8–400, –401, and –402 airplanes. You may examine the MCAI in the AD docket on the internet at *https://www.regulations.gov* by searching for and locating Docket No. FAA–2020–0975.

This proposed AD was prompted by a report of MLG retractions after striking an obstacle or severe wheel imbalance after a tire failure. The FAA is proposing this AD to address loss of MLG downlock signal caused by the vibrations from those events, which leads to de-energizing the MLG solenoid sequence valve (SSV) and subsequent removal of hydraulic pressure from the MLG downlock actuator. Loss of the hydraulic pressure in the downlock actuator, combined with the vibrations, can cause the stabilizer brace to unlock and the MLG to subsequently retract. See the MCAI for additional background information.

Related Service Information Under 1 CFR Part 51

De Havilland Aircraft of Canada Limited has issued Bombardier Service Bulletin 84–32–140, Revision B, dated January 30, 2018. This service information describes set-up procedures for proper configuration of the MLG prior to performing subsequent procedures for inspections for correct height of the lock link over-center stop pin and for correct gaps of the left-hand and right-hand MLG downlock proximity sensors, and replacement of the shim.

De Havilland Aircraft of Canada Limited has also issued Bombardier Service Bulletin 84–32–143, Revision B, dated November 16, 2016, which describes procedures for installation of a new, improved PSEU, PSEU 30145–0601, with software changes.

De Havilland Aircraft of Canada Limited has also issued Bombardier Service Bulletin 84–32–149, dated November 16, 2016, which describes procedures for installation of a new, improved PSEU, PSEU 30145–0602, with software changes.

These documents are distinct since they apply to different airplane configurations. This service information is reasonably available because the interested parties have access to it

through their normal course of business or by the means identified in the **ADDRESSES** section.

FAA's Determination

This product has been approved by the aviation authority of another country, and is approved for operation in the United States. Pursuant to the FAA's bilateral agreement with the State of Design Authority, the FAA has been notified of the unsafe condition described in the MCAI and service information referenced above. The FAA is proposing this AD because the FAA evaluated all the relevant information and determined the unsafe condition described previously is likely to exist or develop on other products of the same type design.

Proposed Requirements of This NPRM

This proposed AD would require accomplishing the actions specified in the service information described previously.

Costs of Compliance

The FAA estimates that this proposed AD affects 57 airplanes of U.S. registry. The FAA estimates the following costs to comply with this proposed AD:

ESTIMATED COSTS FOR REQUIRED ACTIONS

Labor cost	Parts cost	Cost per product	Cost on U.S. operators
Up to 12 work-hours × $85 per hour = Up to $1,020	Up to $4,750	Up to $5,770	Up to $328,890.

The FAA estimates the following costs to do any necessary on-condition actions that would be required based on the results of any required actions. The FAA has no way of determining the number of aircraft that might need these on-condition actions:

ESTIMATED COSTS OF ON-CONDITION ACTIONS

Labor cost	Parts cost	Cost per product
1 work-hour × $85 per hour = $85	$374	$459

Authority for This Rulemaking

Title 49 of the United States Code specifies the FAA's authority to issue rules on aviation safety. Subtitle I, section 106, describes the authority of the FAA Administrator. Subtitle VII: Aviation Programs, describes in more detail the scope of the Agency's authority.

The FAA is issuing this rulemaking under the authority described in Subtitle VII, Part A, Subpart III, Section 44701: General requirements. Under that section, Congress charges the FAA with promoting safe flight of civil aircraft in air commerce by prescribing regulations for practices, methods, and procedures the Administrator finds necessary for safety in air commerce. This regulation is within the scope of that authority because it addresses an unsafe condition that is likely to exist or develop on products identified in this rulemaking action.

Regulatory Findings

The FAA determined that this proposed AD would not have federalism implications under Executive Order 13132. This proposed AD would not have a substantial direct effect on the States, on the relationship between the national Government and the States, or on the distribution of power and responsibilities among the various levels of government.

For the reasons discussed above, I certify this proposed regulation:

(1) Is not a ''significant regulatory action'' under Executive Order 12866,

(2) Will not affect intrastate aviation in Alaska, and

(3) Will not have a significant economic impact, positive or negative, on a substantial number of small entities under the criteria of the Regulatory Flexibility Act.

List of Subjects in 14 CFR Part 39

Air transportation, Aircraft, Aviation safety, Incorporation by reference, Safety.

The Proposed Amendment

Accordingly, under the authority delegated to me by the Administrator, the FAA proposes to amend 14 CFR part 39 as follows:

PART 39—AIRWORTHINESS DIRECTIVES

■ 1. The authority citation for part 39 continues to read as follows:

Authority: 49 U.S.C. 106(g), 40113, 44701.

§ 39.13 [Amended]

■ 2. The FAA amends § 39.13 by adding the following new airworthiness directive (AD):

De Havilland Aircraft of Canada Limited (Type Certificate Previously Held by Bombardier, Inc.): Docket No. FAA–2020–0975; Product Identifier 2020–NM–061–AD.

(a) Comments Due Date

The FAA must receive comments by December 17, 2020.

(b) Affected ADs

None.

(c) Applicability

This AD applies to De Havilland Aircraft of Canada Limited (type certificate previously held by Bombardier, Inc.) Model DHC–8–400, –401, and –402 airplanes, certificated in any category, having serial number 4001, and 4003 through 4534 inclusive.

(d) Subject

Air Transport Association (ATA) of America Code 32, Landing Gear.

(e) Reason

This AD was prompted by a report of main landing gear (MLG) retractions after striking an obstacle or severe wheel imbalance after a tire failure. The FAA is issuing this AD to address loss of MLG downlock signal caused by the vibrations from those events, which leads to de-energizing the MLG solenoid sequence valve and subsequent removal of hydraulic pressure from the MLG downlock actuator. Loss of the hydraulic pressure in the downlock actuator, combined with the vibrations, can cause the stabilizer brace to unlock and the MLG to subsequently retract.

(f) Compliance

Comply with this AD within the compliance times specified, unless already done.

(g) Downlock Sensor Rigging and Reduced Lock Link Over-Center

Within 9 months after the effective date of this AD: Verify both the height of the lock link over-center stop pin and the gap of the left-hand and right-hand MLG downlock proximity sensors, and perform corrective actions as required, in accordance with paragraphs 3.A. and 3.B. of the Accomplishment Instructions of Bombardier Service Bulletin 84–32–140, Revision B, dated January 30, 2018. Do all applicable corrective actions before further flight.

(h) Installation of Proximity Sensor Electronic Unit (PSEU) 30145–0601

Within 18 months after the effective date of this AD, install PSEU 30145–0601 in accordance with paragraphs 3.A. and 3.B. of the Accomplishment Instructions of Bombardier Service Bulletin 84–32–143, Revision B, dated November 16, 2016.

(i) Installation of PSEU 30145–0602

Installing PSEU 30145–0602 in accordance with paragraphs 3.A. and 3.B. of the Accomplishment Instructions of Bombardier Service Bulletin 84–32–149, dated November 16, 2016, also accomplishes the requirements of paragraphs (g) and (h) of this AD.

(j) Credit for Previous Actions

(1) This paragraph provides credit for actions required by paragraph (g) of this AD, if those actions were performed before the effective date of this AD using the service information as specified in paragraphs (j)(1)(i) and (ii) of this AD.

(i) Bombardier Service Bulletin 84–32–140, dated August 5, 2016.

(ii) Bombardier Service Bulletin 84–32–140, Revision A, dated June 12, 2017.

(2) This paragraph provides credit for actions required by paragraphs (g) and (h) of this AD, if PSEU 30145–0601 was installed before the effective date of this AD using the service information as specified in paragraphs (j)(2)(i) and (ii) of this AD.

(i) Bombardier Service Bulletin 84–32–143, dated June 30, 2016.

(ii) Bombardier Service Bulletin 84–32–143, Revision A, dated August 5, 2016.

(k) Other FAA AD Provisions

The following provisions also apply to this AD:

(1) *Alternative Methods of Compliance (AMOCs):* The Manager, New York ACO Branch, FAA, has the authority to approve AMOCs for this AD, if requested using the procedures found in 14 CFR 39.19. In accordance with 14 CFR 39.19, send your request to your principal inspector or local Flight Standards District Office, as appropriate. If sending information directly to the manager of the certification office, send it to ATTN: Program Manager, Continuing Operational Safety, FAA, New York ACO Branch, 1600 Stewart Avenue, Suite 410, Westbury, NY 11590; telephone 516–228–7300; fax 516–794–5531. Before using any approved AMOC, notify your appropriate principal inspector, or lacking a principal inspector, the manager of the local flight standards district office/certificate holding district office.

(2) *Contacting the Manufacturer:* For any requirement in this AD to obtain instructions from a manufacturer, the instructions must be accomplished using a method approved by the Manager, New York ACO Branch, FAA; or Transport Canada Civil Aviation (TCCA); or De Havilland Aircraft of Canada Limited's TCCA Design Approval Organization (DAO). If approved by the DAO, the approval must include the DAO-authorized signature.

(l) Related Information

(1) Refer to Mandatory Continuing Airworthiness Information (MCAI) Canadian AD CF–2016–31R1, dated March 24, 2017, for related information. This MCAI may be found in the AD docket on the internet at *https://www.regulations.gov* by searching for and locating Docket No. FAA–2020–0975.

(2) For more information about this AD, contact Darren Gassetto, Aerospace Engineer, Mechanical Systems and Administrative Services Section, FAA, New York ACO Branch, 1600 Stewart Avenue, Suite 410, Westbury, NY 11590; telephone 516–228–7323; fax 516–794–5531; email *9-avs-nyaco-cos@faa.gov*.

(3) For information about AMOCs, contact ATTN: Program Manager, Continuing Operational Safety, FAA, New York ACO Branch, 1600 Stewart Avenue, Suite 410, Westbury, NY 11590; telephone 516–228–7300; fax 516–794–5531.

(4) For service information identified in this AD, contact De Havilland Aircraft of Canada Limited, Q-Series Technical Help Desk, 123 Garratt Boulevard, Toronto, Ontario M3K 1Y5, Canada; telephone 416–375–4000; fax 416–375–4539; email *thd@dehavilland.com*; internet *https://dehavilland.com*. You may view this service information at the FAA, Airworthiness Products Section, Operational Safety Branch, 2200 South 216th St., Des Moines, WA. For information on the availability of this material at the FAA, call 206–231–3195.

Issued on October 26, 2020.

Lance T. Gant,

Director, Compliance & Airworthiness Division, Aircraft Certification Service.

[FR Doc. 2020–24040 Filed 10–30–20; 8:45 am]

BILLING CODE 4910–13–P

DEPARTMENT OF TRANSPORTATION

Federal Aviation Administration

14 CFR Part 71

[Docket No. FAA–2020–0924; Airspace Docket No. 20–ANE–1]

RIN 2120–AA66

Proposed Revocation of Class E Airspace; Newburyport, MA

AGENCY: Federal Aviation Administration (FAA), DOT.

ACTION: Notice of proposed rulemaking (NPRM).

SUMMARY: This action proposes to remove Class E airspace at Newburyport, MA, as Plum Island Airport no longer has instrument approaches, and controlled airspace is no longer required. This action would enhance the safety and management of controlled airspace within the national airspace system.

DATES: Comments must be received on or before December 17, 2020.

ADDRESSES: Send comments on this rule to: U.S. Department of Transportation, Docket Operations, 1200 New Jersey Avenue SE, West Building Ground Floor, Room W12–140, Washington, DC 20590–0001; Telephone: (800) 647–5527, or (202) 366–9826. You must identify the Docket No. FAA–2020–0924; Airspace Docket No. 20–ANE–1, at the beginning of your comments. You may also submit comments through the internet at *https://www.regulations.gov.*

FAA Order 7400.11E, Airspace Designations and Reporting Points, and subsequent amendments can be viewed online at *https://www.faa.gov/air_traffic/publications/.* For further information, you can contact the Airspace Policy Group, Federal Aviation Administration, 800 Independence Avenue SW, Washington, DC, 20591; Telephone: 202–267–8783. The Order is also available for inspection at the National Archives and Records Administration (NARA). For information on the availability of FAA Order 7400.11E at NARA, email *fedreg.legal@nara.gov* or go to *https://www.archives.gov/federal-register/cfr/ibr-locations.html.*

FOR FURTHER INFORMATION CONTACT: John Fornito, Operations Support Group, Eastern Service Center, Federal Aviation Administration, 1701 Columbia Ave., College Park, GA 30337; telephone (404) 305–6364.

SUPPLEMENTARY INFORMATION:

Authority for This Rulemaking

The FAA's authority to issue rules regarding aviation safety is found in Title 49 of the United States Code. Subtitle I, Section 106 describes the authority of the FAA Administrator. Subtitle VII, Aviation Programs, describes in more detail the scope of the agency's authority. This proposed rulemaking is promulgated under the authority described in Subtitle VII, part A, Subpart I, Section 40103. Under that section, the FAA is charged with prescribing regulations to assign the use of airspace necessary to ensure the safety of aircraft and the efficient use of airspace. This regulation is within the scope of that authority as it would remove Class E airspace extending upward from 700 feet above the surface at Plum Island Airport, Newburyport,

MA, due to the cancellation of all instrument flight rules approaches into the airport.

Comments Invited

Interested persons are invited to comment on this proposed rule by submitting such written data, views, or arguments, as they may desire. Comments that provide the factual basis supporting the views and suggestions presented are particularly helpful in developing reasoned regulatory decisions on the proposal. Comments are specifically invited on the overall regulatory, aeronautical, economic, environmental, and energy-related aspects of the proposal.

Communications should identify both docket numbers (Docket No. FAA–2020–0924 and Airspace Docket No. 20–ANE–1) and be submitted in triplicate to the DOT Docket Operations (see **ADDRESSES** section for address and phone number). You may also submit comments through the internet at *http://www.regulations.gov.*

Persons wishing the FAA to acknowledge receipt of their comments on this action must submit with those comments a self-addressed stamped postcard on which the following statement is made: ''Comments to FAA Docket No. FAA–2020–0924; Airspace Docket No. 20–ANE–1.'' The postcard will be date/time stamped and returned to the commenter.

All communications received before the specified closing date for comments will be considered before taking action on the proposed rule. The proposal contained in this notice may be changed in light of the comments received. All comments submitted will be available for examination in the public docket both before and after the comment closing date. A report summarizing each substantive public contact with FAA personnel concerned with this rulemaking will be filed in the docket.

Availability of NPRMs

An electronic copy of this document may be downloaded from and comments submitted through *http://www.regulations.gov.* Recently published rulemaking documents can also be accessed through the FAA's web page at *http://www.faa.gov/air_traffic/publications/airspace_amendments/.*

You may review the public docket containing the proposal, any comments received, and any final disposition in person in the Dockets Office (see the **ADDRESSES** section for address and phone number) between 9:00 a.m. and 5:00 p.m., Monday through Friday, except federal holidays. An informal docket may also be examined between 8:00 a.m. and 4:30 p.m., Monday through Friday, except federal holidays at the office of the Eastern Service Center, Federal Aviation Administration, Room 350, 1701 Columbia Avenue, College Park, Georgia 30337.

Availability and Summary of Documents for Incorporation by Reference

This document proposes to amend FAA Order 7400.11E, Airspace Designations and Reporting Points, dated July 21, 2020, and effective September 15, 2020. FAA Order 7400.11E is publicly available as listed in the **ADDRESSES** section of this document. FAA Order 7400.11E lists Class A, B, C, D, and E airspace areas, air traffic service routes, and reporting points.

The Proposal

The FAA proposes an amendment to Title 14, Code of Federal Regulations (14 CFR) part 71 to remove Class E airspace extending upward from 700 feet above the surface at Plum Island Airport, Newburyport, MA, as the airport no longer has instrument approaches. Therefore, the airspace is no longer necessary. This action would enhance the safety and management of controlled airspace within the national airspace system.

Class E airspace designations are published in Paragraph 6005 of FAA Order 7400.11E, dated July 21, 2020, and effective September 15, 2020, which is incorporated by reference in 14 CFR 71.1.

The Class E airspace designation listed in this document will be published subsequently in the Order.

FAA Order 7400.11, Airspace Designations and Reporting Points, is published yearly and effective on September 15.

Regulatory Notices and Analyses

The FAA has determined that this proposed regulation only involves an established body of technical regulations for which frequent and routine amendments are necessary to keep them operationally current. It, therefore, (1) is not a ''significant regulatory action'' under Executive Order 12866; (2) is not a ''significant rule'' under DOT Regulatory Policies and Procedures (44 FR 11034; February 26, 1979), and (3) does not warrant preparation of a Regulatory Evaluation as the anticipated impact is so minimal. Since this is a routine matter that will only affect air traffic procedures and air navigation, it is certified that this proposed rule, when promulgated, will not have a significant economic impact on a substantial number of small entities under the criteria of the Regulatory Flexibility Act.

Environmental Review

This proposal would be subject to an environmental analysis in accordance with FAA Order 1050.1F, ''Environmental Impacts: Policies and Procedures'' prior to any FAA final regulatory action.

Lists of Subjects in 14 CFR Part 71

Airspace, Incorporation by reference, Navigation (air).

The Proposed Amendment

In consideration of the foregoing, the Federal Aviation Administration proposes to amend 14 CFR part 71 as follows:

PART 71—DESIGNATION OF CLASS A, B, C, D, AND E AIRSPACE AREAS; AIR TRAFFIC SERVICE ROUTES; AND REPORTING POINTS

■ 1. The authority citation for part 71 continues to read as follows:

Authority: 49 U.S.C. 106(f), 106(g); 40103, 40113, 40120; E.O. 10854, 24 FR 9565, 3 CFR, 1959–1963 Comp., p. 389.

§ 71.1 [Amended]

■ 2. The incorporation by reference in 14 CFR 71.1 of Federal Aviation Administration Order 7400.11E, Airspace Designations and Reporting Points, dated July 21, 2020, effective September 15, 2020, is amended as follows:

Paragraph 6005 Class E Airspace Areas Extending Upward From 700 Feet or More Above the Surface of the Earth.

* * * * *

ANE MA E5 Newburyport, MA [Removed]

Issued in College Park, Georgia, on October 27, 2020.

Matthew N. Cathcart,

Manager, Airspace & Procedures Team North, Eastern Service Center, Air Traffic Organization.

[FR Doc. 2020–24055 Filed 10–30–20; 8:45 am]

BILLING CODE 4910–13–P

DEPARTMENT OF TRANSPORTATION

Federal Aviation Administration

14 CFR Part 71

[Docket No. FAA–2020–0896; Airspace Docket No. 20–ANM–17]

RIN 2120–AA66

Proposed Modification of Class D Airspace; McChord Field (Joint Base Lewis-McChord), WA

AGENCY: Federal Aviation Administration (FAA), DOT.

ACTION: Notice of proposed rulemaking (NPRM).

SUMMARY: This action proposes to modify the Class D airspace at McChord Field (Joint Base Lewis-McChord), Tacoma, WA. After a review of the airspace, the FAA found it necessary to amend the existing airspace for the safety and management of Instrument Flight Rules (IFR) operations at this airport. This proposal would also remove a reference to the McChord VORTAC from the legal description, update the airport name and city, and amend the geographical coordinates for the airport to match the FAA's database.

DATES: Comments must be received on or before December 17, 2020.

ADDRESSES: Send comments on this proposal to the U.S. Department of Transportation, Docket Operations, 1200 New Jersey Avenue SE, West Building Ground Floor, Room W12–140, Washington, DC 20590; telephone: 1–800–647–5527, or (202) 366–9826. You must identify FAA Docket No. FAA–2020–0896; Airspace Docket No. 20–ANM–17, at the beginning of your comments. You may also submit comments through the internet at *https://www.regulations.gov.*

FAA Order 7400.11E, Airspace Designations and Reporting Points, and subsequent amendments can be viewed online at *https://www.faa.gov/air_traffic/publications/.* For further information, you can contact the Airspace Policy Group, Federal Aviation Administration, 800 Independence Avenue SW, Washington, DC 20591; telephone: (202) 267–8783. The Order is also available for inspection at the National Archives and Records Administration (NARA). For information on the availability of FAA Order 7400.11E at NARA, email: *fedreg.legal@nara.gov,* or go to *https://www.archives.gov/federal-register/cfr/ibr-locations.html.*

FOR FURTHER INFORMATION CONTACT: Richard Roberts, Federal Aviation Administration, Western Service Center, Operations Support Group, 2200 S 216th Street, Des Moines, WA 98198; telephone (206) 231–2245.

SUPPLEMENTARY INFORMATION:

Authority for This Rulemaking

The FAA's authority to issue rules regarding aviation safety is found in Title 49 of the United States Code. Subtitle I, Section 106 describes the authority of the FAA Administrator. Subtitle VII, Aviation Programs, describes in more detail the scope of the agency's authority. This rulemaking is promulgated under the authority described in Subtitle VII, Part A, Subpart I, Section 40103. Under that section, the FAA is charged with prescribing regulations to assign the use of airspace necessary to ensure the safety of aircraft and the efficient use of airspace. This regulation is within the scope of that authority as it would modify the Class D airspace to support IFR operations at McChord Field (Joint Base Lewis-McChord), Tacoma, WA.

Comments Invited

Interested parties are invited to participate in this proposed rulemaking by submitting such written data, views, or arguments, as they may desire. Comments that provide the factual basis supporting the views and suggestions presented are particularly helpful in developing reasoned regulatory decisions on the proposal. Comments are specifically invited on the overall regulatory, aeronautical, economic, environmental, and energy-related aspects of the proposal. Communications should identify both docket numbers and be submitted in triplicate to the address listed above. Persons wishing the FAA to acknowledge receipt of their comments on this notice must submit with those comments a self-addressed, stamped postcard on which the following statement is made: ''Comments to Docket No. FAA–2020–0896; Airspace Docket No. 20–ANM–17''. The postcard will be date/time stamped and returned to the commenter.

All communications received before the specified closing date for comments will be considered before taking action on the proposed rule. The proposal contained in this notice may be changed in light of the comments received. A report summarizing each substantive public contact with FAA personnel concerned with this rulemaking will be filed in the docket.

Availability of NPRMs

An electronic copy of this document may be downloaded through the internet at *https://www.regulations.gov.* Recently published rulemaking documents can also be accessed through the FAA's web page at *https://www.faa.gov/air_traffic/publications/airspace_amendments/.*

You may review the public docket containing the proposal, any comments received, and any final disposition in person in the Dockets Office (see the **ADDRESSES** section for the address and phone number) between 9:00 a.m. and 5:00 p.m., Monday through Friday, except federal holidays. An informal docket may also be examined during normal business hours at the Northwest Mountain Regional Office of the Federal Aviation Administration, Air Traffic Organization, Western Service Center, Operations Support Group, 2200 S 216th Street, Des Moines, WA 98198.

Availability and Summary of Documents for Incorporation by Reference

This document proposes to amend FAA Order 7400.11E, Airspace Designations and Reporting Points, dated July 21, 2020, and effective September 15, 2020. FAA Order 7400.11E is publicly available as listed in the **ADDRESSES** section of this document. FAA Order 7400.11E lists Class A, B, C, D, and E airspace areas, air traffic service routes, and reporting points.

The Proposal

The FAA is proposing an amendment to Title 14 Code of Federal Regulations (14 CFR) part 71 by modifying the lateral dimensions of the Class D airspace. The FAA initiated a review of the assigned airspace and drafted the subsequent proposal for modification due to three actions. The FAA decommissioned the McChord VORTAC because the U.S. Air Force was no longer going to maintain the NAVAID. As a result of the decommissioning, the FAA was required to redefine airspace that use the VORTAC as a reference and remove the references from the associated airspace descriptions. The U.S. Air Force requested elimination of previously excluded airspace. In response, the FAA completed an airspace review to evaluate that request and the Class D airspace had not been examined in the previous two years as required by FAA Orders.

The exclusion of Class D airspace that is southeast of the airport would be eliminated to facilitate transition of aircraft through the area. A portion of the airspace overlying Lakewood, WA would also be eliminated, as it is no longer needed.

In addition, the Legal Descriptions Heading would be corrected to identify

the proper city and state, the name of the airport and the geographical coordinates for McChord Field (Joint Base Lewis McChord) to match the FAA's National Airspace System Resource (NASR) database.

Class D and Class E airspace designations are published in paragraph 5000 of FAA Order 7400.11E, dated July 21, 2020, and effective September 15, 2020, which is incorporated by reference in 14 CFR part 71.1. The Class E airspace designations listed in this document will be published subsequently in the Order.

FAA Order 7400.11, Airspace Designations and Reporting Points, is published yearly and effective on September 15.

Regulatory Notices and Analyses

The FAA has determined that this regulation only involves an established body of technical regulations for which frequent and routine amendments are necessary to keep them operationally current, is non-controversial and unlikely to result in adverse or negative comments. It, therefore: (1) Is not a ''significant regulatory action'' under Executive Order 12866; (2) is not a ''significant rule'' under DOT Regulatory Policies and Procedures (44 FR 11034; February 26, 1979); and (3) does not warrant preparation of a regulatory evaluation as the anticipated impact is so minimal. Since this is a routine matter that will only affect air traffic procedures and air navigation, it is certified that this rule, when promulgated, would not have a significant economic impact on a substantial number of small entities under the criteria of the Regulatory Flexibility Act.

Environmental Review

This proposal will be subject to an environmental analysis in accordance with FAA Order 1050.1F, ''Environmental Impacts: Policies and Procedures'' prior to any FAA final regulatory action.

List of Subjects in 14 CFR Part 71

Airspace, Incorporation by reference, Navigation (air).

The Proposed Amendment

Accordingly, pursuant to the authority delegated to me, the Federal Aviation Administration proposes to amend 14 CFR part 71 as follows:

PART 71—DESIGNATION OF CLASS A, B, C, D, AND E AIRSPACE AREAS; AIR TRAFFIC SERVICE ROUTES; AND REPORTING POINTS

■ 1. The authority citation for 14 CFR part 71 continues to read as follows:

Authority: 49 U.S.C. 106(f), 106(g), 40103, 40113, 40120; E.O. 10854, 24 FR 9565, 3 CFR, 1959–1963 Comp., p. 389.

§ 71.1 [Amended]

■ 2. The incorporation by reference in 14 CFR part 71.1 of FAA Order 7400.11E, Airspace Designations and Reporting Points, dated July 21, 2020, and effective September 15, 2020, is amended as follows:

Paragraph 5000 Class D Airspace.

* * * * *

ANM WA D Tacoma, WA [AMEND]

McChord Field (Joint Base Lewis-McChord), WA
(Lat. 47°08′17″ N, long. 122°28′35″ W)

That airspace extending upward from the surface to and including 2,800 feet MSL within a 5.4-mile radius of the McChord Field (Joint Base Lewis-McChord), beginning at the point the 315° bearing intersects the 5.4 mile radius clockwise to the point where the 162° bearing intersects the 5.4 mile radius thence south to lat. 47°02′10″ N, long. 122°26′13″ W, thence west to lat. 47°02′19″ N, long. 122°31′28″ W, thence north to lat. 47°04′17″ N, long. 122°31′26″ W, thence northwest to lat. 47°08′47″ N, long. 122°35′09″ W, thence east to lat. 47°08′35 N, long. 122°03′03 W, thence north to the point of beginning.

Issued in Seattle, Washington, on October 27, 2020.

Byron Chew,

Acting Group Manager, Operations Support Group, Western Service Center.

[FR Doc. 2020–24154 Filed 10–30–20; 8:45 am]

BILLING CODE 4910–13–P

DEPARTMENT OF JUSTICE

Drug Enforcement Administration

21 CFR Parts 1300 and 1301

[Docket No. DEA–437]

RIN 1117–AB47

Suspicious Orders of Controlled Substances

AGENCY: Drug Enforcement Administration, Department of Justice.

ACTION: Notice of proposed rulemaking.

SUMMARY: The Drug Enforcement Administration (DEA) is proposing to revise its regulations relating to suspicious orders of controlled substances, in order to implement the Preventing Drug Diversion Act of 2018 (PDDA) and to clarify the procedures a registrant must follow for orders received under suspicious circumstances (ORUSCs). Upon receipt of an ORUSC, registrants authorized to distribute controlled substances would have a choice of proceeding under one of two options (the ''two option framework''). In addition, these registrants would be required to submit all suspicious order reports to a DEA centralized database, and keep records pertaining to suspicious orders and ORUSCs.

DATES: Electronic comments must be submitted, and written comments must be postmarked, on or before January 4, 2021.

ADDRESSES: To ensure proper handling of comments, please reference ''RIN 1117–AB47/Docket No. DEA–437'' on all correspondence, including any attachments.

Electronic comments: The DEA encourages that all comments be submitted electronically through the Federal eRulemaking Portal, which provides the ability to type short comments directly into the comment field on the web page or attach a file for lengthier comments. Please go to *http://www.regulations.gov* and follow the online instructions at that site for submitting comments. Upon submission of your comment, you will receive a Comment Tracking Number. Please be aware that submitted comments are not instantaneously available for public view on *http://www.regulations.gov.* If you have received a Comment Tracking Number, your comment has been successfully submitted and there is no need to resubmit the same comment. Commenters should be aware that the electronic Federal Docket Management System will not accept comments after 11:59 p.m. Eastern Time on the last day of the comment period.

Paper comments: Paper comments that duplicate the electronic submission are not necessary and are discouraged. Should you wish to mail a paper comment *in lieu of* an electronic comment, it should be sent via regular or express mail to: Drug Enforcement Administration, Attn: DEA Federal Register Representative/DPW, 8701 Morrissette Drive, Springfield, VA 22152.

Paperwork Reduction Act (PRA) Comments: All comments concerning collections of information under the PRA must be submitted to the Office of Information and Regulatory Affairs, Office of Management and Budget (OMB), Attention: Desk Officer for Department of Justice (DOJ), Washington, DC 20503. Please state that

your comment refers to ''RIN 1117–AB47/Docket No. DEA–437.''

FOR FURTHER INFORMATION CONTACT: Scott A. Brinks, Diversion Control Division, Drug Enforcement Administration; Mailing Address: 8701 Morrissette Drive, Springfield, VA 22152, Telephone: (571) 362–3261.

SUPPLEMENTARY INFORMATION:

Posting of Public Comments

Please note that all comments received are considered part of the public record. They will, unless reasonable cause is given, be made available by the DEA for public inspection online at *http://www.regulations.gov.* Such information includes personal identifying information (such as your name, address, etc.) voluntarily submitted by the commenter. The Freedom of Information Act applies to all comments received. If you want to submit personal identifying information (such as your name, address, etc.) as part of your comment, but do not want it to be made publicly available, you must include the phrase ''PERSONAL IDENTIFYING INFORMATION'' in the first paragraph of your comment. You must also place the personal identifying information you do not want to be made publicly available in the first paragraph of your comment and identify what information you want redacted.

If you want to submit confidential business information as part of your comment, but do not want it to be made publicly available, you must include the phrase ''CONFIDENTIAL BUSINESS INFORMATION'' in the first paragraph of your comment. You must also prominently identify confidential business information to be redacted within the comment.

Comments containing personal identifying information and confidential business information identified as directed above will generally be made publicly available in redacted form. If a comment has so much personal identifying information or confidential business information that it cannot be effectively redacted, all or part of that comment may not be made publicly available. Comments posted to *http://www.regulations.gov* may include any personal identifying information (such as name, address, and phone number) or confidential business information included in the text of your electronic submission that is not identified as directed above as confidential.

For easy reference, an electronic copy of this document and supplemental information (including the complete Economic Impact Analysis to this notice of proposed rulemaking) are available in their entirety under the tab ''Supporting Documents'' of the public docket for this action at *http://www.regulations.gov* under FDMS Docket ID: DEA: (RIN 1117–AB47/Docket Number DEA–437) for easy reference.

I. Executive Summary

A. Summary of the Rule

The DEA is revising its regulations relating to suspicious orders of controlled substances in order to implement the Preventing Drug Diversion Act of 2018 (PDDA) and, through the adoption of the two-option framework, to clarify the procedures a registrant must follow for orders received under suspicious circumstances (ORUSCs). Upon receipt of an ORUSC, registrants authorized to distribute controlled substances [1] will have a choice (under the two-option framework) to either: (1) Immediately file a suspicious order report through the DEA centralized database, decline to distribute pursuant to the suspicious order, and maintain a record of the suspicious order and any due diligence related to the suspicious order,[2] or (2) before distributing pursuant to the order, conduct due diligence to investigate each suspicious circumstance surrounding the ORUSC, and maintain a record of its due diligence regarding the ORUSC.[3]

Under the second option, if, through its due diligence, the registrant is able to dispel each suspicious circumstance surrounding the ORUSC within seven calendar days after receipt of the order, it is not a suspicious order. After that determination is made, the registrant may thereafter distribute pursuant to the order. The order need not be reported to the DEA as a suspicious order, but the registrant must maintain a record of its due diligence.[4] However, if the registrant is unable, through its due diligence, to dispel each suspicious circumstance surrounding the ORUSC within seven calendar days after receiving the order, it is a suspicious order. The registrant must then promptly file a suspicious order report through the DEA centralized database, decline to distribute pursuant to the suspicious order, and maintain a record of its due diligence.[5] All suspicious order reports must be made to the DEA centralized database and contain certain required information,[6] and all records of suspicious orders and ORUSCs must be prepared and maintained in accordance with DEA regulations, and must contain certain required information.[7]

Related to this two-option framework, and as discussed in more detail below,[8] the DEA is also defining four terms in its regulations: ''due diligence'', ''order'', ''order received under suspicious circumstances'', and ''suspicious order.'' [9]

B. Summary of the Impact of the Rule

The DEA has analyzed the impact of the rule under Executive Order 12866 (E.O.),[10] E.O. 13771,[11] and the Regulatory Flexibility Act (RFA).[12] The Office of Information and Regulatory Affairs (OIRA) in the Office of Management and Budget has determined that this rulemaking is a significant regulatory action within the meaning of E.O. 12866. The DEA has therefore submitted this rule for review by OMB. In addition, the DEA has determined that this rule has a total cost savings of $2,931,000 and is therefore expected to be an E.O. 13771 deregulatory action. Finally, the DEA is certifying that this rule will not have a significant economic impact on a substantial number of small entities within the meaning of the RFA. The DEA's analysis and conclusions regarding E.O. 12866, E.O. 13771, and the RFA are discussed in further detail, below.[13]

II. Suspicious Orders and the Opioid Epidemic

Identifying and reporting suspicious orders of controlled substances (and refusing to distribute based on such

[1] *See* Section IV.E titled ''Scope of the Rule,'' below.

[2] *Proposed new* 21 CFR 1301.78(a)(1). Although the registrant may not be conducting due diligence to dispel each suspicious circumstance under the first option, it could conduct due diligence related to its initial determination to decline the order. *See proposed new* 21 CFR 1300.01(b)'s definition of ''due diligence'' which includes ''examination of each suspicious circumstance surrounding an order, and examination of all facts and circumstances that may be relevant indicators of diversion in determining whether a person (or a person submitting an order) is engaged in, or is likely to engage in, the diversion of controlled substances.''

[3] *Proposed new* 21 CFR 1301.78(a)(2).

[4] *Proposed new* 21 CFR 1301.78(a)(2)(i).

[5] *Proposed new* 21 CFR 1301.78(a)(2)(ii).

[6] *Proposed new* 21 CFR 1301.78(b).

[7] *Proposed new* 21 CFR 1301.78(c).

[8] *See* Section V.B.3 titled ''Procedures for Identifying and Reporting Suspicious Orders of Controlled Substances,'' below.

[9] *Proposed new* 21 CFR 1300.01(b).

[10] E.O. 12866, ''Regulatory Planning and Review,'' September 30, 1993, published in the **Federal Register** at 58 FR 51735 on October 4, 1993.

[11] E.O. 13771, ''Reducing Regulation and Controlling Regulatory Costs,'' January 30, 2017, published in the **Federal Register** at 82 FR 9339 on February 3, 2017.

[12] 5 U.S.C. 601–612.

[13] *See* Part VI titled ''Impact of Regulatory Changes and Regulatory Analysis,'' below.

orders), has always been, and remains, the responsibility of the DEA registrant.[14] This responsibility is of critical importance because diversion methods are constantly evolving, and because registrants are best situated to know their customers. As the DEA has previously stated, cutting off the controlled substance supply sources of ''drug pushers operating under the patina of legitimate authority'' is not something the DEA can do entirely by itself—rather, the DEA ''must rely on registrants to fulfill their obligation under the [Controlled Substances Act (CSA)] to ensure that they do not supply controlled substances to entities which act as drug pushers.'' [15]

Five closely related legal obligations contained in the CSA [16] and DEA regulations relate to the identification and reporting of suspicious orders: The obligation to maintain effective controls against diversion,[17] to conduct due diligence,[18] to design and operate a system to identify suspicious orders for the registrant,[19] to report suspicious orders (the reporting requirement),[20] and to refuse to distribute controlled substances that are likely to be diverted into illegitimate channels (the shipping requirement).[21] The purpose of identifying and reporting suspicious orders to DEA is to provide DEA investigators in the field with information regarding potential illegal activity in an expeditious manner.

However, at various times, and in various places and manners, some registrants have failed to fulfill their obligations regarding the identification and reporting of suspicious orders. For example, some registrants failed to design or operate any system to identify suspicious orders. Other registrants designed a system, but in doing so relied solely on rigid formulas that may not identify suspicious orders.[22] Still other registrants failed to properly operate a system, by, for example, failing to implement their internal policies regarding due diligence in the identification and reporting of suspicious orders.

Some registrants failed to file timely and specific suspicious order reports, opting instead to file no reports, or rely on the submission of Automation of Reports and Consolidated Information Systems (ARCOS) [23] reports as a purported substitute for submitting suspicious order reports.[24] Other registrants filed end-of-month ''excessive purchase'' reports (that were reported after the order had already been filled), submitted a list of largest purchasers, or reported customers with whom the registrant had terminated a business relationship. Some registrants interpreted the definition of suspicious order found in DEA regulations to extend no further than orders deemed suspicious based on the size, pattern, or frequency of the order or orders.[25] Reports were often filed with DEA Field Division Offices, with no fixed format, and often without a stated reason as to why the order was considered suspicious.

Other registrants filed suspicious order reports, but then distributed controlled substances pursuant to the order anyway—failing to conduct due diligence prior to distributing controlled substances by, for example, keeping sparse or inadequate records and due diligence files, or by merely verifying that their customer was a DEA registrant.

As a consequence of failing to fulfill their obligations regarding the identification and reporting of suspicious orders, some registrants were required to pay large fines and enter into Memorandums of Agreement (MOAs) with DEA requiring, among other things, that they report suspicious orders electronically and centrally to DEA Headquarters.[26]

In sum, this was unsuccessful in detecting and preventing diversion. Suspicious orders ultimately rose to national significance through various cases. For example, one investigation revealed that between 2007 and 2012, wholesale distributors shipped 780 million hydrocodone and oxycodone pills to West Virginia, and 1,728 West Virginians fatally overdosed on these two substances.[27] And in 2013, the nation's largest drug store chain entered into the largest settlement in DEA history, agreeing to pay $80 million in civil fines for, among other things, allegations that it failed to report suspicious orders.[28]

[14] ''DEA registrant'' in this context refers generally to the responsibility of all registrants, and not specifically to any particular group.

[15] *Southwood Pharmaceuticals, Inc.; Revocation of Registration,* published in the **Federal Register** at 72 FR 36487, 36504 on July 3, 2007.

[16] The DEA implements and enforces Titles II and III of the Comprehensive Drug Abuse Prevention and Control Act of 1970 (Pub. L. 91–513), as amended. Titles II and III are known as the ''Controlled Substances Act'' and the ''Controlled Substances Import and Export Act,'' respectively, and are collectively referred to as the ''Controlled Substances Act'' or ''CSA'' for purposes of this document. The CSA is codified at 21 U.S.C. 801–971. The DEA publishes implementing regulations for these statutes in Title 21 of the Code of Federal Regulations (CFR), chapter II.

[17] *See* 21 U.S.C. 823(b)(1) and (e)(1) (requiring the Attorney General to consider ''maintenance of effective controls against diversion'' in determining whether to register an applicant to distribute controlled substances) *and* 21 CFR 1301.71(a) (''[a]ll applicants and registrants shall provide effective controls and procedures to guard against theft and diversion of controlled substances'').

[18] *See* Section IV.D titled ''The Due Diligence Requirement,'' below.

[19] Current DEA regulations require that ''[t]he registrant shall design and operate a system to disclose to the registrant suspicious orders of controlled substances.'' 21 CFR 1301.74(b). Similarly, the PDDA required that the system be designed and operated to ''identify'' suspicious orders for the registrant. For purposes of this document, the PDDA phrase ''identify for'' will be used in place of the phrase ''disclose to.''

[20] *See* 21 CFR 1301.74(b), *and* Sections III.B (titled ''Legal Authority for the Rule: Centralized Reporting Under the PDDA''), III.C (titled ''Legal Authority for the Rule: Other Provisions of the PDDA''), and IV.A (titled ''History of Relevant DEA Regulations''), below.

[21] *See* Section IV.D, titled ''The Due Diligence Requirement,'' below.

[22] Examples of terms used to describe information system formulas in the context of suspicious orders include ''algorithm,'' ''blocked,'' ''flagged,'' ''held,'' ''order of interest,'' ''pended,'' or ''threshold.''

[23] The CSA requires manufacturers and distributors to report their controlled substance transactions to the DEA on a quarterly basis, and the DEA implements this requirement through ARCOS. ARCOS and the ARCOS Distributor Tool are discussed in further detail in Sections IV.B and IV.C, below.

[24] The ARCOS reporting requirement and the suspicious orders serve two different purposes. While ARCOS provides the DEA with information regarding trends in the diversion of controlled substances, the reports need not be submitted until fifteen days after the end of the reporting period. In contrast, a suspicious order must be reported when discovered by the registrant. The suspicious orders reporting requirement exists to provide investigators in the field with information regarding potential illegal activity in an expeditious manner. *See, e.g., Southwood Pharmaceuticals, Inc.; Revocation of Registration,* published in the **Federal Register** at 72 FR 36487, 36501 on July 3, 2007.

[25] 21 CFR 1301.74(b) (suspicious orders ''include orders of unusual size, orders deviating substantially from a normal pattern, and orders of unusual frequency''). For purposes of this document, orders of unusual size, orders deviating substantially from a normal pattern, and orders of unusual frequency will be referred to as ''size, pattern, and frequency orders.'' As discussed below in Section III.C titled ''Legal Authority for the Rule: Other Provisions of the PDDA,'' the PDDA provided that the term suspicious order ''may include, but is no limited to'' size, pattern, and frequency orders.

[26] Registrants were already under a legal obligation to report suspicious orders. The MOAs required that the reports be filed electronically and centrally. Since the deployment of the ARCOS distributor tool and the on-line reporting system, the number of suspicious order reports has increased.

[27] *See* ''Drug firms poured 780M painkillers into WV amid rise of overdoses,'' Eric Eyre Staff Writer, Charleston Gazette-Mail, December 17, 2016. *https://www.wvgazettemail.com/news/cops_and_courts/drug-firms-poured-m-painkillers-into-wv-amid-rise-of/article_99026dad-8ed5-5075-90fa-adb906a36214.html.* The relevance of West Virginia to suspicious orders has been generally recognized and accepted, including by congressional committees, as it illustrated the nature of the relationship and interaction between distributors and their customer pharmacies with respect to controlled substances.

[28] *See* DEA Press Release, ''Walgreens Agrees to Pay a Record Settlement of $80 Million for Civil

Over the years, DEA has taken steps to address suspicious orders based on its own initiative, based on registrant requests that DEA further clarify their obligations under the law and provide registrants with the ability to see the distributions a particular customer has received from other distributors, and based on the PDDA. DEA has provided guidance, training, and individualized meetings for the regulated industry,[29] and has utilized the various enforcement tools available to it under the CSA.[30] DEA has also proactively leveraged the data that is available to it through ARCOS, and has developed a tool through ARCOS to assist distributors in making their suspicious order assessments (the ''ARCOS distributor tool'').[31] In addition, DEA has taken appropriate criminal, civil, and administrative action against distributors, pharmacies, and other practitioners. By proposing this regulation to implement the PDDA and clarify the procedures a registrant must follow in identifying and reporting suspicious orders (and refusing to distribute based on such orders), DEA is taking the next step to address suspicious orders and combat the opioid epidemic.

III. Legal Authority for the Rule

A. Legal Authority for the Rule: The CSA and Rulemaking Authority

The CSA and its implementing regulations are designed to prevent, detect, and eliminate the diversion of controlled substances into the illicit market while ensuring an adequate supply is available for the legitimate medical, scientific, research, and industrial needs of the United States. Controlled substances have the potential for abuse and dependence and are controlled to protect the public health and safety. Through the enactment of the CSA, Congress has established a closed system of distribution by making it unlawful to handle any controlled substance except in a manner authorized by the CSA. In order to maintain this closed system of distribution, the CSA imposes registration requirements on handlers of controlled substances.

The CSA also grants the Attorney General authority to promulgate and enforce any rules, regulations, and procedures which he may deem necessary and appropriate for the efficient executions of his functions under the CSA.[32] The Attorney General delegated these authorities to the Administrator of the DEA, who in turn redelegated many of these authorities to the Deputy Administrator of the DEA and the Assistant Administrator of the DEA Office of Diversion Control.[33]

B. Legal Authority for the Rule: Centralized Reporting Under the PDDA

On October 24, 2018, President Trump signed into law the ''Substance Use-Disorder Prevention that Promotes Opioid Recovery and Treatment for Patients and Communities Act'' (SUPPORT Act).[34] The PDDA was contained within the SUPPORT Act.[35] The PDDA required DEA to establish a centralized database for collecting reports of suspicious orders not later than one year from the date of the PDDA's enactment. Upon discovering a suspicious order or series of orders, the PDDA required registrants to notify the DEA Administrator and Special Agent in Charge of the Division Office of the DEA for the area in which the registrant is located or conducts business, but provided that ''[i]f a registrant reports a suspicious order to the DEA centralized database . . . the registrant shall be considered to have complied with the [notification] requirement . . . .'' [36] With these provisions, the PDDA replaced DEA Field Division Office reporting (reflected in current DEA regulations at 21 CFR 1301.74(b)) with centralized reporting to DEA Headquarters.

C. Legal Authority for the Rule: Other Provisions of the PDDA

In addition to centralized reporting of suspicious orders, the PDDA required each registrant to design and operate a system to identify suspicious orders for the registrant,[37] and to ensure that the system complies with applicable Federal and State privacy laws. The PDDA also provided that the term suspicious order ''may include, but is not limited to'' [38] size, pattern, and frequency orders.

By its codification of the phrase ''may include, but is not limited to,'' the PDDA clarified that an order for controlled substances can be deemed suspicious for reasons other than size, pattern, or frequency (including reasons related to the characteristics of the customer submitting the order).[39] Therefore, systems to identify suspicious orders should be designed and operated in light of the ultimate goal of the suspicious order inquiry: to provide DEA investigators in the field with information regarding potential illegal activity in an expeditious manner. To this end, DEA is proposing to amend its regulations to provide that registrants should design privacy-law-compliant systems [40] not only to identify size, pattern, and frequency orders, but also to identify suspicious orders based on facts and circumstances that may be relevant indicators of diversion in determining whether a person (or a person submitting an order)

Penalties Under the Controlled Substances Act,'' June 11, 2013. *https://www.dea.gov/press-releases/2013/06/11/walgreens-agrees-pay-record-settlement-80-million-civil-penalties-under.*

[29] For example, through its Distributor Initiative, the DEA educated registrants on identification and reporting of suspicious orders and on maintaining effective controls against diversion. As part of the Initiative, the DEA polled ARCOS data and met with individual distributors to highlight various indicia of suspicious orders for their consideration. In addition, the DEA held industry conferences and sent guidance letters to industry regarding suspicious orders.

[30] The CSA provides that it shall be unlawful for any person . . . to refuse or negligently fail to make, keep, or furnish any record, report, notification, declaration, order or order form, statement, invoice, or information required under this subchapter or subchapter II of this chapter . . . .'' 21 U.S.C. 842(a)(5). The CSA also provides that a violation of this section carries a civil penalty which shall not exceed $10,000, but that ''[i]f a violation of this section is prosecuted by an information or indictment which alleges that the violation was committed knowingly and the trier of fact specifically finds that the violation was so committed, such person shall . . . be sentenced to imprisonment of not more than one year or a fine under Title 18, or both. 21 U.S.C. 842(c)(1)(B) and 842(c)(2)(A).In addition to the loss of registration through administrative actions such as Orders to Show Cause and Immediate Suspension Orders, the DEA uses a wide array of diversion enforcement tools to ensure its registrants are in compliance with the CSA. These include civil penalties and criminal charges. *See, e.g., https://www.justice.gov/usao-sdny/pr/manhattan-us-attorney-and-dea-announce-charges-against-rochester-drug-co-operative-and.*

[31] *See* Section IV.C titled ''ARCOS Distributor Tool,'' below.

[32] 21 U.S.C. 871.

[33] 28 CFR 0.100 through 0.104.

[34] Public Law 115–271.

[35] The PDDA is comprised of Sections 3291 and 3292 of the SUPPORT Act.

[36] SUPPORT Act, Section 3292. The registrant's notification requirement is codified at 21 U.S.C. 832(a)(3). The DEA's requirement to establish a centralized database is codified at 21 U.S.C. 832(b).

[37] As noted above, the PDDA provisions are similar to current DEA regulations with respect to the system to identify suspicious orders for the registrant.

[38] SUPPORT Act, Section 3292, *codified at* 21 U.S.C. 802(57). The PDDA's ''may include, but is not limited to'' clause is an addition to existing law, which currently provides that ''[s]uspicious orders include orders of unusual size, orders deviating substantially from a normal pattern, and orders of unusual frequency.'' 21 CFR 1301.74(b).

[39] *See* Section IV.D. titled ''The Due Diligence Requirement,'' below.

[40] The PDDA, Section 3292, as *codified at* 21 U.S.C. 832(a)(2), provides that ''[e]ach registrant shall . . . ensure that the system designed and operated . . . by the registrant complies with applicable Federal and State privacy laws . . . .''

is engaged in, or is likely to engage in, the diversion of controlled substances.[41]

IV. Background Discussion

A. History of Applicable DEA Regulations

Since the CSA became law in 1970, all DEA registrants who distribute controlled substances have had a duty to maintain effective controls against diversion of controlled substances into other than legitimate medical, scientific, and industrial channels.[42] In addition, the first regulations implementing the CSA in 1971 contained provisions regarding suspicious orders of controlled substances.[43] These provisions, as currently codified in DEA regulations, require that registrants design and operate a system to disclose to the registrant suspicious orders of controlled substances, *i.e.,* orders of unusual size, orders deviating substantially from a normal pattern, and orders of unusual frequency.[44] It also requires the registrant to ''inform the Field Division Office of the Administration in his area of suspicious orders when discovered by the registrant.'' [45]

B. History of ARCOS

In addition to the suspicious order provisions, the CSA and DEA regulations also require manufacturers and distributors to report their controlled substance transactions to DEA.[46] DEA implements this requirement through ARCOS.[47] ARCOS is an automated, comprehensive drug reporting system which monitors the flow of controlled substances from their point of manufacture through commercial distribution channels to point of sale or distribution at the dispensing level through the use of acquisition/distribution transaction reports.

Included in the list of controlled substance transactions tracked by ARCOS are the following: All schedule I and II materials (manufacturers and distributors), schedule III narcotic and gamma-hydroxybutyric acid (GHB) materials (manufacturers and distributors), and selected schedule III and IV psychotropic drugs (manufacturers only).[48] ARCOS accumulates these transactions which are then summarized into reports which give investigators in Federal and State government agencies information that can then be used to identify the diversion of controlled substances into illicit channels of distribution. DEA regulations require that ARCOS acquisition/distribution reports be filed every quarter, not later than the 15th day of the month succeeding the quarter for which it is submitted.[49]

C. ARCOS Distributor Tool

Prior to the SUPPORT Act, the DEA developed an ARCOS tool that allowed registrants to obtain a count of the number of registrants who had sold a particular controlled substance to a prospective customer in the last six months.[50] On February 26, 2019, as part of its implementation of the SUPPORT Act, the DEA announced the launch of an enhanced tool to help more than 1,500 registered drug manufacturers and distributors in the U.S. more effectively identify potential illicit drug diversion.[51] The enhancement allows DEA-registered manufacturers and distributors to view and download the number of distributors and the amount (anonymized data in both grams and dosage units) each distributor sold to a prospective customer in the last available six months of data.

D. The Due Diligence Requirement

1. Due Diligence and *Southwood*

In *Southwood,*[52] the registrant failed repeatedly to comply with the effective controls requirement, the system requirement, and the reporting requirement.[53] In *Southwood,* DEA noted that Respondent's due diligence measures, which initially involved nothing more than verifying license and registration, were wholly deficient.[54] DEA stated that:

> ''even after being advised by agency officials that its internet pharmacy customers were likely engaged in illegal activity, Respondent failed miserably to conduct adequate due diligence. Notwithstanding the breadth of information provided during the conference call, Respondent did not stop selling to any of its internet pharmacy customers while it investigated the legitimacy of their business activities.'' [55]

In addition, the DEA concluded that:

> ''Respondent repeatedly violated federal regulations by failing to report suspicious orders . . . Respondent's experience in distributing controlled substances is characterized by recurring distributions of extraordinary quantities of controlled substances to entities which then likely diverted the drugs by filling prescriptions which were unlawful. Moreover, Respondent's due diligence measures were wholly inadequate to protect against the diversion of the drugs. Respondent's failure to maintain effective controls against diversion and its experience in distributing controlled substances thus support the conclusion that its continued registration would be 'inconsistent with the public interest.' '' [56]

In reaching these conclusions, DEA noted:

> ''In short, the direct and foreseeable consequence of the manner in which Respondent conducted its due diligence program was the likely diversion of millions of dosage units of hydrocodone. Indeed, it is especially appalling that notwithstanding the information Respondent received from both this agency and the pharmacies, it did not immediately stop distributing hydrocodone to any of the pharmacies.'' [57]

2. Due Diligence and DEA I and II

In 2006 and 2007, DEA sent letters to DEA registrants outlining their legal

[41] *Proposed amended* 1301.74(b)(1). *See also* Section V.B. titled ''Discussion of Regulatory Changes,'' below.

[42] 21 U.S.C. 823(b)(1) and (e)(1) (requiring the Attorney General to consider ''maintenance of effective controls against diversion'' in determining whether to register an applicant to distribute controlled substances); 21 CFR 1301.71(a) (''[a]ll applicants and registrants shall provide effective controls and procedures to guard against theft and diversion of controlled substances'').

[43] Bureau of Narcotics and Dangerous Drugs, DOJ, ''Regulations Implementing the Comprehensive Drug Abuse Prevention Control Act of 1970,'' published in the **Federal Register** at 36 FR 7775, 7785 on April 24, 1971.

[44] 21 CFR 1301.74(b).

[45] 21 CFR 1301.74(b). As discussed above in Section III.B titled ''Legal Authority for the Rule: Centralized Reporting Under the PDDA,'' the PDDA replaced DEA Field Division Office reporting with centralized reporting to DEA Headquarters.

[46] 21 U.S.C. 827(d) (''Every manufacturer registered under section 823 of this title shall . . . make periodic reports to the [DEA] of every sale, delivery or other disposal by him of any controlled substance, and each distributor shall make such report with respect to narcotic controlled substances, identifying by the registration number assigned under this subchapter the person or establishment (unless exempt from registration under section 822(d) of this title) to whom such sale, delivery, or other disposal was made.'').

[47] The DEA ARCOS regulations are found at 21 CFR 1304.33.

[48] 21 CFR 1304.33(c).

[49] 21 CFR 1304.33(b).

[50] *https://www.dea.gov/press-releases/2018/02/14/dea-creates-new-resource-help-distributors-avoid-oversupplying-opioids.*

[51] *https://www.dea.gov/press-releases/2019/02/26/dea-announces-enhanced-tool-registered-drug-manufacturers-and.*

[52] *Southwood Pharmaceuticals, Inc.; Revocation of Registration,* published in the **Federal Register** at 72 FR 36487 on July 3, 2007.

[53] *Southwood Pharmaceuticals, Inc.; Revocation of Registration,* published in the **Federal Register** at 72 FR 36487, 36498 on July 3, 2007.

[54] *Southwood Pharmaceuticals, Inc.; Revocation of Registration,* published in the **Federal Register** at 72 FR 36487, 36498 on July 3, 2007.

[55] *Southwood Pharmaceuticals, Inc.; Revocation of Registration,* published in the **Federal Register** at 72 FR 36487, 36500 on July 3, 2007.

[56] *Southwood Pharmaceuticals, Inc.; Revocation of Registration,* published in the **Federal Register** at 72 FR 36487, 36501–36502 on July 3, 2007.

[57] *Southwood Pharmaceuticals, Inc.; Revocation of Registration,* published in the **Federal Register** at 72 FR 36487, 36500 on July 3, 2007.

obligations to report suspicious orders and conduct due diligence.[58] These letters emphasized that, as a condition of maintaining their registration, all legitimate handlers of controlled substances must take reasonable steps to ensure that their registration is not being utilized as a source of diversion.[59] If the closed system is to function properly, registrants must be vigilant in deciding whether a prospective customer can be trusted to deliver controlled substances only for lawful purposes.[60] The requirement to report suspicious orders is in addition to, and not in lieu of, the general requirement to maintain effective controls against diversion.[61] Thus, in addition to reporting all suspicious orders, a distributor has a statutory responsibility to exercise due diligence to avoid filling suspicious orders that might be diverted into other than legitimate medical, scientific, and industrial channels.[62] Failure to exercise such due diligence could, as circumstances warrant, provide a statutory basis for revocation or suspension of a distributor's registration.[63] In a similar vein, given the requirement that a registrant maintain effective controls against diversion, a distributor may not simply rely on the fact that the person placing the suspicious order is a DEA registrant and turn a blind eye to the suspicious circumstances.[64] To maintain effective controls against diversion, the registrant should exercise due care in confirming the legitimacy of all orders prior to filling.[65]

In addition, registrants' responsibility does not end merely with the filing of a suspicious order report.[66] Registrants must conduct an independent analysis of suspicious orders prior to completing a sale to determine whether the controlled substances are likely to be diverted from legitimate channels.[67] Reporting an order as suspicious will not absolve the registrant of responsibility if the registrant knew, or should have known, that the controlled substances were being diverted.[68] Registrants that routinely report suspicious orders, yet fill these orders without first determining that order is not being diverted, may be failing to maintain effective controls against diversion; and failure to maintain effective controls against diversion is inconsistent with the public interest as that term is used in the CSA and may result in the revocation of the registrant's DEA Certificate of Registration.[69]

3. Due Diligence and Masters

The *Masters* case,[70] which involved due diligence within the context of a two-part system that the registrant failed to properly operate, illustrates how the due diligence requirement is relevant to both the reporting and shipping requirement. In *Masters,* the registrant created a system consisting of a computer program and a compliance protocol. The computer program was designed to identify and hold any order that met or exceeded the criteria for suspicious orders set out in DEA regulations. Once an order was held, the registrant's staff would implement the compliance protocol, which required an investigation of the order to determine whether it was legitimate. After this investigation, the staff could deem the order non-suspicious and ship it, or treat the order as suspicious, report it to the DEA, and decline to fill the order.[71] However, despite having designed its system to require additional due diligence into ''held'' orders,[72] the registrant failed to actually conduct the additional due diligence.

In the *Masters* Decision and Order, the DEA stated that ''upon investigating an order, a distributor may determine that an order is not suspicious . . . .''[73] The DEA further explained:

> ''[W]hile . . . a distributor's investigation of the order (coupled with its previous due diligence efforts) may properly lead it to conclude that the order is not suspicious, the investigation must dispel all red flags indicative that a customer is engaged in diversion to render the order non-suspicious and exempt it from the requirement that the distributor 'inform' the Agency about the order. Put another way, if even after investigating the order, there is any remaining basis to suspect that a customer is engaged in diversion, the order must be deemed suspicious and the Agency must be informed.''[74]

On appeal in *Masters,* the United States Court of Appeals for the District of Columbia Circuit (the *Masters* Court) stated:

> ''[o]nce a distributor has reported a suspicious order, it must make one of two choices: decline to ship the order, or conduct some 'due diligence' and—if it is able to determine that the order is not likely to be diverted into illegitimate channels—ship the order . . . .''[75]

The *Masters* Court also added:

> ''it is not necessary for a distributor of controlled substances to investigate suspicious orders if it reports them to DEA and declines to fill them. But if a distributor chooses to shoulder the burden of dispelling suspicion in the hopes of shipping any it finds to be non-suspicious, and the distributor uses something like the [Suspicious Order Monitoring Program] Protocol to guide its efforts, then the distributor must actually undertake the investigation.''[76]

Finally, the *Masters* Court rooted due diligence in the reporting requirement, as something that a registrant would perform as part of its duty to report suspicious orders:

> ''In Masters' view, the Administrator amended two notice-and-comment rules in adjudicating this case: [the regulation defining suspicious orders and the regulation defining effective controls against the diversion of controlled substances]. We need not opine on DEA's statutory authority to use an adjudication to modify a rule enacted through notice and comment because the Administrator neither created not imposed any new duties. He relied on the existing Reporting Requirement.''[77]

V. Need for Regulatory Changes and Discussion of Regulatory Changes

A. Need for Regulatory Changes

A change to existing DEA regulations regarding suspicious orders is necessary in order to implement the provisions of the PDDA, and to clarify registrant

[58] Letters from Joseph T. Rannazzisi, Deputy Assistant Administrator, DEA Office of Diversion Control to DEA Registrants, September 27, 2006 (''DEA I'') and December 20, 2007 (''DEA II''). Whereas DEA I discussed the responsibility to exercise due diligence to avoid filling suspicious orders that might be diverted, DEA II reiterated the responsibility to inform the DEA of suspicious orders.

[59] DEA I, pg. 1.

[60] DEA I, pg. 1.

[61] DEA I, pg. 2.

[62] DEA I, pg. 2.

[63] DEA I, pg. 2.

[64] DEA I, pg. 2.

[65] DEA I, pg. 2.

[66] DEA II, pg. 1.

[67] DEA II, pg. 1.

[68] DEA II, pg. 1.

[69] DEA II, pg. 2.

[70] The *Masters* case is comprised of a decision by the United States Court of Appeals for the District of Columbia Circuit Decision and a DEA Decision and Order. *See Masters Pharmaceuticals, Inc.* v. *DEA,* 861 F.3d 206 (D.C. Cir. 2017) and *Masters Pharmaceuticals, Inc.; Decision and* Order, published in the **Federal Register** at 80 FR 55418 on September 15, 2015.

[71] *Masters Pharmaceuticals, Inc.* v. *DEA,* 861 F.3d 206, 213–214 (D.C. Cir. 2017).

[72] In *Masters,* the registrant's system provided that held orders ''be subject to additional due diligence.'' *Masters Pharmaceuticals, Inc.; Decision and* Order, published in the **Federal Register** at 80 FR 55418, 55427 on September 15, 2015.

[73] *Masters Pharmaceuticals, Inc.; Decision and* Order, published in the **Federal Register** at 80 FR 55418, 55420 on September 15, 2015.

[74] *Masters Pharmaceuticals, Inc.; Decision and* Order, published in the **Federal Register** at 80 FR 55418, 55478 on September 15, 2015.

[75] *Masters Pharmaceuticals, Inc.* v. *DEA,* 861 F.3d 206, 212–213 (D.C. Cir. 2017).

[76] *Masters Pharmaceuticals, Inc.* v. *DEA,* 861 F.3d 206, 222 (D.C. Cir. 2017).

[77] *Masters Pharmaceuticals, Inc.* v. *DEA,* 861 F.3d 206, 220 (D.C. Cir. 2017).

obligations under the CSA in light of the issues discussed above.[78]

B. Discussion of Regulatory Changes

1. Implementation of the PDDA

The DEA's implementation of the PDDA will involve amending existing DEA regulations in two sections (21 CFR 1300.01 and 21 CFR 1301.74), and adding a new section to DEA regulations at 21 CFR 1301.78.[79] Specifically, the DEA will implement the PDDA by: (1) Establishing a DEA centralized database for collecting reports of suspicious orders; (2) amending DEA regulations to require that all reports of suspicious orders be submitted through the DEA centralized database;[80] (3) incorporating the PDDA's definition of ''suspicious order'' into DEA regulations;[81] and (4) incorporating the PDDA's requirement that registrants design and operate privacy-law-compliant suspicious order system into DEA regulations.[82]

2. Clarification of Registrant Procedures Regarding Suspicious Orders

In addition to implementing the PDDA, DEA is proposing to amend its regulations to provide registrants with additional clarity regarding the procedures that must be followed upon receiving an order under suspicious circumstances by: (1) Clarifying the scope of the rule (as discussed below);[83] (2) adding definitions of ''order,'' ''order received under suspicious circumstances,'' and ''due diligence'' to DEA regulations;[84] and (3) amending DEA regulations to include procedures for identifying and reporting suspicious orders of controlled substances[85] consistent with the due diligence requirement articulated in the *Masters* and *Southwood* decisions. The proposed definition of ''order'' is intended to reflect existing business practices. The proposed definition of ''order received under suspicious circumstances'' is intended to capture any circumstances that might be indicative of diversion, including but not limited to orders ''blocked,'' ''flagged,'' ''held,'' or ''pended'' by a system designed and operated by a registrant to identify suspicious orders. In addition, DEA is proposing to amend its regulations to clarify that the system to identify suspicious orders shall be designed and operated by the registrant to identify suspicious orders based on facts and circumstances that may be relevant indicators of diversion in determining whether a person (or a person submitting an order) is engaged in, or is likely to engage in, the diversion of controlled substances.[86]

3. Procedures for Identifying and Reporting Suspicious Orders of Controlled Substances

Building on the due diligence requirement discussed in *Southwood* and the two-part system discussed in *Masters,* DEA is amending its regulations to provide that, upon receipt of an ORUSC, registrants shall proceed under the following two-option framework: Either (1) immediately file a suspicious order report through the DEA centralized database, decline to distribute pursuant to the suspicious order, and maintain a record of the suspicious order and any due diligence related to the suspicious order,[87] or (2) before distributing pursuant to the order, conduct due diligence to investigate each suspicious circumstance surrounding the ORUSC, and maintain a record of its due diligence regarding the ORUSC.[88]

If, through its due diligence, the registrant is able to dispel each suspicious circumstance surrounding the ORUSC within seven calendar days after receipt of the order, it is not a suspicious order; after that determination is made, the registrant may then distribute pursuant to the order, and the order need not be reported to DEA as a suspicious order, but the registrant must maintain a record of its due diligence.[89] However, if the registrant is unable, through its due diligence, to dispel each suspicious circumstance surrounding the ORUSC within seven calendar days after receiving the order, it is a suspicious order. The registrant must file a suspicious order report through the DEA centralized database and maintain a record of its due diligence.[90]

All suspicious order reports must be made to the DEA centralized database and contain certain required information,[91] and all records of suspicious orders and ORUSCs must be prepared and maintained in accordance with DEA regulations, and must contain certain required information.[92] Regarding recordkeeping, the proposed rule would require more than just a ''check-the-box'' type of documentation. For example, new proposed § 1301.78(d) requires that the record include ''how the registrant handled such orders,'' ''[w]hat information and circumstances rendered the order actually or potentially suspicious,'' [w]hat steps, if any, the registrant took to investigate the order,'' and ''[i]f the registrant investigated the order, what information it obtained during its investigation, and where the registrant concludes that each suspicious circumstance has been dispelled, the specific basis for each such conclusion . . . .''

Upon notification from DEA that a suspicious order report or reports contain inaccurate or incomplete information, the registrant shall have seven calendar days to correct the inaccurate or incomplete information.[93]

DEA believes that seven calendar days to conduct due diligence is consistent with the *Masters* and *Southwood* decisions, and with the PDDA's mandate that a registrant notify DEA ''upon discovering''[94] a suspicious order. The seven calendar day timeframe strikes an appropriate balance between giving registrants sufficient time to act and also allowing DEA to promptly investigate potential diversion, while also recognizing that discovering a suspicious order sometimes involves a process of dispelling suspicious circumstances, and that any ORUSC that cannot be dispelled within seven days is a suspicious order (assuming that the system to identify suspicious orders for the registrant is properly designed and operated).

4. Scope of the Rule

Because the requirements related to suspicious orders are based on the CSA definition of ''distribute,''[95] this

[78] *See* Section II titled ''Suspicious Orders and the Opioid Epidemic,'' above.

[79] The existing regulations to be amended at 21 CFR 1300.01 are titled ''Definitions relating to controlled substances'' and at 21 CFR 1301.74 are titled ''Other security controls for non-practitioners; narcotic treatment programs and compounders for narcotic treatment programs.'' In addition to amending the text of 21 CFR 1301.74, the DEA is amending the title of 21 CFR 1301.74 to clarify that it applies to ''non-practitioners and practitioners for orders received under suspicious circumstances.'' The new regulations at 21 CFR 1301.78 are titled ''Procedures for identifying and reporting suspicious orders of controlled substances.''

[80] *Proposed new* 21 CFR 1301.78(a)(1) and (a)(2)(ii).

[81] *Proposed amended* 21 CFR 1300.01(b).

[82] *Proposed amended* 21 CFR 1301.74(b).

[83] *Proposed amended title* to 21 CFR 1301.74 and *proposed amended* 21 CFR 1301.74(b).

[84] *Proposed amended* 21 CFR 1300.01(b).

[85] *Proposed amended* 21 CFR 1301.74(b) and *proposed new* 21 CFR 1301.78.

[86] *Proposed amended* 21 CFR 1301.74(b).

[87] *Proposed new* 21 CFR 1301.78(a)(1).

[88] *Proposed new* 21 CFR 1301.78(a)(2).

[89] *Proposed new* 21 CFR 1301.78(a)(2)(i).

[90] *Proposed new* 21 CFR 1301.78(a)(2)(ii).

[91] *Proposed new* 21 CFR 1301.78(b).

[92] *Proposed new* 21 CFR 1301.78(c).

[93] *Proposed new* 21 CFR 1301.78(b).

[94] Sec. 3292.

[95] *See* 21 U.S.C. 802(11) (''[t]he term 'distribute' means to deliver (other than by administering or dispensing) a controlled substance''), 21 U.S.C. 823(b)(1) and (e)(1) (requiring the Attorney General to consider ''maintenance of effective controls

proposed rule applies to registrants authorized to distribute controlled substances either directly (under the registrant's business activity), indirectly (as a coincident activity to the business activity), under the five percent rule, or as a treatment program compounding narcotics for treatment programs and other locations.[96] The five percent rule permits a practitioner dispenser, under certain circumstances, to distribute controlled substances to another practitioner without having to obtain a separate DEA registration as a distributor a practitioner who is registered to dispense a controlled substance may distribute (without being registered to distribute) a quantity of such substance to another practitioner for the purpose of general dispensing by the practitioner to patients, provided *inter alia* that the total number of dosage units of all controlled substances distributed by the practitioner during each calendar year does not exceed 5 percent of the total number of dosage units of all controlled substances distributed and dispensed by the practitioner during the same calendar year.[97]

Therefore, this proposed rule applies not only to persons who are registered with DEA under the business activity of distributor, but also to manufacturers and importers (who are permitted to distribute controlled substances as a coincident activity to their manufacturer or importer registration),[98] practitioners,[99] (who are permitted to distribute controlled substances pursuant to the five percent rule without obtaining a separate registration as a distributor), and Narcotic Treatment Programs (NTPs) distributing in controlled substances in bulk form to other NTPs. These registrants are authorized to *distribute* controlled substances after receiving an order from another DEA registrant.

However, the rule does not apply to reverse distributors, who are authorized by their registration to *acquire* controlled substances for the purpose of return or destruction[100] after receiving an order from another DEA registrant. In addition, because the CSA distinguishes the terms ''dispense'' and ''administer'' from the term ''distribute,''[101] the rule does not apply to controlled substances dispensed or administered within the normal course of professional practice of a practitioner, to include prescriptions filled by a pharmacy. Therefore, pursuant to the five percent rule, a pharmacy will have to report suspicious orders for distributions of controlled substances, but would not, for example, have to report as a suspicious order, suspicious requests by a patient to have a controlled substance prescription filled.[102]

VI. Impact of Regulatory Changes and Regulatory Analysis

A. Executive Orders 12866 (Regulatory Planning and Review), 13563 (Improving Regulation and Regulatory Review), and 13771 (Reducing Regulation and Controlling Regulatory Costs)

1. Introduction

E.O. 12866 directs agencies to assess all costs and benefits of available regulatory alternatives, and, when regulation is necessary, to select regulatory approaches that maximize net benefits (including potential economic, public health and safety, and environmental advantages, as well as distributive impacts and equity). E.O. 13563 is supplemental to and reaffirms the principles, structures, and definitions governing regulatory review as established in E.O. 12866.

Under E.O. 12866, significant regulatory actions require review by OMB. Significant regulatory actions can be either economically significant or non-economically significant. An economically significant regulatory action is any regulatory action that is likely to result in a rule that may have an annual effect on the economy of $100 million or more, or adversely affect in a material way the economy, a sector of the economy, productivity, competition, jobs, environment, public health or safety, or State, local, or tribal governments or communities.[103] A non-economically significant regulatory action is any regulatory action that is likely to result in a rule that may create a serious inconsistency or otherwise interfere with an action taken or planned by another agency, may materially alter the budgetary impact of entitlements, grants, user fees, or loan programs or the rights and obligations of recipients thereof, or may raise novel legal or policy issues arising out of legal mandates, the President's priorities, or the principles set forth in E.O 12866.[104]

E.O. 13771 requires an agency, unless prohibited by law, to identify at least two existing regulations to be repealed when the agency publicly proposes for notice and comment or otherwise promulgates a new regulation.[105] In furtherance of this requirement, E.O. 13771 requires that the new incremental costs associated with new regulations, to the extent permitted by law, be offset by the elimination of existing costs associated with at least two prior regulations.[106] According to OMB guidance implementing E.O. 13771, the requirements of E.O. 13771 only apply to each new E.O. 12866 ''significant regulatory action . . . that has been finalized and that imposes total costs greater than zero.''[107] Furthermore, an action that has been finalized and has total costs less than zero is an ''Executive Order 13771 deregulatory action.''[108]

DEA has analyzed the economic impact of each provision of this rule and, for the reasons discussed in detail

against diversion'' in determining whether to register an applicant to distribute controlled substances) *and* 21 CFR 1301.74(a) (''[b]efore *distributing* a controlled substance'' a registrant shall make a good faith inquiry to determine that their customer is registered to possess the controlled substance) (emphasis added).

[96] *See* 21 CFR 1304.25(a)(7) (requiring persons registered or authorized to compound narcotic drugs for off-site use in a narcotic treatment program to maintain records of the quantity *distributed* in bulk form to other programs) (emphasis added).

[97] 21 CFR 1307.11(a)(1)(iv).

[98] 21 CFR 1301.13(e)(1)(i) and (viii).

[99] 21 U.S.C. 802(21) (''[t]he term 'practitioner' means a physician, dentist, veterinarian, scientific investigator, pharmacy, hospital, or other person licensed, registered, or otherwise permitted, by the United States or the jurisdiction in which he practices or does research, to distribute, dispense, conduct research with respect to, administer, or use in teaching or chemical analysis, a controlled substance in the course of professional practice or research''). As discussed below, the specific practitioners affected by this rule are pharmacies, hospital/clinics teaching institutions, practitioners, mid-level practitioners (MLPs), MLP-ambulance service, researchers, and analytical labs.

[100] *See* 21 CFR 1300.01(b) (defining ''Reverse distribute'' and ''Reverse distributor'').

[101] *See* 21 U.S.C. 802(2) (defining ''administer''), 21 U.S.C. 802(10) (defining ''dispense''), and 21 U.S.C. 802(11) (defining ''distribute''). *Compare* 21 U.S.C. 802(11) (defining distribute as ''to deliver [a controlled substance] (other than by administering or dispensing) . . . .'') *with* 21 U.S.C. 802(10) (defining dispense as ''to deliver a controlled substance to an ultimate user or research subject by, or pursuant to the lawful order of, a practitioner, including the prescribing and administering of a controlled substance . . . .'').

[102] Although, in this example, the pharmacy would not have a duty to report a suspicious order, this scenario would nevertheless be relevant to the pharmacist's ''corresponding responsibility.'' *See* 21 CFR 1306.04(a) (''[t]he responsibility for the proper prescribing and dispensing of controlled substances is upon the prescribing practitioner, but a corresponding responsibility rests with the pharmacist who fills the prescription'').

[103] Executive Order 12866, Sec. 3(f)(1).

[104] Executive Order 12866, Sec. 3(f)(2)–(4).

[105] Executive Order 13771, Sec. 2(a).

[106] Executive Order 13771, Sec. 2(c).

[107] Executive Office of the President, Office of Management and Budget, M–17–21, April 5, 2017. *https://www.whitehouse.gov/sites/whitehouse.gov/files/omb/memoranda/2017/M-17-21-OMB.pdf,* pg. 3.

[108] Executive Office of the President, Office of Management and Budget, M–17–21, April 5, 2017. *https://www.whitehouse.gov/sites/whitehouse.gov/files/omb/memoranda/2017/M-17-21-OMB.pdf,* pg. 4.

below, estimates this rule will have a cost savings of approximately $2.9 million. Additionally, DEA does not anticipate that this rulemaking will have an annual effect on the economy of $100 million or more or adversely affect in a material way the economy, a sector of the economy, productivity, competition, jobs, the environment, public health or safety, or State, local, or tribal governments or communities. OIRA has determined that this rulemaking is a significant regulatory action within the meaning of E.O. 12866. DEA has, therefore, submitted this rule for review by OMB.

Because this rule is estimated to have total costs less than zero, it is expected to be an E.O. 13771 deregulatory action.

2. Four Key Areas of Change

There are four key areas of regulatory change in this rule: (1) Definitions of new terms, (2) explicit inclusion of registrants, other than reverse distributors, who are authorized to distribute, (3) procedures for identifying and reporting suspicious orders, and (4) reporting and recordkeeping requirements.

With the exception of reverse distributors, this rule affects all registrants who are authorized to distribute controlled substances: Distributors, manufacturers, importers, pharmacies, hospital/clinics teaching institutions, practitioners, mid-level practitioners (MLPs), MLP-Ambulance Service, Researchers, Analytical Labs, and NTPs. As of May 6, 2019, there were 1,731 registrations authorizing the distribution of controlled substances, either directly (under the registrant's business activity) (873 distributor), or indirectly as a coincident activity to the business activity (586 manufacturer and 272 importer). Additionally, based on a sampling of DEA Forms 222 received at DEA Field Division Offices pursuant to 21 CFR 1305.13(d), DEA estimates that there are approximately 15,974 practitioners and NTPs who distribute controlled substances under the five percent rule or as a treatment program compounding narcotics for treatment programs and other locations.

a. Definition of Terms

The rule will incorporate the PDDA's definition of ''suspicious order'' into DEA regulations. Furthermore, to provide clarity, the rule also adds definitions of three additional terms: ''order,'' ''order received under suspicious circumstances,'' and ''due diligence.'' The PDDA definition of ''suspicious order'' parallels the long-standing definition of ''suspicious orders'' in DEA regulations, and does not expand or contract the current understanding of what are suspicious orders.

The definition of ''order'' clarifies and codifies the meaning in the context of suspicious orders. The DEA believes that this is consistent with the current understanding of the term order and anticipates this definition will not cause a change in the number of suspicious orders or change in registrant business activities. Therefore, DEA believes defining order in DEA regulations will have no economic impact on affected registrants.

The rule also includes definitions of ''order received under suspicious circumstances'' and ''due diligence.'' These definitions are intended to provide clarity in describing the procedures for identifying and reporting suspicious orders. DEA does not anticipate an increase or decrease in the number of suspicious orders reported as a direct result of the new definitions. Therefore, DEA estimates this definition will have no economic impact.

b. Explicit Inclusion of Registrants, Other Than Reverse Distributors, Who Are Authorized To Distribute

The rule amends DEA regulations to clarify that, in addition to entities that hold registration as distributors, the requirement to design and operate a system to identify suspicious orders of controlled substances for the registrant that complies with applicable Federal and State privacy laws shall also apply to practitioners when such distributions are made pursuant to the five percent rule.

This is a clarification of currently existing requirements. As all registrants are required to maintain effective controls against diversion of controlled substances, the DEA believes all practitioners who distribute pursuant to the provisions of the five percent rule already understand the requirement to ''design and operate a system'' also applies to them as well. A ''system'' in this context is a combination of people, process, and tools (such as an information system). Some registrants may rely more on information systems while other may rely more on manual processes. Regardless of whether the system is automated or manual, DEA believes the pharmacies and other practitioners who distribute pursuant to the five percent rule currently understand and operate such a system. Therefore, this proposed explicit inclusion of pharmacies and other practitioners in 21 CFR 1301.74(b) is estimated to result in no cost to affected registrants.

c. Procedures for Identifying and Reporting Suspicious Orders of Controlled Substances

The two-option framework for identifying suspicious orders is a codification of existing practices, and therefore, there is no added cost associated with the proposed suspicious order determination process. *Masters* and *Southwood* interpreted the suspicious order provisions by articulating that, upon receiving a suspicious order, a registrant has a duty to conduct due diligence before distributing pursuant to the order. DEA believes nearly all affected registrants explicitly or implicitly utilize the two-option framework. All suspicious order reports must be made to the DEA centralized database and contain certain required information, and all records of suspicious orders and ORUSCs must be prepared and maintained in accordance with DEA regulations, and must contain certain required information. Moreover, DEA estimates there is time and cost savings resulting from using the ARCOS Distributor Tool while conducting due diligence.

Between 2014 and 2018, there were an average of 338,840 suspicious order reports per year. This figure includes an estimated average of 308,540 suspicious orders per year reported to the central database and an estimated average of 30,300 orders per year reported to field offices.[109] While the two-option framework has been in practice for a long time, DEA believes the reporting of suspicious orders versus reporting of ORUSCs has the potential to be more consistent. DEA believes, under current regulations, registrants make suspicious order reports for all ORUSCs, regardless of whether due diligence was conducted and suspicions were dispelled.

Under the proposed rule, the DEA estimates all reported average of 338,840 suspicious orders per year are ORUSCs. Based on general understanding of registrant operations and informal anecdotal discussions with registrants, DEA assumes for the purposes of this analysis that of the 338,840 suspicious

[109] A suspicious orders central database has been in operation since prior to 2014 to allow certain registrants to report electronically pursuant to an MOA. The number of suspicious order reports steadily decreased from 447,140 in 2014 to 102,434 in 2018 due to the decrease in number of registrants under an MOA. Despite this decrease, the DEA uses an average (rather than projecting a trend) of 338,840 because the decrease is a result of fewer registrants reporting, not decreasing number of reported suspicious orders. Since the DEA does not have much data beyond what was reported to the central database, it decided to use the data as-is. The average number of suspicious orders reported to the field is based on a poll of field offices conducted in 2017.

orders that would be classified as ORUSC under the proposed rule, 10 percent (33,884) would fall under option 1, immediately deemed suspicious and reported as ''suspicious orders.'' Accordingly, the registrant would conduct due diligence on the remaining 90 percent (304,956), with the suspicion dispelled and order filled for 80 percent (271,072), and suspicion not dispelled and order rejected for the remaining 10 percent (33,884). In summary, DEA assumes that 20 percent of ORUCSs would be reported as suspicious orders and rejected, while the suspicion would be dispelled and order filled for 80 percent. DEA believes many orders previously (and currently) reported as ''suspicious orders'' to the central database were eventually filled after conducting due diligence and dispelling suspicion.

DEA estimates many registrants will use the ARCOS Distributor Tool in conducting due diligence. Estimated time savings is zero for those registrants who do not use the tool and approximately 30 minutes for those registrants using the tool to conduct due diligence. DEA does not have a strong basis to estimate the number of registrants who use the ARCOS Distributor Tool for conducting due diligence, but conservatively estimates the use of the tool will save registrants, on average, 10 minutes each time due diligence is conducted. Therefore, DEA estimates using the ARCOS Distributor Tool will save a total of 50,826 hours per year [110] while conducting due diligence. Based on a loaded hourly rate of $52.46 for a ''compliance officer,'' [111] DEA estimates the cost savings (negative cost) from using the ARCOS Distributor Tool while conducting due diligence is approximately $2,666,000 (50,826 × $52.46, rounded). As indicated above, DEA does not have a strong basis to estimate the number of times due diligence is conducted and how much time the ARCOS Distributor Tool saves per each time due diligence is conducted.[112] DEA welcomes any comments related to this estimate.

d. Reporting and Recordkeeping Requirements

The rule contains new requirements that specify the reporting method, time limit for reporting, recordkeeping, and contents of the record. The rule requires, regardless of whether the suspicious order determination resulted from option 1 or option 2, a suspicious order report be submitted no later than seven calendar days after the order was received. The rule also requires suspicious order reports be made to the DEA centralized database. The report must include:

(1) The DEA registration number of the registrant placing the order for controlled substances;

(2) The date the order was received;

(3) The DEA registration number of the registrant reporting the suspicious order;

(4) The National Drug Code number, unit, dosage strength, and quantity of the controlled substances ordered;

(5) The order form number for schedule I and schedule II controlled substances;

(6) The unique transaction identification number for the suspicious order; and

(7) What information and circumstances rendered the order actually suspicious.

The seven calendar day reporting timeframe and the reporting of specific information to the DEA centralized database provide standardization and consistency for reporting suspicious orders. First, the seven calendar day time limit on reporting suspicious orders is estimated to impose minimal additional cost. DEA believes the requirement to report suspicious orders within seven calendar days of receiving the order is a reasonable balance between registrant operational demands, and prompt action that can lead to investigative leads. The current requirement is to report suspicious orders ''when discovered'' by the registrant.'' [113] DEA believes the vast majority of suspicious orders are already reported within the seven calendar day period. Therefore, DEA estimates any cost associated with the seven calendar day time requirement is minimal.

Second, reporting to the DEA centralized database is estimated to impose no additional burden. Based on DEA's registration data, nearly 99 percent of applications for registration or renewal of registration in the previous 12 months (May 2018 to April 2019) were made online. Furthermore, although the email address is an optional data field, nearly all registrations have an email address on record. Based on these facts and the high rate of internet use in the general U.S. population,[114] it is reasonable to estimate virtually all affected registrants have information systems capable of completing, submitting, and retaining electronic suspicious order reports at minimal additional cost. DEA acknowledges that is possible for an affected registrant not to have broadband internet access, especially in rural areas. DEA welcomes any comments regarding cost of obtaining broadband access or the cost of complying with the proposed regulations without onsite broadband internet access. No special software or equipment will be required to access and make reports to the DEA centralized database. Also, the DEA centralized database interface is very similar to ARCOS which a majority of manufacturers and distributors already use. Thus, a manufacturer or distributor familiar with ARCOS would require minimal learning when initially using the DEA centralized database. Additionally, the proposed content of suspicious order reports is a codification of content expected of current suspicious order reports or content subsequently requested by DEA if not provided in a suspicious order report. Furthermore, DEA estimates, for the estimated 30,300 suspicious order reports currently reported to the field offices, there will be an average time savings of ten minutes per report. The centralized database programmatically requires the required information in a suspicious order report. Currently, when a suspicious order report is received in the field office, it often lacks needed information. In such instances, the reporting registrant is highly likely to receive a call-back or an on-site interview from the field office, requiring more of the registrant's time to respond

[110] 304,956 × 10 × (1/60) = 50,826.

[111] The DEA utilizes the wage rate for ''Compliance Officer'' (SOC 13–1041, 2018 Standard Occupational Classification, *https://www.bls.gov/soc/2018/major_groups.htm*), in the ''Merchant Wholesalers, Nondurable Goods (4242 and 4246 only)'' industry. The mean hourly wage for that position and industry according to the May 2018 National Occupational Employment and Wage Estimates United States (*https://www.bls.gov/oes/current/oes_nat.htm*) is $36.76. Based on the BLS report, ''Employer Costs for Employee Compensation—March 2019,'' (ECEC) (*https://www.bls.gov/news.release/pdf/ecec.pdf*) an additional 42.7% load (for ''private industry'') is added to the wage rate to account for benefits. $36.76 × 1.427 = $52.46.

[112] In addition to cost savings resulting from the use of the ARCOS Distributor Tool in conducting due diligence of an ORUSC, DEA anticipates there will be a cost savings to registrants from using the ARCOS Distributor Tool during a manufacturer or distributor's ''on-boarding'' process for accepting a new customer. While the ARCOS Distributor Tool is expected to save manufacturers and distributors time and cost associated with due diligence conducted during the evaluation of a prospective customer, each registrant is expected to have its own proprietary process for the evaluation and DEA does not have a strong basis to quantify the cost savings.

[113] 21 CFR 1301.74(b).

[114] An estimated 81% of households in U.S. households had a broadband internet subscription in 2016. Camille Ryan, U.S. Census Bureau, *Computer and Internet Use in the United States: 2016,* Issued August 2018.

to DEA's inquiries. Additionally, the reduction in the number of ORUSC reported as suspicious order is expected to contribute to this decrease.[115] Therefore, DEA estimates reporting to the centralized database will save a total of 5,050 hours per year.[116] Based on a loaded hourly rate of $52.46 for a ''compliance officer,'' [117] DEA estimates the cost savings (negative cost) from using the centralized database is approximately $265,000 (5,050 × $52.46, rounded). DEA does not have a strong basis to estimate the time savings per a suspicious order report currently received in the field. DEA welcome any comments related to this estimate.

Additionally, the rule requires registrants to maintain a record of every suspicious order and every ORUSC, and how the registrant handled such orders.[118] The record must be prepared no later than seven calendar days after the suspicious order or ORUSC was received and must include the following information:

(1) What information and circumstances rendered the order actually or potentially suspicious;

(2) What steps, if any, the registrant took to conduct due diligence;

(3) If the registrant conducted due diligence, what information it obtained during its investigation, and where the registrant concludes that each suspicious circumstance has been dispelled, the specific basis for each such conclusion; and

(4) Whether or not the registrant distributed controlled substances pursuant to the order.

DEA believes registrants already maintain all records documenting each suspicious order and ORUSC. DEA believes these records, in form of notations made in their internal order management systems, are maintained for at least two years as part of their ordinary business operations, even if the registrants are able to dispel the suspicious circumstances. DEA estimates the number of ORUSC will not increase as a result of the rule and remain at current levels. DEA estimates any additional costs associated with the recordkeeping requirements are minimal.

3. Summary of Costs

DEA has analyzed the economic impact of each provision of this rule and estimates there will be a total cost savings of $2,931,000. The two-option framework for identifying suspicious orders is a codification of current practices, and DEA believes nearly all affected registrants explicitly or implicitly utilize the two-option framework. DEA estimates there will be a cost savings of $2,666,000 from the implementation of the ARCOS Distributor Tool, which saves time when conducting due diligence. Additionally, reporting suspicious orders to the DEA centralized database, which saves time when reporting suspicious orders, is estimated to save of $265,000. All DEA registrants are believed to have access to the use of an internet-connected computer at no additional cost. Based on DEA's registration data, nearly 99 percent of applications for registration or renewal of registration in the previous 12 months (May 2018 to April 2019) were made online. Although the email address is an optional data field, virtually all registrations have an email address on record. No special software or equipment will be required to access and make reports to the DEA centralized database. Finally, the DEA believes registrants already create and maintain all records documenting each suspicious order and ORUSC in the form of notations made in their internal order management systems.

4. Summary of Benefits

DEA believes there are numerous non-quantifiable benefits associated with this rule. First, adding the definition of ''suspicious order'' aligns DEA's regulations with the PDDA, and adding other terms provides clarity and enhances understanding of required procedures when an ORUSC is received. Second, the rule's suspicious order determination process would formalize current business practices and create consistency across all registrants and DEA Field Division Offices. Third, reporting suspicious orders to the DEA centralized database would standardize reporting procedures, content of the reports, and how the reports are handled within the DEA. Suspicious orders are being reported centrally to DEA by some registrants, and the ease and efficiency of this electronic submission has been embraced by these registrants. Finally, the DEA centralized database would allow DEA to efficiently collect the data in a single database, and to generate macro-level reports and investigative leads.

B. Executive Order 12988

This rule meets the applicable standards set forth in sections 3(a) and 3(b)(2) of E.O. 12988, Civil Justice Reform to eliminate ambiguity, minimize litigation, establish clear legal standards, and reduce burden.

C. Executive Order 13132

This rule does not have federalism implications warranting the application of E.O. 13132. The rule does not have substantial direct effects on the States, on the relationship between the National Government and the States, or the distribution of power and responsibilities among the various levels of government.

D. Executive Order 13175

This rule does not have substantial direct effects on the States, on the relationship between the National Government and the States, or the distribution of power and responsibilities between the Federal Government and Indian tribes.

E. Regulatory Flexibility Act

In accordance with the RFA,[119] the DEA evaluated the impact of this rule on small entities. DEA's evaluation of economic impact by size category indicates that the rule will not, if promulgated, have a significant economic impact on a substantial number of these small entities.

The RFA requires agencies to analyze options for regulatory relief of small entities unless it can certify that the rule will not have a significant impact on a substantial number of small entities. For purposes of the RFA, small entities include small businesses, nonprofit organizations, and small governmental jurisdictions. DEA has analyzed the economic impact of each provision of this rule and estimates the rule will have minimal economic impact on affected persons, including small entities.

The PDDA definition of suspicious order parallels the long-standing definition of suspicious order in DEA regulations, and does not expand or contract the current understanding of what is a suspicious order. The definition of ''order'' clarifies and codifies the meaning of the word in the context of suspicious orders. DEA believes that this is not a departure from the current understanding of the term order, and anticipates this definition will not cause a change in the number of suspicious orders or change in registrant business activities. The definitions of ''order received under suspicious circumstances'' and ''due diligence'' codify current understanding of the term and provide clarity in describing the procedures for

[115] Similar to the discussion above, a total of 20% of ORUSCs are suspicious orders that require reporting to the DEA. The remaining 80% of ORUSCs are estimated to have suspicion dispelled.

[116] 30,300 × 10 × (1/60) = 50,826.

[117] *See* Footnote 78, above.

[118] *Proposed new* 21 CFR 1301.78(c).

[119] 5 U.S.C. 601–612.

identifying and reporting suspicious orders. Therefore, DEA believes the number of ORUSCs that are investigated, and the number of suspicious orders that are reported will remain consistent with current levels, and will not increase as result of this rule.

The requirement to design and operate a system to identify suspicious orders of controlled substances is not new, but is a clarification of existing requirements for distributors, manufacturers, importers, practitioners, and NTPs. All registrants are required to maintain effective controls, and to design and operate the system. Regardless of whether the system (understood as a combination of people, process, and tools) is automated or manual, DEA believes that distributors, manufacturers, importers, practitioners, and NTPs currently understand and operate such a system. Therefore, the system requirement is estimated to result in no cost to affected registrants.

This two-option framework for identifying suspicious orders is a codification of current practices. *Masters* and *Southwood* interpreted the suspicious order provisions by articulating that, upon receiving a suspicious order, a registrant has a duty to conduct due diligence before distributing pursuant to the order. DEA believes nearly all affected registrants explicitly or implicitly utilize the two-option framework. All suspicious order reports must be made to the DEA centralized database and contain certain required information, and all records of suspicious orders and ORUSCs must be prepared and maintained in accordance with DEA regulations, and must contain certain required information. DEA believes the two-option framework is a codification of existing business practices, and therefore, the number of ORUSCs and the number of suspicious orders reported will remain consistent with current levels. As discussed earlier, *Masters* and *Southwood* interpreted the suspicious order provisions by articulating that, upon receiving a suspicious order, a registrant has a duty to conduct due diligence before distributing pursuant to the order. DEA believes nearly all affected registrants explicitly or implicitly utilize the two-option framework. Moreover, DEA estimates there is time and cost savings resulting from using the ARCOS Distributor Tool while conducting due diligence.

As previously detailed,[120] DEA estimates due diligence will be conducted on 90 percent (304,956) of all ORUSCs. DEA believes all registrants will use the ARCOS Distributor Tool in conducting due diligence and the use of the tool will save registrants 10 minutes each time due diligence is conducted. Therefore, DEA estimates using the ARCOS Distributor Tool will save a total of 50,826 hours per year while conducting due diligence. Based on a loaded hourly rate of $52.46 for a ''compliance officer'' [121] DEA estimates the cost savings from using the ARCOS Distributor Tool while conducting due diligence is approximately $2,666,000.

The rule requires, regardless of whether the suspicious order determination resulted from option 1 or option 2, a suspicious order report be submitted no later than seven calendar days after the order was received. The report must be made to the DEA centralized database with certain required information. DEA believes the requirement to report suspicious orders within seven calendar days of receiving the order is a reasonable balance between registrant operational demands, and DEA's need for prompt action that can lead to investigative leads. DEA believes the vast majority of suspicious orders are already reported within the seven calendar day period. Therefore, DEA estimates any cost associated with the seven calendar day time requirement is minimal. Additionally, reporting to the DEA centralized database is estimated to impose no additional burden. All DEA registrants are believed to have access to the use of an internet-connected computer at no additional cost. Based on DEA's registration data, nearly 99 percent of applications for registration or renewal of registration in the previous 12 months (May 2018 to April 2019) were made online. Although the email address is an optional data field, virtually all registrations have an email address on record. No special software or equipment will be required to access and make reports to the DEA centralized database. Based on these facts it is reasonable to estimate virtually all affected registrants have information systems capable of completing, submitting, and retaining electronic suspicious order reports at no additional cost. Furthermore, as detailed in section IV.1.b.iv, DEA estimates, for the estimated 30,300 suspicious order reports reported to the field, there will be a time savings of ten minutes per report. The centralized database programmatically requires the required information in a suspicious order report. Currently, when a suspicious order report is received in the field office, it often lacks needed information. In such instances, the reporting registrant is highly likely to receive a call-back or an on-site interview from the field office, requiring more of registrant's time to respond to DEA's inquiries. Additionally, the reduction in the number of ORUSC reported as suspicious order is expected to contribute to this decrease. Therefore, DEA estimates reporting to the centralized database will save a total of 5,050 hours per year. Based on a loaded hourly rate of $52.46 for a ''compliance officer,'' [122] DEA estimates the cost savings (negative cost) from using the centralized database is approximately $265,000.

Finally, the registrant must maintain a record of each suspicious order and ORUSC, and how the registrant handled the order, for two years. The record must be prepared no later than seven calendar days after the suspicious order or ORUSC was received and must include the following information:

(1) What information and circumstances rendered the order actually or potentially suspicious;

(2) What steps, if any, the registrant took to conduct due diligence;

(3) If the registrant conducted due diligence, what information it obtained during its investigation, and where the registrant concludes that each suspicious circumstance has been dispelled, the specific basis for each such conclusion; and

(4) Whether or not the registrant distributed controlled substances pursuant to the order.

DEA believes the registrants already maintain all records documenting each suspicious order and ORUSC. DEA believes these records, in the form of notations made in their internal order management systems, are already maintained for at least two years as part of their ordinary business operations, even if the registrant is able to dispel the suspicious circumstances. DEA estimates any additional costs associated with the recordkeeping requirements are minimal.

In conclusion, the rule includes clarification and codification of generally understood terms, codification of existing practices, and standardization of information submitted to the DEA (in terms of both method and content of submissions).

[120] *See* Section VI.A.2.c. titled ''Procedures for Identifying and Reporting Suspicious Orders of Controlled Substances,'' above.

[121] *See* Footnote 78, above.

[122] Ibid.

Furthermore, DEA estimates a cost savings of $2,666,000 from the use of the ARCOS Distributor Tool and $265,000 from the use of the centralized database for the reporting of suspicious orders. Therefore, DEA estimates a total cost savings of $2,931,000.

1. Affected Registrations

With the exception of reverse distributors, this rule affects all persons who are authorized to distribute controlled substances: Distributors, manufacturers, importers, practitioners, and NTPs. As of May 6, 2019, there were 1,731 registrations authorized to distribute as distributors, manufacturers, and importers: 873 distributor, 586 manufacturer, and 272 importer. Additionally, based on sampling of DEA Forms 222 received at DEA Field Division Offices pursuant to 21 CFR 1305.13(d), DEA estimates there are approximately 15,974 practitioner and NTP registrations engaged in distribution. Therefore, DEA estimates 17,705 total registrations are affected by this rule. Table 1 details the number of affected registrations by business activity.

TABLE 1—NUMBER OF DEA REGISTRATIONS AFFECTED BY BUSINESS ACTIVITY

Business activity	Number of registrations
Distributor	873
Manufacturer	586
Importer	272
Pharmacy	11,009
Hospital/Clinic	2,557
Teaching Institution	6
Practitioner	1,150
MLP	14
MLP-Ambulance Service	37
Researcher	45
Analytical Lab	32
Narcotic Treatment Program (NTP)	1,124
Total	17,705

Source: DEA, May 2019.

2. Number of Entities

It is common for DEA registrants to hold more than one registration, such as where a registrant handles controlled substances at multiple locations or engages in multiple types of DEA registered activities. However, RFA requirements and Small Business Administration (SBA) size standards are applicable to entities and businesses. DEA does not, in the general course of business, collect or otherwise maintain information regarding associated or parent organizations holding multiple registrations. Therefore, DEA needs some way of correlating and applying the parameters of the RFA and corresponding SBA size standards to DEA registrations (*i.e.,* develop a relationship between the number of registrations/establishments and the number of entities).

DEA estimated the number of entities represented by the number of DEA registrations by first determining which North American Industry Classification System (NAICS) classification codes most closely represent each of the affected business activities, and then researching economic data for those codes. The business activities and their corresponding representative NAICS codes are listed in table 2 below.

TABLE 2—BUSINESS ACTIVITIES AND REPRESENTATIVE NAICS CODES

Business activity	NAICS code	NAICS code-description
Distributor	424210	Drugs and Druggists' Sundries Merchant Wholesalers.
Manufacturer	325412	Pharmaceutical Preparation Manufacturing.
Importer	424210	Drugs and Druggists' Sundries Merchant Wholesalers.
Pharmacy	446110	Pharmacies and Drug Stores.
Hospital/Clinic	622110	General Medical and Surgical Hospitals.
Teaching Institution	611310	Colleges, Universities and Professional Schools.
Practitioner	621111	Offices of Physicians (except Mental Health Specialists).
MLP	621111	Offices of Physicians (except Mental Health Specialists).
MLP-Ambulance Service	621910	Ambulance Services.
Researcher	541712	Research and Development in the Physical, Engineering, and Life Sciences (except Biotechnology).
Analytical Lab	541380	Testing Laboratories.
NTP	621420	Outpatient Mental Health and Substance Abuse Centers.

The U.S. Census Bureau's Statistics of U.S. Businesses (SUSB) is an annual series that provides national and subnational data on the distribution of economic data by enterprise size and industry. Additionally, the SBA Office of Advocacy partially funds the U.S. Census Bureau to produce data on employer firm size in the SUSB program. SUSB employer data contain the number of firms, number of establishments, employment, and annual payroll for employment size of firm categories by location and industry. From the SUSB data, the number of firms and the number of establishments were noted and the firm-to-establishment ratio was calculated for each related NAICS code. For the purposes of this analysis, the term ''firm'' as defined in the SUSB is used interchangeably with ''entity'' as defined in the RFA. See table 3 below.[123]

[123] Two different data sources were used to develop Table 3. Data table directly from SUSB contained detailed firm size by number of employees, while the data table from the Advocacy contained detailed firm size by annual receipts. Therefore, for NAICS codes 325412, 424210, and 541712, which size determination is by the number of employees, the data set from SUSB is used—2015 SUSB Annual Datasets by Establishment Industry, table: ''U.S. & states, NAICS, detailed employment sizes (U.S., 6-digit and states, NAICS sectors), *https://www.census.gov/data/datasets/2015/econ/susb/2015-susb.html.*'' (Accessed July 3, 2019). For the remaining NAICS codes, which size determination is by annual receipts, the data set from the advocacy is used—SBA Office of Advocacy, Firm Size Data, U.S. static data, *https://www.sba.gov/advocacy/firm-size-data.* (Accessed July 3, 2019.)

TABLE 3—FIRM-TO-ESTABLISHMENT RATIO FOR EACH NAICS CODE

NAICS code	NAICS code-description	Firms	Establishments	Firm-to-establishment ratio
325412	Pharmaceutical Preparation Manufacturing	988	1,290	0.7659
424210	Drugs and Druggists' Sundries Merchant Wholesalers	6,812	10,129	0.6725
446110	Pharmacies and Drug Stores	18,852	43,343	0.4349
622110	General Medical and Surgical Hospitals	2,904	5,281	0.5499
611310	Colleges, Universities and Professional Schools	2,282	4,329	0.5271
621111	Offices of Physicians (except Mental Health Specialists)	174,901	210,721	0.8300
621910	Ambulance Services	3,390	5,051	0.6712
541712	Research and Development in the Physical, Engineering, and Life Sciences (except Biotechnology).	9,634	13,411	0.7184
541380	Testing Laboratories	5,191	6,599	0.7866
621420	Outpatient Mental Health and Substance Abuse Centers	4,987	9,685	0.5149

The calculated firm-to-establishment ratios were applied to the corresponding business activities to estimate the number of entities. For example, the firm-to-establishment ratio of 0.7659 is applied to the affected 586 manufacturer registrations for an estimated 449 entities, and the firm-to-establishment ratio of 0.6725 was applied to the affected 1,145 distributor and importer registrations for an estimated 770 distributor and importer entities. In total, the 17,705 affected registrations/establishments represent 9,043 entities. Table 4 below summarizes the number of entities for each business activity.

TABLE 4—NUMBER OF ENTITIES BY BUSINESS ACTIVITY

Business activity	NAICS code	Affected registration/establishments	Firm-to-establishment ratio	Affected firms
Manufacturer	325412	586	0.7659	449
Distributor, Importer	424210	1,145	0.6725	770
Pharmacy	446110	11,009	0.4349	4,788
Hospital/Clinic	622110	2,557	0.5499	1,406
Teaching Institution	611310	6	0.5271	3
Practitioner, MLP	621111	1,164	0.8300	966
MLP-Ambulance Service	621910	37	0.6712	25
Researcher	541712	45	0.7184	32
Analytical Lab	541380	32	0.7866	25
NTP	621420	1,124	0.5149	579
Total		17,705		9,043

3. Number of Small Entities

SUSB data includes the number of firms at various size ranges. To estimate the number of affected entities that are small entities, DEA compared the firm size ranges with SBA size standards for each of the representative NAICS codes from Table 2. The SBA size standard is the firm size based on the number of employees or annual receipts depending on industry.[124] If the entire size range for the firms in the SUSB data was below the SBA size standard, all of the firms in the SUSB data size range were considered ''small.'' If only part of the size range for the firms in the SUSB data was below the SBA size standard, only the proportional number of firms in the SUSB data size range was considered ''small.''

The number of firms below the SBA size standard for each NAICS code was added to determine the total number of small firms for that NAICS code. The number of small firms was divided by the total number of firms to estimate the ''percent small firms of total'' (*i.e.,* the percent of total firms that are small firms) for all firms in the related NAICS code. The percent small firms of total firms were applied to the estimated number of entities for each business activity to estimate the number of affected entities that are small entities. DEA estimates that 7,940 (87.8 percent) of the total 9,043 affected entities are small entities. The analysis is summarized in Table 5 below.

TABLE 5—NUMBER OF ENTITIES AND SMALL ENTITIES BY BUSINESS ACTIVITY

Business activity	Affected registration/establishments	Firm-to-establishment ratio	Affected firms	% Small entities	Affected small entities
Distributor, Importer	1,145	0.6725	770	96.2	741
Manufacturer	586	0.7659	449	93.2	419
Pharmacy	11,009	0.4349	4,788	98.0	4,694
Hospital/Clinic	2,557	0.5499	1,406	39.8	560

[124] ''U.S. Small Business Administration Table of Small Business Size Standards Matched to North American Industry Classification System Codes,'' October 1, 2017. *https://www.sba.gov/sites/default/files/files/Size_Standards_Table.pdf.*

TABLE 5—NUMBER OF ENTITIES AND SMALL ENTITIES BY BUSINESS ACTIVITY—Continued

Business activity	Affected registration/ establishments	Firm-to-establishment ratio	Affected firms	% Small entities	Affected small entities
Teaching Institution	6	0.5271	3	58.8	2
Practitioner, MLP	1,164	0.8300	966	97.2	939
MLP-Ambulance Service	37	0.6712	25	94.7	24
Researcher	45	0.7184	32	94.4	30
Analytical Lab	32	0.7866	25	94.1	24
NTP	1,124	0.5149	579	87.6	507
Total	17,705		9,043		7,940
Percent small entity of total entities					87.8%

4. Impact on Small Entities

To comply with the RFA, DEA conducted a preliminary analysis to determine whether, if promulgated, this rule will have a significant economic impact on a substantial number of small entities. As described above, DEA estimates this rule will result in a total cost savings of $2,931,000, or an average of $324 per entity ($2,931,000/9,043), including small entities. Average cost savings of $324 is a high estimate for small entities as small entities are expected to have lower volume of distribution and fewer times due diligence is conducted or suspicious order is reported to the centralized database.

The average cost savings of $324 per entity per year was compared to the average annual receipt for the smallest of small businesses in the NAICS codes that represent the affected entities (described in Table 2). For example, for NAICS code '424210-Drugs and Druggists' Sundries Merchant Wholesalers' the smallest size category is firm size with annual receipts ''less than $100,000.'' There are 585 firms in this size category with an estimated combined total of $31,248,000 for an average annual receipt of $53,415 per firm.[125] The $324 in annual cost savings per firm is 0.61 percent of $53,415. The results for each of the NAICS codes are listed in Table 6.

TABLE 6—COST SAVINGS AS PERCENT OF ANNUAL RECEIPTS BY NAICS CODES

NAICS code	NAICS code-description	Firm size in receipts ($)	Firms	Estimated receipts ($)	Average receipt per firm ($)	Average cost savings ($)	Cost savings as percent of annual receipts
325412	Pharmaceutical Preparation Manufacturing	* 100,000–499,000	91	35,834,000	393,780	324	0.08
424210	Drugs and Druggists' Sundries Merchant Wholesalers	<100,000	585	31,248,000	53,415	324	0.61
446110	Pharmacies and Drug Stores	<100,000	751	36,066,000	48,024	324	0.67
622110	General Medical and Surgical Hospitals	* 100,000–499,000	14	3,812,000	272,286	324	0.12
611310	Colleges, Universities and Professional Schools	<100,000	163	7,510,000	46,074	324	0.70
621111	Offices of Physicians (except Mental Health Specialists)	<100,000	15,275	771,280,000	50,493	324	0.64
621910	Ambulance Services	<100,000	373	16,468,000	44,150	324	0.73
541712	Research and Development in the Physical, Engineering, and Life Sciences (except Biotechnology)	<100,000	1,457	71,428,000	49,024	324	0.66
541380	Testing Laboratories	<100,000	738	35,527,000	48,140	324	0.67
621420	Outpatient Mental Health and Substance Abuse Centers	<100,000	800	41,204,000	51,505	324	0.63

* ''Estimated Receipts'' not available for the smallest size range of ''<100,000; therefore, used next size range of ''100,000–499,000'' for comparison.

DEA generally considers impacts that are greater than three percent of annual revenue to be a ''significant economic impact'' on an entity. As indicated in Table 6 above, the cost savings is far below the three percent threshold. Accordingly, DEA estimates that this rule will not, if promulgated, have a

[125] SBA Office of Advocacy, Firm Size Data, U.S. static data, *https://www.sba.gov/advocacy/firm-size-data.* (Accessed July 3, 2019.)

significant economic impact on a substantial number of small entities.

F. Unfunded Mandates Reform Act of 1995

This rule will not result in the expenditure by State, local and tribal governments, in the aggregate, or by the private sector, of $100,000,000 or more (adjusted for inflation) in any one year, and will not significantly or uniquely affect small governments. Therefore, no actions were deemed necessary under the provisions of the Unfunded Mandates Reform Act of 1995, 2 U.S.C. 1532.

G. Paperwork Reduction Act

Under the PRA,[126] the DEA is not authorized to impose a penalty on persons for violating information collection requirements which do not display a current OMB control number, if one is required. Copies of existing information collections approved by OMB may be obtained at *http://www.reginfo.gov/public/do/PRAMain.*

1. Collections of Information Associated With the Rule

Title: Reporting and Recordkeeping Requirements Related to Suspicious Orders.

OMB Control Number: 1117–New.

Form Number: N/A.

Pursuant to the PRA, the DEA is seeking approval from OMB for a new information collection related to suspicious orders. The collection would include two distinct components: The reporting of suspicious orders, and recordkeeping related to suspicious orders and ORUSCs. The rule applies to all registrants that distribute controlled substances, including manufacturers, distributors, importers, and pharmacies (and other practitioners in certain cases). The rule would amend two existing sections of DEA regulations,[127] and would create a new section of DEA regulations [128] to include provisions relating to suspicious orders.

a. Reporting of Suspicious Orders

Registrants must file suspicious order reports through the DEA centralized database.[129] Each suspicious order report must contain the following information:

- The DEA registration number of the registrant placing the order for controlled substances;
- The date the order was received;
- The DEA registration number of the registrant reporting the suspicious order;
- The National Drug Code number, unit, dosage strength, and quantity of the controlled substances ordered;
- The order form number for schedule I and schedule II controlled substances;
- The unique transaction identification number for the suspicious order; and
- What information and circumstances rendered the order actually suspicious.[130]

Currently, DEA is not able to accurately estimate the number of suspicious orders being reported because there is no central database tracking all of these orders. For the purpose of this analysis and fulfilling this new information collection requirement, DEA initially estimates the following number of respondents, responses, and burden. Burden estimates will be updated with actual figures on next information collection renewal request. DEA estimates there will be an average of 338,840 ORUSCs, of which approximately 20 percent are reported as suspicious orders. The suspicious order reports are made as they occur, with no set frequency, and have an estimated burden of 20 minutes per response. The 'number of respondents' is estimated based on the number of unique DEA numbers reporting to the centralized database; DEA does not have an estimate of the number of respondents reporting to the field offices. DEA estimates the following number of respondents and burden associated with this collection of information:

Number of respondents: 100.

Frequency of response: 677.78 per year (calculated).

Number of responses: 67,768 average per year.

Burden per response: 0.33 hour (20 minutes).

Total annual hour burden: 22,589 hours.

b. Recordkeeping for Suspicious Orders and ORUSCs

Registrants must keep records for suspicious orders and ORUSCs.[131] These records must be kept by the registrant and be available, for at least 2 years from the date of the record, for inspection and copying by authorized employees of DEA.[132] Each record must be prepared no later than seven calendar days after the suspicious order or ORUSC was received, must include how the registrant handled such orders, and must include the following information:

- What information and circumstances rendered the order actually or potentially suspicious;
- What steps, if any, the registrant took to investigate the order;
- If the registrant investigated the order, what information it obtained during its investigation, and where the registrant concludes that each suspicious circumstance has been dispelled, the specific basis for each such conclusion; and
- Whether or not the registrant distributed controlled substances pursuant to the order.[133]

Currently, DEA is not able to accurately estimate the number of suspicious orders or ORUSCs. For the purpose of this analysis and fulfilling this new information collection requirement, DEA initially estimates the following number of respondents, responses, and burden. Burden estimates will be updated with actual figures on next information collection renewal request. DEA estimates there will be an average of 338,840 ORUSCs, of which approximately 20 percent are reported as suspicious orders and the remaining 80 percent are ORUSCs that require keeping of the abovementioned records. The recordkeeping is conducted as the events occur, with no set frequency, and have an estimated burden of 15 minute per response. The 'number of respondents' is estimated based on the number of unique DEA numbers reporting to the centralized database; DEA does not have an estimate of the number of respondents reporting to the field offices. DEA estimates the following number of respondents and burden associated with this collection of information:

Number of respondents: 100.

Frequency of response: 2,710.72 per year (calculated).

Number of responses: 271,072 average per year.

Burden per response: 0.25 hour (15 minutes).

Total annual hour burden: 67,768 hours.

2. Request for Comments Regarding the Proposed Information Collections

Written comments and suggestions from the public and affected entities concerning the proposed collections of information are encouraged. Under the PRA, DEA is required to provide a notice regarding the proposed collections of information in the **Federal Register** with the notice of proposed

[126] 44 U.S.C. 3501 *et seq.*

[127] *Proposed amended* 21 CFR 1300.01 and *proposed amended* 21 CFR 1301.74.

[128] *Proposed new* 21 CFR 1301.78.

[129] *Proposed new* § 1301.78(b).

[130] *Proposed new* 21 CFR 1301.78(b).

[131] *Proposed new* 21 CFR 1301.78(c).

[132] 21 CFR 1304.04(a).

[133] *Proposed new* 21 CFR 1301.78(c).

rulemaking and solicit public comment.[134] The PRA requires DEA to solicit comment on the following issues:

- Whether the proposed collection of information is necessary for the proper performance of the functions of DEA, including whether the information shall have practical utility.
- The accuracy of DEA's estimate of the burden of the proposed collection of information, including the validity of the methodology and assumptions used.
- Recommendations to enhance the quality, utility, and clarity of the information to be collected.
- Recommendations to minimize the burden of the collection of information on those who are to respond, including through the use of automated collection techniques or other forms of information technology.

Please send written comments to the Office of Information and Regulatory Affairs, OMB, Attention: Desk Officer for DOJ, Washington, DC 20503. Please state that your comments refer to RIN 1117–AB47/Docket No. DEA–437. All comments must be submitted to OMB on or before January 4, 2021. The final rule will respond to any OMB or public comments on the information collection requirements contained in this proposal.

List of Subjects

21 CFR Part 1300

Chemicals, Drug traffic control.

21 CFR Part 1301Administrative practice and procedure, Drug traffic control, Exports, Imports, Security measures.

Administrative practice and procedure, Drug traffic control, Exports, Imports, Security measures.

For the reasons set forth above, the DEA proposes to amend 21 CFR parts 1300 and 1301 as follows:

PART 1300—DEFINITIONS

■ 1. The authority citation for part 1300 is revised to read as follows:

Authority: 21 U.S.C. 802, 821, 822, 823, 829, 832, 871(b), 951, 958(f).

■ 2. In § 1300.01, amend paragraph (b) by adding definitions of ''Due diligence,'' ''Order,'' ''Order received under suspicious circumstances,'' and ''Suspicious order'' in alphabetical order to read as follows:

§ 1300.01 Definitions relating to controlled substances.

* * * * *

(b) * * *

Due diligence means a reasonable and documented investigation into persons and orders (coupled with other appropriate investigations, including previous investigations into persons and orders) that includes, but is not limited to, verification that a person (or a person submitting an order) holds the appropriate DEA registration, verification that a person (or a person submitting an order) holds all licenses required by the state(s) in which a person (or a person submitting an order) conducts business with respect to controlled substances, examination of each suspicious circumstance surrounding an order, and examination of all facts and circumstances that may be relevant indicators of diversion in determining whether a person (or a person submitting an order) is engaged in, or is likely to engage in, the diversion of controlled substances.

* * * * *

Order means any communication by a person to a registrant proposing or requesting a distribution of a controlled substance, regardless of how it is labeled by the person or the registrant, and regardless of whether a distribution is made by the registrant, except that simple price/availability inquiries, standing alone, do not constitute an order.

Order received under suspicious circumstances means an order potentially meeting the definition of suspicious order.

* * * * *

Suspicious order includes, but is not limited to, an order of unusual size, an order deviating substantially from a normal pattern, or an order of unusual frequency.

* * * * *

PART 1301—REGISTRATION OF MANUFACTURERS, DISTRIBUTORS, AND DISPENSERS OF CONTROLLED SUBSTANCES

■ 3. The authority citation for part 1301 is revised to read as follows:

Authority: 21 U.S.C. 821, 822, 823, 824, 831, 832, 871(b), 875, 877, 886a, 951, 952, 953, 956, 957, 958, 965.

■ 4. In § 1301.74, revise the section heading and paragraph (b) to read as follows:

§ 1301.74 Other security controls for non-practitioners; non-practitioners and practitioners for orders received under suspicious circumstances; narcotic treatment programs and compounders for narcotic treatment programs.

* * * * *

(b)(1) Each registrant shall design and operate a system to identify suspicious orders of controlled substances for the registrant that complies with applicable Federal and State privacy laws. The system shall be designed and operated to identify orders of unusual size, orders deviating substantially from a normal pattern, and orders of unusual frequency. In addition, the system shall be designed and operated to identify suspicious orders based on facts and circumstances that may be relevant indicators of diversion in determining whether a person (or a person submitting an order) is engaged in, or is likely to engage in, the diversion of controlled substances.

(2) Registrants in receipt of an order received under suspicious circumstances shall follow the procedures set forth in § 1301.78(a).

(3) In addition to entities that are registered as distributors, the requirements in this paragraph (b) shall also apply to registrants authorized to distribute controlled substances. However, controlled substances dispensed or administered within the normal course of professional practice of a practitioner, to include prescriptions filled by a pharmacy, and orders placed by registrants to DEA registered reverse distributors requesting the return or destruction of controlled substances, are not distributions subject to the provisions of this part.

* * * * *

■ 5. Add § 1301.78 to read as follows:

§ 1301.78 Procedures for identifying and reporting suspicious orders of controlled substances.

(a) Upon receipt of an order received under suspicious circumstances, the registrant shall proceed under one of the following two options:

(1) The registrant shall decline to distribute pursuant to the suspicious order, immediately file a suspicious order report through the DEA centralized database (which includes the information described in paragraph (b) of this section), and maintain a record of the suspicious order and any due diligence related to the suspicious order (which includes at least the information described in paragraph (c) of this section); or

(2) The registrant, before distributing pursuant to the order received under suspicious circumstances, shall conduct due diligence to investigate each suspicious circumstance surrounding the order.

(i) If, through its due diligence, the registrant is able to dispel each suspicious circumstance surrounding the order received under suspicious circumstances within seven calendar days after receiving the order, it is not a suspicious order; the registrant may

[134] 44 U.S.C. 3506(c)(2).

then distribute pursuant to the order, and the order need not be reported to the DEA as a suspicious order, but the registrant must maintain a record of its due diligence which includes at least the information described in paragraph (c) of this section.

(ii) If the registrant, through its due diligence, is unable to dispel each suspicious circumstance surrounding the order received under suspicious circumstances within seven calendar days after receiving the order, it is a suspicious order; the registrant shall file a suspicious order report through the DEA centralized database, which includes the information described in paragraph (b) of this section, decline to distribute pursuant to the suspicious order, and maintain a record of its due diligence which includes at least the information described in paragraph (c) of this section.

(b)(1) Registrants shall report suspicious orders to the DEA centralized database. The report, identifying each suspicious order, must include the following information:

(i) The DEA registration number of the registrant placing the order for controlled substances;

(ii) The date the order was received;

(iii) The DEA registration number of the registrant reporting the suspicious order;

(iv) The National Drug Code number, unit, dosage strength, and quantity of the controlled substances ordered;

(v) The order form number for schedule I and schedule II controlled substances;

(vi) The unique transaction identification number for the suspicious order; and

(vii) What information and circumstances rendered the order actually suspicious.

(2) Upon notification from the DEA that a suspicious order report or reports contain inaccurate or incomplete information, the registrant shall have seven calendar days to correct the inaccurate or incomplete information.

(c) Registrants shall maintain a record of every suspicious order and every order received under suspicious circumstances for at least two years from the date of such record in accordance with 21 CFR 1304.04(a), and how the registrant handled such orders. The record must be prepared no later than seven calendar days after the suspicious order or order received under suspicious circumstances was received and must include the following information:

(1) What information and circumstances rendered the order actually or potentially suspicious;

(2) What steps, if any, the registrant took to conduct due diligence;

(3) If the registrant conducted due diligence, what information it obtained during its investigation, and where the registrant concludes that each suspicious circumstance has been dispelled, the specific basis for each such conclusion; and

(4) Whether or not the registrant distributed controlled substances pursuant to the order.

Timothy J. Shea,

Acting Administrator.

[FR Doc. 2020–21302 Filed 10–30–20; 8:45 am]

BILLING CODE 4410–09–P

DEPARTMENT OF HOMELAND SECURITY

Coast Guard

33 CFR Part 165

[Docket Number USCG–2020–0445]

RIN 1625–AA87

Security Zone; San Juan, Puerto Rico

AGENCY: Coast Guard, DHS.

ACTION: Notice of proposed rulemaking.

SUMMARY: The Coast Guard is proposing to revise an existing moving security zone for the Port of San Juan, San Juan, Puerto Rico. The proposed revision would expand the existing moving security zone to a 200-yard radius around all cruise ships entering, departing, or anchored in the Port of San Juan. While the cruise ships are moored at the Port of San Juan, the security zone would remain at a 50-yard radius around the cruise ships. This action would continue to prohibit persons and vessels from entering, anchoring, mooring or transiting in the security zone, unless authorized by the Coast Guard Captain of the Port of San Juan or a designated representative. This action is necessary to better meet the safety and security needs of the Port of San Juan. We invite your comments on this proposed rulemaking.

DATES: Comments and related material must be received by the Coast Guard on or before December 2, 2020.

ADDRESSES: You may submit comments identified by docket number USCG–2020–0445 using the Federal eRulemaking Portal at *https://www.regulations.gov.* See the ''Public Participation and Request for Comments'' portion of the **SUPPLEMENTARY INFORMATION** section for further instructions on submitting comments.

FOR FURTHER INFORMATION CONTACT: If you have questions about this proposed rulemaking, call or email Lieutenant Natallia Lopez, Sector San Juan Prevention Department, Waterways Management Division, U.S. Coast Guard; telephone 787–729–2380, email *Natallia.M.Lopez@uscg.mil.*

SUPPLEMENTARY INFORMATION:

I. Table of Abbreviations

CFR Code of Federal Regulations
COTP Captain of the Port
DHS Department of Homeland Security
FR Federal Register
NPRM Notice of proposed rulemaking
§ Section
U.S.C. United States Code

II. Background, Purpose, and Legal Basis

The existing regulation in 33 CFR 165.758 contains a moving security zone of 50-yards around all cruise ships entering, departing, moored or anchored in the Port of San Juan, Puerto Rico. On May 27, 2020, the Coast Guard received a request from Coast Guard Station San Juan to adjust the security zone to 200-yards to provide an adequate reaction zone for maritime security threats and hazards and to match similar security zones in other ports.

The purpose of this rulemaking is to ensure the safety and security of cruise ships in the Port of San Juan while they are entering, departing, moored, and anchored in port. The Coast Guard is proposing this rulemaking under authority in 46 U.S.C. 70034.

III. Discussion of Proposed Rule

The proposed rule wouldrevise the existing moving security zone in § 165.758 to a 200-yard radius around all cruise ships entering, departing, or anchored in the Port of San Juan, San Juan, Puerto Rico. Increasing the security zone from 50-yards to 200-yards while the cruise ships are in transit or anchored would provide law enforcement assets with more sufficient time to react in case of potential terrorist acts, sabotage, or other subversive acts, accidents, or hazards of a similar nature. While the cruise ships are moored, the security zone would remain at a 50-yard radius around the cruise ships. No vessel or person would be permitted to enter the security zone without obtaining permission from the COTP or a designated representative. The regulatory text we are proposing appears at the end of this document.

IV. Regulatory Analyses

We developed this proposed rule after considering numerous statutes and Executive orders related to rulemaking.

Below we summarize our analyses based on a number of these statutes and Executive orders, and we discuss First Amendment rights of protestors.

A. Regulatory Planning and Review

Executive Orders 12866 and 13563 direct agencies to assess the costs and benefits of available regulatory alternatives and, if regulation is necessary, to select regulatory approaches that maximize net benefits. Executive Order 13771 directs agencies to control regulatory costs through a budgeting process. This NPRM has not been designated a ''significant regulatory action,'' under Executive Order 12866. Accordingly, the NPRM has not been reviewed by the Office of Management and Budget (OMB), and pursuant to OMB guidance it is exempt from the requirements of Executive Order 13771.

This regulatory action determination is based on the size, available exceptions to the enforcement of the security zone, and notice to mariners. The regulated area will impact small designated areas of navigable channels within San Juan Harbor, San Juan, Puerto Rico. The rule will allow vessels to seek permission to enter, transit through, anchor in, or remain within the safety zone. Additionally, notifications to the marine community will be made through Local Notice to Mariners, Broadcast Notice to Mariners via VHF–FM marine channel 16, and on-scene representatives. The notifications will allow the public to plan operations around the affected areas.

B. Impact on Small Entities

The Regulatory Flexibility Act of 1980, 5 U.S.C. 601–612, as amended, requires Federal agencies to consider the potential impact of regulations on small entities during rulemaking. The term ''small entities'' comprises small businesses, not-for-profit organizations that are independently owned and operated and are not dominant in their fields, and governmental jurisdictions with populations of less than 50,000. The Coast Guard certifies under 5 U.S.C. 605(b) that this proposed rule would not have a significant economic impact on a substantial number of small entities.

While some owners or operators of vessels intending to transit the safety zone may be small entities, for the reasons stated in section IV.A above, this proposed rule would not have a significant economic impact on any vessel owner or operator.

If you think that your business, organization, or governmental jurisdiction qualifies as a small entity and that this rule would have a significant economic impact on it, please submit a comment (see **ADDRESSES**) explaining why you think it qualifies and how and to what degree this rule would economically affect it.

Under section 213(a) of the Small Business Regulatory Enforcement Fairness Act of 1996 (Pub. L. 104–121), we want to assist small entities in understanding this proposed rule. If the rule would affect your small business, organization, or governmental jurisdiction and you have questions concerning its provisions or options for compliance, please call or email the person listed in the **FOR FURTHER INFORMATION CONTACT** section. The Coast Guard will not retaliate against small entities that question or complain about this proposed rule or any policy or action of the Coast Guard.

C. Collection of Information

This proposed rule would not call for a new collection of information under the Paperwork Reduction Act of 1995 (44 U.S.C. 3501–3520).

D. Federalism and Indian Tribal Governments

A rule has implications for federalism under Executive Order 13132 (Federalism), if it has a substantial direct effect on the States, on the relationship between the National Government and the States, or on the distribution of power and responsibilities among the various levels of government. We have analyzed this proposed rule under that Order and have determined that it is consistent with the fundamental federalism principles and preemption requirements described in Executive Order 13132.

Also, this proposed rule does not have tribal implications under Executive Order 13175 (Consultation and Coordination with Indian Tribal Governments) because it would not have a substantial direct effect on one or more Indian tribes, on the relationship between the Federal Government and Indian tribes, or on the distribution of power and responsibilities between the Federal Government and Indian tribes. If you believe this proposed rule has implications for federalism or Indian tribes, please call or email the person listed in the **FOR FURTHER INFORMATION CONTACT** section.

E. Unfunded Mandates Reform Act

The Unfunded Mandates Reform Act of 1995 (2 U.S.C. 1531–1538) requires Federal agencies to assess the effects of their discretionary regulatory actions. In particular, the Act addresses actions that may result in the expenditure by a State, local, or tribal government, in the aggregate, or by the private sector of $100,000,000 (adjusted for inflation) or more in any one year. Though this proposed rule would not result in such an expenditure, we do discuss the effects of this rule elsewhere in this preamble.

F. Environment

We have analyzed this proposed rule under Department of Homeland Security Directive 023–01, Rev. 1, associated implementing instructions, and Environmental Planning COMDTINST 5090.1 (series), which guide the Coast Guard in complying with the National Environmental Policy Act of 1969 (42 U.S.C. 4321–4370f), and have made a preliminary determination that this action is one of a category of actions that do not individually or cumulatively have a significant effect on the human environment. This proposed rule involves a security zone that would establish a 200-yard radius around all cruise ships entering, departing, moored or anchored in the Port of San Juan, San Juan, Puerto Rico. While cruise ships are moored, the security zone would remain at a 50-yard radius around the cruise ships. Normally such actions are categorically excluded from further review under paragraph L60(a) in Table 3–1 of U.S. Coast Guard Environmental Planning Implementing Procedures. A preliminary Record of Environmental Consideration supporting this determination will be available in the docket where indicated under **ADDRESSES**. We seek any comments or information that may lead to the discovery of a significant environmental impact from this proposed rule.

G. Protest Activities

The Coast Guard respects the First Amendment rights of protesters. Protesters are asked to call or email the person listed in the **FOR FURTHER INFORMATION CONTACT** section to coordinate protest activities so that your message can be received without jeopardizing the safety or security of people, places, or vessels.

V. Public Participation and Request for Comments

We view public participation as essential to effective rulemaking, and will consider all comments and material received during the comment period. Your comment can help shape the outcome of this rulemaking. If you submit a comment, please include the docket number for this rulemaking, indicate the specific section of this document to which each comment applies, and provide a reason for each suggestion or recommendation.

We encourage you to submit comments through the Federal eRulemaking Portal at *https://www.regulations.gov.* If your material cannot be submitted using *https://www.regulations.gov,* call or email the person in the **FOR FURTHER INFORMATION CONTACT** section of this document for alternate instructions.

We accept anonymous comments. All comments received will be posted without change to *https://www.regulations.gov* and will include any personal information you have provided. For more about privacy and submissions in response to this document, see DHS's eRulemaking System of Records notice (85 FR 14226, March 11, 2020).

Documents mentioned in this NPRM as being available in the docket, and all public comments, will be in our online docket at *https://www.regulations.gov* and can be viewed by following that website's instructions. Additionally, if you go to the online docket and sign up for email alerts, you will be notified when comments are posted or a final rule is published.

List of Subjects in 33 CFR Part 165

Harbors, Marine safety, Navigation (water), Reporting and recordkeeping requirements, Security measures, Waterways.

For the reasons discussed in the preamble, the Coast Guard is proposing to amend 33 CFR part 165 as follows:

PART 165—REGULATED NAVIGATION AREAS AND LIMITED ACCESS AREAS

■ 1. The authority citation for part 165 continues to read as follows:

Authority: 46 U.S.C. 70034, 70051; 33 CFR 1.05–1, 6.04–1, 6.04–6, and 160.5; Department of Homeland Security Delegation No. 0170.1.

■ 2. Revise § 165.758 to read as follows:

§ 165.758 Security Zone; San Juan, Puerto Rico.

(a) *Regulated area.* A moving and fixed security zone is established in the following area:

(1) The waters within a 200-yard radius around all cruise ships entering, departing, or anchored in the Port of San Juan, Puerto Rico beginning one mile north of the Bahia de San Juan Lighted Buoy #3, in approximate position 18°28′17.8″N, 066°07′36.4″W and continuing until the vessel passes this buoy on its departure from the port. All coordinates are North American Datum 1983.

(2) The waters within a 50-yard radius around all cruise ships moored in the Port of San Juan, Puerto Rico.

(b) *Regulations.* (1) No person or vessel may enter, transit or remain in the security zone unless authorized by the Captain of the Port (COTP), San Juan, Puerto Rico, or a designated Coast Guard commissioned, warrant, or petty officer. Those operating in the security zone with the COTP's authorization must comply with all lawful orders or directions given to them by the COTP or his designated representative.

(2) Persons desiring to transit the area of the safety zones may contact the COTP San Juan or his designated representative to seek permission to transit the area. If permission is granted, all persons and vessels must comply with the instructions of the COTP or his designated representative.

(3) Vessels encountering emergencies, which require transit through the moving security zone, should contact the Coast Guard patrol craft or Duty Officer on VHF Channel 16. In the event of an emergency, the Coast Guard patrol craft may authorize a vessel to transit through the security zone with a Coast Guard designated escort.

(4) The Captain of the Port and the Duty Officer at Sector San Juan, Puerto Rico, can be contacted at telephone number 787–289–2041. The Coast Guard Patrol Commander enforcing the safety zone can be contacted on VHF–FM channels 16 and 22A.

(5) Coast Guard Sector San Juan will, when necessary and practicable, notify the maritime community of periods during which the security zones will be in effect by providing advance notice of scheduled arrivals and departure of cruise ships via a Marine Broadcast Notice to Mariners.

(6) All persons and vessels must comply with the instructions of on-scene patrol personnel. On-scene patrol personnel include commissioned, warrant, or petty officers of the U.S. Coast Guard. Coast Guard Auxiliary and local or state officials may be present to inform vessel operators of the requirements of this section, and other applicable laws.

(c) *Definition.* As used in this section, *cruise ship* means a passenger vessel greater than 100 feet in length that is authorized to carry more than 150 passengers for hire, except for a ferry.

Dated: October 23, 2020.

Gregory H. Magee,

Captain, U.S. Coast Guard, Captain of the Port San Juan.

[FR Doc. 2020–23884 Filed 10–30–20; 8:45 am]

BILLING CODE 9110–04–P

DEPARTMENT OF HOMELAND SECURITY

Coast Guard

33 CFR Part 165

[Docket Number USCG–2020–0307]

RIN 1625–AA00

Safety Zones; Christiansted Harbor, St. Croix, USVI

AGENCY: Coast Guard, DHS.

ACTION: Notice of proposed rulemaking.

SUMMARY: The Coast Guard is proposing to establish permanent safety zones for certain waters of the Christiansted Harbor, St. Croix, United States Virgin Islands when liquefied gas carriers are in transit to, moored, or aredeparting from the Virgin Island Water and Power Authority (WAPA) dock. This action is necessary to provide for the safety of life on these navigable waters near the WAPA dock. This proposed rulemaking would prohibit persons and vessels from being in the safety zones unless authorized by the Captain of the Port San Juan or a designated representative. We invite your comments on this proposed rulemaking.

DATES: Comments and related material must be received by the Coast Guard on or before December 2, 2020.

ADDRESSES: You may submit comments identified by docket number USCG–2020–0307 using the Federal eRulemaking Portal at *https://www.regulations.gov.* See the ''Public Participation and Request for Comments'' portion of the **SUPPLEMENTARY INFORMATION** section for further instructions on submitting comments.

FOR FURTHER INFORMATION CONTACT: If you have questions about this proposed rulemaking, call or email Lieutenant Natallia Lopez, Sector San Juan Prevention Department, Waterways Management Division, U.S. Coast Guard; telephone 787–729–2380, email *Natallia.M.Lopez@uscg.mil.*

SUPPLEMENTARY INFORMATION:

I. Table of Abbreviations

CFR Code of Federal Regulations
COTP Captain of the Port
DHS Department of Homeland Security
FR Federal Register
LG Liquefied Gas
NPRM Notice of proposed rulemaking
§ Section
U.S.C. United States Code

II. Background, Purpose, and Legal Basis

On May 28, 2020, Small Boat Station San Juan recommended Sector San Juan

establish permanent safety zones in Christiansted Harbor, St. Croix, United States Virgin Islands (USVI) because they routinely perform escorts of liquefied gas (LG) carriers. The Captain of the Port San Juan (COTP) has determined that potential hazards associated with the transit and cargo operation of LG carriers would be a safety concern for anyone within a one half mile of LG carriers during transit and 50-yards while LG carriers while moored at the Virgin Island Water and Power Authority (WAPA) dock.

The purpose of this rulemaking is to ensure the safety of vessels and the navigable waters during the escort and cargo operation of LG carriers. The Coast Guard is proposing this rulemaking under authority in 46 U.S.C. 70034.

III. Discussion of Proposed Rule

The COTP is proposing to establish permanent moving safety zones in Christiansted Harbor, St. Croix, USVI where Coast Guard assets routinely perform escorts of LG carriers. This proposed rule would establish a moving safety zone of one-half mile around any transiting LG carrier, beginning at Christiansted Harbor Lighted Buoy #1 and ending when the LG Carrier moors at the WAPA dock. Once moored there will be a 50-yard radius safety zone around the LG carrier. Additionally, a moving safety zone would be established on the waters around LG carriers departing Christiansted Harbor in an area one half mile around each vessel beginning at the Virgin Island Water and Power Authority (WAPA) dock when the vessel gets underway, and continuing until the stern passes the Christiansted Harbor Lighted Buoy #1. No vessel or person would be permitted to enter the safety zones without obtaining permission from the COTP or a designated representative. The regulatory text we are proposing appears at the end of this document.

IV. Regulatory Analyses

We developed this proposed rule after considering numerous statutes and Executive orders related to rulemaking. Below we summarize our analyses based on a number of these statutes and Executive orders, and we discuss First Amendment rights of protestors.

A. Regulatory Planning and Review

Executive Orders 12866 and 13563 direct agencies to assess the costs and benefits of available regulatory alternatives and, if regulation is necessary, to select regulatory approaches that maximize net benefits. Executive Order 13771 directs agencies to control regulatory costs through a budgeting process. This NPRM has not been designated a ''significant regulatory action,'' under Executive Order 12866. Accordingly, the NPRM has not been reviewed by the Office of Management and Budget (OMB), and pursuant to OMB guidance it is exempt from the requirements of Executive Order 13771.

This regulatory action determination is based on: 1) vessels may request permission from the COTP to enter, transit through, anchor in, or remain within the safety zones; 2) the impacts on routine navigation are expected to be minimal; and 3) notifications to the marine community will be made through Local Notice to Mariners, Broadcast Notice to Mariners via VHF–FM marine channel 16, and on-scene representatives. The notifications will allow the public to plan operations around the affected areas.

B. Impact on Small Entities

The Regulatory Flexibility Act of 1980, 5 U.S.C. 601–612, as amended, requires Federal agencies to consider the potential impact of regulations on small entities during rulemaking. The term ''small entities'' comprises small businesses, not-for-profit organizations that are independently owned and operated and are not dominant in their fields, and governmental jurisdictions with populations of less than 50,000. The Coast Guard certifies under 5 U.S.C. 605(b) that this proposed rule would not have a significant economic impact on a substantial number of small entities.

While some owners or operators of vessels intending to transit the safety zone may be small entities, for the reasons stated in section IV.A above, this proposed rule would not have a significant economic impact on any vessel owner or operator.

If you think that your business, organization, or governmental jurisdiction qualifies as a small entity and that this rule would have a significant economic impact on it, please submit a comment (see **ADDRESSES**) explaining why you think it qualifies and how and to what degree this rule would economically affect it.

Under section 213(a) of the Small Business Regulatory Enforcement Fairness Act of 1996 (Pub. L. 104–121), we want to assist small entities in understanding this proposed rule. If the rule would affect your small business, organization, or governmental jurisdiction and you have questions concerning its provisions or options for compliance, please call or email the person listed in the **FOR FURTHER INFORMATION CONTACT** section. The Coast Guard will not retaliate against small entities that question or complain about this proposed rule or any policy or action of the Coast Guard.

C. Collection of Information

This proposed rule would not call for a new collection of information under the Paperwork Reduction Act of 1995 (44 U.S.C. 3501–3520).

D. Federalism and Indian Tribal Governments

A rule has implications for federalism under Executive Order 13132 (Federalism), if it has a substantial direct effect on the States, on the relationship between the National Government and the States, or on the distribution of power and responsibilities among the various levels of government. We have analyzed this proposed rule under that Order and have determined that it is consistent with the fundamental federalism principles and preemption requirements described in Executive Order 13132.

Also, this proposed rule does not have tribal implications under Executive Order 13175 (Consultation and Coordination with Indian Tribal Governments) because it would not have a substantial direct effect on one or more Indian tribes, on the relationship between the Federal Government and Indian tribes, or on the distribution of power and responsibilities between the Federal Government and Indian tribes. If you believe this proposed rule has implications for federalism or Indian tribes, please call or email the person listed in the **FOR FURTHER INFORMATION CONTACT** section.

E. Unfunded Mandates Reform Act

The Unfunded Mandates Reform Act of 1995 (2 U.S.C. 1531–1538) requires Federal agencies to assess the effects of their discretionary regulatory actions. In particular, the Act addresses actions that may result in the expenditure by a State, local, or tribal government, in the aggregate, or by the private sector of $100,000,000 (adjusted for inflation) or more in any one year. Though this proposed rule would not result in such an expenditure, we do discuss the effects of this rule elsewhere in this preamble.

F. Environment

We have analyzed this proposed rule under Department of Homeland Security Directive 023–01, Rev. 1, associated implementing instructions, and Environmental Planning COMDTINST 5090.1 (series), which guide the Coast Guard in complying with the National Environmental Policy

Act of 1969 (42 U.S.C. 4321–4370f), and have made a preliminary determination that this action is one of a category of actions that do not individually or cumulatively have a significant effect on the human environment. This proposed rule involves This proposed rule involves a safety zone covering the transit and mooring of liquefied gas carriers that would prohibit entry within one half mile. Normally such actions are categorically excluded from further review under paragraph L60(a) of Appendix A, Table 1 of DHS Instruction Manual 023–01–001–01, Rev. 1. A preliminary Record of Environmental Consideration supporting this determination is available in the docket. For instructions on locating the docket, see the **ADDRESSES** section of this preamble. We seek any comments or information that may lead to the discovery of a significant environmental impact from this proposed rule.

G. Protest Activities

The Coast Guard respects the First Amendment rights of protesters. Protesters are asked to call or email the person listed in the **FOR FURTHER INFORMATION CONTACT** section to coordinate protest activities so that your message can be received without jeopardizing the safety or security of people, places, or vessels.

V. Public Participation and Request for Comments

We view public participation as essential to effective rulemaking, and will consider all comments and material received during the comment period. Your comment can help shape the outcome of this rulemaking. If you submit a comment, please include the docket number for this rulemaking, indicate the specific section of this document to which each comment applies, and provide a reason for each suggestion or recommendation.

We encourage you to submit comments through the Federal eRulemaking Portal at *https://www.regulations.gov.* If your material cannot be submitted using *https://www.regulations.gov,* call or email the person in the **FOR FURTHER INFORMATION CONTACT** section of this document for alternate instructions.

We accept anonymous comments. All comments received will be posted without change to *https://www.regulations.gov* and will include any personal information you have provided. For more about privacy and submissions in response to this document, see DHS's eRulemaking System of Records notice (85 FR 14226, March 11, 2020).

Documents mentioned in this NPRM as being available in the docket, and all public comments, will be in our online docket at *https://www.regulations.gov* and can be viewed by following that website's instructions. Additionally, if you go to the online docket and sign up for email alerts, you will be notified when comments are posted or a final rule is published.

We do not plan to hold public meetings on this rulemaking due to Novel Coronavirus (COVID–19) concerns.

List of Subjects in 33 CFR Part 165

Harbors, Marine safety, Navigation (water), Reporting and recordkeeping requirements, Security measures, Waterways.

For the reasons discussed in the preamble, the Coast Guard is proposing to amend 33 CFR part 165 as follows:

PART 165—REGULATED NAVIGATION AREAS AND LIMITED ACCESS AREAS

■ 1. The authority citation for part 165 continues to read as follows:

Authority: 46 U.S.C. 70034, 70051; 33 CFR 1.05–1, 6.04–1, 6.04–6, and 160.5; Department of Homeland Security Delegation No. 0170.1.

■ 2. Add § 165.789 to read as follows:

§ 165.789 Safety Zone; Christiansted Harbor, St. Croix, USVI.

(a) *Regulated area.*

(1) A moving safety zone is established on the the waters around liquefied gas carriers entering Christiansted Harbor in an area one half mile around each vessel, beginning one mile north of the Christiansted Harbor Lighted Buoy #1, in approximate position 17°46′48″ N, 064°41′48″ W, and continuing until the vessel is moored at the Virgin Island Water and Power Authority (WAPA) dock in approximate position 17°45′06″ N, 064°42′50″ W.

(2) The waters around liquefied gas carriers in a 50-yard radius around each vessel when moored at the Virgin Island Water and Power Authority (WAPA) dock.

(3) A moving safety zone is established on the waters around liquefied gas carriers departing Christiansted Harbor in an area one half mile around each vessel beginning at the Virgin Island Water and Power Authority (WAPA) dock in approximate position 17°45′06″ N, 064°42′50″ W when the vessel gets underway, and continuing until the stern passes the Christiansted Harbor Lighted Buoy #1, in approximate position 17°45′48″ N, 064°41′48″ W.

All coordinates are North American Datum 1983.

(b) *Regulations.*

(1) No person or vessel may enter, transit or remain in the safety zone unless authorized by the Captain of the Port, San Juan, Puerto Rico, or a designated Coast Guard commissioned, warrant, or petty officer. Those in safety zones must comply with all lawful orders or directions given to them by the COTP or the designated Coast Guard commissioned, warrant, or petty officer.

(2) Vessels encountering emergencies, which require transit through the safety zones, should contact the Coast Guard patrol craft or Duty Officer on VHF Channel 16. In the event of an emergency, the Coast Guard patrol craft may authorize a vessel to transit through the safety zones with a Coast Guard designated escort.

(3) The Captain of the Port and the Duty Officer at Sector San Juan, Puerto Rico, can be contacted at telephone number 787–289–2041. The Coast Guard Patrol Commander enforcing the safety zones can be contacted on VHF–FM channels 16 and 22A.

(4) Coast Guard Sector San Juan will notify the marine community of periods during which these safety zones will be in effect by providing notice to mariners in accordance with 33 CFR 165.7.

(5) All persons and vessels must comply with the instructions of on-scene patrol personnel. On-scene patrol personnel include commissioned, warrant, or petty officers of the U.S. Coast Guard. Coast Guard Auxiliary and local or state officials may be present to inform vessel operators of the requirements of this section, and other applicable laws.

Dated: October 23, 2020.

Gregory H. Magee,

Captain, U.S. Coast Guard, Captain of the Port San Juan.

[FR Doc. 2020–23886 Filed 10–30–20; 8:45 am]

BILLING CODE 9110–04–P

DEPARTMENT OF AGRICULTURE

Forest Service

36 CFR Part 222

RIN 0596–AD45

Assessing Fees for Excess and Unauthorized Grazing

AGENCY: Forest Service, USDA.

ACTION: Notice of proposed rulemaking.

SUMMARY: The U.S. Department of Agriculture, Forest Service (Agency), is

proposing to amend its existing regulations to provide for nonmonetary settlement when excess or unauthorized grazing is determined to be non-willful, a standard consistent with practices of the Bureau of Land Management, as recommended by the July 2016 Government Accountability Office (GAO) in its report to the Committee on Natural Resources, House of Representatives, *Unauthorized Grazing, Actions Needed to Improve Tracking and Deterrence Efforts* (GAO–16–559).

DATES: To be ensured consideration, comments must be received in writing on or before December 2, 2020.

ADDRESSES: You may send comments using one of the following methods:

1. Submit comments electronically by following the instructions at the Federal eRulemaking portal at *http://www.regulations.gov.*

2. *Mail:* U. S. Forest Service, Director, Forest Management, Range Management and Vegetation Ecology, 201 14th Street SW, Suite 3SE, Washington, DC 20250–1124.

3. *Hand Delivery/Courier:* U. S. Forest Service, Director, Forest Management, Range Management and Vegetation Ecology, 201 14th Street SW, Suite 3SE, Washington, DC 20250–1124.

All comments, including all content, will be placed in the record and will be available for public inspection and copying. Therefore, the Agency recommends that commenters remove personal information such as Social Security Numbers, personal addresses, telephone numbers, and email addresses included in their comments as such information may become easily available to the public.

Also, please note that, due to security concerns, postal mail delivery in Washington, DC may be delayed. Therefore, the Agency encourages the public to submit comments electronically.

FOR FURTHER INFORMATION CONTACT: Myra Black, Program Manager, Forest Management, Range Management and Vegetation Ecology, 202–650–7365, *myra.black@usda.gov.* Individuals who use telecommunication devices for the deaf may call the Federal Relay Service at 800–877–8339 between 8:00 a.m. and 8:00 p.m., Eastern Standard Time, Monday through Friday.

SUPPLEMENTARY INFORMATION:

Background

The Forest Service is responsible for managing National Forest System (NFS) lands that provide forage for domestic livestock grazing. The Forest Service's authority to regulate livestock grazing comes from the Organic Administration Act of 1897, which named grazing as an early use of lands administered by the Forest Service. The Forest Service managed grazing under its general authorities until 1950, when Congress enacted the Granger-Thye Act, specifically authorizing the Secretary of Agriculture to issue grazing permits on NFS lands and other lands administered by the U.S Department of Agriculture. The Forest Service permits the occupancy and use of NFS lands by domestic livestock through Term Grazing Permits pursuant to 36 CFR 222.3. The regulations at 36 CFR 222.50(a) require the Agency to charge fees ''for all grazing or livestock use of National Forest System lands, or other lands under Forest Service control.''

Congress asked the Government Accountability Office (GAO) to examine what is known about the frequency and extent of unauthorized grazing on federal lands, and its effects, as well as review the Bureau of Land Management's (BLM) and Forest Service's efforts to detect, deter, and resolve unauthorized grazing. Excess use is when livestock stray outside of their permitted area and graze in an unauthorized area or a permittee intentionally overstays the permitted grazing period. Unauthorized use is when livestock, owned or controlled by a non-permittee, graze on National Forest System lands. In July 2016, GAO issued a Report to the Committee on Natural Resources, House of Representatives, *Unauthorized Grazing, Actions Needed to Improve Tracking and Deterrence Efforts* (GAO–16–559). The Report recommended that the Forest Service amend its regulations on range management (36 CFR part 222) to provide an option for nonmonetary settlement when unauthorized or excess grazing is non-willful, in addition to the option of following its existing regulations at 36 CFR 222.50(a) and (h). The GAO report also recommended that the Forest Service record all incidents of unauthorized grazing, including those resolved informally. The Agency will develop direction for implementing the latter recommendation in the Forest Service Manual and Handbook for Rangeland Management at a later date.

Need for Proposed Rule

The GAO found that the frequency and extent of unauthorized grazing on NFS lands is largely unknown because, according to Agency officials, the Agency handles most incidents informally (*e.g.,* with a telephone call) and does not document them. The incidents that were recorded involved formal action taken by the Agency rangeland management program or law enforcement staff., such as issuance of a Notice of Non-Compliance and/or a Bill for Collection.

The proposed rule provides the flexibility to resolve incidents informally without charging unauthorized grazing penalties, while retaining the option for monetary relief for willful excess or unauthorized grazing. Informal resolution involves the permittee or non-permittee removing the livestock following a phone call from or face-to-face conversation with the authorized officer. The incident should be noted in the files as non-willful, and the settlement would be considered nonmonetary as no Bill for Collection would be issued.

Informal resolution, such as a phone call or face-to-face conversation, is an effective way to resolve non-willful unauthorized grazing. Amending the Agency's grazing regulations to provide for the informal resolution and nonmonetary settlement of infractions allows the Agency to achieve the objective of effectively and efficiently resolving such incidents, and it effectively addresses one of GAO's recommendations.

Discussion of Proposed Regulatory Revisions

Section 36 CFR 222.50 of the current grazing regulations describes the general procedures for charging grazing fees for all livestock grazing or livestock use of National Forest System lands. Specifically, section 222.50(h) describes the unauthorized use rate and how it applies to: excess number of livestock grazing by permittees; livestock grazed outside the permitted grazing season; or livestock grazed under an unvalidated permit.

The Forest Service proposes to amend 36 CFR 222 subpart C, to allow the authorized officer to approve nonmonetary settlement for excess or unauthorized grazing use when the use is non-willful. The authorized officer may approve non-monetary settlement for excess or unauthorized grazing use only when certain conditions set forth in the regulation are met.

The proposed language is consistent with the language used by BLM to describe non-willful grazing use. In order to ensure that the proposed language is clear, the Forest Service proposes to add the definition of non-permittee and non-willful to the definitions section found at 36 CFR 222.1(b). In addition, the definitions section is restated to remove numbering, consistent with the **Federal Register** Document Drafting Handbook (August 2018 Edition, Revision 1.1 dated August

9, 2019; National Archives and Records Administration).

The proposed language removes reference to the fee being adjusted by the same indexes used to adjust the regular fee since the first sentence already describes that the rate is determined by establishing a base value. In addition, the current rule language refers to an unvalidated permit, which describes a new permit's status prior to being validated. Validation occurs by stocking the allotment for the first time with at least ninety percent of the permitted livestock during the first season of grazing use under the new permit. The proposed language removes the reference to an unvalidated permit and replaces it with the four most common situations in which the Forest Service encounters excess or unauthorized use. Those examples of excess and unauthorized use include but are not limited to: excess number of livestock grazed; livestock grazed outside the permitted grazing season; livestock grazed in areas not authorized under a grazing permit and bill for collection; or livestock grazed without a permit.

Regulatory Certifications

Executive Order 12866

Executive Order (E.O.) 12866 provides that the Office of Information and Regulatory Affairs (OIRA) in the Office of Management and Budget will review all significant rules. OIRA has determined that this proposed rule is not significant.

Executive Order 13771

This proposed rule has been reviewed in accordance with E.O. 13771 on reducing regulation and controlling regulatory costs and has been designated as an ''other action'' for purposes of the E.O.

Civil Rights Impact Analysis

A Civil Rights Impact Analysis (CRIA) was conducted in accordance with USDA Departmental Regulation (DR) 4300–4, to determine if implementation of the proposed rules (and accompanying rangeland management directives) would have disproportionate effects or adverse impacts on employees or program beneficiaries, because of membership in protected groups identified in USDA DR 4300–4 and DR 5600–002, particularly women, ethnic and racial minorities, and people with disabilities. The proposed rules and directives have been analyzed to ensure compliance with USDA's DR 4300–4, and it is determined that no adverse impacts on protected groups are expected as a result of implementation of the proposed rules or directives.

Congressional Review Act

Pursuant to the Congressional Review Act (5 U.S.C. 801 *et seq.*), OIRA has designated this proposed rule as not a major rule as defined by 5 U.S.C. 804(2).

National Environmental Policy Act

The proposed rule would allow an authorized officer to determine that a nonmonetary settlement is appropriate when excess or unauthorized livestock use was non-willful on behalf of the permittee or non-permittee and add clarity to what the agency means by the term non-willful. Agency regulations at 36 CFR 220.6(d)(2) (73 FR 43093) exclude from documentation in an environmental assessment or environmental impact statement, as well as in a decision memo, rules, regulations, or policies to establish Service-wide administrative procedures, program processes, or instructions. The revisions to § 222.50(h) and § 222.1(b) address the penalty for non-willful actions taken on National Forest System land and provide a definition for a term used in the revised language. The proposed language removes reference to an unvalidated permit and replaces it with the four most common situations that the Forest Service considers excess or unauthorized use, which is not intended to be an exclusive list. As the regulation is limited to determination of waiver of excess or unauthorized use fees (nonmonetary settlement), no ground disturbing activities are implicated by these revisions. Thus, the Agency has concluded that the proposed rule falls within this category of actions and that no extraordinary circumstances exist which would require preparation of an environmental assessment or environmental impact statement.

Regulatory Flexibility Act Analysis

The Agency has considered the impacts of the proposed rule on small entities consistent with the requirements of the Regulatory Flexibility Act (5 U.S.C. 601 *et seq.*) as amended by the Small Business Regulatory Flexibility Enforcement Fairness Act of 1996 (SBREFA), and Executive Orders 13272 (Proper Consideration of Small Entities in Agency Rulemaking). This proposed rule would not have any direct effect on small entities as defined by the Regulatory Flexibility Act. The proposed rule would not impose recordkeeping requirements on small entities; would not affect their competitive position in relation to large entities; and would not affect their cash flow, liquidity, or ability to remain in the market. Additionally, it reduces the administrative burden on livestock operators by allowing for informal nonmonetary resolution of a situation that would typically require an administrative process to resolve. Therefore, the Forest Service has determined that this proposed rule would not have a significant economic impact on a substantial number of small entities pursuant to the Regulatory Flexibility Act.

Federalism

The Agency has considered the proposed rule under the requirements of E.O. 13132, *Federalism.* The Agency has determined that the proposed rule conforms with the federalism principles set out in this executive order; would not impose any compliance costs on the states; and would not have substantial direct effects on the states, on the relationship between the Federal government and the states, or on the distribution of power and responsibilities among the various levels of government. Therefore, the Agency has concluded that the proposed rule does not have Federalism implications.

Consultation With Tribal Governments

In accordance with Executive Order 13175, the Agency is conducting Tribal consultation for the proposed rule. To ensure tribal perspectives are heard and fully considered during rulemaking, the Agency contacted all federally recognized Indian tribes and Alaska Native corporations in accordance with E.O. 13175, (Consultation and Coordination with Indian Tribal Governments); USDA Departmental Regulation 1350–02 (Tribal Consultation, Coordination and Collaboration); and Forest Service Handbook 1509.13, Chapter 10 (Consultation with Indian Tribes and Alaska Native Corporations). The Agency initiated formal consultation on the rulemaking by contacting the Indian tribes and Alaska Native Corporations by mail.

No Takings Implications

The Agency has analyzed the proposed rule in accordance with the principles and criteria in E.O. 12630, *Governmental Actions and Interference with Constitutionally Protected Property Rights.* The Agency has determined that the proposed rule would not pose the risk of a taking of private property.

Energy Effects

The Agency has reviewed the proposed rule under E.O. 13211, *Actions Concerning Regulations That Significantly Affect Energy Supply, Distribution, or Use.* The Agency has determined that the proposed rule would not constitute a significant energy action as defined in E.O. 13211.

Civil Justice Reform

The Forest Service has analyzed the proposed rule in accordance with the principles and criteria in E.O. 12988, *Civil Justice Reform.* The Agency has not identified any State or local laws or regulations that conflict with this regulation or that would impede full implementation of this rule. Nevertheless, if such conflicts were to be identified, the proposed rule, if implemented, will preempt the State or local laws or regulations that are found to be in conflict. However, in that case of a conflict, (1) no retroactive effect will be given to this final rule; and (2) USDA will not require the use of administrative proceedings before parties could file suit in court challenging its provisions.

Unfunded Mandates

Pursuant to Title II of the Unfunded Mandates Reform Act of 1995 (2 U.S.C. 1531–1538), signed into law on March 22, 1995, the Agency has assessed the effects of the proposed rule on state, local, and Tribal governments and the private sector. The proposed rule would not compel the expenditure of $100 million or more by any state, local, or Tribal government or anyone in the private sector. Therefore, a statement under section 202 of the Act is not required.

Controlling Paperwork Burdens on the Public

The proposed rule does not contain any recordkeeping or reporting requirements or other information collection requirements as defined in 5 CFR part 1320 that are not already required by law or not already approved for use. Accordingly, the review provisions of the Paperwork Reduction Act of 1995 (44 U.S.C. 3501 *et seq.*) and its implementing regulations at 5 CFR part 1320 do not apply.

List of Subjects in 36 CFR Part 222

Grazing and Livestock Use on the National Forest System, Mediation of Term Grazing Permit Disputes, Grazing Fees, Management of Wild Free-Roaming Horses and Burros.

For the reasons discussed in the preamble, the Forest Service proposes to amend part 222, subparts A and C, of Title 36 of the Code of Federal Regulations as follows:

PART 222—RANGE MANAGEMENT

Subpart A—Grazing and Livestock Use on the National Forest System

■ 1. The authority citation for part 222, subpart A, continues to read as follows:

Authority: 92 Stat. 1803, as amended (43 U.S.C. 1901), 85 Stat. 649, as amended (16 U.S.C. 1331–1340); sec. 1, 30 Stat. 35, as amended (18 U.S.C. 551); sec. 32, 50 Stat. 522, as amended (7 U.S.C. 1011).

■ 2. In § 222.1(b), revise paragraph (b) to to read as follows:

§ 222.1 Authority and definitions.

* * * * *

(b) *Definitions.*

Allotment means a designated area of land available for livestock grazing.

Allotment management plan means a document that specifies the program of action designated to reach a given set of objectives. It is prepared in consultation with the permittee(s) involved and:

(i) Prescribes the manner in and extent to which livestock operations will be conducted in order to meet the multiple-use, sustained yield, economic, and other needs and objectives as determined for the lands, involved; and

(ii) Describes the type, location, ownership, and general specifications for the range improvements in place or to be installed and maintained on the lands to meet the livestock grazing and other objectives of land management; and

(iii) Contains such other provisions relating to livestock grazing and other objectives as may be prescribed by the Chief, Forest Service, consistent with applicable law.

Base property means land and improvements owned and used by the permittee for a farm or ranch operation and specifically designated by him to qualify for a term grazing permit.

Cancel means action taken to permanently invalidate a term grazing permit in whole or in part.

Grazing permit means any document authorizing livestock to use National Forest System or other lands under Forest Service control for the purpose of livestock production including:

(i) *Temporary grazing permits* for grazing livestock temporarily and without priority for reissuance.

(ii) *Term permits* for up to 10 years with priority for renewal at the end of the term.

Land subject to commercial livestock grazing means National Forest System lands within established allotments.

Lands within the National Forest in the 16 contiguous western States means lands designated as National Forest within the boundaries of Arizona, California, Colorado, Idaho, Kansas, Montana, Nebraska, Nevada, New Mexico, North Dakota, Oklahoma, Oregon, South Dakota, Utah, Washington, and Wyoming (National Grasslands are excluded).

Livestock means animals of any kind kept or raised for use or pleasure.

Livestock use permit means a permit issued for not to exceed one year where the primary use is for other than grazing livestock.

Modify means to revise the terms and conditions of an issued permit.

National Forest System lands means the National Forests, National Grasslands, Land Utilization Projects, and other Federal lands for which the Forest Service has administrative jurisdiction.

Non-permittee means a person who owns or controls livestock and does not have a grazing permit to graze livestock on National Forest System lands.

Non-willful means an action which is inadvertent or accidental, and not due to gross negligence.

On-and-off grazing permits means permits with specific provisions on range only part of which is National Forest System lands or other lands under Forest Service control.

On-the-ground expenditure means payment of direct project costs of implementing an improvement or development, such as survey and design, equipment, labor and material (or contract) costs, and on-the-ground supervision.

Other lands under Forest Service control means non-Federal public and private lands over which the Forest Service has been given control through lease, agreement, waiver, or otherwise.

Permittee means any person who has been issued a grazing permit.

Permitted livestock means livestock authorized by a written permit.

Person means any individual, partnership, corporation, association, organization, or other private entity, but does not include Government Agencies.

Private land grazing permits means permits issued to persons who control grazing lands adjacent to National Forest System lands and who waive exclusive grazing use of these lands to the United States for the full period the permit is to be issued.

Range betterment means rehabilitation, protection and improvement of National Forest System lands to arrest range deterioration and improve forage conditions, fish and

wildlife habitat, watershed protection, and livestock production.

Range betterment fund means the fund established by title IV, section 401(b)(1), of the Federal Land Policy and Management Act of 1976. This consists of 50 percent of all monies received by the United States as fees for grazing livestock on the National Forests in the 16 contiguous western States.

Range Improvement means any activity or program designed to improve production of forage and includes facilities or treatments constructed or installed for the purpose of improving the range resource or the management of livestock and includes the following types:

(i) Non-structural which are practices and treatments undertaken to improve range not involving construction of improvements.

(ii) Structural which are improvements requiring construction or installation undertaken to improve the range or to facilitate management or to control distribution and movement of livestock.

(A) Permanent means range improvements installed or constructed and become a part of the land such as: Dams, ponds, pipelines, wells, fences, trails, seeding, etc.

(B) Temporary means short-lived or portable improvements that can be removed such as: Troughs, pumps and electric fences, including improvements at authorized places of habitation such as line camps.

Suspend means temporary withholding of a term grazing permit privilege, in whole or in part.

Term period means the period for which term permits are issued, the maximum of which is 10 years.

Transportation livestock means livestock used as pack and saddle stock for travel on the National Forest System.

* * * * *

Subpart C—Grazing Fees

■ 3 The authority citation for part 222, subpart C, continues to read as follows:

Authority: 16 U.S.C. 551; 31 U.S.C. 9701; 43 U.S.C. 1751, 1752, 1901; E.O. 12548 (51 FR 5985).

■ 4. In § 222.50, revise paragraph (h) to read as follows:

§ 222.50 General Procedures

* * * * *

(h) The excess and unauthorized grazing use rate will be determined by establishing a base value without giving consideration for those contributions normally made by the permittee under terms of the grazing permit. This rate is charged for unauthorized forage or forage in excess of authorized use and is separate from any penalties that may be assessed for a violation of a prohibition issued under 36 CFR part 261 or from an administrative permit action. This rate will apply, but not be limited to the following circumstances: Excess number of livestock grazed; livestock grazed outside the permitted grazing season; livestock grazed in areas not authorized under a grazing permit and a bill for collection; or livestock grazed without a permit. The authorized officer may approve nonmonetary settlement for excess or unauthorized grazing use only when all of the following conditions are satisfied:

(1) The excess or unauthorized use was non-willful on behalf of the permittee or non-permittee;

(2) The forage consumed by the excess or unauthorized use is not significant;

(3) National Forest System lands have not been damaged significantly by the excess or unauthorized use; and

(4) Nonmonetary settlement is in the interest of the United States.

* * * * *

Angela Coleman,

Acting Associate Chief, USDA Forest Service.

[FR Doc. 2020–24164 Filed 10–30–20; 8:45 am]

BILLING CODE 3411–15–P

ENVIRONMENTAL PROTECTION AGENCY

40 CFR Part 152

[EPA–HQ–OPP–2019–0701; FRL–10009–24]

RIN 2070–AK56

Pesticides; Proposal To Add Chitosan to the List of Active Ingredients Permitted in Exempted Minimum Risk Pesticide Products

AGENCY: Environmental Protection Agency (EPA).

ACTION: Proposed rule.

SUMMARY: The Environmental Protection Agency (EPA) is proposing to add the substance commonly referred to as chitosan (also known by its chemical name: poly-D-glucosamine) (CAS Reg. No. 9012–76–4) to the list of active ingredients allowed in minimum risk pesticide products exempt from registration and other requirements of the Federal Insecticide, Fungicide, and Rodenticide Act (FIFRA). Tidal Vision Products, LLC submitted a petition to EPA requesting that chitosan be added to both the lists of active and inert ingredients allowed in exempted minimum risk pesticide products. At this time, EPA is deferring a decision on whether to add chitosan to the list of allowable inert ingredients.

DATES: Comments must be received on or before January 4, 2021.

ADDRESSES: Submit your comments, identified by the docket identification (ID) number EPA–HQ–OPP–2019–0701, through the Federal eRulemaking Portal at *http://www.regulations.gov.* Follow the online instructions for submitting comments. Do not submit electronically any information you consider to be Confidential Business Information (CBI) or other information whose disclosure is restricted by statute.

Additional instructions on commenting or visiting the docket, along with more information about dockets generally, is available at *http://www.epa.gov/dockets.*

Please note that due to the public health emergency the EPA Docket Center (EPA/DC) and Reading Room was closed to public visitors on March 31, 2020. Our EPA/DC staff will continue to provide customer service via email, phone, and webform. For further information on EPA/DC services, docket contact information and the current status of the EPA/DC and Reading Room, please visit *https://www.epa.gov/dockets.*

FOR FURTHER INFORMATION CONTACT: Anne Overstreet, Deputy Director, Biopesticides and Pollution Prevention Division (7511P), Office of Pesticide Programs, Environmental Protection Agency, 1200 Pennsylvania Ave. NW, Washington, DC 20460–0001; main telephone number: (703) 305–7090; email address: *BPPDFRNotices@epa.gov.*

SUPPLEMENTARY INFORMATION:

I. Executive Summary

A. Does this action apply to me?

You may be potentially affected by this action if you manufacture, distribute, sell, or use minimum risk pesticide products. Minimum risk pesticide products are exempt from registration and other FIFRA requirements and are described in 40 CFR 152.25(f). The following list of North American Industrial Classification System (NAICS) codes is not intended to be exhaustive, but rather provides a guide to help readers determine whether this document applies to them. Potentially affected entities may include:

- Pesticide and other agricultural chemical manufacturers (NAICS codes 325320 and 325311), as well as other manufacturers in similar industries such as animal feed (NAICS code 311119), cosmetics (NAICS code 325620), and

soap and detergents (NAICS code 325611).

- Manufacturers who may also be distributors of these products, including farm supplies merchant wholesalers (NAICS code 424910), drug and druggists merchant wholesalers (NAICS code 424210.
- Retailers of minimum risk pesticide products (some of who may also be manufacturers), including nursery, garden center, and farm supply stores (NAICS code 444220); outdoor power equipment stores (NAICS code 444210); and supermarkets (NAICS code 445110).
- Users of minimum risk pesticide products, including the public in general, exterminating and pest control services (NAICS code 561710), landscaping services (NAICS code 561730), sports and recreation institutions (NAICS code 611620), and child daycare services (NAICS code 624410). Many of these entities also manufacture minimum risk pesticide products.

B. What action is the Agency taking?

EPA is proposing to add the substance commonly referred to as chitosan (also known by its chemical name poly-D-glucosamine) (CAS Reg. No. 9012–76–4) to the list of active ingredients allowed in minimum risk pesticide products exempt from registration and other requirements of the Federal Insecticide, Fungicide, and Rodenticide Act (FIFRA), 7 U.S.C. 136 *et seq.*

C. What is EPA's authority for taking this action?

This action is issued under the authority of FIFRA, 7 U.S.C. 136 *et seq.,* particularly FIFRA sections 3 and 25.

D. Why is EPA taking this action?

EPA may exempt from the requirements of FIFRA any pesticide that is ''. . . of a character which is unnecessary to be subject to [FIFRA]'' (FIFRA section 25(b). Pursuant to this authority, EPA has exempted from the pesticide registration and requirements of FIFRA certain pesticide products if they are composed of specified ingredients (recognized active and inert substances which are listed in the regulations (40 CFR part 152)) and labeled according to EPA's regulations in 40 CFR 152.25(f). EPA created the exemption for minimum risk pesticides to eliminate the need for the Agency to expend significant resources to regulate products that were deemed to be of minimum risk to human health and the environment.

E. What are the estimated incremental impacts of the proposal?

EPA has evaluated the potential incremental impacts of this proposed exemption in the document entitled ''Cost Analysis of the Proposed Modification to the Minimum Risk Pesticide Listing Program. Prepared by Biological and Economic Analysis Division, Office of Pesticide Programs'' (Ref. 1), which is available in the docket and is briefly summarized here.

Without this exemption, the petitioner would be required to register the chitosan product(s) as a pesticide under FIFRA. This could entail generating supporting data, incurring submission costs, and paying registration fees. In addition, the petitioner could incur annual maintenance fees on the registrations. EPA estimates the cost savings of listing chitosan as an active ingredient that can be used in minimum risk pesticide products under 40 CFR 152.25(f) to be between $53,000 and $116,000 initially and about $3,400 per year thereafter for each pesticide product registered containing chitosan as explained in the following paragraph.

EPA has previously estimated the costs of guideline studies (Ref. 2) and registration fees (Ref. 3) are available on EPA's website. EPA estimates the cost of submitting an application for a product registration to be about $1,300 (Ref. 4). For a new product, data generation costs could be as much as $109,000 and fees would be $5,363; including submission costs, the petitioner could avoid registration costs of nearly $116,000. For products that are substantially similar to existing registered products, data generation costs could be around $51,000 with fees of $1,342; including submission costs, the petitioner could avoid registration costs of about $53,000. (Ref. 1). Tidal Vision Products, LLC, indicated in its petition that it plans to register six chitosan pesticide products. Assuming the six products meet all the criteria for exemption (exempt products must only contain substance listed in 40 CFR 152.25(f), list all ingredients on the label, and may not make any claims to control public health pests), EPA estimates the total savings to be between $318,000 and $696,000 initially and about $20,000 per year thereafter in maintenance fees. There may be additional savings if production establishments and production levels do not have to be registered or reported under FIFRA section 7. The magnitude of savings depends, in part, on whether Tidal Vision, LLC., would normally be eligible for reductions in fees that are available to a small business. (Ref.1)

For EPA, this action may reduce the Agency's level-of-effort that would otherwise be spent on registering pesticide products with little risk. However, PRIA fees are meant to support the Agency's work, so this action has negligible impact on overall resources. The impact on State regulatory costs is uncertain, as States have wide variability in how they regulate conventional pesticide products versus minimum risk pesticide products; this Federal action, however, is unlikely to significantly change how States register chitosan-containing pesticide products.

In the absence of an exemption, manufacturers may forego development and production of chitosan-based products. Thus, the exemption may ultimately benefit consumers who may see more of these products available at lower costs. An analysis of the cost and savings of adding chitosan to the list of active ingredients that can be used in minimum risk pesticide products under 40 CFR 152.25(f) can be found in the docket for this action.

F. What should I consider as I prepare my comments for EPA?

1. *Submitting CBI.* Do not submit this information to EPA through *regulations.gov* or email. Clearly mark the part or all of the information that you claim to be CBI. For CBI information in a disk or CD–ROM that you mail to EPA, mark the outside of the disk or CD–ROM as CBI and then identify electronically within the disk or CD–ROM the specific information that is claimed as CBI. In addition to one complete version of the comment that includes information claimed as CBI, a copy of the comment that does not contain the information claimed as CBI must be submitted for inclusion in the public docket. Information so marked will not be disclosed except in accordance with procedures set forth in 40 CFR part 2.

2. *Tips for preparing your comments.* When preparing and submitting your comments, see the commenting tips at *http://www.epa.gov/dockets/comments.html.*

II. Background

As authorized by FIFRA section 25(b), EPA has exempted from the requirement of registration certain pesticide products if they are composed of specified ingredients (recognized active and inert substances which are listed in the regulations) and labeled according to EPA's regulations in 40 CFR 152.25(f). EPA created the exemption for

minimum risk pesticides to eliminate the need for the Agency to expend significant resources to regulate products that were deemed to be of minimum risk to human health and the environment.

Chitosan is a naturally occurring substance that is produced in nature and is found in the cell walls of many fungi. Chitin and its derivative chitosan also occur naturally in the shells of all crustaceans (*e.g.,* crab, shrimp, and lobster) and in the exoskeletons of most insects. Microorganisms in nature produce enzymes that break down chitosan, resulting in sugars that are metabolized as a carbon and nitrogen source.

On October 10, 2018, EPA received a petition from Tidal Vision Products, LLC, requesting that the substance commonly known as chitosan (also known by its chemical name poly-D-glucosamine) (CAS Reg. No. 9012–76–4) be added to the list of active ingredients allowed in exempted minimum risk pesticide products under 40 CFR 152.25(f)(1). (Ref. 5). Subsequently, on April 4, 2019, EPA received an amendment to Tidal Vision Products, LLC's petition, requesting that chitosan also be added to the list of inert ingredients allowed in exempted minimum risk pesticide products under 40 CFR 152.25(f)(2). (Ref. 6)

This proposed rule addresses the 2018 petition and EPA is currently deferring a decision on the 2019 petition regarding whether to add chitosan to the list of allowable inert ingredients.

III. Proposal To Add Chitosan To the Minimum Risk Active Ingredient List

A. EPA's Decision on Tidal Vision Products, LLC's 2018 Petition

EPA finds that Tidal Vision Products LLC's 2018 petition to add chitosan to the list of active ingredients in 40 CFR 152.25(f)(1) has merit. Therefore, the Agency is granting the 2018 petition and proposing this rulemaking to add chitosan to the list of active ingredients allowed in exempted minimum risk pesticide products in 40 CFR 152.25(f)(1). EPA has determined that there is sufficient scientific evidence to support a conclusion of minimum risk for chitosan.

B. EPA's Scientific Review Supporting Its Decision

Based on all the information available to the Agency, there are low risk concerns for human health or the environment if chitosan is intended for use as a minimum risk pesticide. This conclusion is supported by information in EPA's reviews of registered pesticide products containing chitosan as an active ingredient. The conclusions are documented in EPA's August 23, 2019, scientific review memorandum, entitled ''Science review in support of the addition of Chitosan (Poly-D-Glucosamine) to the list of minimum risk pesticides (MRPs) contained in 40 CFR 152.25(f),'' (Ref. 7), the Chitin and Chitosan Summary Document Registration Review: Initial Docket September 2007, (Ref. 8), the Chitin and Chitosan Final Registration Review Decision Case 6063. December 11, 2008, (Ref. 9) and in the Chitin and Chitosan Final Work Plan Registration Review—Case 6063, January 2008, (Ref. 10).

IV. References

The following is a listing of the documents that are specifically referenced in this document. The docket includes these documents and other information considered by EPA, including documents that are referenced within the documents that are included in the docket, even if the referenced document is not physically located in the docket. For assistance in locating these other documents, please consult the person listed under **FOR FURTHER INFORMATION CONTACT**.

1. EPA. ''Cost Analysis of the Proposed Modification to the Minimum Risk Pesticide Listing Program.'' Prepared by Biological and Economic Analysis Division, Office of Pesticide Programs, EPA. July 2020.

2. EPA. ''Cost Estimates of Studies Required for Pesticide Registration.'' 2018. Accessed on September 30, 2019 at *https://www.epa.gov/pesticide-registration/cost-estimates-studies-required-pesticide-registration*.

3. EPA. ''PRIA Fee Category Table—Biopesticides Division—New Products: Table 13''. 2019b. Accessed on October 4, 2019 at *https://www.epa.gov/pria-fees/pria-fee-category-table-biopesticides-division-new-products*.

4. EPA. ''Application for New and Amended Pesticide Registration: Supporting Statement for An Information Collection Request (ICR).'' 2015. Accessed on October 16, 2019 at *https://www.federalregister.gov/documents/2016/07/01/2016-15737/agency-information-collection-activities-information-collection-request-submitted-to-omb-for-review*.

5. 2018 Petition. Tidal Vision Products, LLC. Petition to list the material Chitosan CAS# 9012–76–4 on the U.S. EPA FIFRA Minimum Risk List 40 CFR 152.25(f). October 10, 2018.

6. 2019 Petition (Amendment). Tidal Vision Products, LLC amendment to add Chitosan to the Minimum Risk Pesticide Inert Ingredient List at the same time as adding Chitosan to the Minimum Risk Pesticide Active Ingredient List; Re: Petition to list the material Chitosan CAS# 9012–76–4 on the U.S. EPA FIFRA Minimum Risk Pesticide List 40 CFR 152.25(f). April 4, 2019.

7. EPA. Science review in support of the addition of Chitosan (Poly-D-Glucosamine) to the list of minimum risk pesticides (MRPs) contained in 40 CFR 152.25(f). August 23, 2019.

8. EPA. Chitin and Chitosan Summary Document Registration Review: Initial Docket September 2007. Submitted to Docket EPA–HQ–EPA–2006–0566.

9. EPA. Chitin and Chitosan Final Registration Review Decision Case 6063. Signed December 11, 2008. Submitted to Docket EPA–HQ–EPA–2007–0566.

10. EPA. Chitin and Chitosan Final Work Plan Registration Review—Case 6063. January 2008. Submitted to Docket EPA–HQ–EPA–2007–0566.

V. FIFRA Review Requirements

In accordance with FIFRA section 25(a), EPA submitted a draft of this proposed rule to the United States Department of Agriculture (USDA) and the FIFRA Scientific Advisory Panel (SAP) for review. A draft of the proposed rule was also submitted to the appropriate Congressional Committees.

USDA responded without comments. The FIFRA SAP waived review of this proposed rule, concluding that the proposed rule does not contain scientific issues that warrant scientific review by the Panel.

VI. Statutory and Executive Order Reviews

Additional information about these statutes and Executive Orders can be found at *https://www.epa.gov/laws-regulations/laws-and-executive-orders*.

A. Executive Order 12866: Regulatory Planning and Review; and Executive Order 13563: Improving Regulation and Regulatory Review

This action is not a significant regulatory action and was therefore not submitted to the Office of Management and Budget (OMB) for review under Executive Orders 12866 (58 FR 51735, October 4, 1993) and 13563 (76 FR 3821, January 21, 2011).

B. Executive Order 13771: Reducing Regulation and Controlling Regulatory Costs

This action is expected to be an Executive Order 13771 deregulatory action (82 FR 9339, February 3, 2017). Details on the estimated cost savings of this proposed rule can be found in EPA's cost analysis (Ref. 1), which are briefly summarized in Unit I.E.

C. Paperwork Reduction Act (PRA)

This action does not impose any new information collection requirements that require additional review or approval by OMB under the PRA, 44 U.S.C. 3501 *et seq.* The information collection activities required under the proposed exemption are covered by the existing Information Collection Request (ICR), entitled ''Labeling Requirements for Certain Minimum Risk Pesticides under FIFRA Section 25(b)'' (OMB Control No. 2070–0187; EPA ICR No. 2475.03). The existing ICR estimates the burden of displaying mandatory active and inert ingredient and producer information on the labels of minimum risk pesticide products. To maintain exemption status, an exempt pesticide product must display the following information on its label; the label display name and the percentage (by weight) of all active ingredients, the label display name of all inert ingredients, and the name of the producer or the company for whom the product was produced, along with the producer/company's contact information. Labels provide important regulatory information for the Federal, State, and Tribal authorities that regulate or enforce minimum risk pesticide products.

D. Regulatory Flexibility Act (RFA)

I certify that this action will not have a significant economic impact on a substantial number of small entities under the RFA. In making this determination, the impact of concern is any significant adverse economic impact on small entities. An agency may certify that a rule will not have a significant economic impact on a substantial number of small entities if the rule relieves regulatory burden, has no net burden or otherwise has a positive economic effect on the small entities subject to the rule.

This proposal to add a substance to the list of active ingredients allowed in exempted minimum risk pesticide products reduces existing regulatory burden and will not have a significant economic impact on a substantial number of small entities. The cost savings are summarized in Unit I.E. We have therefore concluded that this action will relieve/have no net regulatory burden for all directly regulated small entities.

E. Unfunded Mandates Reform Act (UMRA)

This action does not contain an unfunded mandate of $100 million or more as described in UMRA, 2 U.S.C. 1531–1538, and does not significantly or uniquely affect small governments. This action imposes no enforceable duty on any state, local, or tribal governments or the private sector Accordingly, this action is not subject to the requirements of UMRA.

F. Executive Order 13132: Federalism

This action does not have federalism implications. It will not have substantial direct effects on the states, on the relationship between the national government and the states, or on the distribution of power and responsibilities among the various levels of government (Executive Order 13132 (64 FR 43255, August 10, 1999).

G. Executive Order 13175: Consultation and Coordination With Indian Tribal Governments

This action does not have Tribal implications, as specified in Executive Order 13175 (65 FR 67249, November 9, 2000). This action will not have any effect on tribal governments, on the relationship between the Federal government and the Indian tribes, or the distribution of power and responsibilities between the Federal government and Indian tribes. Currently, there are no known instances where a Tribal government is the producer of a minimum risk pesticide product exempt from regulation. Thus, Executive Order 13175 does not apply to this action.

H. Executive Order 13045: Protection of Children From Environmental Health Risks and Safety Risks

EPA interprets Executive Order 13045 (62 FR 19885, April 23, 1997) as applying only to those regulatory actions that concern environmental health or safety risks that the EPA has reason to believe may disproportionately affect children, per the definition of ''covered regulatory action'' in section 2–202 of the Executive Order. This action is not subject to Executive Order 13045 because it does not concern an environmental health risk or safety risk.

I. Executive Order 13211: Actions Concerning Regulations That Significantly Affect Energy Supply, Distribution, or Use

This action is not subject to Executive Order 13211 (66 FR 28355, May 22, 2001), because it is not a significant regulatory action under Executive Order 12866.

J. National Technology Transfer and Advancement Act (NTTAA)

NTTAA section 12(d), 15 U.S.C. 272 note, does not apply to this proposed rule because it does not involve technical standards.

K. Executive Order 12898: Federal Actions To Address Environmental Justice in Minority Populations and Low-Income Populations

The EPA believes that this action is not subject to Executive Order 12898 (59 FR 7629, February 16, 1994), because it does not establish an environmental health or safety standard. This rule proposes to add the substance commonly referred to as chitosan the list of active ingredients allowed in minimum risk pesticide products.

List of Subjects in 40 CFR Part 152

Environmental protection, Administrative practice and procedure, Agricultural commodities, Pesticides and pests, Reporting, and recordkeeping requirements.

Andrew Wheeler,
Administrator.

Therefore, for the reasons stated in the preamble, it is proposed that 40 CFR chapter I be amended as follows:

Part 152—[Amended]

■ 1. The authority citation for part 152 continues to read as follows:

Authority: 7 U.S.C. 136–136y; Subpart U is also issued under 31 U.S.C. 9701.

■ 2. In section 152.25 amend the table in paragraph (f)(1) by adding in alphabetical order the entry for ''Chitosan, Poly-D-glucosamine (CAS No. 9012–76–4)'' to the table to read as follows:

§ 152.25 Exemptions for pesticides of a character not requiring FIFRA regulation.

* * * * *

(f) * * *

(1) * * *

TABLE 1 OF PARAGRAPH (f)(1)

Label display name	Chemical name	Specifications	CAS No.
* * *	* * *	*	*
Chitosan	Poly-D-glucosamine		9012–76–4
* * *	* * *	*	*

* * * * *

[FR Doc. 2020–22646 Filed 10–30–20; 8:45 am]

BILLING CODE 6560–50–P

FEDERAL COMMUNICATIONS COMMISSION

47 CFR Part 73

[MB Docket No. 20–331; RM–11863; DA 20–1192; FRS 17152]

Television Broadcasting Services Mesa, Arizona

AGENCY: Federal Communications Commission.

ACTION: Proposed rule.

SUMMARY: The Commission has before it a petition for rulemaking filed by Multimedia Holdings Corporation (Multimedia), licensee of KNPX, channel 12, Mesa, Arizona, requesting the substitution of channel 18 for channel 12 at Mesa in the DTV Table of Allotments. The Commission instituted a freeze on the acceptance of rulemaking petitions by full power television stations requesting channel substitutions in May 2011, and Multimedia asks that the Commission waive the freeze to permit KPNX to change from a VHF to a UHF channel to better serve its over-the-air viewers. Multimedia states that the Commission has recognized that VHF channels have certain propagation characteristics which may cause reception issues for some viewers. While Multimedia acknowledges that VHF reception issues are not universal, it states that since the 2009 digital transition, when it began operating exclusively on digital channel 12, KPNX has received a steady stream of complaints from viewers unable to receive the station's over-the-air signal, despite being able to receive signals from other local stations. Multimedia believes that waiver of the channel substitution freeze would serve the public interest.

DATES: Comments must be filed on or before November 17, 2020 and reply comments on or before November 27, 2020.

ADDRESSES: Federal Communications Commission, Office of the Secretary, 45 L Street NE, Washington, DC 20554. In addition to filing comments with the FCC, interested parties should serve counsel for petitioner as follows: Michael Beder, Esq., Associate General Counsel, TEGNA, Inc., 8350 Broad Street, Suite 2000, Tysons, Virginia 22102.

FOR FURTHER INFORMATION CONTACT: Joyce Bernstein, Media Bureau, at (202) 418–1647; or Joyce Bernstein, Media Bureau, at *Joyce.Bernstein@fcc.gov.*

SUPPLEMENTARY INFORMATION: This is a synopsis of the Commission's *Notice of Proposed Rulemaking,* MB Docket No. 20–331; RM–11863; DA 20–1192, adopted October 13, 2020, and released October 13, 2020. The full text of this document is available for download at *https://www.fcc.gov/edocs.* To request materials in accessible formats (braille, large print, computer diskettes, or audio recordings), please send an email to *FCC504@fcc.gov* or call the Consumer & Government Affairs Bureau at (202) 418–0530 (VOICE), (202) 418–0432 (TTY).

This document does not contain information collection requirements subject to the Paperwork Reduction Act of 1995, Public Law 104–13. In addition, therefore, it does not contain any proposed information collection burden ''for small business concerns with fewer than 25 employees,'' pursuant to the Small Business Paperwork Relief Act of 2002, Public Law 107–198, *see* 44 U.S.C. 3506(c)(4). Provisions of the Regulatory Flexibility Act of 1980, 5 U.S.C. 601–612, do not apply to this proceeding.

Members of the public should note that all *ex parte* contacts are prohibited from the time a Notice of Proposed Rulemaking is issued to the time the matter is no longer subject to Commission consideration or court review, *see* 47 CFR 1.1208. There are, however, exceptions to this prohibition, which can be found in Section 1.1204(a) of the Commission's rules, 47 CFR 1.1204(a).

See Sections 1.415 and 1.420 of the Commission's rules for information regarding the proper filing procedures for comments, 47 CFR 1.415 and 1.420.

List of Subjects in 47 CFR Part 73

Television.

Federal Communications Commission.

Thomas Horan,

Chief of Staff, Media Bureau.

Proposed Rule

For the reasons discussed in the preamble, the Federal Communications Commission proposes to amend 47 CFR part 73 as follows:

PART 73—Radio Broadcast Service

■ 1. The authority citation for part 73 continues to read as follows:

Authority: 47 U.S.C. 154, 155, 301, 303, 307, 309, 310, 334, 336, 339.

§ 73.622 [Amended]

■ 2. Amend § 73.622(i), the Post-Transition Table of DTV Allotments under Arizona, by removing channel 12 and adding channel 18 at Mesa.

[FR Doc. 2020–23309 Filed 10–30–20; 8:45 am]

BILLING CODE 6712–01–P

Notices

Federal Register
Vol. 85, No. 212
Monday, November 2, 2020

This section of the FEDERAL REGISTER contains documents other than rules or proposed rules that are applicable to the public. Notices of hearings and investigations, committee meetings, agency decisions and rulings, delegations of authority, filing of petitions and applications and agency statements of organization and functions are examples of documents appearing in this section.

DEPARTMENT OF COMMERCE

Economic Development Administration

Notice of Petitions by Firms for Determination of Eligibility To Apply for Trade Adjustment Assistance

AGENCY: Economic Development Administration, U.S. Department of Commerce.

ACTION: Notice and opportunity for public comment.

SUMMARY: The Economic Development Administration (EDA) has received petitions for certification of eligibility to apply for Trade Adjustment Assistance from the firms listed below. Accordingly, EDA has initiated investigations to determine whether increased imports into the United States of articles like or directly competitive with those produced by each of the firms contributed importantly to the total or partial separation of the firms' workers, or threat thereof, and to a decrease in sales or production of each petitioning firm.

SUPPLEMENTARY INFORMATION:

LIST OF PETITIONS RECEIVED BY EDA FOR CERTIFICATION OF ELIGIBILITY TO APPLY FOR TRADE ADJUSTMENT ASSISTANCE

[10/9/2020 through 10/26/2020]

Firm name	Firm address	Date accepted for investigation	Product(s)
Magna Products Corporation	777 Mount Read Boulevard, Rochester, NY 14606.	10/15/2020	The firm manufactures electric motors and parts thereof.
Newspace, Inc	1960 Innerbelt Business Center Drive, St. Louis, MO 63114.	10/16/2020	The firm manufactures wooden cabinetry and wooden furniture.
Alpha Precision, Inc	9750 Route 126, Yorkville, IL 60560	10/22/2020	The firm manufactures glass wafers.
SunDance Graphics, LLC, d/b/a SunDance Marketing Solutions.	9564 Delegates Drive, Orlando, FL 32837.	10/23/2020	The firm manufactures printed canvas wall coverings.

Any party having a substantial interest in these proceedings may request a public hearing on the matter. A written request for a hearing must be submitted to the Trade Adjustment Assistance Division, Room 71030, Economic Development Administration, U.S. Department of Commerce, Washington, DC 20230, no later than ten (10) calendar days following publication of this notice. These petitions are received pursuant to section 251 of the Trade Act of 1974, as amended.

Please follow the requirements set forth in EDA's regulations at 13 CFR 315.9 for procedures to request a public hearing. The Catalog of Federal Domestic Assistance official number and title for the program under which these petitions are submitted is 11.313, Trade Adjustment Assistance for Firms.

Bryan Borlik,
Director.

[FR Doc. 2020–24165 Filed 10–30–20; 8:45 am]
BILLING CODE 3510–WH–P

DEPARTMENT OF COMMERCE

Foreign-Trade Zones Board

[B–63–2020]

Foreign-Trade Zone (FTZ) 26—Atlanta, Georgia; Notification of Proposed Production Activity; Zinus USA Inc. (Foam Bedding), McDonough, Georgia

Zinus USA Inc. (Zinus) submitted a notification of proposed production activity to the FTZ Board for its facility in McDonough, Georgia. The notification conforming to the requirements of the regulations of the FTZ Board (15 CFR 400.22) was received on October 22, 2020.

The Zinus facility is located within Subzone 26T. The facility will be used for the production of home furnishing products, including beds and furniture. Pursuant to 15 CFR 400.14(b), FTZ activity would be limited to the specific foreign-status materials and components and specific finished products described in the submitted notification (as described below) and subsequently authorized by the FTZ Board.

Production under FTZ procedures could exempt Zinus from customs duty payments on the foreign-status components used in export production. On its domestic sales, for the foreign-status materials/components noted below, Zinus would be able to choose the duty rates during customs entry procedures that apply to foam beds, foam pillows and foam cushions (duty

rate ranges from 3.0% to 6.0%). Zinus would be able to avoid duty on foreign-status components which become scrap/waste. Customs duties also could possibly be deferred or reduced on foreign-status production equipment.

The components and materials sourced from abroad include: polyol; polyether polyol; polyester polyol; methylene diphenyl diisocyanate; toluene diisocyanate; urea; catalyst; surfactant containing silicone polyalkyleneoxide copolymer and polyether polyol; surfactant containing polyalkyleneoxide modified polysiloxane and polyalkylene glycol; chlorinated paraffin; corn starch; styrene-butadiene; antibacterial agent; charcoal; contact adhesive; and, green tea extract (duty rate ranges from duty-free to 6.5%). The request indicates that certain materials/components are subject to duties under Section 301 of the Trade Act of 1974 (Section 301), depending on the country of origin. The applicable Section 301 decisions require subject merchandise to be admitted to FTZs in privileged foreign status (19 CFR 146.41).

Public comment is invited from interested parties. Submissions shall be addressed to the Board's Executive Secretary and sent to: *ftz@trade.gov.* The closing period for their receipt is December 14, 2020.

A copy of the notification will be available for public inspection in the ''Reading Room'' section of the Board's website, which is accessible via *www.trade.gov/ftz.*

For further information, contact Juanita Chen at *juanita.chen@trade.gov* or 202–482–1378.

Dated: October 27, 2020.

Andrew McGilvray,

Executive Secretary.

[FR Doc. 2020–24204 Filed 10–30–20; 8:45 am]

BILLING CODE 3510–DS–P

DEPARTMENT OF COMMERCE

Foreign-Trade Zones Board

[B–22–2020]

Foreign-Trade Zone 139—Sierra Vista, Arizona; Withdrawal of Application for Reorganization (Expansion of Service Area) Under Alternative Site Framework

Notice is hereby given of the withdrawal of the application submitted by the Arizona Regional Economic Development Foundation, grantee of FTZ 139, requesting authority to reorganize the zone to expand its service area under the alternative site framework. The application was docketed on April 21, 2020 (85 FR 23506, April 28, 2020; 85 FR 26924, May 6, 2020). The withdrawal was requested by the applicant because of changed circumstances. The case has been closed without prejudice.

Dated: October 27, 2020.

Andrew McGilvray,

Executive Secretary.

[FR Doc. 2020–24205 Filed 10–30–20; 8:45 am]

BILLING CODE 3510–DS–P

DEPARTMENT OF COMMERCE

International Trade Administration

[C–489–834]

Large Diameter Welded Pipe From the Republic of Turkey: Rescission of 2018–2019 Countervailing Duty Administrative Review

AGENCY: Enforcement and Compliance, International Trade Administration, Department of Commerce.

SUMMARY: The Department of Commerce (Commerce) is rescinding the administrative review of the countervailing duty (CVD) order on large diameter welded carbon and alloy steel structural pipe (welded structural pipe) from the Republic of Turkey (Turkey) for the period of review (POR) June 29, 2018, through December 31, 2019.

DATES: Applicable November 2, 2020.

FOR FURTHER INFORMATION CONTACT: Ajay Menon, AD/CVD Operations, Office II, Enforcement and Compliance, International Trade Administration, U.S. Department of Commerce, 1401 Constitution Avenue NW, Washington, DC 20230; telephone: (202) 482–1993.

Background

On May 1, 2020, Commerce published in the **Federal Register** a notice of opportunity to request an administrative review of the CVD order on welded structural pipe from Turkey for the POR.[1] On June 1, 2020, Commerce received a timely request from American Cast Iron Pipe Company; Berg Steel Pipe Corp.; Berg Spiral Pipe Corp.; Dura-Bond Industries; Stupp Corporation; and Welspun Global Trade LLC; individually and as members of the American Line Pipe Producers Association; Greens Bayou Pipe Mill, LP; JS W Steel (USA) Inc.; Skyline Steel; and Trinity Products LLC (collectively, the petitioners), in accordance with section 751(a) of the Tariff Act of 1930, as amended (the Act), and 19 CFR 351.213(b), to conduct an administrative review of this CVD order for 16 companies.[2]

On July 10, 2020, Commerce published in the **Federal Register** a notice of initiation with respect to these companies.[3] On October 7, 2020, the petitioners timely withdrew their request for an administrative review for all 16 companies.[4]

Rescission of Review

Pursuant to 19 CFR 351.213(d)(1), Commerce will rescind an administrative review, in whole or in part, if the parties that requested a review withdraw the request within 90 days of the date of publication of notice of initiation of the requested review. As noted above, the petitioners withdrew their request for review by the 90-day deadline, and no other party requested an administrative review of this order. Therefore, we are rescinding the administrative review of the CVD order on welded structural pipe from Turkey covering the POR in its entirety.

Assessment

Commerce will instruct U.S. Customs and Border Protection (CBP) to assess countervailing duties on all appropriate entries. Because Commerce is rescinding this administrative review in its entirety, the entries to which this administrative review pertained shall be assessed at rates equal to the cash deposit of estimated countervailing duties required at the time of entry, or withdrawal from warehouse, for consumption, in accordance with 19 CFR 351.212(c)(1)(i). Commerce intends to issue appropriate assessment instructions directly to CBP 15 days after the date of publication of this notice in the **Federal Register**.

Notification Regarding Administrative Protective Orders

This notice serves as the only reminder to parties subject to administrative protective order (APO) of their responsibility concerning the return or destruction of proprietary information disclosed under APO in accordance with 19 CFR 351.305(a)(3). Timely written notification of the

[1] *See Antidumping or Countervailing Duty Order, Finding, or Suspended Investigation; Opportunity to Request Administrative Review,* 85 FR 25394 (May 1, 2020).

[2] *See* Petitioners' Letter, ''Large Diameter Welded Pipe from Turkey: Request for Administrative Review,'' dated June 1, 2020.

[3] *See Initiation of Antidumping and Countervailing Duty Administrative Reviews,* 85 FR 41540 (July 10, 2020).

[4] *See* Petitioners' Letter, ''Large Diameter Welded Pipe from the Republic of Turkey: Withdrawal of Request for Administrative Review,'' dated October 7, 2020.

return/destruction of APO materials or conversion to judicial protective order is hereby requested. Failure to comply with the regulations and terms of an APO is a sanctionable violation.

Notification to Interested Parties

This notice is issued and published in accordance with sections 751(a)(1) and 777(i)(1) of the Act and 19 CFR 351.213(d)(4).

Dated: October 27, 2020.

James Maeder,

Deputy Assistant Secretary for Antidumping and Countervailing Duty Operations.

[FR Doc. 2020–24178 Filed 10–30–20; 8:45 am]

BILLING CODE 3510–DS–P

DEPARTMENT OF COMMERCE

International Trade Administration

[A–469–815]

Finished Carbon Steel Flanges From Spain: Preliminary Results of Antidumping Duty Administrative Review; 2018–2019

AGENCY: Enforcement and Compliance, International Trade Administration, Department of Commerce.

SUMMARY: The Department of Commerce (Commerce) preliminarily determines that producers or exporters of finished carbon steel flanges (flanges) from Spain subject to this review made sales of subject merchandise at less than normal value during the period of review (POR) June 1, 2018 through May 31, 2019. We invite interested parties to comment on these preliminary results.

DATES: Applicable November 2, 2020.

FOR FURTHER INFORMATION CONTACT: Marc Castillo or Mark Flessner, AD/CVD Operations, Office VI, Enforcement and Compliance, International Trade Administration, Department of Commerce, 1401 Constitution Avenue NW, Washington, DC 20230; telephone: (202) 482–0519 or (202) 482–6312, respectively.

SUPPLEMENTARY INFORMATION:

Background

On June 14, 2017, we published in the **Federal Register** an antidumping duty (AD) order on flanges from Spain.[1] On June 3, 2019, we published a notice of opportunity to request an administrative review of the *Order*.[2] Based on timely requests for administrative review, we initiated an administrative review of eight companies: (1) ULMA Forja, S.Coop; (2) Grupo Cunado; (3) Tubacero, S.L.; (4) Ateaciones De Metales Sinterizados S.A.; (5) Transglory S.A.; (6) Central Y Almacenes; (7) Friedrich Geldbach Gmbh; and (8) Farina Group Spain.[3] On November 19, 2019, we selected ULMA as the sole mandatory respondent in this review.[4] For a complete description of the events that followed the initiation of this administrative review, *see* the Preliminary Decision Memorandum.[5] The Preliminary Decision Memorandum is a public document and is on file electronically via Enforcement and Compliance's AD and Countervailing Duty Centralized Electronic Service System (ACCESS). ACCESS is available to registered users at *https://access.trade.gov,* and to all parties in the Central Records Unit, Room B8024 of the main Commerce building. In addition, a complete version of the Preliminary Decision Memorandum can be accessed directly on the internet at *http://enforcement.trade.gov/frn/*. The signed and the electronic versions of the Preliminary Decision Memorandum are identical in content. A list of topics included in the Preliminary Decision Memorandum is included as the appendix to this notice.

On April 24, 2020, Commerce tolled all deadlines in administrative reviews by 50 days.[6] On July 21, 2020, Commerce tolled all deadlines in administrative reviews by an additional 60 days.[7] On February 21, 2020, and July 6, 2020, we extended the deadline for the preliminary results, by a total of 120 days.[8] The deadline for the preliminary results of this administrative review is now October 19, 2020.

Scope of the Order

The scope of the *Order* covers finished carbon steel flanges. Finished carbon steel flanges are currently classified under subheadings 7307.91.5010 and 7307.91.5050 of the Harmonized Tariff Schedule of the United States (HTSUS). They may also be entered under HTSUS subheadings 7307.91.5030 and 7307.91.5070. The HTSUS subheadings are provided for convenience and customs purposes; the written description of the scope is dispositive. A full description of the scope of the *Order* is contained in the Preliminary Decision Memorandum.

Methodology

Commerce conducted this review in accordance with section 751 of the Tariff Act of 1930, as amended (the Act). Export price is calculated in accordance with section 772 of the Act. Normal value is calculated in accordance with section 773 of the Act. For a full description of the methodology underlying these preliminary results, *see* the Preliminary Decision Memorandum.

Preliminary Results of Administrative Review

We preliminarily determine that the following weighted-average dumping margins exist for the period June 1, 2018, through May 31, 2019:

Exporter/manufacturer	Weighted-average dumping margin (percent)
ULMA Forja, S.Coop	1.03
Ateaciones De Metales Sinterizados S.A	1.03
Central Y Almacenes	1.03
Farina Group Spain	1.03
Friedrich Geldbach Gmbh	1.03
Grupo Cunado	1.03
Transglory S.A	1.03
Tubacero, S.L	1.03

Non-Individually Examined Companies

For the rate for non-selected respondents in an administrative review, generally, Commerce looks to section 735(c)(5) of the Act, which provides instructions for calculating the all-others rate in a market economy investigation. Under section

---

[1] *See Finished Carbon Steel Flanges from Spain: Antidumping Duty Order,* 82 FR 27229 (June 14, 2017) (*Order*).

[2] *See Antidumping or Countervailing Duty Order, Finding, or Suspended Investigation; Opportunity to Request Administrative Review,* 84 FR 25521 (June 3, 2019).

[3] *See Initiation of Antidumping and Countervailing Duty Administrative Reviews,* 84 FR 36572 (July 29, 2019); *see also Initiation of Antidumping and Countervailing Duty Administrative Reviews,* 84 FR 47242 (September 9, 2019), which corrected the spelling of one company's name.

[4] *See* Memorandum, ''Identification of Mandatory Respondent for the 2018–2019 Administrative Review of the Antidumping Duty Order on Finished Carbon Steel Flanges from Spain,'' dated November 19, 2019.

[5] *See* Memorandum, ''Finished Carbon Steel Flanges from Spain: Decision Memorandum for Preliminary Results of Antidumping Duty Administrative Review; 2018–2019,'' dated concurrently with, and hereby adopted by, this notice (Preliminary Decision Memorandum).

[6] *See* Memorandum, ''Tolling of Deadlines for Antidumping and Countervailing Duty Administrative Reviews in Response to Operational Adjustments Due to COVID–19,'' dated April 24, 2020.

[7] *See* Memorandum, ''Tolling of Deadlines for Antidumping and Countervailing Duty Administrative Reviews,'' dated July 21, 2020.

[8] *See* Memorandum, ''Finished Carbon Steel Flanges from Spain: Extension of Time Limit for Preliminary Results of Antidumping Duty Administrative Review, 2018–2019,'' dated February 21, 2020; *see also* Memorandum, ''Finished Carbon Steel Flanges from Spain: Extension of Time Limit for Preliminary Results of Antidumping Duty Administrative Review, 2018–2019,'' dated July 6, 2020.

735(c)(5)(A) of the Act, the all-others rate is normally ''an amount equal to the weighted average of the estimated weighted-average dumping margins established for exporters and producers individually investigated, excluding any zero or *de minimis* margins, and any margins determined entirely {on the basis of facts available}.'' We preliminarily calculated a margin for ULMA that was not zero, *de minimis,* or based on facts available. Accordingly, we have preliminarily applied the margin calculated for ULMA to the non-individually examined respondents.

Disclosure and Public Comment

We intend to disclose the calculations performed for these preliminary results to the parties within five days after public announcement of the preliminary results in accordance with 19 CFR 351.224(b). Interested parties may submit case briefs no later than 30 days after the date of publication of these preliminary results of review.[9] Rebuttal briefs may be filed no later than seven days after case briefs are due and may respond only to arguments raised in the case briefs.[10] Parties who submit case briefs or rebuttal briefs in this proceeding are encouraged to submit with each argument: (1) A statement of the issue, (2) a brief summary of the argument, and (3) a table of authorities.[11] Note that Commerce has temporarily modified certain of its requirements for serving documents containing business proprietary information, until further notice.[12]

Pursuant to 19 CFR 351.310(c), interested parties who wish to request a hearing must submit a written request to the Assistant Secretary for Enforcement and Compliance, filed electronically via ACCESS. An electronically filed document must be received successfully in its entirety by Commerce's electronic records system, ACCESS, by 5:00 p.m. Eastern Time within 30 days after the date of publication of this notice.[13] Requests should contain: (1) The party's name, address and telephone number; (2) the number of participants; and (3) a list of issues to be discussed. Issues raised in the hearing will be limited to those raised in the respective case briefs.

Unless otherwise extended, Commerce intends to issue the final results of this administrative review, which will include the results of its analysis of issues raised in any briefs, within 120 days of publication of these preliminary results of review, pursuant to section 751(a)(3)(A) of the Act.

Assessment Rate

Upon issuing the final results, Commerce will determine, and U.S. Customs and Border Protection (CBP) shall assess, antidumping duties on all appropriate entries covered by this review.[14] If the respondent's weighted-average dumping margin is above *de minimis* (*i.e.,* 0.50 percent) in the final results of this review, we intend to calculate an importer-specific assessment rate on the basis of the ratio of the total amount of antidumping duties calculated for the importer's examined sales and the total entered value of the sales in accordance with 19 CFR 351.212(b)(1).[15] If the respondent's weighted-average dumping margin is zero or *de minimis* in the final results, we will instruct CBP not to assess duties on any of its entries in accordance with the *Final Modification for Reviews.*[16] The final results of this administrative review shall be the basis for the assessment of antidumping duties on entries of merchandise under review and for future deposits of estimated duties, where applicable.

For entries of subject merchandise during the POR produced by ULMA for which it did not know its merchandise was destined for the United States, we will instruct CBP to liquidate unreviewed entries at the all-others rate if there is no rate for the intermediate company(ies) involved in the transaction.

We intend to issue liquidation instructions to CBP 15 days after publication of the final results of this review.

Cash Deposit Requirements

The following deposit requirements for estimated antidumping duties will be effective upon publication of the notice of final results of this review for all shipments of flanges from Spain entered, or withdrawn from warehouse, for consumption on or after the date of publication as provided by section 751(a)(2) of the Act: (1) The cash deposit rate for the companies under review, will be the rate established in the final results of the review (except, if the rate is zero or *de minimis,* no cash deposit will be required); (2) for merchandise exported by producers or exporters not covered in this review but covered in a prior segment of the proceeding, the cash deposit rate will continue to be the company-specific rate published for the most recent period; (3) if the exporter is not a firm covered in this review, a prior review, or the original investigation but the producer is, then the cash deposit rate will be the rate established for the most recent period for the producer of the merchandise; (4) the cash deposit rate for all other producers or exporters will continue to be 18.81 percent,[17] the all-others rate established in the less-than-fair-value investigation.

These cash deposit requirements, when imposed, shall remain in effect until further notice.

Notification to Importers

This notice serves as a preliminary reminder to importers of their responsibility under 19 CFR 351.402(f)(2) to file a certificate regarding the reimbursement of antidumping duties prior to liquidation of the relevant entries during this POR. Failure to comply with this requirement could result in Commerce's presumption that reimbursement of antidumping duties occurred and the subsequent assessment of double antidumping duties.

Administrative Protective Orders

This notice also serves as a reminder to parties subject to administrative protective order (APO) of their responsibility concerning the disposition of proprietary information disclosed under APO in accordance with 19 CFR 351.305(a)(3). Timely written notification of the return or destruction of APO materials or conversion to judicial protective order is hereby requested. Failure to comply with the regulations and the terms of an APO is a sanctionable violation.

Notification to Interested Parties

Commerce is issuing and publishing these results in accordance with sections 751(a)(1) and 777(i) of the Act and 19 CFR 351.221(b)(4).

[9] *See* 19 CFR 351.309(c)(ii).

[10] *See* 19 CFR 351.309(d); *see also Temporary Rule Modifying AD/CVD Service Requirements Due to COVID–19; Extension of Effective Period,* 85 FR 41363 (July 10, 2020).

[11] *See* 19 CFR 351.309(c)(2) and (d)(2).

[12] *See Temporary Rule Modifying AD/CVD Service Requirements Due to COVID–19; Extension of Effective Period,* 85 FR 41363 (July 10, 2020).

[13] *See* 19 CFR 351.310(c).

[14] *See* 19 CFR 351.212(b)(1).

[15] In these preliminary results, Commerce applied the assessment rate calculation method adopted in *Antidumping Proceedings: Calculation of the Weighted-Average Dumping Margin and Assessment Rate in Certain Antidumping Duty Proceedings; Final Modification,* 77 FR 8101 (February 14, 2012) (*Final Modification for Reviews*).

[16] *Id.,* 77 FR at 8102.

[17] *See* the *Order,* 82 FR 27229.

Dated: October 16, 2020.

Jeffrey I. Kessler,

Assistant Secretary for Enforcement and Compliance.

Appendix

List of Topics Discussed in the Preliminary Decision Memorandum

I. Summary
II. Background
III. Scope of the Order
IV. Discussion of the Methodology
V. Recommendation

[FR Doc. 2020–24049 Filed 10–30–20; 8:45 am]

BILLING CODE 3510–DS–P

DEPARTMENT OF COMMERCE

National Oceanic and Atmospheric Administration

[RTID 0648–XA608]

North Pacific Fishery Management Council; Public Meetings

AGENCY: National Marine Fisheries Service (NMFS), National Oceanic and Atmospheric Administration (NOAA), Commerce.

ACTION: Notice of public meetings.

SUMMARY: The North Pacific Fishery Management Council (Council) Groundfish Plan Teams will meet via webconference.

DATES: The meetings will be held on Monday, November 16, 2020 through Friday, November 20, 2020, from 8 a.m. to 4 p.m., Alaska Time.

ADDRESSES: The meeting will be a webconference. Join online through the link at *https://meetings.npfmc.org/Meeting/Details/1724.*

Council address: North Pacific Fishery Management Council, 1007 W 3rd Ave., Anchorage, AK 99501–2252; telephone: (907) 271–2809. Instructions for attending the meeting are given under **SUPPLEMENTARY INFORMATION**, below.

FOR FURTHER INFORMATION CONTACT: Sara Cleaver or Steve MacLean, Council staff; phone: (907) 271–2809 and email: *sara.cleaver@noaa.gov* or *Steve.MacLean@noaa.gov.* For technical support please contact our administrative staff; email: *npfmc.admin@noaa.gov.*

SUPPLEMENTARY INFORMATION:

Agenda

Monday, November 16, 2020 to Friday, November 20, 2020

The Bering Sea and Aleutian Islands (BSAI) and Gulf of Alaska (GOA) Plan Teams will compile and review the annual BSAI and GOA Groundfish Stock Assessment and Fishery Evaluation (SAFE) reports, and recommend final groundfish harvest and prohibited species specifications for 2021/22. The Plan Teams will also review the Economic Report and the Ecosystem Status Report and assessments. The agenda is subject to change, and the latest version will be posted at *https://meetings.npfmc.org/Meeting/Details/1724.* prior to the meeting, along with meeting materials.

Connection Information

You can attend the meeting online using a computer, tablet, or smart phone; or by phone only. Connection information will be posted online at: *https://meetings.npfmc.org/Meeting/Details/1724.*

Public Comment

Public comment letters should be submitted electronically to *https://meetings.npfmc.org/Meeting/Details/1724.*

Authority: 16 U.S.C. 1801 *et seq.*

Dated: October 28, 2020.

Tracey L. Thompson,

Acting Deputy Director, Office of Sustainable Fisheries, National Marine Fisheries Service.

[FR Doc. 2020–24212 Filed 10–30–20; 8:45 am]

BILLING CODE 3510–22–P

DEPARTMENT OF COMMERCE

National Oceanic and Atmospheric Administration

[RTID 0648–XA257]

Magnuson-Stevens Act Provisions; General Provisions for Domestic Fisheries; Application for Exempted Fishing Permits

AGENCY: National Marine Fisheries Service (NMFS), National Oceanic and Atmospheric Administration (NOAA), Commerce.

ACTION: Notice; request for comments.

SUMMARY: The Assistant Regional Administrator for Sustainable Fisheries, Greater Atlantic Region, NMFS, has made a preliminary determination that an application submitted by the Gulf of Maine Research Institute to amend an existing Exempted Fishing Permit contains all of the required information and warrants further consideration. The amended Exempted Fishing Permit would provide one vessel participating in an electronic monitoring program with an exemption to conduct exploratory fishing using cod ends with smaller mesh than otherwise permitted. The Exempted Fishing Permit would test the effect of different codend mesh combinations on the catch of pollock and Gulf of Maine haddock while on trips targeting Acadian redfish. Regulations under the Magnuson-Stevens Fishery Conservation and Management Act require publication of this notification to provide interested parties the opportunity to comment on applications for proposed exempted fishing permits.

DATES: Comments must be received on or before November 17, 2020.

ADDRESSES: You may submit written comments by either of the following methods:

- *Email: nmfs.gar.efp@noaa.gov.* Include in the subject line ''GMRI MREM EFP Amendment.''
- *Mail:* Michael Pentony, Regional Administrator, NMFS, Greater Atlantic Regional Fisheries Office, 55 Great Republic Drive, Gloucester, MA 01930. Mark the outside of the envelope ''GMRI MREM EFP Amendment.''

Copies of the supplemental information report (SIR) developed in support of this project may be obtained by contacting Claire Fitz-Gerald, Fishery Policy Analyst at the Greater Atlantic Regional Fisheries Office, 978–281–9255.

FOR FURTHER INFORMATION CONTACT: Mark Grant, Fishery Policy Analyst, 978–281–9145.

SUPPLEMENTARY INFORMATION: On August 1, 2020, NMFS granted an Exempted Fishing Permit (EFP) to the Gulf of Maine Research Institute to continue developing a maximized retention electronic monitoring (MREM) model and an accompanying dockside monitoring (DSM) program to monitor high-volume bottom-trawl vessels in the groundfish fleet. For more information on the details of the EFP see the notice published April 9, 2020 (85 FR 19931). The Gulf of Maine Research Institute, in conjunction with the Northeast Sector Service Network and a commercial fishing business, has submitted an application to amend the EFP. The amended EFP would allow one vessel participating in the MREM program an additional exemption from the minimum mesh size requirements for the Gulf of Maine and Georges Bank regulated mesh areas codified at 50 CFR 648.80(a)(3)(i) and (a)(4)(i) to use cod ends with either square or diamond mesh as small as 4.5 inches (11.4 cm). The exemption would be used to conduct exploratory fishing to increase the catch of pollock and Gulf of Maine haddock while on trips targeting Acadian redfish. This EFP would be effective for the 2020 and 2021 fishing years, through April 30, 2022. Because

using alternative codend configurations to target haddock and pollock on trips targeting Acadian redfish is outside of the scope of the project as currently approved, we are taking public comment on the revision request.

Because vessels are fully monitored, participating vessels are granted exemptions to incentivize participation in the project and increase fishing opportunities for healthy stocks. The current MREM EFP allows vessels to use the codend configuration used in the Canadian haddock fishery (5.1-inch (13.0-cm) square mesh codend with a haddock separator device or Ruhle trawl) on Georges Bank and/or the codend configuration tested in the REDNET project (4.5-inch (11.4-cm) diamond mesh codend). The latter mesh size is restricted to the Redfish Exemption Area and all standard sector exemption requirements still apply. These exemptions are intended to improve size selectivity and increase catch of target species, while avoiding groundfish species of concern. The requested amendment to the EFP would allow a single high-volume trawler to test additional codend mesh configurations to increase catch of pollock and Gulf of Maine haddock, two healthy stocks that are underutilized, while targeting Acadian redfish. Accordingly, the participating vessel would be exempt from the geographic area, gear configuration requirements, and bycatch thresholds associated with the redfish exemption. The vessel would have cameras recording on 100 percent of groundfish trips and all catch would be counted against the appropriate sector allocations.

The participating vessel could use the alternative codend configurations to increase the catch of pollock and Gulf of Maine haddock while targeting Acadian redfish in an expanded geographic area (see Figure 1 and Table 1) encompassing deep-water portions of the Gulf of Maine and the northern portion of Georges Bank.

The applicants requested to operate in this geographic area (where the redfish exemption was permitted in fishing years 2015–2019) to test the feasibility of using alternative codend configurations to increase the catch of legal size pollock and Gulf of Maine haddock while on trips targeting Acadian redfish. Unlike trips under the current redfish exemption, which is authorized in a different geographic area during fishing year 2020, the intent of this EFP amendment is to conduct exploratory fishing and any promising codend configurations could then be further evaluated in a rigorous experiment for possible future management consideration.

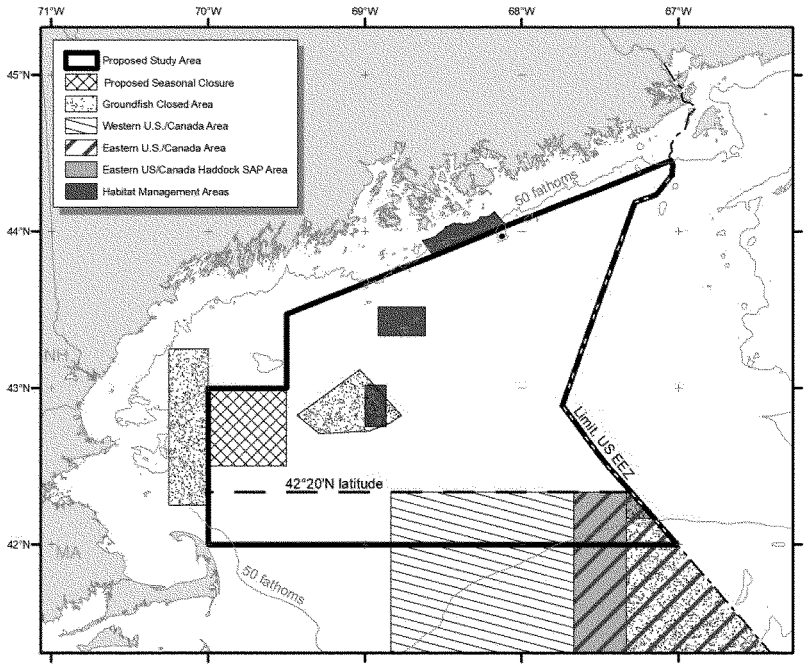

Figure 1 -- Proposed Area

The area is bounded on the east by the U.S.-Canada Maritime Boundary, and bounded on the north, west, and south by the coordinates in Table 1, connected by straight lines in the order listed.

TABLE 1—AREA COORDINATES

Point	N lat.	W long.
A	44°27.25′	67°02.75′
B	44°16.25′	67°30.00′
C	44°04.50′	68°00.00′
D	43°52.25′	68°30.00′
E	43°40.25′	69°00.00′
F	43°28.25′	69°30.00′
G	43°00.00′	69°30.00′
H	43°00.00′	70°00.00′
I	42°00.00′	70°00.00′
J	42°00.00′	[1] 67°00.63′

[1] The intersection of 42°00′ N latitude and the U.S.-Canada Maritime Boundary, approximate longitude in parentheses.

Due to concerns about Gulf of Maine cod bycatch, the mesh size exemption would not be used in 30-minute square

131 during the months of February and March. The area is bounded on the east, north, west, and south by the coordinates in Table 2, connected by straight lines in the order listed.

TABLE 2—SEASONAL CLOSURE COORDINATES

Point	N lat.	W long.
G	43°00.00′	69°30.00′
H	43°00.00′	70°00.00′
K	42°30.00′	70°00.00′
L	42°30.00′	69°30.00′
G	43°00.00′	69°30.00′

While fishing in the MREM program, the participating vessel's groundfish trips will be conducted under the EM requirements of the parent MREM EFP, but will have catch data evaluated separately from other trips taken under the MREM program or the sector redfish exemption. The REDNET program demonstrated it was possible to harvest redfish using a 4.5-inch (11.4-cm) diamond mesh codend without substantial catch of undersized redfish or other commercially important groundfish species. Pollock was the main bycatch species in that study and the intent of this EFP is to increase the catch of pollock and Gulf of Maine haddock because they are underutilized healthy stocks. Other gear studies in this region have demonstrated that square mesh selects for larger individuals of roundfish species than diamond mesh of the same size. By experimentally fishing with different combinations of codend mesh the applicants hope to determine if any combination effectively increases catch of the underharvested healthy stocks without negatively affecting other stocks. Any promising combinations could be further evaluated through a subsequent rigorous scientific study.

In addition to the standard redfish sector exemption, vessels fishing under the MREM EFP are permitted to use a 5.1-inch (13-cm) square mesh codend in tandem with a haddock separator device or Ruhle trawl (similar to the configuration used in Canada) on Georges Bank, or a 4.5-inch (11.4-cm) diamond mesh codend (based on the REDNET project) when fishing under the redfish exemption. The 5.1-inch (13-cm) square mesh exemption is intended to increase the catch of haddock, while the 4.5-inch (11.4-cm) diamond mesh exemption is intended to increase the efficiency of reddfish catch.

Similar to redfish, pollock and Gulf of Maine haddock are healthy stocks that have been underharvested in recent years. These two stocks are sometimes encountered with schools of redfish around the steep ledges in the Gulf of Maine. According to the application, the rocky bottom in this area is incompatible with the separator and Ruhle trawls. Further, the application asserts that 4.5-inch (11.4-cm) diamond mesh is effective at retaining redfish, but allows legal-sized haddock to escape. Mesh selectivity information shows that the 50-percent retention rate for haddock of the minimum size (16 inches; 40.6 cm) in square mesh is approximately 4.5 inches (11.4 cm). This EFP amendment would both: Expand the MREM program to refine and test on-board handling requirements, dockside monitoring protocols, and video review for high volume vessels; and conduct exploratory fishing to test the potential for alternative gear configurations to provide additional opportunities to target healthy stocks.

The applicants anticipate that during fishing year 2020 the participating vessel will conduct approximately 25–30 multiday trips in the requested area. Typical trips would be 7 to 10 days in duration with 5 to 8 days of fishing on each trip. The estimated catch provided in the application, based on previous performance of the subject vessel, is in Table 3.

TABLE 3—CATCH COMPOSITION ESTIMATES

Species	Estimated annual catch in live lb (kg)	
	Legal-sized catch	Sub-legal size catch
Acadian Redfish	1,250,000 (2,750,000)	14,265 (31,383)
American Plaice	2,000 (4,400)	5,370 (11,814)
Atlantic Cod	8,036 (11,679)	744 (1,637)
Gulf of Maine Cod	893 (1,965)	176 (387)
Georges Bank West Cod	7,143 (15,715)	568 (1,250)
Georges Bank East Cod	0 (0)	0 (0)
Atlantic Halibut	150 (330)	250 (550)
Atlantic Wolffish	0 (0)	36 (79)
Haddock	750,000 (1,650,000)	3,742 (8,232)
Ocean Pout	0 (0)	1 (2)
Pollock	500,000 (1,100,000)	1,541 (3,390)
White Hake	8,929 (19,643)	0 (0)
Witch Flounder	3,571 (7,856)	674 (1,483)
Windowpane Flounder	0 (0)	0 (0)
Winter Flounder	1,500 (3,300)	0 (0)
Yellowtail Flounder	100 (220)	0 (0)

If approved, the applicant may request minor modifications and extensions to the EFP throughout the year. EFP modifications and extensions may be granted without further notice if they are deemed essential to facilitate completion of the proposed research and have minimal impacts that do not change the scope or impact of the initially approved EFP request. Any fishing activity conducted outside the scope of the exempted fishing activity would be prohibited.

Authority: 16 U.S.C. 1801 *et seq.*

Dated: October 27, 2020.

Jennifer M. Wallace,

Acting Director, Office of Sustainable Fisheries, National Marine Fisheries Service.

[FR Doc. 2020–24206 Filed 10–30–20; 8:45 am]

BILLING CODE 3510–22–P

DEPARTMENT OF COMMERCE

National Oceanic and Atmospheric Administration

[RTID 0648–XA607]

Mid-Atlantic Fishery Management Council (MAFMC); Public Meetings

AGENCY: National Marine Fisheries Service (NMFS), National Oceanic and Atmospheric Administration (NOAA), Commerce.

ACTION: Notice; public meetings.

SUMMARY: The Mid-Atlantic Fishery Management Council (Council) will hold two online workshops for a project using video recordings to examine recreational fishing effort originating from Ocean City, MD.

DATES: The meetings will be held on Tuesday November 17, 2020 and Tuesday December 1, 2020, both from 5:30 p.m. to 8 p.m. For agenda details, see **SUPPLEMENTARY INFORMATION.**

ADDRESSES: The meetings will be held via online webinar, with connection information available via the Council's website at *www.mafmc.org.*

Council address: Mid-Atlantic Fishery Management Council, 800 N State Street, Suite 201, Dover, DE 19901; telephone: (302) 674–2331 or on their website at *www.mafmc.org.*

FOR FURTHER INFORMATION CONTACT: Christopher M. Moore, Ph.D., Executive Director, Mid-Atlantic Fishery Management Council, telephone: (302) 526–5255.

SUPPLEMENTARY INFORMATION: The purpose of the meetings is to develop methods for using video to examine the recreational fishing effort in ocean waters that departs from Ocean City, MD.

Special Accommodations

The meetings are physically accessible to people with disabilities. Requests for sign language interpretation or other auxiliary aid should be directed to M. Jan Saunders, (302) 526–5251, at least 5 days prior to any meeting date.

Authority: 16 U.S.C. 1801 *et seq.*

Dated: October 28, 2020.

Tracey L. Thompson,

Acting Deputy Director, Office of Sustainable Fisheries, National Marine Fisheries Service.

[FR Doc. 2020–24215 Filed 10–30–20; 8:45 am]

BILLING CODE 3510–22–P

DEPARTMENT OF COMMERCE

National Oceanic and Atmospheric Administration

[RTID 0648–XA610]

New England Fishery Management Council; Public Meeting

AGENCY: National Marine Fisheries Service (NMFS), National Oceanic and Atmospheric Administration (NOAA), Commerce.

ACTION: Notice of public meeting.

SUMMARY: The New England Fishery Management Council (Council) is scheduling a joint public meeting of its Whiting Joint Committee and Advisory Panel via webinar to consider actions affecting New England fisheries in the exclusive economic zone (EEZ). Recommendations from this group will be brought to the full Council for formal consideration and action, if appropriate.

DATES: This webinar will be held on Monday, November 16, 2020 at 9.30 a.m. Webinar registration URL information: *https://attendee.gotowebinar.com/register/7403653215518712077.*

ADDRESSES: *Council address:* New England Fishery Management Council, 50 Water Street, Mill 2, Newburyport, MA 01950.

FOR FURTHER INFORMATION CONTACT: Thomas A. Nies, Executive Director, New England Fishery Management Council; telephone: (978) 465–0492.

SUPPLEMENTARY INFORMATION:

Agenda

The Whiting Committee and Advisory Panel will receive a preliminary Annual Monitoring Report and management recommendations from the Whiting Plan Development Team, including a summary of the management track assessment results, catch limit recommendations, fishery performance for fishing year 2019, updated economic summary data, 2017–19 bycatch estimates, and other items. They will also receive a preliminary report on the SSC recommendations for 2021–23 specifications. The Committee and Advisory Panel will provide advice for the annual monitoring report and develop management recommendations for the 2021–23 specifications package to be considered at the December 2020 Council Meeting and approved at the January 2021 Council meetings. Other business will be discussed if necessary.

Although non-emergency issues not contained on the agenda may come before this Council for discussion, those issues may not be the subject of formal action during this meeting. Council action will be restricted to those issues specifically listed in this notice and any issues arising after publication of this notice that require emergency action under section 305(c) of the Magnuson-Stevens Act, provided the public has been notified of the Council's intent to take final action to address the emergency. The public also should be aware that the meeting will be recorded. Consistent with 16 U.S.C. 1852, a copy of the recording is available upon request.

Special Accommodations

This meeting is physically accessible to people with disabilities. Requests for sign language interpretation or other auxiliary aids should be directed to Thomas A. Nies, Executive Director, at (978) 465–0492, at least 5 days prior to the meeting date.

Authority: 16 U.S.C. 1801 *et seq.*

Dated: October 28, 2020.

Tracey L. Thompson,

Acting Deputy Director, Office of Sustainable Fisheries, National Marine Fisheries Service.

[FR Doc. 2020–24220 Filed 10–30–20; 8:45 am]

BILLING CODE 3510–22–P

DEPARTMENT OF COMMERCE

National Oceanic and Atmospheric Administration

[RTID 0648–XA609]

North Pacific Fishery Management Council; Public Meetings

AGENCY: National Marine Fisheries Service (NMFS), National Oceanic and Atmospheric Administration (NOAA), Commerce.

ACTION: Notice of public meetings.

SUMMARY: A series of Economic Data Reporting (EDR) Stakeholder Discussions will be held on November 16, 2020, November 17, 2020, November 23, 2020, and November 24, 2020.

DATES: The meetings will be held via webconferences on Monday, November 16, 2020, Tuesday, November 17, 2020, Monday, November 23, 2020, and Tuesday, November 24, 2020, from 9 a.m. to 11 a.m., Alaska Time.

ADDRESSES: The meeting will be a webconference. Join online through the link at *https://meetings.npfmc.org/Meeting/Details/1765.*

Council address: North Pacific Fishery Management Council, 1007 W 3rd Ave., Anchorage, AK 99501–2252; telephone: (907) 271–2809. Instructions for attending the meeting are given

under **SUPPLEMENTARY INFORMATION**, below.

FOR FURTHER INFORMATION CONTACT: Sarah Marrinan, Council staff; phone; (907) 271–2809 and email: *sarah.marrinan@noaa.gov.* For technical support please contact our administrative staff; email: *npfmc.admin@noaa.gov.*

SUPPLEMENTARY INFORMATION:

Agenda

Monday, November 16, 2020—Amendment 80 EDR

Tuesday, November 17, 2020—Bering Sea Aleutian Islands Crab Rationalization EDR

Monday, November 23, 2020—Amendment 91 Chinook Salmon EDR

Tuesday, November 24, 2020—Gulf of Alaska Trawl EDR

A series of EDR-specific stakeholder meetings will cover questions related to the relative burden of the data collections and concepts for improving their usability. The agenda for each meeting will introduce questions and provide opportunities for comment on proposed smaller and larger revisions specific to each EDR.The agenda is subject to change, and the latest version will be posted at *https://meetings.npfmc.org/Meeting/Details/1765* prior to the meeting, along with meeting materials.

Connection Information

You can attend the meeting online using a computer, tablet, or smart phone; or by phone only. Connection information will be posted online at: *https://meetings.npfmc.org/Meeting/Details/1765.*

Public Comment

Public comment letters will be accepted and should be submitted electronically to *https://meetings.npfmc.org/Meeting/Details/1765.*

Authority: 16 U.S.C. 1801 *et seq.*

Dated: October 28, 2020.

Tracey L. Thompson,

Acting Deputy Director, Office of Sustainable Fisheries, National Marine Fisheries Service.

[FR Doc. 2020–24214 Filed 10–30–20; 8:45 am]

BILLING CODE 3510–22–P

DEPARTMENT OF COMMERCE

National Oceanic and Atmospheric Administration

Draft Revised Management Plan for the Lake Superior National Estuarine Research Reserve

AGENCY: Office for Coastal Management, National Ocean Service, National Oceanic and Atmospheric Administration, Department of Commerce.

ACTION: Request for comments on draft revised management plan.

SUMMARY: The National Oceanic and Atmospheric Administration (NOAA) is soliciting comments from the public regarding a proposed revision of the management plan for the Lake Superior National Estuarine Research Reserve. A management plan: Provides a framework for the direction and timing of a reserve's programs; allows reserve managers to assess a reserve's success in meeting its goals and to identify any necessary changes in direction; and is used to guide programmatic evaluations of the reserve. Plan revisions are required of each reserve in the National Estuarine Research Reserve System at least every five years. This revised plan is intended to replace the plan approved in 2010.

DATES: Comments must be received at the appropriate address (see **ADDRESSES**) on or before December 2, 2020.

ADDRESSES: The draft revised management plan can be downloaded or viewed at: *https://lakesuperiorreserve.org/management-plan/.* The document is also available by sending a written request to the point of contact identified below (see **FOR FURTHER INFORMATION**).

You may submit comments by any of the following methods:

Electronic Submission: Submit all electronic public comments by email to *Elizabeth.Mountz@noaa.gov.*

Mail: Submit written comments to Elizabeth Mountz, Office for Coastal Management, 1305 East-West Highway, N/ORM, 10th Floor, Silver Spring, MD 20910. Comments submitted by any other method or after the comment period may not be considered. All comments are part of the public record and may be publicly accessible. Any personal identifying information (*e.g.,* name, address) submitted voluntarily by the sender may also be accessible. NOAA will accept anonymous comments.

FOR FURTHER INFORMATION CONTACT: Elizabeth Mountz of NOAA's Office for Coastal Management, by email at *Elizabeth.Mountz@noaa.gov,* phone at 240–533–0819, or mail at: 1305 East-West Highway, N/ORM, 10th Floor, Silver Spring, MD 20910.

SUPPLEMENTARY INFORMATION: Pursuant to 15 CFR 921.33(c), a state must revise the management plan for the research reserve at least every five years. If approved by NOAA, the Lake Superior National Estuarine Research Reserve's revised plan will replace the plan previously approved in 2010.

The draft revised management plan outlines the reserve's: Strategic goals and objectives; administrative structure; programs for conducting research and monitoring, education, and training; resource protection, restoration, and manipulation plans; public access and visitor use plans; consideration for future land acquisition; and facility development to support reserve operations. In particular, this draft revised management plan focuses on changes to facilities through acquiring permanent housing for visiting students and researchers; growing the sectors by structurally supporting additional staff; advancing geographic information systems (GIS) and data management priorities; and developing a formal advisory board and strategic relationships with the private sector in the region.

Since 2010, the reserve has acquired permanent facilities for the reserve's operations; hired core sector leads and support staff; opened a public interpretive center and classroom; and expanded formal partnerships in research and education across the region. The revised management plan, once approved, would serve as the guiding document for the 16,697-acre research reserve for the next five years.

NOAA's Office for Coastal Management analyzes the environmental impacts of the proposed approval of this draft revised management plan in accordance with section 102(2)(C) of the National Environmental Policy Act of 1969, as amended, 42 U.S.C. 4332(2)(C), and the Council on Environmental Quality Regulations for Implementing the Procedural Provisions of NEPA (40 CFR 1500–1508). The public is invited to comment on the draft revised management plan. NOAA will take these comments into consideration in deciding whether to approve the draft revised management plan in whole or in part.

Authority: 16 U.S.C. 1451 *et seq.;* 15 CFR 921.33.

Keelin S. Kuipers,

Deputy Director, Office for Coastal Management, National Ocean Service, National Oceanic and Atmospheric Administration.

[FR Doc. 2020–24190 Filed 10–30–20; 8:45 am]

BILLING CODE 3510–NK–P

DEPARTMENT OF COMMERCE

National Technical Information Service

Agency Information Collection Activities; Submission to the Office of Management and Budget (OMB) for Review and Approval; Extension of Currently Approved Information Collection; Comment Request; Limited Access Death Master File Systems Safeguards Attestation Forms

The Department of Commerce will submit the following information collection request to the Office of Management and Budget (OMB) for review and clearance in accordance with the Paperwork Reduction Act of 1995, on or after the date of publication of this notice. We invite the general public and other Federal agencies to comment on proposed, and continuing information collections, which helps us assess the impact of our information collection requirements and minimize the public's reporting burden. Public comments were previously requested via the **Federal Register** on June 29, 2020 during a 60-day comment period. This notice allows for an additional 30 days for public comments.

Agency: National Technical Information Service (NTIS), Commerce.

Title: NTIS Limited Access Death Master Files (LADMF) Systems Safeguards Attestation Forms.

(A) Limited Access Death Master File (LADMF) Accredited Conformity Assessment Body Systems Safeguards Attestation Form'' (ACAB Systems Safeguards Attestation Form)

(B) Limited Access Death Master File (LADMF) State or Local Government Auditor General (AG) or Inspector General (IG) Systems Safeguards Attestation Form'' (AG or IG Systems Safeguards Attestation Form)

OMB Control Number: 0692–0016.

Form Number(s): NTIS FM100A and NTIS FM100B.

Type of Request: Extension of a currently approved information collection.

Number of Respondents: NTIS expects to receive approximately 280 applications and renewals for certification every three (3) years for access to the Limited Access Death Master File.

Average Hours per Response: 3 hours.

Burden Hours: 840.

Needs and Uses: NTIS issued a final rule (15 CFR part 1110) establishing a program through which persons may become eligible to obtain access to Death Master File (DMF) information about an individual within three years of that individual's death. The final rule was promulgated under Section 203 of the Bipartisan Budget Act of 2013, Public Law 113–67 (Act). The Act prohibits the Secretary of Commerce (Secretary) from disclosing DMF information during the three-year period following an individual's death (Limited Access DMF), unless the person requesting the information has been certified to access the Limited Access DMF pursuant to certain criteria in a program that the Secretary establishes. The Secretary delegated the authority to carry out Section 203 to the Director of NTIS.

To accommodate the requirements of the final rule, NTIS is using both the ACAB Systems Safeguards Attestation Form and the AG or IG Systems Safeguards Attestation Form. The ACAB Systems Safeguards Attestation Form requires an ''Accredited Conformity Assessment Body'' (ACAB), as defined in the final rule, to attest that a Person seeking certification or a Certified Person seeking renewal of certification has information security systems, facilities and procedures in place to protect the security of the Limited Access DMF, as required under Section 1110.102(a)(2) of the final rule. The ACAB Systems Safeguards Attestation Form collects information based on an assessment by the ACAB conducted within three years prior to the date of the Person or Certified Person's submission of a completed certification statement under Section 1110.101(a) of the final rule. This collection includes specific requirements of the final rule, which the ACAB must certify are satisfied, and the provision of specific information by the ACAB, such as the date of the assessment and the auditing standard(s) used for the assessment.

Section 1110.501(a)(2) of the final rule provides that a state or local government office of AG or IG and a Person or Certified Person that is a department or agency of the same state or local government, respectively, are not considered to be owned by a common ''parent'' entity under Section 1110.501(a)(1)(ii) for the purpose of determining independence, and attestation by the AG or IG is possible. The AG or IG Systems Safeguards Attestation Form is for the use of a state or local government AG or IG to attest on behalf of a state or local government department or agency Person or Certified Person. The AG or IG Systems Safeguards Attestation Form requires the state or local government AG or IG to attest that a Person seeking certification or a Certified Person seeking renewal of certification has information security systems, facilities and procedures in place to protect the security of the Limited Access DMF, as required under Section 1110.102(a)(2) of the final rule. The AG or IG Systems Safeguards Attestation Form collects information based on an assessment by the state or local government AG or IG conducted within three years prior to the date of the Person or Certified Person's submission of a completed certification statement under Section 1110.101(a) of the final rule. This collection includes specific requirements of the final rule, which the state or local government AG or IG must certify are satisfied, and the provision of specific information by the state or local government AG or IG, such as the date of the assessment.

Affected Public: Accredited Conformity Assessment Bodies and state or local government Auditors General or Inspectors General attesting that a Person seeking certification or a Certified Person seeking renewal of certification under the final rule for the ''Certification Program for Access to the Death Master File'' has information security systems, facilities and procedures in place to protect the security of the Limited Access DMF, as required by the final rule.

Frequency: Every three (3) years.

Respondent's Obligation: Voluntary.

Legal Authority: Section 203 of the Bipartisan Budget Act of 2013, Public Law 113–67.

This information collection request may be viewed at *reginfo.gov.* Follow the instructions to view Department of Commerce collections currently under review by OMB.

Written comments and recommendations for the proposed information collection should be sent within 30 days of publication of this notice on the following website *www.reginfo.gov/public/do/PRAMain.* Find this particular information collection by selecting ''Currently under 30-day Review—Open for Public Comments'' or by using the search function and entering either the title of

the collection or the OMB control number 0692–0016.

Sheleen Dumas,

Department PRA Clearance Officer, Office of the Chief Information Officer, Commerce Department.

[FR Doc. 2020–24177 Filed 10–30–20; 8:45 am]

BILLING CODE 3510–13–P

COMMODITY FUTURES TRADING COMMISSION

Sunshine Act Meetings

FEDERAL REGISTER CITATION OF PREVIOUS ANNOUNCEMENT: 85 FR 68566, October 29, 2020.

PREVIOUSLY ANNOUNCED TIME AND DATE OF THE MEETING: 9:30 a.m. EST, Monday, November 2, 2020.

CHANGES IN THE MEETING: The time of the meeting has changed. This meeting will now start at 10:00 a.m. EST.

CONTACT PERSON FOR MORE INFORMATION: Christopher Kirkpatrick, 202–418–5964.

Authority: 5 U.S.C. 552b.

Dated: October 29, 2020.

Christopher Kirkpatrick,

Secretary of the Commission.

[FR Doc. 2020–24315 Filed 10–29–20; 11:15 am]

BILLING CODE 6351–01–P

DEPARTMENT OF DEFENSE

Defense Acquisition Regulations System

[Docket Number DARS–2020–0037; OMB Control Number 0704–0390]

Information Collection Requirement; Defense Federal Acquisition Regulation Supplement (DFARS) Part 229, Taxes, and Related Clause at DFARS 252.229–7010

AGENCY: Defense Acquisition Regulations System, Department of Defense (DoD).

ACTION: Notice and request for comments regarding a proposed revision and extension of an approved information collection requirement.

SUMMARY: In compliance with the Paperwork Reduction Act of 1995, DoD announces the proposed revision and extension of a public information collection requirement and seeks public comment on the provisions thereof. *DoD invites comments on:* Whether the proposed collection of information is necessary for the proper performance of the functions of DoD, including whether the information will have practical utility; the accuracy of the estimate of the burden of the proposed information collection; ways to enhance the quality, utility, and clarity of the information to be collected; and ways to minimize the burden of the information collection on respondents, including the use of automated collection techniques or other forms of information technology. The Office of Management and Budget (OMB) has approved this information collection requirement for use through January 31, 2021. DoD proposes that OMB extend its approval for three additional years.

DATES: DoD will consider all comments received by January 4, 2021.

ADDRESSES: You may submit comments, identified by OMB Control Number 0704–0390, using any of the following methods:

○ *Federal eRulemaking Portal: http://www.regulations.gov.* Follow the instructions for submitting comments.

○ *Email: osd.dfars@mail.mil.* Include OMB Control Number 0704–0390 in the subject line of the message.

○ *Mail:* Defense Acquisition Regulations System, Attn: Ms. Amy Williams, OUSD(A&S)DPC/DARS, Room 3B938, 3060 Defense Pentagon, Washington, DC 20301–3060.

Comments received generally will be posted without change to *http://www.regulations.gov,* including any personal information provided.

FOR FURTHER INFORMATION CONTACT: Ms. Amy Williams, (571) 372–6106.

SUPPLEMENTARY INFORMATION:

Title and OMB Number: Defense Federal Acquisition Regulation Supplement (DFARS) Part 229, Taxes, and related clause at DFARS 252.229–7010; OMB Control Number 0704–0390.

Type of Request: Revision and extension.

Affected Public: Businesses or other for-profit and not-for-profit institutions.

Respondent's Obligation: Required to obtain or retain benefits.

Number of Respondents: 12.

Responses per Respondent: 2.33, approximately.

Annual Responses: 28.

Average Burden per Response: 4 hours.

Annual Burden Hours: 112.

Reporting Frequency: On occasion.

Needs and Uses: DoD uses this information to determine if DoD contractors in the United Kingdom have attempted to obtain relief from customs duty on vehicle fuels in accordance with contract requirements. The clause at DFARS 252.229–7010, Relief from Customs Duty on Fuel (United Kingdom), is prescribed at DFARS 229.402–70(j) for use in solicitations issued and contracts awarded in the United Kingdom that require the use of fuels (gasoline or diesel) and lubricants in taxis or vehicles other than passenger vehicles. The clause requires the contractor to provide the contracting officer with evidence that the contractor has initiated an attempt to obtain relief from customs duty on fuels and lubricants, as permitted by an agreement between the United States and the United Kingdom.

Jennifer D. Johnson,

Regulatory Control Officer, Defense Acquisition Regulations System.

[FR Doc. 2020–24149 Filed 10–30–20; 8:45 am]

BILLING CODE 5001–06–P

DEPARTMENT OF DEFENSE

Office of the Secretary

Defense Business Board; Notice of Federal Advisory Committee Meeting AGENCY: Chief Management Officer, Department of Defense (DoD).

ACTION: Notice of Federal Advisory Committee meeting.

SUMMARY: The DoD is publishing this notice to announce that the following Federal Advisory Committee meeting of the Defense Business Board will take place. DATES: Open to the public Tuesday, November 10, 2020 from 3:00 to 5:30 p.m.

ADDRESSES: Due to the current guidance on combating the Coronavirus, the meeting will be conducted virtually or by teleconference only. To participate in the meeting, see the Meeting Accessibility section for instructions.

FOR FURTHER INFORMATION CONTACT: Jennifer Hill, 703–614–1834 (Voice), (Facsimile), *jennifer.s.hill4.civ@mail.mil* (Email). Mailing address is Defense Business Board, 1155 Defense Pentagon, Room 5B1088A, Washington, DC 20301–1155. Website: *http://dbb.defense.gov/.* The most up-to-date changes to the meeting agenda can be found on the website.

SUPPLEMENTARY INFORMATION: Due to circumstances beyond the control of the Department of Defense and the Designated Federal Officer for the Defense Business Board, the Defense Business Board was unable to provide public notification required by 41 CFR 102–3.150(a) concerning its November 10, 2020 meeting. Accordingly, the Advisory Committee Management Officer for the Department of Defense, pursuant to 41 CFR 102–3.150(b), waives the 15-calendar day notification requirement.

This meeting is being held under the provisions of the Federal Advisory

Committee Act (FACA) of 1972 (5 U.S.C., Appendix, as amended), the Government in the Sunshine Act of 1976 (5 U.S.C. 552b, as amended), and 41 CFR 102–3.140 and 102–3.150.

Purpose of the Meeting: The mission of the Board is to examine and advise the Secretary of Defense on overall DoD management and governance. The Board provides independent advice reflecting an outside private sector perspective on proven and effective best business practices that can be applied to DoD.

Agenda: The Board will receive presentations for deliberation, comment, and vote on two task group studies: ''Audit/Performance Data Usage in Private Industry,'' chaired by Dr. Christopher Gopal, and ''Defense Logistics Agency/Defense Information Systems Agency Charter Review,'' chaired by VADM David Venlet, USN (Ret). The final agenda will be available prior to the meeting on the Board's website at: *https://dbb.defense.gov/Meetings/Meeting-November-2020/.*

Meeting Accessibility: Pursuant to Federal Advisory Committee Act and 41 CFR 102–3.140, this meeting is open to the public. Persons desiring to participate in the meeting are required to register. Attendance will be by virtual or teleconference only. To attend the meeting submit your name, affiliation/organization, telephone number, and email contact information to the Board at *osd.pentagon.odam.mbx.defense-business-board@mail.mil.* Requests to attend the meeting must be received not later than 4:00 p.m. Eastern Standard Time, on Friday, October 30, 2020. Upon receipt of this information, a link will be sent to the email address provided which will allow virtual/teleconference attendance to the event. (The DBB will be unable to provide technical assistance to any user experiencing technical difficulties during the meeting.)

Written Statements: Pursuant to 41 CFR 102–3.105(j) and 102–3.140 and section 10(a)(3) of the Federal Advisory Committee Act, the public or interested organizations may submit written comments or statements to the Board in response to the stated agenda of the open meeting or in regard to the Board's mission in general. Written comments or statements should be submitted to Ms. Jennifer Hill, the Designated Federal Officer, via electronic mail, the preferred mode of submission, at the address listed in the **FOR FURTHER INFORMATION CONTACT** section. Each page of the comment or statement must include the author's name, title or affiliation, address, and daytime phone number. Written comments or statements being submitted in response to the agenda set forth in this notice must be received by the Designated Federal Officer at least seven (7) business days prior to the meeting to be considered by the Board. The Designated Federal Officer will review all timely submitted written comments or statements with the Board Chair, and ensure the comments are provided to all members of the Board before the meeting. Written comments or statements received after this date may not be provided to the Board until its next meeting. Pursuant to 41 CFR 102–3.140d, the Board is not obligated to allow any member of the public to speak or otherwise address the Board during the meeting. Members of the public will be permitted to make verbal comments during the meeting only at the time and in the manner described below. If a member of the public is interested in making a verbal comment at the open meeting, that individual must submit a request, with a brief statement of the subject matter to be addressed by the comment, at least three (3) business days in advance to the Designated Federal Officer, via electronic mail, the preferred mode of submission, at the addresses listed in the **FOR FURTHER INFORMATION CONTACT** section. The Designated Federal Officer will log each request, in the order received, and in consultation with the Board Chair determine whether the subject matter of each comment is relevant to the Board's mission and/or the topics to be addressed in the public meeting. Members of the public who have requested to make a comment and whose comments have been deemed relevant under the process described above will be invited to speak in the order in which the Designated Federal Officer received their requests. The Board Chair may allot a specific amount of time for comments. Please note that all submitted comments and statements will be treated as public documents and will be made available for public inspection, including, but not limited to, being posted on the Board's website.

Dated: October 27, 2020.

Aaron T. Siegel,

Alternate OSD Federal Register Liaison Officer, Department of Defense.

[FR Doc. 2020–24192 Filed 10–30–20; 8:45 am]

BILLING CODE 5001–06–P

DEPARTMENT OF DEFENSE

Department of the Army, Corps of Engineers

Inland Waterways Users Board; Request for Nominations

AGENCY: Department of the Army, U.S. Army Corps of Engineers, DOD.

ACTION: Notice of request for nominations.

SUMMARY: The Department of the Army is publishing this notice to request nominations to serve as representatives on the Inland Waterways Users Board, sponsored by the U.S. Army Corps of Engineers. Section 302 of Public Law 99–662 established the Inland Waterways Users Board. The Board is an independent Federal advisory committee. The Secretary of the Army appoints its 11 (eleven) representative organizations. This notice is to solicit nominations for five (5) appointments for terms that will begin by May 28, 2021. For additional information about the Board, please visit the committee's website at *http://www.iwr.usace.army.mil/Missions/Navigation/Inland-Waterways-Users-Board/.*

ADDRESSES: Institute for Water Resources, U.S. Army Corps of Engineers, ATTN: Mr. Mark R. Pointon, Designated Federal Officer (DFO) for the Inland Waterways Users Board, CEIWR–GN, 7701 Telegraph Road, Casey Building, Alexandria, Virginia 22315–3868; by telephone at 703–428–6438; and by email at *Mark.Pointon@usace.army.mil.*

FOR FURTHER INFORMATION CONTACT: Alternatively, contact Mr. Steven D. Riley, the Alternate Designated Federal Officer (ADFO), in writing at the Institute for Water Resources, U.S. Army Corps of Engineers, ATTN: CEIWR–GW, 7701 Telegraph Road, Casey Building, Alexandria, VA 22315–3868; by telephone at 703–659–3097; and by email at *Steven.D.Riley@usace.army.mil.*

SUPPLEMENTARY INFORMATION: The selection, service, and appointment of representative organizations to the Board are covered by provisions of Section 302 of Public Law 99–662. The substance of those provisions is as follows:

a. Selection. Representative organizations are to be selected from the spectrum of commercial carriers and shippers using the inland and intracoastal waterways, to represent geographical regions, and to be representative of waterborne commerce as determined by commodity ton-miles and tonnage statistics.

b. Service. The Board is required to meet at least semi-annually to develop and make recommendations to the Secretary of the Army on waterways construction and major rehabilitation priorities and spending levels for commercial navigation improvements, and report its recommendations annually to the Secretary and Congress.

c. Appointment. The operation of the Board and appointment of representative organizations are subject to the Federal Advisory Committee Act of 1972 (5 U.S.C., Appendix, as amended) and departmental implementing regulations. Representative organizations serve without compensation but their expenses due to Board activities are reimbursable. The considerations specified in Section 302 for the selection of representative organizations to the Board, and certain terms used therein, have been interpreted, supplemented, or otherwise clarified as follows:

(1) Carriers and Shippers. The law uses the terms ''primary users and shippers.'' Primary users have been interpreted to mean the providers of transportation services on inland waterways such as barge or towboat operators. Shippers have been interpreted to mean the purchasers of such services for the movement of commodities they own or control. Representative companies are appointed to the Board, and they must be either a carrier or shipper or both. For that purpose a trade or regional association is neither a shipper nor primary user.

(2) Geographical Representation. The law specifies ''various'' regions. For the purposes of the Board, the waterways subjected to fuel taxes and described in Public Law 95–502, as amended, have been aggregated into six regions. They are (1) the Upper Mississippi River and its tributaries above the mouth of the Ohio; (2) the Lower Mississippi River and its tributaries below the mouth of the Ohio and above Baton Rouge; (3) the Ohio River and its tributaries; (4) the Gulf Intracoastal Waterway in Louisiana and Texas; (5) the Gulf Intracoastal Waterway east of New Orleans and associated fuel-taxed waterways including the Tennessee-Tombigbee, plus the Atlantic Intracoastal Waterway below Norfolk; and (6) the Columbia-Snake Rivers System and Upper Willamette. The intent is that each region shall be represented by at least one representative organization, with that representation determined by the regional concentration of the firm's traffic on the waterways.

(3) Commodity Representation. Waterway commerce has been aggregated into six commodity categories based on ''inland'' ton-miles shown in Waterborne Commerce of the United States. These categories are (1) Farm and Food Products; (2) Coal and Coke; (3) Petroleum, Crude and Products; (4) Minerals, Ores, and Primary Metals and Mineral Products; (5) Chemicals and Allied Products; and (6) All Other. A consideration in the selection of representative organizations to the Board will be that the commodities carried or shipped by those firms will be reasonably representative of the above commodity categories.

d. Nomination. Reflecting preceding selection criteria, the current representation by the five (5) organizations whose terms expire includes Regions 1, 3 and 4, representation of two carriers, two shippers and one of both, and commodity representation of Coal and Coke; Petroleum, Crude and Products; Chemicals and Allied Products; and Other.

Individuals, firms or associations may nominate representative organizations to serve on the Board. Nominations will:

(1) Include the commercial operations of the carrier and/or shipper representative organization being nominated. This commercial operations information will show the actual or estimated ton-miles of each commodity carried or shipped on the inland waterways system in the most recent year (or years), using the waterway regions and commodity categories previously listed.

(2) State the region(s) to be represented.

(3) State whether the nominated representative organization is a carrier, shipper or both.

(4) Provide the name of an individual to be the principle person representing the organization and information pertaining to their personal qualifications, to include a current biography or resume.

Previous nominations received in response to notices published in the **Federal Register** in prior years will not be retained for consideration. Re-nomination of representative organizations is required.

e. *Deadline for Nominations.* All nominations must be received at the address shown above no later than December 1, 2020.

Thomas P. Smith,

Chief, Operations and Regulatory Division, Directorate of Civil Works, U.S. Army Corp of Engineers.

[FR Doc. 2020–24197 Filed 10–30–20; 8:45 am]

BILLING CODE 3720–58–P

DEPARTMENT OF EDUCATION

[Docket No.: ED–2020–SCC–0122]

Agency Information Collection Activities; Submission to the Office of Management and Budget for Review and Approval; Comment Request; Higher Education Emergency Relief Fund (HEERF) Data Collection Form

AGENCY: Office of Postsecondary Education, Department of Education (ED).

ACTION: Notice.

SUMMARY: In accordance with the Paperwork Reduction Act of 1995, ED is proposing a new collection.

DATES: Interested persons are invited to submit comments on or before December 2, 2020.

ADDRESSES: Written comments and recommendations for proposed information collection requests should be sent within 30 days of publication of this notice to *www.reginfo.gov/public/do/PRAMain.* Find this particular information collection request by selecting ''Department of Education'' under ''Currently Under Review,'' then check ''Only Show ICR for Public Comment'' checkbox.

FOR FURTHER INFORMATION CONTACT: For specific questions related to collection activities, please contact Karen Epps, 202–453–6337.

SUPPLEMENTARY INFORMATION: The Department of Education (ED), in accordance with the Paperwork Reduction Act of 1995 (PRA) (44 U.S.C. 3506(c)(2)(A)), provides the general public and Federal agencies with an opportunity to comment on proposed, revised, and continuing collections of information. This helps the Department assess the impact of its information collection requirements and minimize the public's reporting burden. It also helps the public understand the Department's information collection requirements and provide the requested data in the desired format. ED is soliciting comments on the proposed information collection request (ICR) that is described below. The Department of Education is especially interested in public comment addressing the following issues: (1) Is this collection necessary to the proper functions of the Department; (2) will this information be processed and used in a timely manner; (3) is the estimate of burden accurate; (4) how might the Department enhance the quality, utility, and clarity of the information to be collected; and (5) how might the Department minimize the burden of this collection on the respondents, including through the use

of information technology. Please note that written comments received in response to this notice will be considered public records.

Title of Collection: Higher Education Emergency Relief Fund (HEERF) Data Collection Form.

OMB Control Number: 1840–NEW.

Type of Review: A new information collection.

Respondents/Affected Public: State, Local, and Tribal Governments; Private Sector.

Total Estimated Number of Annual Responses: 5,170.

Total Estimated Number of Annual Burden Hours: 31,020.

Abstract: This information collection supports the annual collection of data pertaining to the uses of funds under the Higher Education Emergency Education Relief Fund (HEER Fund). Section 18004(a) of the CARES Act, Public Law 116–136 (March 27, 2020), authorized the Secretary of Education to allocate formula grant funds to participating institutions of higher education (IHEs). Section 18004(c) of the CARES Act allows IHEs to use up to one-half of the total funds received to cover any costs associated with the significant changes to the delivery of instruction due to the coronavirus (with specific exceptions). This information collection request includes the reporting requirements in order to comply with the requirements of the CARES Act and obtain information on how the funds were used. The information will be reviewed by U.S. Department of Education (Department) employees to ensure that HEER funds are used in accordance with section 18004 of the CARES Act, and will be shared with the public to promote transparency regarding the allocation and uses of funds.

Dated: October 27, 2020.

Kate Mullan,

PRA Coordinator, Strategic Collections and Clearance, Governance and Strategy Division, Office of Chief Data Officer, Office of Planning, Evaluation and Policy Development.

[FR Doc. 2020–24170 Filed 10–30–20; 8:45 am]

BILLING CODE 4000–01–P

DEPARTMENT OF EDUCATION

[Docket No.: ED–2020–SCC–0123]

Agency Information Collection Activities; Submission to the Office of Management and Budget for Review and Approval; Comment Request; Education Stabilization Fund—Governor's Emergency Education Relief Fund (GEER) Recipient Data Collection Form

AGENCY: Office of Elementary and Secondary Education, Department of Education (ED).

ACTION: Notice.

SUMMARY: In accordance with the Paperwork Reduction Act of 1995, ED is proposing a new information collection.

DATES: Interested persons are invited to submit comments on or before December 2, 2020.

ADDRESSES: Written comments and recommendations for proposed information collection requests should be sent within 30 days of publication of this notice to *www.reginfo.gov/public/do/PRAMain.* Find this particular information collection request by selecting ''Department of Education'' under ''Currently Under Review,'' then check ''Only Show ICR for Public Comment'' checkbox.

FOR FURTHER INFORMATION CONTACT: For specific questions related to collection activities, please contact Gloria Tanner, 202–453–5596.

SUPPLEMENTARY INFORMATION: The Department of Education (ED), in accordance with the Paperwork Reduction Act of 1995 (PRA) (44 U.S.C. 3506(c)(2)(A)), provides the general public and Federal agencies with an opportunity to comment on proposed, revised, and continuing collections of information. This helps the Department assess the impact of its information collection requirements and minimize the public's reporting burden. It also helps the public understand the Department's information collection requirements and provide the requested data in the desired format. ED is soliciting comments on the proposed information collection request (ICR) that is described below. The Department of Education is especially interested in public comment addressing the following issues: (1) Is this collection necessary to the proper functions of the Department; (2) will this information be processed and used in a timely manner; (3) is the estimate of burden accurate; (4) how might the Department enhance the quality, utility, and clarity of the information to be collected; and (5) how might the Department minimize the burden of this collection on the respondents, including through the use of information technology. Please note that written comments received in response to this notice will be considered public records.

Title of Collection: Education Stabilization Fund—Governor's Emergency Education Relief Fund (GEER) Recipient Data Collection Form.

OMB Control Number: 1810–NEW.

Type of Review: A new information collection.

Respondents/Affected Public: State, Local, and Tribal Governments; Private Sector.

Total Estimated Number of Annual Responses: 3,326.

Total Estimated Number of Annual Burden Hours: 13,568.

Abstract: This information collection supports the annual collection of data pertaining to the uses of funds under the Governor's Emergency Education Relief Fund (GEER Fund). The Department awards GEER grants to Governors (states) and analogous grants to Outlying Areas for the purpose of providing local educational agencies (LEAs), institutions of higher education (IHEs), and other education related entities with emergency assistance as a result of the coronavirus pandemic. The Department has awarded these grants—to States (governor's offices) based on a formula stipulated in the legislation. (1) 60% on the basis of the State's relative population of individuals aged 5 through 24. (2) 40% on the basis of the State's relative number of children counted under section 1124(c) of the Elementary and Secondary Education Act of 1965 (ESEA). The grants are awarded to Outlying Areas based on the same formula. The information will be reviewed by Department employees to ensure that GEER funds are used in accordance with Sec. 18002(c) of the CARES Act, and will be shared with the public to promote transparency regarding the allocation and uses of funds.

Dated: October 27, 2020.

Kate Mullan,

PRA Coordinator, Strategic Collections and Clearance, Governance and Strategy Division, Office of Chief Data Officer, Office of Planning, Evaluation and Policy Development.

[FR Doc. 2020–24173 Filed 10–30–20; 8:45 am]

BILLING CODE 4000–01–P

DEPARTMENT OF EDUCATION

[Docket No.: ED–2020–SCC–0124]

Agency Information Collection Activities; Submission to the Office of Management and Budget for Review and Approval; Comment Request; Education Stabilization Fund-Elementary and Secondary Emergency Education Relief Fund (ESSER) Recipient Data Collection Form

AGENCY: Office of Elementary and Secondary Education, Department of Education (ED).

ACTION: Notice.

SUMMARY: In accordance with the Paperwork Reduction Act of 1995, ED is proposing a new information collection.

DATES: Interested persons are invited to submit comments on or before December 2, 2020.

ADDRESSES: Written comments and recommendations for proposed information collection requests should be sent within 30 days of publication of this notice to *www.reginfo.gov/public/do/PRAMain.* Find this particular information collection request by selecting ''Department of Education'' under ''Currently Under Review,'' then check ''Only Show ICR for Public Comment'' checkbox.

FOR FURTHER INFORMATION CONTACT: For specific questions related to collection activities, please contact Gloria Tanner, 202–453–5596.

SUPPLEMENTARY INFORMATION: The Department of Education (ED), in accordance with the Paperwork Reduction Act of 1995 (PRA) (44 U.S.C. 3506(c)(2)(A)), provides the general public and Federal agencies with an opportunity to comment on proposed, revised, and continuing collections of information. This helps the Department assess the impact of its information collection requirements and minimize the public's reporting burden. It also helps the public understand the Department's information collection requirements and provide the requested data in the desired format. ED is soliciting comments on the proposed information collection request (ICR) that is described below. The Department of Education is especially interested in public comment addressing the following issues: (1) Is this collection necessary to the proper functions of the Department; (2) will this information be processed and used in a timely manner; (3) is the estimate of burden accurate; (4) how might the Department enhance the quality, utility, and clarity of the information to be collected; and (5) how might the Department minimize the burden of this collection on the respondents, including through the use of information technology. Please note that written comments received in response to this notice will be considered public records.

Title of Collection: Education Stabilization Fund-Elementary and Secondary Emergency Education Relief Fund (ESSER) Recipient Data Collection Form.

OMB Control Number: 1810–NEW.

Type of Review: A new information collection.

Respondents/Affected Public: State, Local, and Tribal Governments.

Total Estimated Number of Annual Responses: 14,656.

Total Estimated Number of Annual Burden Hours: 73,560.

Abstract: This information collection supports the annual collection of data pertaining to the uses of funds under the Elementary and Secondary School Emergency Relief Fund (ESSER Fund). The Department ESSER awards grants to State educational agencies (SEAs) (and analogous grants to Outlying Areas) for the purpose of providing local educational agencies (LEAs), including charter schools that are LEAs, with emergency relief funds to address the impact that Novel Coronavirus Disease 2019 (COVID–19) has had, and continues to have, on elementary and secondary schools across the nation. LEAs must provide equitable services to students and teachers in non-public schools as required under the Coronavirus Aid, Relief, and Economic Security Act (CARES Act). The information will be reviewed by Department employees to ensure that ESSER funds are used in accordance with Sec. 18003(d) of the CARES Act and will be shared with the public to promote transparency regarding the allocation and uses of funds.

Dated: October 27, 2020.

Kate Mullan,

PRA Coordinator, Strategic Collections and Clearance, Governance and Strategy Division, Office of Chief Data Officer, Office of Planning, Evaluation and Policy Development.

[FR Doc. 2020–24174 Filed 10–30–20; 8:45 am]

BILLING CODE 4000–01–P

ENVIRONMENTAL PROTECTION AGENCY

[EPA–R07–SFUND–2020–0540 FRL–10016–20–Region 8]

CERCLA Prospective Purchaser Administrative Settlement Agreement and Covenant Not To Sue, Lockwood Solvent Ground Water Plume Superfund Site, Billings, Montana

AGENCY: Environmental Protection Agency (EPA).

ACTION: Notice; request for public comment.

SUMMARY: In accordance with the requirements of the Comprehensive Environmental Response, Compensation, and Liability Act of 1980, as amended (''CERLCA'') notice is hereby given by the U.S. Environmental Protection Agency (EPA), Region 8, of a proposed prospective purchaser administrative settlement agreement, embodied in an Administrative Settlement Agreement and Covenant Not to Sue (''Settlement Agreement'') with the State of Montana (the ''State''), MAC LTT, LLC (''MAC''), which is purchasing the Property, and MAC LTT Manufacturing, Inc., a related entity to MAC, which, although not purchasing the Property, has leased the Property since 2013 and will continue to lease and operate the Property after MAC purchases the Property (''Lessee,'' and with MAC collectively, ''Purchaser''). This Settlement Agreement pertains to a portion of the approximately 580-acre area known as the Lockwood Solvent Ground Water Plume Superfund Site (''Site'') located at 1430 U.S. Highway 87 East, Billings, Montana (''The Property'').

DATES: Comments must be submitted on or before December 2, 2020.

ADDRESSES: The proposed Settlement Agreement and additional background information relating to the agreement will be available for public inspection at the EPA Superfund Record Center, 1595 Wynkoop Street, Denver, Colorado, by appointment. Comments and requests for a copy of the proposed agreement should be addressed to Julie Nicholson, Enforcement Specialist, Superfund and Emergency Management Division, Environmental Protection Agency-Region 8, Mail Code 8SEM–PAC, 1595 Wynkoop Street, Denver, Colorado 80202, (303) 312–6343 and should reference the Lockwood Solvent Ground Water Plume Site.

You may also send comments, identified by Docket ID No. EPA–R07–SFUND–2020–0540 to *http://*

www.regulations.gov. Follow the online instructions for submitting comments.

FOR FURTHER INFORMATION CONTACT: Mark Chalfant, Senior Assistant Regional Counsel, Office of Regional Counsel, Environmental Protection Agency, Region 8, Mail Code 8ORC–LEC, 1595 Wynkoop, Denver, Colorado 80202, (303) 312–6177, *chalfant.mark@epa.gov.*

SUPPLEMENTARY INFORMATION: Written Comments: Submit your comments, identified by Docket ID No. EPA–R07–SFUND–2020–0540 at *http://www.regulations.gov.* Once submitted, comments cannot be edited or removed from *Regulations.gov.* The EPA may publish any comment received to its public docket. Do not submit electronically any information you consider to be Confidential Business Information (CBI) or other information whose disclosure is restricted by statute. If CBI exists, please contact Mr. Bruce Morrison. Multimedia submissions (audio, video, etc.) must be accompanied by a written comment. The written comment is considered the official comment and should include discussion of all points you wish to make. The EPA will generally not consider comments or comment contents located outside of the primary submission (*i.e.,* on the web, cloud, or other file sharing system). For additional submission methods, the full EPA public comment policy, information about CBI or multimedia submissions, and general guidance on making effective comments, please visit *https://www.epa.gov/dockets/commenting-epa-dockets.*

Notice is hereby given by the U.S. Environmental Protection Agency, Region 8, of a proposed prospective purchaser settlement agreement, embodied in an Administrative Settlement Agreement and Covenant Not to Sue, with the State of Montana, MAC LTT, LLC, which is purchasing the Property, and MAC LTT Manufacturing, Inc., a related entity to MAC, which, although not purchasing the Property, has leased the Property since 2013 and will continue to lease and operate the Property after MAC purchases the Property. This Settlement Agreement pertains to a portion of the approximately 580-acre area known as the Lockwood Solvent Ground Water Plume Superfund Site located at 1430 U.S. Highway 87 East, Billings, Montana. Neither of the MAC-related business entities is responsible for the original contamination at the Site. Under the proposed Settlement Agreement, both MAC LTT, LLC and MAC LTT Manufacturing, Inc. would be required to comply with standard CERCLA bona fide prospective purchaser continuing obligations, including access, appropriate care, and non-interference with the CERCLA remedy. The proposed Settlement Agreement provides for the payment of certain response costs incurred by the EPA and the State of Montana at or in connection with the Site. The proposed Settlement Agreement includes a covenant by the United States and the State of Montana not to sue or take administrative action against MAC LTT, LLC and MAC LTT Manufacturing, Inc., pursuant to sections 106 and 107(a) of CERCLA for Existing Contamination, as that term is defined in the proposed Settlement Agreement, and for payment of response costs. For thirty (30) days following the date of publication of this document, the EPA will receive written comments relating to the settlement. The EPA will consider all comments received and may modify or withdraws its consent to the Settlement Agreement if comments received disclose facts or considerations that indicate that the proposed settlement is inappropriate, improper, or inadequate. The EPA's response to any comments received will be available for public inspection at EPA Region 8, 1595 Wynkoop Street, Denver, Colorado 80202.

Betsy Smidinger,

Division Director, Superfund and Emergency Management Division, Region 8.

[FR Doc. 2020–24163 Filed 10–30–20; 8:45 am]

BILLING CODE 6560–50–P

FEDERAL COMMUNICATIONS COMMISSION

[FRS 17192]

Open Commission Meeting, Tuesday October 27, 2020

October 20, 2020.

The Federal Communications Commission will hold an Open Meeting on the subjects listed below on Tuesday, October 27, 2020, which is scheduled to commence at 10:30 a.m. Due to the current COVID–19 pandemic and related agency telework and headquarters access policies, this meeting will be in a wholly electronic format and will be open to the public on the internet via live feed from the FCC's web page at *www.fcc.gov/live* and on the FCC's YouTube channel.

Item No.	Bureau	Subject
1	WIRELINE COMPETITION	TITLE: Restoring Internet Freedom (WC Docket No. 17–108); Bridging the Digital Divide for Low-Income Consumers (WC Docket No. 17–287); Lifeline and Link Up Reform and Modernization (WC Docket No. 11–42). SUMMARY: The Commission will consider an Order on Remand that would respond to the remand from the U.S. Court of Appeals for the D.C. Circuit and conclude that the Restoring Internet Freedom Order promotes public safety, facilitates broadband infrastructure deployment, and allows the Commission to continue to provide Lifeline support for broadband Internet access service.
2	WIRELINE COMPETITION	TITLE: Establishing a 5G Fund for Rural America (GN Docket No. 20–32). SUMMARY: The Commission will consider a Report and Order that would establish a $9 billion 5G Fund for Rural America to ensure that all Americans have access to the next generation of wireless connectivity.
3	OFFICE F ENGINEERING AND TECHNOLOGY.	TITLE: Increasing Unlicensed Wireless Opportunities in TV White Spaces (ET Docket No. 20–36). SUMMARY: The Commission will consider a Report and Order that would increase opportunities for unlicensed white space devices to operate on broadcast television channels 2–35 and expand wireless broadband connectivity in rural and underserved areas.
4	WIRELESS TELE-COMMUNICATIONS	TITLE: Streamlining State and Local Approval of Certain Wireless Structure Modifications (WT Docket No. 19–250; RM–11849). SUMMARY: The Commission will consider a Report and Order that would further accelerate the deployment of 5G by providing that modifications to existing towers involving limited ground excavation or deployment would be subject to streamlined state and local review pursuant to section 6409(a) of the Spectrum Act of 2012.

Item No.	Bureau	Subject
5	MEDIA	TITLE: All-Digital AM Broadcasting (MB Docket No. 19–311); Revitalization of the AM Radio Service (MB Docket No. 13–249). SUMMARY: The Commission will consider a Report and Order that would authorize AM stations to transition to an all-digital signal on a voluntary basis and would also adopt technical specifications for such stations.
6	MEDIA	TITLE: Video Description: Implementation of the Twenty-First Century Communications and Video Accessibility Act of 2010 (MB Docket No. 11–43). SUMMARY: The Commission will consider a Report and Order that would expand audio description requirements to 40 additional television markets over the next four years in order to increase the amount of video programming that is accessible to blind and visually impaired Americans.
7	WIRELINE COMPETITION	TITLE: Modernizing Unbundling and Resale Requirements in an Era of Next-Generation Networks and Services (WC Docket No. 19–308). SUMMARY: The Commission will consider a Report and Order that would modernize the Commission's unbundling and resale regulations, eliminating requirements where they stifle broadband deployment and the transition to next-generation networks, but preserving them where they are still necessary to promote robust intermodal competition.
8	ENFORCEMENT	TITLE: Enforcement Bureau Action. SUMMARY: The Commission will consider an enforcement action.

The meeting will be webcast with open captioning at: *www.fcc.gov/live*. Open captioning will be provided as well as a text only version on the FCC website. Other reasonable accommodations for people with disabilities are available upon request. In your request, include a description of the accommodation you will need and a way we can contact you if we need more information. Last minute requests will be accepted but may be impossible to fill. Send an email to: *fcc504@fcc.gov* or call the Consumer & Governmental Affairs Bureau at 202–418–0530.

Additional information concerning this meeting may be obtained from the Office of Media Relations, (202) 418–0500. Audio/Video coverage of the meeting will be broadcast live with open captioning over the internet from the FCC Live web page at *www.fcc.gov/live*.

Federal Communications Commission.

Marlene Dortch,

Secretary.

[FR Doc. 2020–24151 Filed 10–30–20; 8:45 am]

BILLING CODE 6712–01–P

FEDERAL COMMUNICATIONS COMMISION

[MB Docket 16–306; GN Docket 12–268; DA 20–1171; FRS 17184]

Invoice Filing Deadlines for TV Broadcaster Relocation Fund

AGENCY: Federal Communications Commission.

ACTION: Notice.

SUMMARY: In this document, the Incentive Auction Task Force and Media Bureau (Bureau) announce filing deadlines for eligible entities to submit all remaining invoices and other documentation on FCC Form 2100, Schedule 399 (Reimbursement Form) for reimbursement from the TV Broadcaster Relocation Fund (Reimbursement Fund or Fund). Eligible entities assigned repack transition completion dates in the first half of the 39-month post-auction transition period must submit all remaining invoices for incurred expenses by October 8, 2021. The deadline for eligible entities assigned completion dates in the second half of the transition period is March 22, 2022. The deadline for all other participants in the reimbursement program is September 5, 2022. These deadlines are established to help ensure that all eligible invoices are processed and that entities are able to complete the Fund close-out procedures prior to July 3, 2023, when any unobligated amounts in the Fund will be rescinded and deposited into the U.S. Treasury. Entities are encouraged to initiate close out procedures as early as possible and we emphasize that they need not wait for their assigned final invoice filing deadline to do so.

DATES: Invoices due for entities assigned completion dates in the first half of the repack period: October 8, 2021. Invoices due for entities assigned completion dates in the second half of the repack period: March 22, 2022. Invoices due for all other participants in the reimbursement program: September 5, 2020.

ADDRESSES: Reimbursement Information website: *https://www.fcc.gov/about-fcc/fcc-initiatives/incentive-auctions/reimbursement.* Follow directions under Procedures tab to submit invoices for reimbursement.

FOR FURTHER INFORMATION CONTACT: For additional information or questions about the reimbursement process, please call the Reimbursement Help Line at (202) 418–2009, or email *Reimburse@fcc.gov.*

SUPPLEMENTARY INFORMATION: At the close of the incentive auction and beginning of the post-auction transition period on April 13, 2017, there were 987 full power and Class A stations reassigned (repacked) to new channels. The Commission established a 39-month period running until July 13, 2020, for repacked television stations to transition off of their pre-auction channels. The Commission determined that a phased construction schedule would facilitate efficient use of the resources necessary to complete the transition and adopted the Transition Scheduling Plan (Plan) that assigned each repacked station to one of 10 phases. Each phase had a designated completion date by which stations assigned to that phase were required to vacate their pre-auction channels. The completion date for Phase 1 was November 8, 2018, and the subsequent phases had subsequent completions dates through the Phase 10 completion date on July 3, 2020. All 987 repacked stations have now vacated their pre-auction channels. As of October 6, 2020, over 92% of the repacked stations are operating on their final facilities. The remaining 76 stations have been granted special temporary authority and revised construction permit deadlines to continue pursuing completion of their final facilities. We are optimistic that these remaining stations will be able to meet their revised deadlines and we will continue to monitor and work with them to ensure the continued success of the post-incentive auction transition.

In addition to repacked stations, certain low power TV and TV translator stations (LPTV/translators) were displaced by the rebanding and repacking process. Over 2,000 such stations were granted construction permits in a Special Displacement Window to construct new facilities. Some of the LPTV/translator stations were displaced and completed construction of displacement facilities early in the transition period. Others are still working toward meeting their construction permit deadlines. FM radio spectrum was not subject to repacking, but some FM stations whose antennas are collocated on or near a tower supporting a repacked television station antenna incurred costs due to construction of repacked television facilities. Multichannel video programming distributors (MVPDs) also incurred costs to continue to carry the signal of repacked stations. Some FM stations and MVPDs have already incurred costs and a limited number may incur additional costs as repacked stations complete transition to final facilities.

Congress provided $2.75 billion for the Reimbursement Fund in the Spectrum Act and Reimbursement Expansion Act (REA) to reimburse certain costs associated with the post-incentive auction transition and for the Commission to undertake education efforts for over-the-air television viewers. The reimbursement program for full power and Class A TV stations and MVPDs began in 2017 and, pursuant to the REA, was expanded in 2019 to include FM stations and LPTV/translator stations. To date, participants in the Reimbursement Fund include 872 LPTV/translator stations and 89 FM stations in addition to 957 repacked full power and Class A stations. The procedures used to disburse monies from the Fund enable us to timely process reimbursement requests and assure that only eligible expenses are paid and that available funds are spread appropriately across all eligible entities.

All entities participating in the reimbursement program were required to file estimates using the Reimbursement Form. The estimates were then reviewed and adjusted for eligibility and reasonableness by Commission staff, who were assisted by a Fund Administrator experienced in television broadcast engineering and federal funds management. Thereafter, each entity received an initial allocation from the Fund based on a percentage of the entity's verified estimates. The total allocation amount was calculated based in part on the total amount of estimated repacking expenses, as well as the amount of money available in the Reimbursement Fund for certain categories of entities. To ensure that reimbursement funds are allocated fairly and consistently, and to have sufficient flexibility to make equitable allocation decisions that maximize the funds available for reimbursement, funds have been allocated in tranches and supplemented via additional allocations. To date, full power, Class A, and FM stations and MVPDs have received allocations of 92.5 percent of each entity's verified estimates and LPTV/translator stations have received allocations of 85 percent of each entity's verified estimates.

As participating entities incur expenses, they submit invoices and other supporting documentation reflecting those expenses, again using the Reimbursement Form. The Commission and Fund Administrator review the submissions for reasonableness and eligibility and, if approved, forward them to Treasury for payment. Consistent with our experience in managing the Fund to date, we expect that the number of reimbursement requests will continue to increase over the life of the Fund. We rely on drawdown amounts and submitted estimates, including revisions, to make allocation decisions, and we continue to encourage eligible entities to promptly submit invoices for reimbursement of incurred costs and to revise their cost estimates, if applicable, based on more refined quotations from vendors and other real-time information. As of September 29, 2020, the total of all verified estimates in the Reimbursement Fund was over $2.177 billion, the total allocation was over $2.016 billion, over $1.323 billion had been forwarded to Treasury for payment, and over $78 million in invoices were at various stages of the review process.

On February 11, 2019, we announced procedures for entities to close out their books and accounts in the Reimbursement Fund. These procedures are necessary to bring each entity's participation in the Reimbursement Fund to a close and to help us prevent waste, fraud and abuse associated with the disbursement of federal funds. Because entities are allocated a pro rata portion of their total verified estimates, close out is a two-step process consisting of an interim and final close-out procedure. When an entity has submitted all of its invoices and supporting documentation, it must use the Reimbursement Form to notify the Media Bureau. The Fund Administrator then provides the entity with a financial reconciliation statement that details verified estimated amounts; allocated amounts; amounts requested for reimbursement; and amounts disbursed by the Commission. If we discover any overpayments during this procedure, we notify the entity that it must return the excess amount to the Commission. Once the financial reconciliation statement has been reviewed by the station and any necessary changes made, it must file an executed version of the financial reconciliation statement with the Fund Administrator, after which we will issue an interim close-out letter. To date, 8 entities have completed interim close out procedures.

After all or nearly all entities eligible for reimbursement from the Fund have entered the close-out process—or at an earlier time when the Media Bureau can reasonably extrapolate that the total available funding will be sufficient to meet the total cost of the program—we may make a final allocation to reimburse the entity for the total amount of remaining incurred expenses. At that time, each entity will enter the final close-out procedures and receive a final close-out letter. That final close-out letter will serve as the official notice of account close-out, include a summary of any financial changes that occurred during the interim closing period, and remind entities of their ongoing document retention requirements. Pursuant to the REA, any unobligated amounts in the Fund as of July 3, 2023, will be rescinded from the Fund and deposited into the Treasury and dedicated for the sole purpose of deficit reduction.

Filing Deadlines for Remaining Invoices

The Commission authorized the Media Bureau to set deadlines for final submission to the Reimbursement Fund. Consistent with the Commission's decision to use a phased approach for the Transition Scheduling Plan, we will also utilize a phased approach to set deadlines for filing all remaining reimbursement submissions. This approach recognizes our experience to date that repacked stations with phase assignments earlier in the transition period are more likely to have completed their transition to final facilities than those with more recent phase deadlines and are therefore more likely to have completed all construction and incurred all costs associated with the transition. A phased approach will also sequence our processing work so that the Fund Administrator and Commission staff are not overwhelmed with a deluge of filings at the program's end, which could not only jeopardize the timely

completion of the program but also prevent entities from receiving full reimbursement for their expenses. We also recognize that program participants require human capital to complete the close-out process, and we believe the phased approach will lessen the resourcing burden to station groups and other participants who must manage multiple entities in the reimbursement program. We are also aware that MVPDs and FM stations may incur costs toward the end of repacked stations' construction projects. Similarly, we recognize that because LPTV/translator stations do not have transition deadlines in the Transition Scheduling Plan, and some may not yet have received notice from wireless licensees announcing that they intend to commence operations on the LPTV/translator station's pre-auction channel, they may incur expenses toward the end of the program. Because some stations have not yet completed all necessary construction or incurred all costs for all reimbursable work, we are setting all deadlines well in advance. We believe providing this lengthy advance notice will permit all entities more than enough time to finish any remaining work, submit their final invoices, and complete the reimbursement close-out process. The staggered deadlines therefore balance the burden on stations that have remaining work to complete with the need to have all documentation reflecting incurred costs on file in a timely manner that permits the Fund Administrator and Commission staff to fully process all reimbursement requests and complete the interim and final close out procedures prior to the July 3, 2023, deadline set by Congress, at which time unobligated funds must be rescinded to Treasury.

Deadline for Final Submissions from Phases 1–5 Repacked Stations: October 8, 2021. All repacked stations assigned to Phases 1 through 5, and repacked stations that were granted permission to transition prior to the Phase 1 testing period, must submit all remaining invoices and supporting documentation using the Reimbursement Form, and initiate interim close-out procedures, no later than October 8, 2021. All 510 repacked stations in this group had already satisfied the requirement to vacate their pre-auction channel prior to September 11, 2019. As of October 6, 2020, all but 27 of such stations were operating on their final facilities.

Deadline for Final Submissions from Phases 6–10 Repacked Stations: March 22, 2022. All repacked stations assigned to Phases 6 through 10, and repacked stations that were granted permission to transition shortly after the end of Phase 10 due to circumstances beyond their control, must submit all remaining invoices and supporting documentation using the Reimbursement Form, and initiate interim close-out procedures, no later than March 22, 2022. With five exceptions, all of which transitioned by September 30, 2020, all 444 repacked stations in this group had satisfied the requirement to transition by July 13, 2020. As of October 6, 2020, all but 47 such stations were operating on their final facilities.

Deadline for Final Submissions from All Other Entities: September 5, 2022. All MVPDs, FM stations, and LPTV/translator stations participating in the reimbursement program must submit all remaining invoices and supporting documentation using the Reimbursement Form, and initiate interim close-out procedures, no later than September 5, 2022. This group includes 1,140 entities.

In light of the fact that the first deadline for final submissions is October 8, 2021—over a year after the July 13, 2020, statutory end of the transition period and more than a year from this announcement of the deadline—we do not anticipate a need to grant extensions of the assigned submission deadlines. In this regard, we note that expenses are reimbursable when costs are incurred and therefore can be submitted while final construction is underway. However, in the unlikely event that an entity faces circumstances beyond its control, we will consider a limited extension by means of shifting an entity with the first or second deadline assignment to the second or third deadline assignment. An entity requesting such a shift will have to provide evidence that circumstances requiring the extension were outside of its control, such as local zoning or a force majeure event occurring proximate to the final submission deadline. Note that we will not consider the availability of reimbursement for specific purchases a mitigating factor in evaluating extension requests. Furthermore, we advise entities that we will not be able to grant extensions that do not provide the staff with sufficient processing time to complete close-out procedures for all stations. Thus, an entity's failure to complete construction in a timely manner and to make final submissions by the assigned deadlines could preclude that entity from receiving full reimbursement because unobligated amounts in the Fund must be rescinded to Treasury by July 3, 2023.

We stress that entities need not wait until their assigned final invoice filing deadline to enter the interim close out process. Indeed, we strongly encourage all entities in the program to initiate interim close out procedures as soon as they have incurred and submitted invoices for all reimbursable costs. Because all repacked stations have vacated their pre-auction channel but only eight have completed interim close-out procedures, we believe that many entities are unnecessarily delaying making final submissions to the program and initiating interim close-out procedures. We note that payments up to the total amount of each entity's allocation are available upon processing of documents reflecting reasonably incurred costs. Furthermore, we will not be able to make a final allocation up to the full amount of verified estimates until all or virtually all invoices for incurred costs are submitted or at such time as we can reasonably extrapolate that the total available funding will be sufficient to meet the total cost of the program.

Audits, Data Validations, and Disbursement Validations

The Commission has determined ''that audits, data validations, and site visits are essential tools in preventing waste, fraud, and abuse, and that use of these measures will maximize the amount of money available for reimbursement.'' The Commission also specifically contemplated that a third-party audit firm acting on behalf of the Commission ''may conduct audits of entities receiving disbursements from the Reimbursement Fund, and these audits may occur both during and following the three-year Reimbursement Period.'' The Commission also provided notice that any ''[e]ntities receiving money from the Reimbursement Fund must make available all relevant documentation upon request from the Commission or its contractor.''

The Commission also noted that the Media Bureau or a third-party auditor will continue to validate expenses after the reimbursement period ends and, ''where appropriate, recover any money that should be returned, consistent with the Commission's obligation to recover improper payments.'' We stress that entities eligible for reimbursement may be selected for audits, data validations, and site visits before or after a station has taken all steps necessary to complete its construction project, or during the interim close-out period, or thereafter.

We have performed, and intend to continue to perform, disbursement validations in order to confirm that entities receiving reimbursement funding for third party services have in fact disbursed monies received from the Fund in a manner consistent with

representations made to the Commission in the Reimbursement Form. Evidence of valid disbursements may consist of copies of cancelled checks, financial institution statements detailing the disbursement, wire or electronic fund transfer confirmations, credit card statements, or other relevant third-party banking information that affirmatively demonstrates the proper payment of funds to third-party vendors. Not every station may be selected for additional disbursement data validations, but all Fund participants are reminded that they must retain documents for a period ending 10 years after the date they receive their final payments from the Reimbursement Fund.

Federal Communications Commission.

Thomas Horan,

Chief of Staff, Media Bureau.

[FR Doc. 2020–24191 Filed 10–30–20; 8:45 am]

BILLING CODE 6712–01–P

FEDERAL RESERVE SYSTEM

Change in Bank Control Notices; Acquisitions of Shares of a Bank or Bank Holding Company

The notificants listed below have applied under the Change in Bank Control Act (Act) (12 U.S.C. 1817(j)) and § 225.41 of the Board's Regulation Y (12 CFR 225.41) to acquire shares of a bank or bank holding company. The factors that are considered in acting on the applications are set forth in paragraph 7 of the Act (12 U.S.C. 1817(j)(7)).

The public portions of the applications listed below, as well as other related filings required by the Board, if any, are available for immediate inspection at the Federal Reserve Bank(s) indicated below and at the offices of the Board of Governors. This information may also be obtained on an expedited basis, upon request, by contacting the appropriate Federal Reserve Bank and from the Board's Freedom of Information Office at *https://www.federalreserve.gov/foia/request.htm.* Interested persons may express their views in writing on the standards enumerated in paragraph 7 of the Act.

Comments regarding each of these applications must be received at the Reserve Bank indicated or the offices of the Board of Governors, Ann E. Misback, Secretary of the Board, 20th Street and Constitution Avenue NW, Washington, DC 20551–0001, not later than November 17, 2020.

A. *Federal Reserve Bank of Chicago* (Colette A. Fried, Assistant Vice President) 230 South LaSalle Street, Chicago, Illinois 60690–1414:

1. *Songer Farms, Inc., David A. Songer, both of Veedersburg, Indiana; together with Jahn S. Songer, Beverly D. Songer and minor children, all of Veedersburg, Indiana; Tracy Songer Wright, Columbus, Indiana, Barbara L. Songer, Rotonda West, Florida; Suzanne N. Kunkle and Aaron H. Kunkle, both of Indianapolis, Indiana; and Marci S. Roark, Navarre, Florida;* to join Stephen A. Songer, Veedersburg, Indiana, and form the Songer Family Control Group, a group acting in concert to retain 25 percent or more of the voting shares of Veedersburg Bank Corporation, and thereby indirectly retain 25 percent or more of the voting shares of CentreBank, both of Veedersburg, Indiana.

2. *The Theodore G. Saltzman Jr. Bank Trust, Theodore Saltzman as trustee, both of Dakota Dunes, South Dakota;* to replace the Saltzman Family Control group and become members of a group acting in concert to retain 25 percent or more of the voting shares of Pioneer Development Company and indirectly retain 25 percent or more of the voting shares of Pioneer Bank, both of Sergeant Bluff, Iowa. In addition, The Sundae M. Haggerty Irrevocable Bank Trust, Shennen S.C. Saltzman, as trustee, The Shennen S.C. Saltzman Bank Trust, Shennen Saltzman, as trustee, all of Dakota Dunes, South Dakota; The Shennen S.C. Saltzman Irrevocable Bank Trust, Sundae Haggerty, as trustee, and The Sundae M. Haggerty Bank Trust, Sundae Haggerty, as trustee, all of South Sioux City, Nebraska; to replace the Saltzman Family Control group and become members of a group acting in concert to acquire 25 percent or more of the voting shares of Pioneer Development Company and indirectly acquire 25 percent or more of the voting shares of Pioneer Bank.

B. Federal Reserve Bank of Kansas City (Dennis Denney, Assistant Vice President) 1 Memorial Drive, Kansas City, Missouri 64198–0001:

1. *The 2017 Porter Loomis Legacy Trust, John Porter Loomis, as trustee and both as members of the Loomis Family Group, both of Pratt, Kansas, The Adele Krey Loomis Revocable Trust, Anne Marie Sadowski Loomis, both of Pratt, Kansas, and Adele Krey Loomis, as co-trustees, Stamford, Connecticut, The KLW Stock Trust, Linda M. Loomis, both of Iuka, Kansas, and Katherine L. Work, as co-trustees, La Canada Flintridge, California, The Margaret P. Hellmuth Stock Trust, Linda M. Loomis, both of Iuka, Kansas and Margaret P. Hellmuth, as co-trustees, Glencoe, Illinois, and The Victoria K. Thompson Stock Trust, Iuka, Kansas, Linda M. Loomis and Victoria K. Thompson, as co-trustees, Santa Cruz, California;* to become members of the Loomis Family Group, a group acting in concert to acquire voting shares of The Peoples Bankshares Ltd. and thereby indirectly acquire The Peoples Bank, both in Pratt, Kansas. In addition, The Linda M. Loomis Revocable Trust, Linda M. Loomis, as trustee, The Joseph F. Loomis Revocable Trust, Joseph F. Loomis and Linda M. Loomis, co-trustees, all of Iuka, Kansas, The John Porter Loomis Revocable Trust, J. Porter Loomis and Anne Marie Sadowski Loomis, as co-trustees, all of Pratt, Kansas, to become members of the Loomis Family Group, a group acting in concert to retain voting shares and acquire additional voting shares of Peoples Bankshares Ltd. and thereby indirectly retain voting shares and acquire additional voting shares of the Peoples Bank. Finally, Anne Marie Sadowski Loomis Trust, Anne Marie Sadowski Loomis and John Porter Loomis, as co-trustees, to become members of the Loomis Family Group and retain voting shares of Peoples Bankshares Ltd. and thereby indirectly retain voting shares of the Peoples Bank.

Board of Governors of the Federal Reserve System, October 28, 2020.

Michele Taylor Fennell,

Deputy Associate Secretary of the Board.

[FR Doc. 2020–24183 Filed 10–30–20; 8:45 am]

BILLING CODE P

FEDERAL TRADE COMMISSION

Agency Information Collection Activities; Proposed Collection; Comment Request; Extension

AGENCY: Federal Trade Commission.

ACTION: Notice.

SUMMARY: In accordance with the Paperwork Reduction Act of 1995 (PRA), the Federal Trade Commission (FTC or Commission) is seeking public comment on its proposal to extend for an additional three years the Office of Management and Budget (OMB) clearance for information collection requirements in its Trade Regulation Rule entitled Power Output Claims for Amplifiers Utilized in Home Entertainment Products (Amplifier Rule or Rule), (OMB Control Number 3084–0105). That clearance expires on January 31, 2021.

DATES: Comments must be received on or before January 4, 2021.

ADDRESSES: Interested parties may file a comment online or on paper by following the instructions in the Request for Comments part of the

SUPPLEMENTARY INFORMATION section below. Write ''Amplifier Rule; PRA Comment: FTC File No. P072108'' on your comment, and file your comment online at *https://www.regulations.gov* by following the instructions on the web-based form. If you prefer to file your comment on paper, mail your comment to the following address: Federal Trade Commission, Office of the Secretary, 600 Pennsylvania Avenue NW, Suite CC–5610 (Annex J), Washington, DC 20580, or deliver your comment to the following address: Federal Trade Commission, Office of the Secretary, Constitution Center, 400 7th Street SW, 5th Floor, Suite 5610 (Annex J), Washington, DC 20024.

FOR FURTHER INFORMATION CONTACT: Jock K. Chung, Attorney, Division of Enforcement, Bureau of Consumer Protection, Federal Trade Commission, Mail Code CC–9528, 600 Pennsylvania Ave. NW, Washington, DC 20580, (202) 326–2984.

SUPPLEMENTARY INFORMATION:

Title: Amplifier Rule, 16 CFR part 432.

OMB Control Number: 3084–0105.

Type of Review: Extension of a currently approved collection.

Estimated Annual Hours of Burden: 450 hours (300 testing-related hours; 150 disclosure-related hours).

Likely Respondents and Estimated Burden:

(a) Testing—High fidelity manufacturers—300 new products/year × 1 hour each = 300 hours; and

(b) Disclosures—High fidelity manufacturers—[(300 new products/year × 1 specification sheet) + (300 new products/year × 1 brochure)] × 15 minutes per specification sheet or brochure = 150 hours.

Frequency of Response: Periodic.

Estimated Annual Labor Cost: $26,130 per year ($15,897 for testing + $10,233 for disclosures).

Abstract: The Amplifier Rule assists consumers by standardizing the measurement and disclosure of power output and other performance characteristics of amplifiers in stereos and other home entertainment equipment. The Rule also specifies the test conditions necessary to make the disclosures that the Rule requires.

As required by section 3506(c)(2)(A) of the PRA, 44 U.S.C. 3506(c)(2)(A), the FTC is providing this opportunity for public comment before requesting that OMB extend the existing clearance for the information collection requirements contained in the Commission's Amplifier Rule.

Amplifier Rule Burden Statement

Estimated annual hours of burden: 450 hours (300 testing hours; 150 disclosure hours).

The Rule's provisions require affected entities to test the power output of amplifiers in accordance with a specified FTC protocol. The Commission staff estimates that approximately 300 new amplifiers and receivers come on the market each year. High fidelity manufacturers routinely conduct performance tests on these new products prior to sale. Because manufacturers conduct such tests, the Rule imposes no additional costs except to the extent that the FTC protocol is more time-consuming than alternative testing procedures. In this regard, a warm-up period that the Rule requires before measurements are taken may add approximately one hour to the time testing would otherwise entail. Thus, staff estimates that the Rule imposes approximately 300 hours (1 hour × 300 new products) of added testing burden annually.

In addition, the Rule requires disclosures if a manufacturer makes a power output claim for a covered product in an advertisement, specification sheet, or product brochure. This requirement does not impose any additional costs on manufacturers because, absent the Rule, media advertisements, as well as manufacturer specification sheets and product brochures, would contain a power specification obtained using an alternative to the Rule-required testing protocol. The Rule, however, also requires disclosure of harmonic distortion, power bandwidth, and impedance ratings in manufacturer specification sheets and product brochures that might not otherwise be included.

Staff assumes that manufacturers produce one specification sheet and one brochure each year for each new amplifier and receiver. The burden of disclosing the harmonic distortion, bandwidth, and impedance information on the specification sheets and brochures is limited to the time needed to draft and review the language pertaining to the aforementioned specifications. Staff estimates the time involved for this task to be a maximum of fifteen minutes (or 0.25 hours) for each new specification sheet or brochure for a total of 150 hours (derived from [(300 new products × 1 specification sheet) + (300 new products × 1 brochure)] × 0.25 hours for each specification sheet or brochure). The total annual burden imposed by the Rule, therefore, is approximately 450 burden hours for testing and disclosures.

Estimated annual labor cost burden: $26,130.

Generally, electronics engineers perform the testing of amplifiers and receivers. Staff estimates a labor cost of $15,897 for such testing (300 hours for testing × $52.99 mean hourly wages). Staff assumes advertising or promotions managers prepare the disclosures contained in product brochures and manufacturer specification sheet and estimates a labor cost of $10,233 (150 hours for disclosures × $68.22 mean hourly wages). Accordingly, staff estimates the total labor costs associated with the Rule to be approximately $26,130 per year ($15,897 for testing + $10,233 for disclosures).[1]

The Rule imposes no capital or other non-labor costs because its requirements are incidental to testing and advertising done in the ordinary course of business.

Request for Comments

Pursuant to Section 3506(c)(2)(A) of the PRA, the FTC invites comments on: (1) Whether the proposed collection of information is necessary for the proper performance of the functions of the agency, including whether the information will have practical utility; (2) the accuracy of the agency's estimate of the burden of the proposed collection of information, including the validity of the methodology and assumptions used; (3) ways to enhance the quality, utility, and clarity of the information to be collected; and (4) ways to minimize the burden of maintaining records and providing disclosures to consumers. All comments must be received on or before January 4, 2021.

You can file a comment online or on paper. For the FTC to consider your comment, we must receive it on or before January 4, 2021. Write ''Amplifier Rule; PRA Comment: FTC File No. P072108'' on your comment. Your comment—including your name and your state—will be placed on the public record of this proceeding, including the *https://www.regulations.gov* website.

Due to the public health emergency in response to the COVID–19 outbreak and the agency's heightened security screening, postal mail addressed to the Commission will be subject to delay. We encourage you to submit your comments online through the *https://www.regulations.gov* website.

If you prefer to file your comment on paper, write ''Amplifier Rule; PRA

[1] The wage rates for electronics engineers and advertising and promotions managers are based on recent data from the Bureau of Labor Statistics Occupational Employment Statistics Survey at *https://www.bls.gov/news.release/ocwage.htm.*

Comment: FTC File No. P072108'' on your comment and on the envelope, and mail your comment to the following address: Federal Trade Commission, Office of the Secretary, 600 Pennsylvania Avenue NW, Suite CC–5610 (Annex J), Washington, DC 20580; or deliver your comment to the following address: Federal Trade Commission, Office of the Secretary, Constitution Center, 400 7th Street SW, 5th Floor, Suite 5610 (Annex J), Washington, DC 20024. If possible, submit your paper comment to the Commission by courier or overnight service.

Because your comment will become publicly available at *https://www.regulations.gov,* you are solely responsible for making sure that your comment does not include any sensitive or confidential information. In particular, your comment should not include any sensitive personal information, such as your or anyone else's Social Security number; date of birth; driver's license number or other state identification number, or foreign country equivalent; passport number; financial account number; or credit or debit card number. You are also solely responsible for making sure that your comment does not include any sensitive health information, such as medical records or other individually identifiable health information. In addition, your comment should not include any ''trade secret or any commercial or financial information which . . . . is privileged or confidential'' —as provided by Section 6(f) of the FTC Act, 15 U.S.C. 46(f), and FTC Rule 4.10(a)(2), 16 CFR 4.10(a)(2) —including in particular competitively sensitive information such as costs, sales statistics, inventories, formulas, patterns, devices, manufacturing processes, or customer names.

Comments containing material for which confidential treatment is requested must be filed in paper form, must be clearly labeled ''Confidential,'' and must comply with FTC Rule 4.9(c). In particular, the written request for confidential treatment that accompanies the comment must include the factual and legal basis for the request, and must identify the specific portions of the comment to be withheld from the public record. *See* FTC Rule 4.9(c). Your comment will be kept confidential only if the General Counsel grants your request in accordance with the law and the public interest. Once your comment has been posted publicly at *www.regulations.gov,* we cannot redact or remove your comment unless you submit a confidentiality request that meets the requirements for such treatment under FTC Rule 4.9(c), and the General Counsel grants that request.

The FTC Act and other laws that the Commission administers permit the collection of public comments to consider and use in this proceeding, as appropriate. The Commission will consider all timely and responsive public comments that it receives on or before January 4, 2021. For information on the Commission's privacy policy, including routine uses permitted by the Privacy Act, see *https://www.ftc.gov/site-information/privacy-policy.*

Josephine Liu,

Assistant General Counsel for Legal Counsel.

[FR Doc. 2020–24094 Filed 10–30–20; 8:45 am]

BILLING CODE 6750–01–P

DEPARTMENT OF HEALTH AND HUMAN SERVICES

Centers for Disease Control and Prevention

[60-Day–21–0696; Docket No. CDC–2020–0111]

Proposed Data Collection Submitted for Public Comment and Recommendations

AGENCY: Centers for Disease Control and Prevention (CDC), Department of Health and Human Services (HHS).

ACTION: Notice with comment period.

SUMMARY: The Centers for Disease Control and Prevention (CDC), as part of its continuing effort to reduce public burden and maximize the utility of government information, invites the general public and other Federal agencies the opportunity to comment on a proposed and/or continuing information collection, as required by the Paperwork Reduction Act of 1995. This notice invites comment on a proposed information collection project titled National HIV Prevention Program Monitoring and Evaluation (NHM&E). NHM&E collects standardized HIV prevention program evaluation data from health departments and community-based organizations (CBOs) who receive federal funds for HIV prevention activities.

DATES: CDC must receive written comments on or before January 4, 2021.

ADDRESSES: You may submit comments, identified by Docket No. CDC–2020–0111 by any of the following methods:

- *Federal eRulemaking Portal: Regulations.gov.* Follow the instructions for submitting comments.
- *Mail:* Jeffrey M. Zirger, Information Collection Review Office, Centers for Disease Control and Prevention, 1600 Clifton Road NE, MS–D74, Atlanta, Georgia 30329.

Instructions: All submissions received must include the agency name and Docket Number. CDC will post, without change, all relevant comments to *Regulations.gov.*

Please note: Submit all comments through the Federal eRulemaking portal (*regulations.gov*) or by U.S. mail to the address listed above.

FOR FURTHER INFORMATION CONTACT: To request more information on the proposed project or to obtain a copy of the information collection plan and instruments, contact Jeffrey M. Zirger, Information Collection Review Office, Centers for Disease Control and Prevention, 1600 Clifton Road NE, MS–D74, Atlanta, Georgia 30329; phone: 404–639–7118; Email: *omb@cdc.gov.*

SUPPLEMENTARY INFORMATION: Under the Paperwork Reduction Act of 1995 (PRA) (44 U.S.C. 3501–3520), Federal agencies must obtain approval from the Office of Management and Budget (OMB) for each collection of information they conduct or sponsor. In addition, the PRA also requires Federal agencies to provide a 60-day notice in the **Federal Register** concerning each proposed collection of information, including each new proposed collection, each proposed extension of existing collection of information, and each reinstatement of previously approved information collection before submitting the collection to the OMB for approval. To comply with this requirement, we are publishing this notice of a proposed data collection as described below.

The OMB is particularly interested in comments that will help:

1. Evaluate whether the proposed collection of information is necessary for the proper performance of the functions of the agency, including whether the information will have practical utility;

2. Evaluate the accuracy of the agency's estimate of the burden of the proposed collection of information, including the validity of the methodology and assumptions used;

3. Enhance the quality, utility, and clarity of the information to be collected; and

4. Minimize the burden of the collection of information on those who are to respond, including through the use of appropriate automated, electronic, mechanical, or other technological collection techniques or other forms of information technology, *e.g.,* permitting electronic submissions of responses.

5. Assess information collection costs.

Proposed Project

National HIV Prevention Program Monitoring and Evaluation (NHM&E) (OMB Control No. 0920–0696, Exp. 10/31/2021)—Revision—National Center for HIV/AIDS, Viral Hepatitis, STD, and TB Prevention (NCHHSTP), Centers for Disease Control and Prevention (CDC).

Background and Brief Description

CDC seeks to request a three-year Office of Management and Budget (OMB) approval to revise the previously approved project and continue the collection of standardized HIV prevention program evaluation data from health departments and community-based organizations (CBOs) who receive federal funds for HIV prevention activities. Health department grantees have the options to key-enter or upload data to a CDC-provided web-based software application (EvaluationWeb®). CBO grantees may only key-enter data to the CDC-provided web-based software application.

This revision includes changes to the data variables to adjust to the different monitoring and evaluation needs of new funding announcements without a substantial change in burden.

The evaluation and reporting process is necessary to ensure that CDC receives standardized, accurate, thorough evaluation data from both health department and CBO grantees. For these reasons, CDC developed standardized NHM&E variables through extensive consultation with representatives from health departments, CBOs, and national partners (*e.g.,* The National Alliance of State and Territorial AIDS Directors and Urban Coalition of HIV/AIDS Prevention Services).

CDC requires CBOs and health departments who receive federal funds for HIV prevention to report nonidentifying, client-level and aggregate level, standardized evaluation data to: (1) Accurately determine the extent to which HIV prevention efforts are carried out, what types of agencies are providing services, what resources are allocated to those services, to whom services are being provided, and how these efforts have contributed to a reduction in HIV transmission; (2) improve ease of reporting to better meet these data needs; and (3) be accountable to stakeholders by informing them of HIV prevention activities and use of funds in HIV prevention nationwide.

CDC HIV prevention program grantees will collect, enter or upload, and report agency-identifying information, budget data, intervention information, and client demographics and behavioral risk characteristics with an estimate of 204,498 burden hours, representing no change from the previously approved, 204,498 burden hours. Data collection will include searching existing data sources, gathering and maintaining data, document compilation, review of data, and data entry or upload into the web-based system. There are no additional costs to respondents other than their time.

ESTIMATED ANNUALIZED BURDEN HOURS

Type of respondents	Form name	Number of respondents	Number of responses per respondent	Average burden per response (in hours)	Total burden (in hours)
Health Departments	Health Department Reporting	66	2	1,426.5	188,298
Community-based Organizations	Community-based Organization Reporting.	150	2	54	16,200
Total					204,498

Jeffrey M. Zirger,

Lead, Information Collection Review Office, Office of Scientific Integrity, Office of Science, Centers for Disease Control and Prevention.

[FR Doc. 2020–24231 Filed 10–30–20; 8:45 am]

BILLING CODE 4163–18–P

DEPARTMENT OF HEALTH AND HUMAN SERVICES

Awards Unsolicited Proposal; Catalog of Federal Domestic Assistance (CFDA) Number: 93.137 and 93.129

AGENCY: Office of Minority Health (OMH) and Office of the Assistant Secretary for Health, Department of Health and Human Services.

ACTION: Notice of award of an unsolicited request for funding to be awarded as a single project through two cooperative agreement awards to the American Heart Association (AHA), Dallas, Texas.

SUMMARY: OMH announces the award of a single-source award in response to an unsolicited proposal from the American Heart Association, Dallas, Texas. The proposal submitted was not solicited either formally or informally by any federal government official. The award is comprised of two cooperative agreements administered by OMH in collaboration with HRSA.

FOR FURTHER INFORMATION CONTACT: Paul Rodriguez at *paul.rodriguez@hhs.gov* or by telephone at 240–453–8208.

SUPPLEMENTARY INFORMATION:

Recipient: American Heart Association, Dallas, Texas.

Purpose of the Award: The Office of Minority Health (OMH) will award a cooperative agreement to AHA to improve COVID-related health outcomes for highly impacted racial and ethnic minorities by addressing hypertension as a key risk factor. In addition, OMH will award a cooperative agreement to AHA, on behalf of the Health Resources and Services Administration (HRSA), to provide technical assistance to HRSA-funded health centers to increase provider and clinician engagement in implementing evidence-based practices (*e.g.,* advanced self-measured blood pressure technology) to increase the number of adult patients with controlled hypertension and reduce the potential risk of COVID-related health outcomes. The two cooperative agreements will support a single national project that is expected to identify promising approaches/best practices that combine new blood pressure measurement technology, lifestyle/behavioral modifications and locally targeted media campaigns to address uncontrolled, including undiagnosed, high blood pressure in racial and ethnic minority, American Indian/Alaska Native and other vulnerable populations, given the association of hypertension with worse COVID–19 health outcomes.

The project is expected to support training and technical assistance to support HRSA-funded health centers' implementation of evidence-based interventions that combine remote blood pressure monitoring technology to reduce disparities in uncontrolled and undiagnosed high blood pressure among medically underserved communities

and populations, with a focus on racial and ethnic minorities. This award will provide training and technical assistance to approximately 350 HRSA-funded health centers serving approximately one million patients with the greatest opportunities to improve blood pressure control. Through a separate funding opportunity, HRSA anticipates providing funding to these 350 health centers to support their participation in the National Hypertension Control Initiative (HTN Initiative).

Amount of Awards: Approximately $32M ($17.5M OMH, $14.5M HRSA) for a project period of up to 3 years. The possible project total, including approximately $60M from HRSA to health centers, is approximately $92M ($17.5M OMH and $74.5M HRSA) and is subject to availability of funding and satisfactory performance.

Project Period: November 17, 2020–November 16, 2023.

This three-year HTN Initiative aligns with: (1) HHS' Strategic Plan goal to protect the health of Americans where they live, learn, work, and play (*https://www.hhs.gov/about/strategic-plan/overview/index.html#overview*); (2) the HHS Action Plan to Reduce Racial and Ethnic Health Disparities goal of advancing the health, safety and well-being of the American People (*https://www.minorityhealth.hhs.gov/npa/files/Plans/HHS/HHS_Plan_complete.pdf*); (3) the U.S. Surgeon General's Call to Action on Hypertension Control (*https://www.hhs.gov/about/news/2020/10/07/surgeon-general-releases-call-to-action-on-hypertension-control.html*); (4) OMH's overarching goal of supporting the sustainability and dissemination of health equity promoting policies, programs and practices and OMH's identification of hypertension as a clinical focus area (*https://www.minorityhealth.hhs.gov/omh/browse.aspx?lvl=1&lvlid=1*); and (5) HRSA's strategic goal to achieve health equity and enhance population health (*https://www.hrsa.gov/about/strategic-plan/index.html*) and HRSA's annual collection of data on health center patients with controlled hypertension (Uniform Data System (UDS) Health Outcomes and Disparities Table, *https://bphc.hrsa.gov/sites/default/files/bphc/datareporting/pdf/2020UDSTables.pdf*).

The primary purpose of the HTN Initiative is to establish a nationwide approach for improving health outcomes related to COVID–19 by addressing hypertension as a key risk factor for racial and ethnic minorities, American Indians/Alaska Natives and other vulnerable populations. This initiative will build partnerships and develop relationships within a national scope to support work with HRSA-funded health centers to:

- Improve health outcomes for racial and ethnic minority, American Indian/Alaska Native and other vulnerable populations with hypertension, including individuals with undiagnosed hypertension and pregnant and postpartum women;
- Increase the use of advanced self-measured blood pressure technology;
- Increase awareness of health programs and community services for the target population; and
- Increase patient and provider education and training.

OMH performed an objective review of the unsolicited proposal from the American Heart Association with subject matter assistance from HRSA's Bureau of Primary Health Care and external and internal proposal assessments. Based on this review, OMH determined that the proposal has merit. OMH funding will support the Community Outreach and Integration, Patient and Public Education, and Evaluation components of the project. HRSA funding will support the Healthcare Organizations and Healthcare Provider Training, and the Patient and Public Education components of the project.

As the nation's largest voluntary health organization and author of the national guidelines for cardiovascular risk factor prevention, AHA is uniquely positioned to implement this national initiative to address the acute need to improve COVID-related health outcomes for highly impacted racial and ethnic minorities by addressing hypertension as a key risk factor. Reducing this preventable and most prominent threat to our nation's health through clinical guideline and evidence-based intervention is a top organizational priority for AHA, particularly among underserved communities of color that experience higher prevalence of this critical risk factor for the leading causes of death and chronic diseases, including COVID–19.

This award is being made non-competitively because there is no current, pending, or planned funding opportunity announcement under which this proposal could compete.

As the Administration continues its response to the COVID–19 pandemic, addressing the related health disparities among racial and ethnic minority and American Indian/Alaska Native populations is an urgent challenge for HHS. Not awarding the HTN Initiative as a single source award will delay HHS' capacity to expand health center access to public health education, outreach, engagement and treatment services tailored to improve COVID–19 outcomes by addressing hypertension as a key risk factor for racial and ethnic minority and American Indian/Alaska Native populations. Delays in the award could contribute to higher rates of ''excess deaths'' as defined by the CDC among the populations of focus for the HTN Initiative (*https://www.cdc.gov/nchs/nvss/vsrr/covid19/excess_deaths.htm*).

Legislative Authority: Funding for OMH's cooperative agreement award is authorized under 42 U.S.C. 300u–6, (Section 1707 of the Public Health Service Act). Funding for HRSA's cooperative agreement award, which also will be administered by OMH under an interagency agreement, is authorized under Section 330(l) of the Public Health Service Act (42 U.S.C. 254b(l)).

Dated: October 27, 2020.

Felicia Collins,

RADM, Deputy Assistant Secretary for Minority Health.

[FR Doc. 2020–24150 Filed 10–30–20; 8:45 am]

BILLING CODE P

DEPARTMENT OF HEALTH AND HUMAN SERVICES

National Institutes of Health

Request for Information (RFI): Inviting Comments and Suggestions on the NIH-Wide Strategic Plan for COVID–19 Research

AGENCY: National Institutes of Health, HHS.

ACTION: Notice.

SUMMARY: This Request for Information (RFI) is intended to gather broad public input on the National Institutes of Health (NIH)-Wide Strategic Plan for COVID–19 Research. Because of the urgency and evolving nature of the pandemic, NIH intends this plan to be a living document, which will be continually updated to reflect new challenges presented by COVID–19. To ensure that it remains in step with public needs, this RFI invites stakeholders throughout the scientific research, advocacy, and clinical practice communities, as well as the general public to comment on the NIH-Wide Strategic Plan for COVID–19 Research. Organizations are strongly encouraged to submit a single response that reflects the views of their organization and their membership as a whole.

DATES: This RFI is open for public comment for a period of five weeks. Comments must be received by 11:59:59 p.m. (ET) on December 7, 2020 to ensure consideration.

ADDRESSES: All comments must be submitted electronically on the submission website, available at: *https://rfi.grants.nih.gov/?s=5f91a3efdb70000018003362*.

FOR FURTHER INFORMATION CONTACT: Please direct all inquiries to: Beth Walsh, *nihstrategicplan@od.nih.gov,* 301–496–4000.

SUPPLEMENTARY INFORMATION: Urgent public health measures are needed to control the spread of the novel coronavirus (SARS–CoV–2) and the disease it causes, coronavirus disease 2019, or COVID–19. Scientific research to improve basic understanding of SARS–CoV–2 and COVID–19, and to develop the necessary tools and approaches to better prevent, diagnose, and treat this disease is of paramount importance. The NIH-Wide Strategic Plan for COVID–19 Research (available at: *https://www.nih.gov/research-training/medical-research-initiatives/nih-wide-strategic-plan-covid-19-research*), released on July 13, 2020, provides a framework for achieving this goal. It describes how NIH is rapidly mobilizing diverse stakeholders, including the biomedical research community, industry, and philanthropic organizations, through new programs and existing resources, to lead a swift, coordinated research response to this global pandemic.

The plan outlines how NIH is implementing five Priorities, guided by three Crosscutting Strategies:

Priorities

- *Priority 1: Improve Fundamental Knowledge of SARS–CoV–2 and COVID–19*
  - Objective 1.1: Advance fundamental research for SARS–CoV–2 and COVID–19
  - Objective 1.2: Support research to develop preclinical models of SARS–CoV–2 infection and COVID–19
  - Objective 1.3: Advance the understanding of SARS–CoV–2 transmission and COVID–19 dynamics at the population level
  - Objective 1.4: Understand COVID–19 disease progression, recovery, and psychosocial and behavioral health consequences
- *Priority 2: Advance Detection and Diagnosis of COVID–19*
  - Objective 2.1: Support research to develop and validate new diagnostic technologies
  - Objective 2.2: Retool existing diagnostics for detection of SARS-CoV–2
  - Objective 2.3: Support research to develop and validate serological assays
- *Priority 3: Advance the Treatment of COVID–19*
  - Objective 3.1: Identify and develop new or repurposed treatments for SARS–CoV–2
  - Objective 3.2: Evaluate new, repurposed, or existing treatments and treatment strategies for COVID–19
  - Objective 3.3: Investigate strategies for access to and implementation of COVID–19 treatments
- *Priority 4: Improve Prevention of SARS–CoV–2 Infection*
  - Objective 4.1: Develop novel vaccines for the prevention of COVID–19
  - Objective 4.2: Develop and study other methods to prevent SARS–CoV–2 transmission
  - Objective 4.3: Develop effective implementation models for preventive measures
- *Priority 5: Prevent and Redress Poor COVID–19 Outcomes in Health Disparity and Vulnerable Populations*
  - Objective 5.1: Understand and address COVID–19 as it relates to health disparities and COVID–19—vulnerable populations in the United States
  - Objective 5.2: Understand and address COVID–19 maternal health and pregnancy outcomes
  - Objective 5.3: Understand and address age-specific factors in COVID–19
  - Objective 5.4: Address global health research needs from COVID–19

Crosscutting Strategies

- *Partnering to promote collaborative science*
  - Leverage existing NIH-funded global research networks and private sector, public, and non-profit relationships
  - Coordinate with Federal partners
  - Establish new public-private partnerships
- *Supporting the research workforce and infrastructure*
  - Conduct research to elucidate how COVID–19 impacts the scientific workforce
  - Provide research resources
  - Leverage intramural infrastructure to support extramural researchers
  - Conduct virtual peer review processes
- *Investing in data science*
  - Create new data science resources and analytical tools
  - Develop shared metrics and terminologies

NIH seeks comments on any or all of, but not limited to, the following topics:

- Significant research gaps or barriers not identified in the existing framework above;
- Resources required or lacking or existing leverageable resources (*e.g.,* existing partnerships, collaborations, or infrastructure) that could advance the strategic priorities;
- Emerging scientific advances or techniques in basic, diagnostic, therapeutic, or vaccine research that may accelerate the research priorities detailed in the framework above; and
- Additional ideas for bold, innovative research initiatives, processes, or data-driven approaches that could advance the response to COVID–19.

NIH encourages organizations (*e.g.,* patient advocacy groups, professional organizations) to submit a single response reflective of the views of the organization or membership as a whole.

Responses to this RFI are voluntary and may be submitted anonymously. Please do not include any personally identifiable information or any information that you do not wish to make public. Proprietary, classified, confidential, or sensitive information should not be included in your response. The Government will use the information submitted in response to this RFI at its discretion. The Government reserves the right to use any submitted information on public websites, in reports, in summaries of the state of the science, in any possible resultant solicitation(s), grant(s), or cooperative agreement(s), or in the development of future funding opportunity announcements. This RFI is for informational and planning purposes only and is not a solicitation for applications or an obligation on the part of the Government to provide support for any ideas identified in response to it. Please note that the Government will not pay for the preparation of any information submitted or for use of that information.

We look forward to your input and hope that you will share this RFI opportunity with your colleagues.

Dated: October 27, 2020.

Lawrence A. Tabak,

Principal Deputy Director, National Institutes of Health.

[FR Doc. 2020–24202 Filed 10–30–20; 8:45 am]

BILLING CODE 4140–01–P

DEPARTMENT OF HEALTH AND HUMAN SERVICES

National Institutes of Health

Proposed Collection; 60-Day Comment Request; NIH Office of Intramural Training & Education—Application, Registration, and Alumni Systems Office of the Director

AGENCY: National Institutes of Health (NIH), HHS.

ACTION: Notice.

SUMMARY: In compliance with the requirement of the Paperwork Reduction Act of 1995 to provide opportunity for public comment on proposed data collection projects, the National Institutes of Health (NIH) Office of Intramural Training & Education (OITE) will publish periodic summaries of proposed projects to be submitted to the Office of Management and Budget (OMB) for review and approval.

DATES: Comments regarding this information collection are best assured of having their full effect if received within 60 days of the date of this publication.

FOR FURTHER INFORMATION CONTACT: To obtain a copy of the data collection plans and instruments, submit comments in writing, or request more information on the proposed project, contact: Dr. Patricia Wagner, Program Analyst, Office of Intramural Training & Education (OITE), Office of Intramural Research (OIR), Office of the Director (OD), National Institutes of Health (NIH); 2 Center Drive: Building 2/Room 2E06; Bethesda, Maryland 20892 or call non-toll-free number 240–476–3619 or Email your request, including your address to: *wagnerpa@od.nih.gov.* Formal requests for additional plans and instruments must be requested in writing.

SUPPLEMENTARY INFORMATION: Section 3506(c)(2)(A) of the Paperwork Reduction Act of 1995 requires: Written comments and/or suggestions from the public and affected agencies are invited to address one or more of the following points: (1) Whether the proposed collection of information is necessary for the proper performance of the function of the agency, including whether the information will have practical utility; (2) The accuracy of the agency's estimate of the burden of the proposed collection of information, including the validity of the methodology and assumptions used; (3) Ways to enhance the quality, utility, and clarity of the information to be collected; and (4) Ways to minimize the burden of the collection of information on those who are to respond, including the use of appropriate automated, electronic, mechanical, or other technological collection techniques or other forms of information technology.

Proposed Collection Title: NIH Office of Intramural Training & Education—Application, Registration, and Alumni Systems, 0925–0299, exp., date, 06/30/2022, REVISION, Office of Intramural Training & Education (OITE), Office of Intramural Research (OIR), Office of the Director (OD), National Institutes of Health (NIH).

Need and Use of Information Collection: The Office of Intramural Training & Education (OITE) administers a variety of programs and initiatives to recruit pre-college through pre-doctoral educational level individuals into the National Institutes of Health Intramural Research Program (NIH–IRP) to facilitate their development into future biomedical scientists. The proposed information collection is necessary in order to determine the eligibility and quality of potential awardees for traineeships in these programs. The applications for admission consideration solicit information including: Personal information, ability to meet eligibility criteria, contact information, university-assigned student identification number, training program selection, scientific discipline interests, educational history, standardized examination scores, reference information, resume components, employment history, employment interests, dissertation research details, letters of recommendation, financial aid history, sensitive data, and travel information, as well as feedback questions about interviews and application submission experiences. Sensitive data collected on the applicants: Race, gender, ethnicity, relatives at NIH, and recruitment method, are made available only to OITE staff members or in aggregate form to select NIH offices and are not used by the admission committees for admission consideration. In addition, information to monitor trainee placement after departure from NIH is periodically collected.

OMB approval is requested for 3 years. There are no costs to respondents other than their time. The total estimated annualized burden hours are 13,858.

ESTIMATED ANNUALIZED BURDEN HOURS

Type of respondent	Number of respondents	Number of responses per respondent	Average time/ response (hours)	Total annual burden hours
High School Scientific Training & Enrichment Program (HiSTEP)—Orientation.	25	1	10/60	4
HiSTEP2—Orientation	25	1	10/60	4
HiSTEP & HiSTEP2—Alumni Tracking	125	2	30/60	125
Summer Internship Program (SIP)—Application.	8,000	1	45/60	6,000
SIP—Recommendation Letters	16,000	1	10/60	2,667
Amgen Scholars at NIH—Supplemental Application.	535	1	10/60	89
Amgen Scholars at NIH—Feedback	20	1	15/60	5
Amgen Scholars at NIH—Alumni Tracking	127	1	30/60	64
Community College Summer Enrichment Program (CCSEP)—Alumni Tracking.	158	1	10/60	26
College Summer Opportunities in Advanced Research (C–SOAR)—Alumni Tracking.	158	1	10/60	26
Graduate Summer Opportunities in Advanced Research (G–SOAR)—Alumni Tracking.	114	1	30/60	57
Graduate Data Science Summer Program (GDSSP)—Alumni Tracking.	30	1	30/60	15
Native American Visit Week—Application	15	1	20/60	5

ESTIMATED ANNUALIZED BURDEN HOURS—Continued

Type of respondent	Number of respondents	Number of responses per respondent	Average time/ response (hours)	Total annual burden hours
Native American Visit Week—Recommendation Letters.	15	1	10/60	3
Native American Visit Week—Feedback	15	1	15/60	4
Undergraduate Scholarship Program (UGSP)—Application.	125	1	60/60	125
UGSP—Recommendation Letters for Applicants.	375	1	10/60	63
UGSP—Exceptional Financial Need (EFN)—Completed by Applicant.	125	1	3/60	6
UGSP—EFN—Completed by University Staff	125	1	15/60	31
UGSP—Scholar Contract	25	1	10/60	4
UGSP—Evaluation of Scholar PayBack Period.	30	1	15/60	8
UGSP—Renewal Application	15	1	45/60	11
UGSP—Recommendation Letters for Renewals.	15	1	10/60	3
UGSP—Deferment Form—Completed by UGSP Scholar.	25	1	3/60	1
UGSP—Deferment Form—Completed by University Staff.	25	1	5/60	2
Postbaccalaureate Training Program (PBT)—Application.	2,250	1	45/60	1,688
PBT—Recommendation Letters	6,750	1	10/60	1,125
NIH Academy—Fellow & Certificate Programs Application.	300	1	15/60	75
NIH Academy—Enrichment Program Application.	300	1	15/60	75
Graduate Partnerships Program (GPP)—Application.	325	1	60/60	325
GPP—Recommendation Letters for Application.	975	1	10/60	163
GPP—Interview Experience Survey	30	1	10/60	5
GPP—Registration	175	1	15/60	44
GPP—Awards Certificate	75	1	30/60	38
MyOITE—User Accounts	6,000	1	3/60	300
MyOITE—NIH Alumni	500	1	15/60	125
OITE Careers Blog—Success Stories	7	1	45/60	5
Academic Internship Program (AIP)—Application.	500	1	45/60	375
AIP—Recommendation Letters	1,000	1	10/60	167
Totals	45,434	45,559		13,858

Dated: October 24, 2020.

Lawrence A. Tabak,

Principal Deputy Director, National Institutes of Health.

[FR Doc. 2020–24201 Filed 10–30–20; 8:45 am]

BILLING CODE 4140–01–P

DEPARTMENT OF HEALTH AND HUMAN SERVICES

National Institutes of Health

National Institute of Neurological Disorders and Stroke; Notice of Closed Meeting

Pursuant to section 10(d) of the Federal Advisory Committee Act, as amended, notice is hereby given of a meeting of the National Advisory Neurological Disorders and Stroke Council.

The meeting will be closed to the public in accordance with the provisions set forth in sections 552b(c)(4) and 552b(c)(6), Title 5 U.S.C., as amended. The grant applications and the discussions could disclose confidential trade secrets or commercial property such as patentable material, and personal information concerning individuals associated with the grant applications, the disclosure of which would constitute a clearly unwarranted invasion of personal privacy.

Name of Committee: National Advisory Neurological Disorders and Stroke Council.

Date: November 18, 2020.

Time: 12:00 p.m. to 2:00 p.m.

Agenda: To review and evaluate grant applications.

Place: National Institutes of Health, NSC Building, 6001 Executive Boulevard, Bethesda, MD 20892 (Virtual Meeting).

Contact Person: Robert Finkelstein, Ph.D., Director of Extramural Research, National Institute of Neurological Disorders and Stroke, NIH, 6001 Executive Blvd., Suite 3309, MSC 9531, Bethesda, MD 20892, (301) 496–9248, *finkelsr@ninds.nih.gov.*

Information is also available on the Institute's/Center's home page: *www.ninds.nih.gov,* where an agenda and any additional information for the meeting will be posted when available.

(Catalogue of Federal Domestic Assistance Program Nos. 93.853, Clinical Research Related to Neurological Disorders; 93.854, Biological Basis Research in the Neurosciences, National Institutes of Health, HHS)

Dated: October 27, 2020.

Tyeshia M. Roberson,

Program Analyst, Office of Federal Advisory Committee Policy.

[FR Doc. 2020–24176 Filed 10–30–20; 8:45 am]

BILLING CODE 4140–01–P

DEPARTMENT OF HEALTH AND HUMAN SERVICES

Substance Abuse and Mental Health Services Administration

Current List of HHS-Certified Laboratories and Instrumented Initial Testing Facilities Which Meet Minimum Standards To Engage in Urine and Oral Fluid Drug Testing for Federal Agencies

AGENCY: Substance Abuse and Mental Health Services Administration, HHS.

ACTION: Notice.

SUMMARY: The Department of Health and Human Services (HHS) notifies federal agencies of the laboratories and Instrumented Initial Testing Facilities (IITFs) currently certified to meet the standards of the Mandatory Guidelines for Federal Workplace Drug Testing Programs using Urine or Oral Fluid (Mandatory Guidelines).

FOR FURTHER INFORMATION CONTACT: Anastasia Donovan, Division of Workplace Programs, SAMHSA/CSAP, 5600 Fishers Lane, Room 16N06B, Rockville, Maryland 20857; 240–276–2600 (voice); *Anastasia.Donovan@samhsa.hhs.gov* (email).

SUPPLEMENTARY INFORMATION: A notice listing all currently HHS-certified laboratories and IITFs is published in the **Federal Register** during the first week of each month. If any laboratory or IITF certification is suspended or revoked, the laboratory or IITF will be omitted from subsequent lists until such time as it is restored to full certification under the Mandatory Guidelines.

If any laboratory or IITF has withdrawn from the HHS National Laboratory Certification Program (NLCP) during the past month, it will be listed at the end and will be omitted from the monthly listing thereafter.

This notice is also available on the internet at *https://www.samhsa.gov/workplace/resources/drug-testing/certified-lab-list.*

The Department of Health and Human Services (HHS) notifies federal agencies of the laboratories and Instrumented Initial Testing Facilities (IITFs) currently certified to meet the standards of the Mandatory Guidelines for Federal Workplace Drug Testing Programs (Mandatory Guidelines) using Urine and of the laboratories currently certified to meet the standards of the Mandatory Guidelines using Oral Fluid.

The Mandatory Guidelines using Urine were first published in the **Federal Register** on April 11, 1988 (53 FR 11970), and subsequently revised in the **Federal Register** on June 9, 1994 (59 FR 29908); September 30, 1997 (62 FR 51118); April 13, 2004 (69 FR 19644); November 25, 2008 (73 FR 71858); December 10, 2008 (73 FR 75122); April 30, 2010 (75 FR 22809); and on January 23, 2017 (82 FR 7920).

The Mandatory Guidelines using Oral Fluid were first published in the **Federal Register** on October 25, 2019 (84 FR 57554) with an effective date of January 1, 2020.

The Mandatory Guidelines were initially developed in accordance with Executive Order 12564 and section 503 of Public Law 100–71 and allowed urine drug testing only. The Mandatory Guidelines using Urine have since been revised, and new Mandatory Guidelines allowing for oral fluid drug testing have been published. The Mandatory Guidelines require strict standards that laboratories and IITFs must meet in order to conduct drug and specimen validity tests on specimens for federal agencies. HHS does not allow IITFs to conduct oral fluid testing.

To become certified, an applicant laboratory or IITF must undergo three rounds of performance testing plus an on-site inspection. To maintain that certification, a laboratory or IITF must participate in a quarterly performance testing program plus undergo periodic, on-site inspections.

Laboratories and IITFs in the applicant stage of certification are not to be considered as meeting the minimum requirements described in the HHS Mandatory Guidelines using Urine and/or Oral Fluid. An HHS-certified laboratory or IITF must have its letter of certification from HHS/SAMHSA (formerly: HHS/NIDA), which attests that the test facility has met minimum standards. HHS does not allow IITFs to conduct oral fluid testing.

HHS-Certified Laboratories Approved To Conduct Oral Fluid Drug Testing:

In accordance with the Mandatory Guidelines using Oral Fluid dated October 25, 2019 (84 FR 57554), the following HHS-certified laboratories meet the minimum standards to conduct drug and specimen validity tests on oral fluid specimens:

At this time, there are no laboratories certified to conduct drug and specimen validity tests on oral fluid specimens.

HHS-Certified Instrumented Initial Testing Facilities Approved To Conduct Urine Drug Testing

In accordance with the Mandatory Guidelines using Urine dated January 23, 2017 (82 FR 7920), the following HHS-certified IITFs meet the minimum standards to conduct drug and specimen validity tests on urine specimens:

Dynacare, 6628 50th Street NW, Edmonton, AB Canada T6B 2N7, 780–784–1190, (Formerly: Gamma-Dynacare Medical Laboratories)

HHS-Certified Laboratories Approved kto Conduct Urine Drug Testing

In accordance with the Mandatory Guidelines using Urine dated January 23, 2017 (82 FR 7920), the following HHS-certified laboratories meet the minimum standards to conduct drug and specimen validity tests on urine specimens:

Alere Toxicology Services, 1111 Newton St., Gretna, LA 70053, 504–361–8989/800–433–3823, (Formerly: Kroll Laboratory Specialists, Inc., Laboratory Specialists, Inc.)

Alere Toxicology Services, 450 Southlake Blvd., Richmond, VA 23236, 804–378–9130, (Formerly: Kroll Laboratory Specialists, Inc., Scientific Testing Laboratories, Inc.; Kroll Scientific Testing Laboratories, Inc.)

Clinical Reference Laboratory, Inc., 8433 Quivira Road, Lenexa, KS 66215–2802, 800–445–6917, Cordant Health Solutions, 2617 East L Street, Tacoma, WA 98421, 800–442–0438, (Formerly: STERLING Reference Laboratories)

Desert Tox, LLC, 5425 E Bell Rd, Suite 125, Scottsdale, AZ 85254, 602–457–5411/623–748–5045

DrugScan, Inc., 200 Precision Road, Suite 200, Horsham, PA 19044, 800–235–4890, Dynacare*, 245 Pall Mall Street, London, ONT, Canada N6A 1P4, 519–679–1630, (Formerly: Gamma-Dynacare Medical Laboratories)

ElSohly Laboratories, Inc., 5 Industrial Park Drive, Oxford, MS 38655, 662–236–2609

Laboratory Corporation of America Holdings, 7207 N Gessner Road, Houston, TX 77040, 713–856–8288/800–800–2387

Laboratory Corporation of America Holdings, 69 First Ave., Raritan, NJ 08869, 908–526–2400/800–437–4986, (Formerly: Roche Biomedical Laboratories, Inc.)

Laboratory Corporation of America Holdings, 1904 TW Alexander Drive, Research Triangle Park, NC 27709, 919–572–6900/800–833–3984, (Formerly: LabCorp Occupational Testing Services, Inc., CompuChem Laboratories, Inc.; CompuChem Laboratories, Inc., A Subsidiary of Roche Biomedical Laboratory; Roche CompuChem Laboratories, Inc., A Member of the Roche Group)

Laboratory Corporation of America Holdings, 1120 Main Street, Southaven, MS 38671, 866–827–8042/800–233–6339, (Formerly: LabCorp

Occupational Testing Services, Inc.; MedExpress/National Laboratory Center)

LabOne, Inc. d/b/a Quest Diagnostics, 10101 Renner Blvd., Lenexa, KS 66219, 913–888–3927/800–873–8845, (Formerly: Quest Diagnostics Incorporated; LabOne, Inc.; Center for Laboratory Services, a Division of LabOne, Inc.)

Legacy Laboratory Services Toxicology, 1225 NE 2nd Ave., Portland, OR 97232, 503–413–5295/800–950–5295

MedTox Laboratories, Inc., 402 W. County Road D, St. Paul, MN 55112, 651–636–7466/800–832–3244

Minneapolis Veterans Affairs Medical Center, Forensic Toxicology Laboratory, 1 Veterans Drive, Minneapolis, MN 55417, 612–725–2088, Testing for Veterans Affairs (VA) Employees Only

Pacific Toxicology Laboratories, 9348 DeSoto Ave., Chatsworth, CA 91311, 800–328–6942, (Formerly: Centinela Hospital Airport Toxicology Laboratory)

Phamatech, Inc., 15175 Innovation Drive, San Diego, CA 92128, 888–635–5840

Quest Diagnostics Incorporated, 1777 Montreal Circle, Tucker, GA 30084, 800–729–6432, (Formerly: SmithKline Beecham Clinical Laboratories; SmithKline Bio-Science Laboratories)

Quest Diagnostics Incorporated, 400 Egypt Road, Norristown, PA 19403, 610–631–4600/877–642–2216, (Formerly: SmithKline Beecham Clinical Laboratories; SmithKline Bio-Science Laboratories)

Redwood Toxicology Laboratory, 3700 Westwind Blvd., Santa Rosa, CA 95403, 800–255–2159

U.S. Army Forensic Toxicology Drug Testing Laboratory, 2490 Wilson St., Fort George G. Meade, MD 20755–5235, 301–677–7085, Testing for Department of Defense (DoD) Employees Only

*The Standards Council of Canada (SCC) voted to end its Laboratory Accreditation Program for Substance Abuse (LAPSA) effective May 12, 1998. Laboratories certified through that program were accredited to conduct forensic urine drug testing as required by U.S. Department of Transportation (DOT) regulations. As of that date, the certification of those accredited Canadian laboratories will continue under DOT authority. The responsibility for conducting quarterly performance testing plus periodic on-site inspections of those LAPSA-accredited laboratories was transferred to the U.S. HHS, with the HHS' NLCP contractor continuing to have an active role in the performance testing and laboratory inspection processes. Other Canadian laboratories wishing to be considered for the NLCP may apply directly to the NLCP contractor just as U.S. laboratories do.

Upon finding a Canadian laboratory to be qualified, HHS will recommend that DOT certify the laboratory (**Federal Register**, July 16, 1996) as meeting the minimum standards of the Mandatory Guidelines published in the **Federal Register** on January 23, 2017 (82 FR 7920). After receiving DOT certification, the laboratory will be included in the monthly list of HHS-certified laboratories and participate in the NLCP certification maintenance program.

Anastasia Marie Donovan,

Policy Analyst.

[FR Doc. 2020–24196 Filed 10–30–20; 8:45 am]

BILLING CODE 4160–20–P

DEPARTMENT OF HOMELAND SECURITY

Federal Emergency Management Agency

[Docket ID FEMA–2020–0001]

Notice of Adjustment of Minimum Project Worksheet Amount

AGENCY: Federal Emergency Management Agency, DHS.

ACTION: Notice.

SUMMARY: FEMA gives notice that the minimum Project Worksheet Amount under the Public Assistance program for disasters and emergencies declared on or after October 1, 2020, will be increased.

DATES: This adjustment applies to major disasters and emergencies declared on or after October 1, 2020.

FOR FURTHER INFORMATION CONTACT: Tod Wells, Recovery Directorate, Federal Emergency Management Agency, 500 C Street SW, Washington, DC 20472, (202) 646–3834.

SUPPLEMENTARY INFORMATION: 44 CFR 206.202(d)(2) provides that FEMA will annually adjust the minimum Project Worksheet amount under the Public Assistance program to reflect changes in the Consumer Price Index for All Urban Consumers published by the Department of Labor.

FEMA gives notice of an increase to $3,320 for the minimum amount that will be approved for any Project Worksheet under the Public Assistance program for all major disasters and emergencies declared on or after October 1, 2020.

FEMA bases the adjustment on an increase in the Consumer Price Index for All Urban Consumers of 1.3 percent for the 12-month period that ended in August 2020. This is based on information released by the Bureau of Labor Statistics at the U.S. Department of Labor on September 11, 2020.

Catalog of Federal Domestic Assistance No. 97.036, Disaster Grants—Public Assistance (Presidentially Declared Disasters).

Pete Gaynor,

Administrator, Federal Emergency Management Agency.

[FR Doc. 2020–24239 Filed 10–30–20; 8:45 am]

BILLING CODE 9111–23–P

DEPARTMENT OF HOMELAND SECURITY

Federal Emergency Management Agency

[Docket ID FEMA–2020–0001]

Notice of Maximum Amount of Assistance Under the Individuals and Households Program

AGENCY: Federal Emergency Management Agency, DHS.

ACTION: Notice.

SUMMARY: FEMA gives notice of the maximum amount for assistance under the Individuals and Households Program for emergencies and major disasters declared on or after October 1, 2020.

DATES: This adjustment applies to emergencies and major disasters declared on or after October 1, 2020.

FOR FURTHER INFORMATION CONTACT: Christopher B. Smith, Recovery Directorate, Federal Emergency Management Agency, 500 C Street SW, Washington, DC 20472, (202) 212–1000.

SUPPLEMENTARY INFORMATION: Section 408 of the Robert T. Stafford Disaster Relief and Emergency Assistance Act (the Stafford Act), 42 U.S.C. 5174, prescribes that FEMA must annually adjust the maximum amount for assistance provided under the Individuals and Households Program (IHP). FEMA gives notice that the maximum amount of IHP financial assistance provided to an individual or household under section 408 of the Stafford Act with respect to any single emergency or major disaster is $36,000 for housing assistance and $36,000 for other needs assistance. The increase in award amount is for any single emergency or major disaster declared on or after October 1, 2020. In addition, in accordance with 44 CFR 61.17(c), this increases the maximum amount of available coverage under any Group Flood Insurance Policy (GFIP) issued.

FEMA bases the adjustment on an increase in the Consumer Price Index for All Urban Consumers of 1.3 percent for the 12-month period, which ended in August 2020. The Bureau of Labor Statistics of the U.S. Department of Labor released the information on September 11, 2020.

Catalog of Federal Domestic Assistance No. 97.048, Federal Disaster Assistance to Individuals and Households in Presidentially Declared Disaster Areas; 97.049, Presidentially Declared Disaster Assistance—Disaster Housing Operations for Individuals and Households; 97.050, Presidentially Declared Disaster Assistance to Individuals and Households—Other Needs.

Pete Gaynor,

Administrator, Federal Emergency Management Agency.

[FR Doc. 2020–24235 Filed 10–30–20; 8:45 am]

BILLING CODE 9111–23–P

DEPARTMENT OF HOMELAND SECURITY

Federal Emergency Management Agency

[Docket ID FEMA–2020–0001]

Notice of Adjustment of Countywide Per Capita Impact Indicator

AGENCY: Federal Emergency Management Agency, DHS.

ACTION: Notice.

SUMMARY: FEMA gives notice that the countywide per capita impact indicator under the Public Assistance program for disasters declared on or after October 1, 2020, will be increased.

DATES: This adjustment applies to major disasters declared on or after October 1, 2020.

FOR FURTHER INFORMATION CONTACT: Tod Wells, Recovery Directorate, Federal Emergency Management Agency, 500 C Street SW, Washington, DC 20472, (202) 646–3834.

SUPPLEMENTARY INFORMATION: In assessing damages for area designations under 44 CFR 206.40(b), FEMA uses a countywide per capita indicator to evaluate the impact of the disaster at the county level. FEMA will adjust the countywide per capita impact indicator under the Public Assistance program to reflect annual changes in the Consumer Price Index for All Urban Consumers published by the Department of Labor.

FEMA gives notice of an increase in the countywide per capita impact indicator to $3.89 for all disasters declared on or after October 1, 2020.

FEMA bases the adjustment on an increase in the Consumer Price Index for All Urban Consumers of 1.3 percent for the 12-month period that ended in August 2020. The Bureau of Labor Statistics of the U.S. Department of Labor released the information on September 11, 2020.

Catalog of Federal Domestic Assistance No. 97.036, Disaster Grants—Public Assistance (Presidentially Declared Disasters).

Pete Gaynor,

Administrator, Federal Emergency Management Agency.

[FR Doc. 2020–24244 Filed 10–30–20; 8:45 am]

BILLING CODE 9111–23–P

DEPARTMENT OF HOMELAND SECURITY

Federal Emergency Management Agency

[Docket ID FEMA–2020–0001]

Notice of Adjustment of Statewide per Capita Impact Indicator

AGENCY: Federal Emergency Management Agency, DHS.

ACTION: Notice.

SUMMARY: FEMA gives notice that the statewide per capita impact indicator under the Public Assistance program for disasters declared on or after October 1, 2020, will be increased.

DATES: This adjustment applies to major disasters declared on or after October 1, 2020.

FOR FURTHER INFORMATION CONTACT: Tod Wells, Recovery Directorate, Federal Emergency Management Agency, 500 C Street SW, Washington, DC 20472, (202) 646–3834.

SUPPLEMENTARY INFORMATION: 44 CFR 206.48 provides that FEMA will adjust the statewide per capita impact indicator under the Public Assistance program to reflect changes in the Consumer Price Index for All Urban Consumers published by the Department of Labor.

FEMA gives notice that the statewide per capita impact indicator will be increased to $1.55 for all disasters declared on or after October 1, 2020.

FEMA bases the adjustment on an increase in the Consumer Price Index for All Urban Consumers of 1.3 percent for the 12-month period that ended in August 2020. The Bureau of Labor Statistics of the U.S. Department of Labor released the information on September 11, 2020.

Catalog of Federal Domestic Assistance No. 97.036, Disaster Grants—Public Assistance (Presidentially Declared Disasters).

Pete Gaynor,

Administrator, Federal Emergency Management Agency.

[FR Doc. 2020–24237 Filed 10–30–20; 8:45 am]

BILLING CODE 9111–23–P

DEPARTMENT OF HOMELAND SECURITY

Transportation Security Administration

[Docket No. TSA–2009–0024]

Enforcement Actions Summary

AGENCY: Transportation Security Administration, DHS.

ACTION: Notice of availability.

SUMMARY: TSA is providing notice that it has issued an annual summary of all enforcement actions taken by TSA under the authority granted in the Implementing Recommendations of the 9/11 Commission Act of 2007.

FOR FURTHER INFORMATION CONTACT: Nikki Harding, Assistant Chief Counsel, Civil Enforcement, Office of the Chief Counsel, TSA–2, Transportation Security Administration, 601 South 12th Street, Arlington, VA 20598–6002; telephone (571) 227–4777; facsimile (571) 227–1378; email *nikki.harding@tsa.dhs.gov.*

SUPPLEMENTARY INFORMATION:

Background

On August 3, 2007, section 1302(a) of the Implementing Recommendations of the 9/11 Commission Act of 2007 (the 9/11 Act), Public Law 110–53, 121 Stat. 392, gave TSA new authority to assess civil penalties for violations of any surface transportation requirements under title 49 of the United States Code (U.S.C.) and for any violations of chapter 701 of title 46 of the U.S.C., which governs transportation worker identification credentials (TWICs).

Section 1302(a) of the 9/11 Act, codified at 49 U.S.C. 114(u),[1] authorizes the Secretary of the DHS to impose civil penalties of up to $10,000 per violation of any surface transportation requirement under 49 U.S.C. or any requirement related to TWICs under 46 U.S.C. chapter 701. TSA exercises this function under delegated authority from

[1] Pursuant to division K, title I, sec. 1904(b)(1)(I), of Public Law 115–254, (132 Stat. 3186, 3545; October 5, 2018), the TSA Modernization Act—part of the FAA Reauthorization Act of 2018, former 49 U.S.C. 114(v) was redesignated as 49 U.S.C. 114(u).

the Secretary. *See* DHS Delegation No. 7060–2.

Under 49 U.S.C. 114(u)(7)(A), TSA is required to provide the public with an annual summary of all enforcement actions taken by TSA under this subsection; and include in each such summary the identifying information of each enforcement action, the type of alleged violation, the penalty or penalties proposed, and the final assessment amount of each penalty. This summary is for calendar year 2019. TSA will publish a summary of all enforcement actions taken under the statute in the beginning of the new calendar year to cover the previous calendar year.

Document Availability

You can get an electronic copy of both this notice and the enforcement actions summary on the internet by—

(1) Searching the electronic Federal Docket Management System (FDMS) web page at *http://www.regulations.gov,* Docket No. TSA–2009–0024; or

(2) Accessing the Government Printing Office's web page at *http://www.gpo.gov/fdsys/browse/collection.action?collectionCode=FR* to view the daily published **Federal Register** edition; or accessing the ''Search the **Federal Register** by Citation'' in the ''Related Resources'' column on the left, if you need to do a Simple or Advanced search for information, such as a type of document that crosses multiple agencies or dates.

In addition, copies are available by writing or calling the individual in the **FOR FURTHER INFORMATION CONTACT** section. Make sure to identify the docket number of this action.

Dated: October 27, 2020.

Kelly D. Wheaton,

Deputy Chief Counsel, Enforcement and Incident Management.

October 27, 2020

Annual Summary of Enforcement Actions Taken Under 49 U.S.C. 114(u)

Annual Report

Pursuant to 49 U.S.C. 114(u)(7)(A), TSA provides the following summary of enforcement actions taken by TSA in calendar year 2019 under section 114(u).[2]

Background

Section 114(u) of 49 U.S.C. gives the TSA authority to assess civil penalties for violations of any surface transportation requirements under 49 U.S.C. and for any violations of chapter 701 of 46 U.S.C., which governs TWICs. Specifically, section 114(u) authorizes the Secretary of the DHS to impose civil penalties of up to $10,000 per violation [3] for violations of any surface transportation requirement under 49 U.S.C. or any requirement related to TWIC under 46 U.S.C. chapter 701.[4]

TSA case No.	Type of violation	Penalty proposed/assessed
2020IND0019	TWIC Inspection of Credential (49 CFR 1570.9(a))	None (Warning Notice).
2018OAK0032	TWIC Inspection of Credential (49 CFR 1570.9 (a))	$1,680/$1,680.
2019BWI0076	TWIC Fraudulent Use (49 CFR 1570.7(d))	None (Warning Notice).
2019HOU0041	TWIC Fraudulent Use (49 CFR 1570.7(d))	$2,280/$2,280.
2019HOU0042	TWIC Fraudulent Use (49 CFR 1570.7(d))	None (Warning Notice).
2019JAX0080	TWIC Fraudulent Use (49 CFR 1570.7(d))	None (Warning Notice).
2019MSY0025	TWIC Fraudulent Use (49 CFR 1570.7(d))	None (Warning Notice).
2019OAK0051	TWIC Fraudulent Use (49 CFR 1570.7(d))	None (Warning Notice).
2019SAN0065	TWIC Fraudulent Use (49 CFR 1570.7(d))	None (Warning Notice).
2020JAX0009	TWIC Fraudulent Use (49 CFR 1570.7(d))	None (Warning Notice).
2020MCO0034	TWIC Fraudulent Use (49 CFR 1570.7(d))	None (Warning Notice).
2020SEA0052	TWIC Fraudulent Use (49 CFR 1570.7(d))	None (Warning Notice).
2020SEA0054	TWIC Fraudulent Use (49 CFR 1570.7(d))	None (Warning Notice).
2019BOS0092	TWIC Fraudulent Use (49 CFR 1570.7(c))	None (Warning Notice).
2019BOS0093	TWIC Fraudulent Use (49 CFR 1570.7(c))	None (Warning Notice).
2019BOS0147	TWIC Fraudulent Use (49 CFR 1570.7(c))	None (Warning Notice).
2019BOS0204	TWIC Fraudulent Use (49 CFR 1570.7(c))	None (Warning Notice).
2019BOS0211	TWIC Fraudulent Use (49 CFR 1570.7(c))	None (Warning Notice).
2019BWI0079	TWIC Fraudulent Use (49 CFR 1570.7(c))	None (Warning Notice).
2019BWI0086	TWIC Fraudulent Use (49 CFR 1570.7(c))	None (Warning Notice).
2019BWI0087	TWIC Fraudulent Use (49 CFR 1570.7(c))	None (Warning Notice).
2019BWI0103	TWIC Fraudulent Use (49 CFR 1570.7(c))	None (Warning Notice).
2019CLT0182	TWIC Fraudulent Use (49 CFR 1570.7(c))	None (Warning Notice).
2019HOU0038	TWIC Fraudulent Use (49 CFR 1570.7(c))	None (Warning Notice).
2019HOU0078	TWIC Fraudulent Use (49 CFR 1570.7(c))	$1,140/$1,140.
2019HOU0086	TWIC Fraudulent Use (49 CFR 1570.7(c))	None (Warning Notice).
2019HOU0088	TWIC Fraudulent Use (49 CFR 1570.7(c))	None (Warning Notice).
2019HOU0124	TWIC Fraudulent Use (49 CFR 1570.7(c))	$1,140/$1,140.
2019HOU0126	TWIC Fraudulent Use (49 CFR 1570.7(c))	$1,140/Pending.
2019HOU0149	TWIC Fraudulent Use (49 CFR 1570.7(c))	$1,170/Pending.
2019JAX0055	TWIC Fraudulent Use (49 CFR 1570.7(c))	None (Warning Notice).
2019JAX0056	TWIC Fraudulent Use (49 CFR 1570.7(c))	None (Warning Notice).
2019JAX0074	TWIC Fraudulent Use (49 CFR 1570.7(c))	None (Warning Notice).
2019JAX0075	TWIC Fraudulent Use (49 CFR 1570.7(c))	None (Warning Notice).

[2] 49 U.S.C. 114(u)(7)(A) states: In general.—the Secretary of Homeland Security shall—(i) provide an annual summary to the public of all enforcement actions taken by the Secretary under this subsection; and (ii) include in each such summary the docket number of each enforcement action, the type of alleged violation, the penalty or penalties proposed, and the final assessment amount of each penalty.

[3] Pursuant to title VII, sec. 701 of Public Law 114–74 (129 Stat. 583, 599; Nov. 2, 2015), the Federal Civil Penalties Inflation Adjustment Act Improvements Act of 2015—part of the Bipartisan Budget Act of 2015, this $10,000 civil penalty maximum is adjusted for inflation annually. *See* 49 CFR 1503.401(b).

[4] TSA exercises this function under delegated authority from the Secretary. *See* DHS Delegation No. 7060–2.

TSA case No.	Type of violation	Penalty proposed/assessed
2019JAX0078	TWIC Fraudulent Use (49 CFR 1570.7(c))	None (Warning Notice).
2019JAX0079	TWIC Fraudulent Use (49 CFR 1570.7(c))	None (Warning Notice).
2019JAX0089	TWIC Fraudulent Use (49 CFR 1570.7(c))	None (Warning Notice).
2019JAX0098	TWIC Fraudulent Use (49 CFR 1570.7(c))	None (Warning Notice).
2019JAX0102	TWIC Fraudulent Use (49 CFR 1570.7(c))	None (Warning Notice).
2019JAX0103	TWIC Fraudulent Use (49 CFR 1570.7(c))	None (Warning Notice).
2019JAX0106	TWIC Fraudulent Use (49 CFR 1570.7(c))	None (Warning Notice).
2019JAX0111	TWIC Fraudulent Use (49 CFR 1570.7(c))	None (Warning Notice).
2019JAX0113	TWIC Fraudulent Use (49 CFR 1570.7(c))	None (Warning Notice).
2019JAX0114	TWIC Fraudulent Use (49 CFR 1570.7(c))	None (Warning Notice).
2019JAX0158	TWIC Fraudulent Use (49 CFR 1570.7(c))	None (Warning Notice).
2019JFK0196	TWIC Fraudulent Use (49 CFR 1570.7(c))	None (Warning Notice).
2019LAX0225	TWIC Fraudulent Use (49 CFR 1570.7(c))	None (Warning Notice).
2019LAX0226	TWIC Fraudulent Use (49 CFR 1570.7(c))	$2,000/$2,000.
2019MCO0049	TWIC Fraudulent Use (49 CFR 1570.7(c))	$2,000/$2,000.
2019MCO0104	TWIC Fraudulent Use (49 CFR 1570.7(c))	None (Warning Notice).
2019MCO0177	TWIC Fraudulent Use (49 CFR 1570.7(c))	None (Warning Notice).
2019MCO0179	TWIC Fraudulent Use (49 CFR 1570.7(c))	None (Warning Notice).
2019MCO0212	TWIC Fraudulent Use (49 CFR 1570.7(c))	None (Warning Notice).
2019MCO0217	TWIC Fraudulent Use (49 CFR 1570.7(c))	None (Warning Notice).
2019MCO0218	TWIC Fraudulent Use (49 CFR 1570.7(c))	None (Warning Notice).
2019MCO0220	TWIC Fraudulent Use (49 CFR 1570.7(c))	None (Warning Notice).
2019MCO0227	TWIC Fraudulent Use (49 CFR 1570.7(c))	None (Warning Notice).
2019MCO0228	TWIC Fraudulent Use (49 CFR 1570.7(c))	None (Warning Notice).
2019MCO0230	TWIC Fraudulent Use (49 CFR 1570.7(c))	None (Warning Notice).
2019MCO0231	TWIC Fraudulent Use (49 CFR 1570.7(c))	None (Warning Notice).
2019MCO0232	TWIC Fraudulent Use (49 CFR 1570.7(c))	None (Warning Notice).
2019OAK0052	TWIC Fraudulent Use (49 CFR 1570.7(c))	None (Warning Notice).
2019OAK0079	TWIC Fraudulent Use (49 CFR 1570.7(c))	None (Warning Notice).
2019OAK0116	TWIC Fraudulent Use (49 CFR 1570.7(c))	None (Warning Notice).
2019OAK0117	TWIC Fraudulent Use (49 CFR 1570.7(c))	None (Warning Notice).
2019OAK0118	TWIC Fraudulent Use (49 CFR 1570.7(c))	None (Warning Notice).
2019OAK0122	TWIC Fraudulent Use (49 CFR 1570.7(c))	None (Warning Notice).
2019OAK0123	TWIC Fraudulent Use (49 CFR 1570.7(c))	None (Warning Notice).
2019OAK0124	TWIC Fraudulent Use (49 CFR 1570.7(c))	None (Warning Notice).
2019OAK0125	TWIC Fraudulent Use (49 CFR 1570.7(c))	None (Warning Notice).
2019OAK0126	TWIC Fraudulent Use (49 CFR 1570.7(c))	None (Warning Notice).
2019OAK0127	TWIC Fraudulent Use (49 CFR 1570.7(c))	None (Warning Notice).
2019OAK0131	TWIC Fraudulent Use (49 CFR 1570.7(c))	None (Warning Notice).
2019OAK0132	TWIC Fraudulent Use (49 CFR 1570.7(c))	None (Warning Notice).
2019OAK0133	TWIC Fraudulent Use (49 CFR 1570.7(c))	None (Warning Notice).
2019OAK0139	TWIC Fraudulent Use (49 CFR 1570.7(c))	None (Warning Notice).
2019OAK0172	TWIC Fraudulent Use (49 CFR 1570.7(c))	None (Warning Notice).
2019OAK0173	TWIC Fraudulent Use (49 CFR 1570.7(c))	None (Warning Notice).
2019OAK0174	TWIC Fraudulent Use (49 CFR 1570.7(c))	None (Warning Notice).
2019PDX0135	TWIC Fraudulent Use (49 CFR 1570.7(c))	None (Warning Notice).
2019PDX0139	TWIC Fraudulent Use (49 CFR 1570.7(c))	None (Warning Notice).
2019PDX0144	TWIC Fraudulent Use (49 CFR 1570.7(c))	None (Warning Notice).
2019RIC0012	TWIC Fraudulent Use (49 CFR 1570.7(c))	None (Warning Notice).
2019RIC0017	TWIC Fraudulent Use (49 CFR 1570.7(c))	$570/$570.
2019RIC0024	TWIC Fraudulent Use (49 CFR 1570.7(c))	None (Warning Notice).
2019RIC0028	TWIC Fraudulent Use (49 CFR 1570.7(c))	$1,140/$50.
2019RIC0031	TWIC Fraudulent Use (49 CFR 1570.7(c))	None (Warning Notice).
2019SAN0172	TWIC Fraudulent Use (49 CFR 1570.7(c))	None (Warning Notice).
2019SEA0229	TWIC Fraudulent Use (49 CFR 1570.7(c))	None (Warning Notice).
2019SEA0276	TWIC Fraudulent Use (49 CFR 1570.7(c))	None (Warning Notice).
2019SMF0103	TWIC Fraudulent Use (49 CFR 1570.7(c))	None (Warning Notice).
2019STL0086	TWIC Fraudulent Use (49 CFR 1570.7(c))	None (Warning Notice).
2020BOS0004	TWIC Fraudulent Use (49 CFR 1570.7(c))	None (Warning Notice).
2020HOU0009	TWIC Fraudulent Use (49 CFR 1570.7(c))	$3,500/Pending.
2020JAX0001	TWIC Fraudulent Use (49 CFR 1570.7(c))	None (Warning Notice).
2020JAX0009	TWIC Fraudulent Use (49 CFR 1570.7(c))	None (Warning Notice).
2020JAX0010	TWIC Fraudulent Use (49 CFR 1570.7(c))	None (Warning Notice).
2020JAX0031	TWIC Fraudulent Use (49 CFR 1570.7(c))	None (Warning Notice).
2020MCO0025	TWIC Fraudulent Use (49 CFR 1570.7(c))	None (Warning Notice).
2020MCO0043	TWIC Fraudulent Use (49 CFR 1570.7(c))	None (Warning Notice).
2020MSP0014	TWIC Fraudulent Use (49 CFR 1570.7(c))	None (Warning Notice).
2020OAK0004	TWIC Fraudulent Use (49 CFR 1570.7(c))	None (Warning Notice).
2020OAK0020	TWIC Fraudulent Use (49 CFR 1570.7(c))	None (Warning Notice).
2020OAK0041	TWIC Fraudulent Use (49 CFR 1570.7(c))	None (Warning Notice).
2020PDX0023	TWIC Fraudulent Use (49 CFR 1570.7(c))	None (Warning Notice).
2020PDX0028	TWIC Fraudulent Use (49 CFR 1570.7(c))	None (Warning Notice).
2020SAN0006	TWIC Fraudulent Use (49 CFR 1570.7(c))	None (Warning Notice).
2020SEA0048	TWIC Fraudulent Use (49 CFR 1570.7(c))	None (Warning Notice).

TSA case No.	Type of violation	Penalty proposed/assessed
2020SEA0049	TWIC Fraudulent Use (49 CFR 1570.7(c))	None (Warning Notice).
2020SEA0051	TWIC Fraudulent Use (49 CFR 1570.7(c))	None (Warning Notice).
2019BWI0084	TWIC Fraudulent Use (49 CFR 1570.7(c) and (d))	None (Warning Notice).
2019BWI0088	TWIC Fraudulent Use (49 CFR 1570.7(c) and (d))	None (Warning Notice).
2019BWI0096	TWIC Fraudulent Use (49 CFR 1570.7(c) and (d))	None (Warning Notice).
2019BWI0106	TWIC Fraudulent Use (49 CFR 1570.7(c) and (d))	None (Warning Notice).
2019BWI0107	TWIC Fraudulent Use (49 CFR 1570.7(c) and (d))	None (Warning Notice).
2019BWI0108	TWIC Fraudulent Use (49 CFR 1570.7(c) and (d))	None (Warning Notice).
2019BWI0113	TWIC Fraudulent Use (49 CFR 1570.7(c) and (d))	None (Warning Notice).
2019BWI0116	TWIC Fraudulent Use (49 CFR 1570.7(c) and (d))	None (Warning Notice).
2019BWI0117	TWIC Fraudulent Use (49 CFR 1570.7(c) and (d))	None (Warning Notice).
2019BWI0121	TWIC Fraudulent Use (49 CFR 1570.7(c) and (d))	None (Warning Notice).
2019BWI0126	TWIC Fraudulent Use (49 CFR 1570.7(c) and (d))	None (Warning Notice).
2019CLE0189	TWIC Fraudulent Use (49 CFR 1570.7(c) and (d))	None (Warning Notice).
2019CLE0190	TWIC Fraudulent Use (49 CFR 1570.7(c) and (d))	None (Warning Notice).
2019MCO0180	TWIC Fraudulent Use (49 CFR 1570.7(c) and (d))	None (Warning Notice).
2019RIC0023	TWIC Fraudulent Use (49 CFR 1570.7(c) and (d))	$3,000/$500.
2019RIC0030	TWIC Fraudulent Use (49 CFR 1570.7(c) and (d))	$250/$250.
2020BWI0006	TWIC Fraudulent Use (49 CFR 1570.7(c) and (d))	None (Warning Notice).
2020BWI0014	TWIC Fraudulent Use (49 CFR 1570.7(c) and (d))	None (Warning Notice).
2020MCO0043	TWIC Fraudulent Use (49 CFR 1570.7(c) and (d))	None (Warning Notice).
2019HOU0085	TWIC Fraudulent Use (49 CFR 1570.7(b))	$1,140/$1,140.
2016OAK0128	TWIC Fraudulent Use (49 CFR 1570.7(a))	$4,000/$1,000.
2017MSY0190	TWIC Fraudulent Use (49 CFR 1570.7(a))	Pending.
2018SAN0173	TWIC Fraudulent Use (49 CFR 1570.7(a))	$250/Pending.
2018SEA0138	TWIC Fraudulent Use (49 CFR 1570.7(a))	$1,120/$1,120.
2018SEA0172	TWIC Fraudulent Use (49 CFR 1570.7(a))	$1,120/$1,120.
2018SEA0196	TWIC Fraudulent Use (49 CFR 1570.7(a))	$1,120/$1,120.
2018SEA0247	TWIC Fraudulent Use (49 CFR 1570.7(a))	$560/$560.
2019RIC0006	TWIC Fraudulent Use (49 CFR 1570.7(a))	None (Warning Notice).
2019BWI0053	TWIC Fraudulent Use (49 CFR 1570.7(a) and (c))	None (Warning Notice).
2019HOU0057	TWIC Fraudulent Use (49 CFR 1570.7(a) and (c))	$3,420/$500.
2020MIA0035	TWIC Fraudulent Use (49 CFR 1570.7(a) and (c))	None (Warning Notice).
2018SEA0029	TWIC Access Control (49 CFR 1570.7(d))	$4,000/$4,000.
2017MSY0184	TWIC Access Control (49 CFR 1570.7(c))	Pending.
2017MSY0189	TWIC Access Control (49 CFR 1570.7(c))	Pending.
2018HOU0154	TWIC Access Control (49 CFR 1570.7(c))	$1,120/$1,120.
2018MSY0045	TWIC Access Control (49 CFR 1570.7(c))	None (Warning Notice).
2018RIC0088	TWIC Access Control (49 CFR 1570.7(c))	$1,120/$560.
2018SAN0067	TWIC Access Control (49 CFR 1570.7(c))	$250/Pending.
2018SEA0197	TWIC Access Control (49 CFR 1570.7(c))	$1,120/$1,120.
2018SEA0217	TWIC Access Control (49 CFR 1570.7(c))	$1,120/None (Consent Order).
2018SEA0297	TWIC Access Control (49 CFR 1570.7(c))	$1,120/$1,120.
2018SEA0298	TWIC Access Control (49 CFR 1570.7(c))	None (Warning Notice).
2018SEA0358	TWIC Access Control (49 CFR 1570.7(c))	$1,120/$1,120.
2018SEA0356	TWIC Access Control (49 CFR 1570.7 (c))	$2,235/$1,000.
2019SAT0125	Transfer of Railcar Custody (49 CFR 1580.107(b))	$22,820/$13,000.
2019CMH0109	Reporting Security Concerns (49 CFR 1580.105(b))	None (Letter of Correction).
2019HOU0104	Reporting Railcar Location (49 CFR 1580.103(g))	None (Warning Notice).
2019HOU0073	Reporting Railcar Location (49 CFR 1580.103(b) and (c) and (f))	None (Warning Notice).
2019ELP0046	Railcar Transfer of Custody (49 CFR 1580.107(c)) and Reporting Security Concerns (49 CFR 1580.203).	None (Notice of Noncompliance).
2019DTW0192	Railcar Transfer of Custody (49 CFR 1580.107(c))	None (Letter of Correction).
2019MCO0149	Rail Security Coordinator (49 CFR 1580.201(d))	None (Notice of Noncompliance).

[FR Doc. 2020–24180 Filed 10–30–20; 8:45 am]

BILLING CODE 9110–05–P

DEPARTMENT OF HOMELAND SECURITY

U.S. Citizenship and Immigration Services

[CIS No. 2673–20; DHS Docket No. USCIS–2014–0004]

RIN 1615–ZB79

Extension of the Designation of South Sudan for Temporary Protected Status

AGENCY: U.S. Citizenship and Immigration Services, Department of Homeland Security.

ACTION: Notice.

SUMMARY: Through this notice, the Department of Homeland Security (DHS) announces that the Secretary of Homeland Security (Secretary) is extending the designation of South Sudan for Temporary Protected Status (TPS) for 18 months, from November 3, 2020, through May 2, 2022. The extension allows currently eligible TPS beneficiaries to retain TPS through May 2, 2022, so long as they otherwise continue to meet the eligibility requirements for TPS. This notice also

sets forth procedures necessary for nationals of South Sudan (or aliens having no nationality who last habitually resided in South Sudan) to re-register for TPS and to apply for Employment Authorization Documents (EADs) with U.S. Citizenship and Immigration Services (USCIS). USCIS will issue new EADs with a May 2, 2022, expiration date to eligible beneficiaries under South Sudan's TPS designation who timely re-register and apply for EADs under this extension.

DATES: *Extension of Designation of South Sudan for TPS:* The 18-month extension of the TPS designation of South Sudan is effective November 3, 2020, and will remain in effect through May 2, 2022. The 60-day re-registration period runs from November 2, 2020 through January 4, 2021. (*Note:* It is important for re-registrants to timely re-register during this 60-day period and not to wait until their EADs expire.)

FOR FURTHER INFORMATION CONTACT:

- You may contact Maureen Dunn, Chief, Humanitarian Affairs Division, Office of Policy and Strategy, U.S. Citizenship and Immigration Services, U.S. Department of Homeland Security, by mail at 20 Massachusetts Avenue NW, Washington, DC 20529–2060, or by phone at 800–375–5283.
- For further information on TPS, including guidance on the re-registration process and additional information on eligibility, please visit the USCIS TPS web page at *www.uscis.gov/tps.* You can find specific information about this extension of South Sudan's TPS designation by selecting ''South Sudan'' from the menu on the left side of the TPS web page.
- If you have additional questions about TPS, please visit *uscis.gov/tools.* Our online virtual assistant, Emma, can answer many of your questions and point you to additional information on our website. If you are unable to find your answers there, you may also call our USCIS Contact Center at 800–375–5283 (TTY 800–767–1833).
- Applicants seeking information about the status of their individual cases may check Case Status Online, available on the USCIS website at *www.uscis.gov,* or visit the USCIS Contact Center at *uscis.gov/contactcenter.*
- Further information will also be available at local USCIS offices upon publication of this notice.

SUPPLEMENTARY INFORMATION:

Table of Abbreviations

BIA—Board of Immigration Appeals
CFR—Code of Federal Regulations
DHS—U.S. Department of Homeland Security
DOS—U.S. Department of State
EAD—Employment Authorization Document
FNC—Final Nonconfirmation
Form I–765—Application for Employment Authorization
Form I–797—Notice of Action
Form I–821—Application for Temporary Protected Status
Form I–9—Employment Eligibility Verification
Form I–912—Request for Fee Waiver
Form I–94—Arrival/Departure Record
FR—Federal Register
Government—U.S. Government
IJ—Immigration Judge
INA—Immigration and Nationality Act
IER—U.S. Department of Justice Civil Rights Division, Immigrant and Employee Rights Section
SAVE—USCIS Systematic Alien Verification for Entitlements Program
Secretary—Secretary of Homeland Security
TNC—Tentative Nonconfirmation
TPS—Temporary Protected Status
TTY—Text Telephone
USCIS—U.S. Citizenship and Immigration Services
U.S.C.—United States Code

Through this notice, DHS sets forth procedures necessary for eligible nationals of South Sudan (or aliens having no nationality who last habitually resided in South Sudan) to re-register for TPS and to apply for renewal of their EADs with USCIS. Re-registration is limited to aliens who have previously registered for TPS under the designation of South Sudan and whose applications have been granted.

For aliens who have already been granted TPS under South Sudan's designation, the 60-day re-registration period runs from November 2, 2020 through January 4, 2021. USCIS will issue new EADs with a May 2, 2022, expiration date to eligible South Sudanese TPS beneficiaries who timely re-register and apply for EADs. Given the timeframes involved with processing TPS re-registration applications, DHS recognizes that all re-registrants may not receive new EADs before their current EADs expire on November 2, 2020. Accordingly, through this **Federal Register** notice, DHS automatically extends the validity of these EADs previously issued under the TPS designation of South Sudan for 180 days, through May 1, 2021. Therefore, TPS beneficiaries can show their EADs with (1) a November 2, 2020 expiration date and (2) an A–12 or C–19 category code as proof of continued employment authorization through May 1, 2021. This notice explains how TPS beneficiaries and their employers may determine which EADs are automatically extended and how this affects the Employment Eligibility Verification (Form I–9), E-Verify, and USCIS Systematic Alien Verification for Entitlements (SAVE) processes.

Aliens who have a South Sudan-based Application for Temporary Protected Status (Form I–821) and/or Application for Employment Authorization (Form I–765) that was still pending as of November 2, 2020 do not need to file either application again. If USCIS approves an alien's Form I–821, USCIS will grant the alien TPS through May 2, 2022. Similarly, if USCIS approves a pending TPS-related Form I–765, USCIS will issue the alien a new EAD that will be valid through the same date. There are currently approximately 98 beneficiaries under South Sudan's TPS designation.

What is Temporary Protected Status (TPS)?

- TPS is a temporary immigration status granted to eligible nationals of a country designated for TPS under the Immigration and Nationality Act (INA), or to eligible aliens without nationality who last habitually resided in the designated country.
- During the TPS designation period, TPS beneficiaries are eligible to remain in the United States, may not be removed, and are authorized to obtain EADs so long as they continue to meet the requirements of TPS.
- TPS beneficiaries may also apply for and be granted travel authorization as a matter of discretion. Upon return from such authorized travel, TPS beneficiaries retain the same immigration status they had prior to the travel.
- The granting of TPS does not result in or lead to lawful permanent resident status.
- To qualify for TPS, beneficiaries must meet the eligibility standards at INA section 244(c)(1)–(2), 8 U.S.C. 1254a(c)(1)–(2).
- When the Secretary terminates a country's TPS designation, beneficiaries return to one of the following:
  - The same immigration status or category that they maintained before TPS, if any (unless that status or category has since expired or been terminated); or
  - Any other lawfully obtained immigration status or category they received while registered for TPS, as long as it is still valid beyond the date TPS terminates.

When was South Sudan designated for TPS?

South Sudan was initially designated on October 13, 2011, on the dual bases of ongoing armed conflict and extraordinary and temporary conditions in South Sudan that prevented nationals

of South Sudan from safely returning. *See Designation of Republic of South Sudan for Temporary Protected Status,* 76 FR 63629 (Oct. 13, 2011). Following the initial designation, the Secretary extended and newly designated South Sudan for TPS in 2013, 2014, and 2016. *See Extension and Redesignation of South Sudan for Temporary Protected Status,* 78 FR 1866 (Jan. 9, 2013); *Extension and Redesignation of South Sudan for Temporary Protected Status,* 79 FR 52019 (Sept. 2, 2014); *Extension and Redesignation of South Sudan for Temporary Protected Status,* 81 FR 4051 (Jan. 25, 2016). In 2017, DHS extended TPS for South Sudan, based on ongoing armed conflict and extraordinary and temporary conditions. *See Extension of South Sudan for Temporary Protected Status,* 82 FR 44205 (Sept. 21, 2017). Most recently, in 2019, the Secretary extended South Sudan's TPS designation for 18 months, based on ongoing armed conflict and extraordinary and temporary conditions. *See Extension of the Designation of South Sudan for Temporary Protected Status,* 84 FR 13688 (Apr. 5, 2019).

What authority does the Secretary have to extend the designation of South Sudan for TPS?

Section 244(b)(1) of the INA, 8 U.S.C. 1254a(b)(1), authorizes the Secretary, after consultation with appropriate agencies of the U.S. Government (Government), to designate a foreign state (or part thereof) for TPS if the Secretary determines that certain country conditions exist.[1] The decision to designate any foreign state (or part thereof) is a discretionary decision, and there is no judicial review of any determination with respect to the designation, or termination of, or extension of, a designation. *See id.,* INA section (b)(5)(A), 8 U.S.C. 1265a(b)(5)(A). The Secretary, in his discretion, may then grant TPS to eligible nationals of that foreign state (or eligible aliens having no nationality who last habitually resided in the designated country). *See* INA section 244(a)(1)(A), 8 U.S.C. 1254a(a)(1)(A).

At least 60 days before the expiration of a country's TPS designation or extension, the Secretary, after consultation with appropriate Government agencies, must review the conditions in the foreign state designated for TPS to determine whether the conditions for the TPS designation continue to be met. *See* INA section 244(b)(3)(A), 8 U.S.C. 1254a(b)(3)(A). If the Secretary does not determine that the foreign state no longer meets the conditions for TPS designation, the designation will be extended for an additional period of 6 months or, in the Secretary's discretion, 12 or 18 months. *See* INA section 244(b)(3)(A), (C), 8 U.S.C. 1254a(b)(3)(A), (C). If the Secretary determines that the foreign state no longer meets the conditions for TPS designation, the Secretary must terminate the designation. *See* INA section 244(b)(3)(B), 8 U.S.C. 1254a(b)(3)(B).

Why is the Secretary extending the TPS designation for South Sudan through May 2, 2022?

DHS has reviewed conditions in South Sudan. Based on the review, the Secretary has determined that an 18-month extension is warranted because the ongoing armed conflict and extraordinary and temporary conditions supporting South Sudan's TPS designation remain.

On February 21, 2020, President Salva Kiir Mayardit dissolved the incumbent government and appointed the Chairman of the Sudan People's Liberation Movement/Army-In Opposition (SPLM/A–IO), Riek Machar Teny, as First Vice-President, launching the formation of the Revitalized Transitional Government of National Unity. Despite a decrease in large-scale fighting and limited progress on the country's political transition, ongoing armed conflict persists in several areas in South Sudan among both signatories and non-signatories to the peace agreement, according to the U.S. Department of State (DOS). DOS reported the continuing prevalance of incidents of armed groups attacking civilians—consistently the leading form of violence throughout the conflict. In addition, high military and ethnic militia mobilization, armed groups' readiness to resort to violence, and a lack of accountability persist, according to DOS.

Outbreaks of armed conflict in 2019 and 2020 among SPLM/A, SPLM/A–IO, and non-signatory groups included sporadic fighting in Central and Eastern Equatoria states, where hostilities contributed to the targeting of civilians through armed attacks, abductions, and kidnappings, according to the United Nations Panel of Experts on South Sudan. Fighting in Upper Nile state between SPLM/A and SPLM/A–IO forces led to attacks against civilians, including murders, looting, and sexual violence, and provoked extensive civilian displacement. In Western Bahr el-Ghazal state, internal SPLM/A leadership disputes erupted, leading to conflict-related incidents of sexual violence and the kidnapping of civilians, according to United Nations reporting. In Warrap state, heavy clashes erupted between armed civilians and government forces carrying out a disarmament project, resulting in many deaths. Both DOS and the United Nations reported that the intensity of intercommunal violence increased in 2019 and 2020, as localized competition for resources was exacerbated by adverse weather conditions and struggles for dominance along ethnic, tribal, and subclan lines.

Sexual and gender-based violence (SGBV) remains pervasive, with both state and non-state armed groups continuing to use SGBV as a weapon of war, according to DOS. SPLM/A and SPLM/A–IO forces continue to conscript children under 15 years of age into their ranks, according to the United Nations Commission on Human Rights in South Sudan. In 2019 and 2020, DOS and the United Nations Panel of Experts on South Sudan reported that state security forces suppressed political and civil activities, arbitrarily detaining civilians and engaging in torture and extrajudicial killings.

South Sudan continues to experience serious humanitarian conditions, including significant levels of civilian displacement and food insecurity, significant impediments to humanitarian assistance, and a severe economic crisis, according to DOS. The United Nations estimates that 7.5 million people, over 60 percent of the South Sudan's population, are dependent on humanitarian assistance. All of South Sudan continues to experience food insecurity and an estimated 6.5 million people, nearly 56 percent of the total population, are acutely food insecure, according to DOS. DOS reports that continued drought conditions in some parts of the country and flooding in other areas exacerbate food insecurity among conflict-affected populations.

The total number of displaced individuals has slightly decreased since South Sudan's 2019 TPS extension; however, conflict and intercommunal clashes continue to drive internal displacement, and insecurity remains a key concern for many displaced people, according to UNOCHA. Currently, nearly 3.9 million South Sudanese are displaced, a reduction of 330,000 since November 2018, when an estimated 4.2

[1] As of March 1, 2003, in accordance with section 1517 of title XV of the Homeland Security Act of 2002, Public Law 107–296, 116 Stat. 2135, any reference to the Attorney General in a provision of the INA describing functions transferred from the Department of Justice to DHS ''shall be deemed to refer to the Secretary'' of Homeland Security. *See* 6 U.S.C. 557 (codifying the Homeland Security Act of 2002, tit. XV, section 1517).

million South Sudanese were reported displaced. 1.67 million South Sudanese are internally displaced, and an estimated 2.2 million South Sudanese are refugees or asylum-seekers in neighboring countries as of June 2020, according to the United Nations High Commissioner for Refugees (UNHCR). UNHCR reports 214,142 South Sudanese refugees have spontaneously returned since the revitalized peace agreement was signed in September 2018, although these returns significantly slowed in the first half of 2020 due to escalating intercommunal violence and COVID–19 border restrictions. According to DOS, the United Nations Mission in South Sudan (UNMISS) hosted more than 181,000 civilians at six civilian protection sites within UNMISS bases as of June 2020.

After contracting for four consecutive years, South Sudan's economy grew 3.2 percent in the 2018/19 Fiscal Year, largely due to a rebound in the oil sector, according to the World Bank. Nevertheless, oil sector shocks continue to impact the economy and the government's ability to service debts and fulfill obligations. In August 2020, citing plummeting oil revenues, a senior Central Bank official reported that the government had run out of foreign exchange reserves.

DOS assesses that South Sudan remains in a deep economic crisis, with further deterioration on the horizon. Over 88 percent of the population lives below the poverty line—an increase from 80 percent in 2016—and livelihoods remain concentrated in low productive, unpaid agriculture and pastoralist work. The rate of inflation increased from 40 percent in December 2018 to 86 percent in June 2019, according to World Bank estimates. The COVID–19 pandemic has contributed to further increases in the prices of basic food items and a reduction in food imports, according to the Assessment Capacities Project (ACAPS), a consortium of humanitarian non-profit organizations.

Based upon this review, and after consultation with appropriate Government agencies, the Secretary has determined that:

- The conditions supporting South Sudan's designation for TPS continue to be met. *See* INA section 244(b)(3)(A) and (C), 8 U.S.C. 1254a(b)(3)(A) and (C).
- There continues to be an ongoing armed conflict in South Sudan and, due to such conflict, requiring the return to South Sudan of South Sudanese nationals (or aliens having no nationality who last habitually resided in South Sudan) would pose a serious threat to their personal safety. *See* INA section 244(b)(1)(A), 8 U.S.C. 1254a(b)(1)(A).
- There continue to be extraordinary and temporary conditions in South Sudan that prevent South Sudanese nationals (or aliens having no nationality who last habitually resided in South Sudan) from returning to South Sudan in safety, and it is not contrary to the national interest of the United States to permit South Sudanese TPS beneficiaries to remain in the United States temporarily. *See* INA section 244(b)(1)(C), 8 U.S.C. 1254a(b)(1)(C).
- The designation of South Sudan for TPS should be extended for an 18-month period, from November 3, 2020, through May 2, 2022. *See* INA section 244(b)(3)(C), 8 U.S.C. 1254a(b)(3)(C).

Notice of Extension of the TPS Designation of South Sudan

By the authority vested in me as Secretary under INA section 244, 8 U.S.C. 1254a, I have determined, after consultation with the appropriate Government agencies, the conditions supporting South Sudan's designation for TPS continue to be met. *See* INA section 244(b)(3)(A), 8 U.S.C. 1254a(b)(3)(A). On the basis of this determination, I am extending the existing designation of TPS for South Sudan for 18 months, from November 3, 2020, through May 2, 2022. *See* INA section 244(b)(1)(A), (b)(1)(C); 8 U.S.C. 1254a(b)(1)(A), (b)(1)(C).

The Acting Secretary of Homeland Security, Chad F. Wolf, having reviewed and approved this document, has delegated the authority to electronically sign this document to Chad R. Mizelle, who is the Senior Official Performing the Duties of the General Counsel for DHS, for purposes of publication in the **Federal Register**.

Chad R. Mizelle,

Senior Official Performing the Duties of the General Counsel, U.S. Department of Homeland Security.

Required Application Forms and Application Fees To Re-Register for TPS

To re-register for TPS based on the designation of South Sudan, you must submit an Application for Temporary Protected Status (Form I–821). There is no Form I–821 fee for re-registration. *See* 8 CFR 244.17. You may be required to pay the biometric services fee. Please see additional information under the ''Biometric Services Fee'' section of this notice.

Through this **Federal Register** notice, your existing EAD issued under the TPS designation of South Sudan with the expiration date of November 2, 2020, is automatically extended for 180 days, through May 1, 2021. Although not required to do so, if you want to obtain a new EAD valid through May 2, 2022, you must file an Application for Employment Authorization (Form I–765) and pay the Form I–765 fee (or submit a Request for a Fee Waiver (Form I–912)). If you do not want a new EAD, you do not have to file Form I–765 and pay the Form I–765 fee. If you do not want to request a new EAD now, you may also file Form I–765 at a later date and pay the fee (or request a fee waiver) at that time, provided that you still have TPS or a pending TPS application.

If you have a Form I–821 and/or Form I–765 that was still pending as of November 2, 2020, then you do not need to file either application again. If USCIS approves your pending TPS application, USCIS will grant you TPS through May 2, 2022. Similarly, if USCIS approves your pending TPS-related Form I–765, it will be valid through the same date.

You may file the application for a new EAD either prior to or after your current EAD has expired. However, you are strongly encouraged to file your application for a new EAD as early as possible to avoid gaps in the validity of your employment authorization documentation and to ensure that you receive your new EAD by May 1, 2021.

For more information on the application forms and fees for TPS, please visit the USCIS TPS web page at *www.uscis.gov/tps.* Fees for the Form I–821, the Form I–765, and biometric services are also described in 8 CFR 103.7(b)(1)(i).

Biometric Services Fee

Biometrics (such as fingerprints) are required for all applicants 14 years of age and older. Those applicants must submit a biometric services fee. As previously stated, if you are unable to pay the biometric services fee, you may complete a Request for Fee Waiver (Form I–912). For more information on the application forms and fees for TPS, please visit the USCIS TPS web page at *www.uscis.gov/tps.* If necessary, you may be required to visit an Application Support Center to have your biometrics captured. For additional information on the USCIS biometrics screening process, please see the USCIS Customer Profile Management Service Privacy Impact Assessment, available at *www.dhs.gov/privacy.*

Refiling a TPS Re-Registration Application After Receiving a Denial of a Fee Waiver Request

You should file as soon as possible within the 60-day re-registration period so USCIS can process your application

and issue any EAD promptly. Properly filing early will also allow you to have time to refile your application before the deadline, should USCIS deny your fee waiver request. If, however, you receive a denial of your fee waiver request and are unable to refile by the re-registration deadline, you may still refile your Form I–821 with the biometrics fee. USCIS will review this situation to determine whether you established good cause for late TPS re-registration. However, you are urged to refile within 45 days of the date on any USCIS fee waiver denial notice, if possible. *See* INA section 244(c)(3)(C); 8 U.S.C. 1254a(c)(3)(C); 8 CFR 244.17(b). For more information on good cause for late re-registration, visit the USCIS TPS web page at *www.uscis.gov/tps.* Following denial of your fee waiver request, you may also refile your Form I–765 with fee either with your Form I–821 or at a later time, if you choose.

Note: Although a re-registering TPS beneficiary age 14 and older must pay the biometric services fee (but not the Form I–821 fee) when filing a TPS re-registration application, you may decide to wait to request an EAD. Therefore, you do not have to file the Form I–765 or pay the associated Form I–765 fee (or request a fee waiver) at the time of re-registration, and can wait to seek an EAD until after USCIS has approved your TPS re-registration application. If you choose to do this, to re-register for TPS you would only need to file the Form I–821 with the biometrics services fee, if applicable, (or request a fee waiver).

Mailing Information

Mail your application for TPS to the proper address in Table 1.

TABLE 1—MAILING ADDRESSES

If you would like to send your application by:	Then, mail your application to:
U.S. Postal Service	U.S. Citizenship and Immigration Services, Attn: TPS South Sudan, P.O. Box 6943, Chicago, IL 60680–6943.
A non-U.S. Postal Service courier	U.S. Citizenship and Immigration Services, Attn: TPS South Sudan, 131 S Dearborn Street—3rd Floor, Chicago, IL 60603–5517.

If you were granted TPS by an Immigration Judge (IJ) or the Board of Immigration Appeals (BIA) and you wish to request an EAD or are re-registering for the first time following a grant of TPS by an IJ or the BIA, please mail your application to the appropriate mailing address in Table 1. When re-registering and requesting an EAD based on an IJ/BIA grant of TPS, please include a copy of the IJ or BIA order granting you TPS with your application. This will help us to verify your grant of TPS and process your application.

Supporting Documents

The filing instructions on the Form I–821 list all the documents needed to establish eligibility for TPS. You may also find information on the acceptable documentation and other requirements for applying or registering for TPS on the USCIS website at *www.uscis.gov/tps* under ''South Sudan.''

Employment Authorization Document (EAD)

How can I obtain information on the status of my EAD request?

To get case status information about your TPS application, including the status of an EAD request, you can check Case Status Online at *www.uscis.gov,* or visit the USCIS Contact Center at *uscis.gov/contactcenter.* If your Form I–765 has been pending for more than 90 days, and you still need assistance, you may ask a question about your case online at *egov.uscis.gov/e-request/Intro.do* or call the USCIS Contact Center at 800–375–5283 (TTY 800–767–1833).

Am I eligible to receive an automatic 180-day extension of my current EAD through May 1, 2021, through this ***Federal Register*** *notice?*

Yes. Provided that you currently have a South Sudan TPS-based EAD with a marked expiration date of November 2, 2020, bearing the notation A–12 or C–19 on the face of the card under Category, this notice automatically extends your EAD through May 1, 2021. Although this **Federal Register** notice automatically extends your EAD through May 1, 2021, you must re-register timely for TPS in accordance with the procedures described in this **Federal Register** notice to maintain your TPS and employment authorization.

When hired, what documentation may I show to my employer as evidence of employment authorization and identity when completing Form I–9?

You can find the Lists of Acceptable Documents on the third page of Form I–9 as well as the Acceptable Documents web page at *www.uscis.gov/i-9-central/acceptable-documents.* Employers must complete Form I–9 to verify the identity and employment authorization of all new employees. Within 3 days of hire, employees must present acceptable documents to their employers as evidence of identity and employment authorization to satisfy Form I–9 requirements.

You may present any document from List A (which provides evidence of both identity and employment authorization), or one document from List B (which provides evidence of your identity) together with one document from List C (which provides evidence of employment authorization), or you may present an acceptable receipt as described in the Form I–9 instructions. Employers may not reject a document based on a future expiration date. You can find additional information about Form I–9 on the I–9 Central web page at *www.uscis.gov/I-9Central.*

An EAD is an acceptable document under List A. See the section ''How do my employer and I complete Form I–9 using my automatically extended Employment Authorization Document for a new job?'' of this **Federal Register** notice for further information. If your EAD has an expiration date of November 2, 2020, and states A–12 or C–19 under Category, it has been extended automatically by virtue of this **Federal Register** notice and you may choose to present your EAD to your employer as proof of identity and employment eligibility for Form I–9 through May 1, 2021, unless your TPS has been withdrawn or your request for TPS has been denied. See the subsection titled, ''How do my employer and I complete Form I–9 using my automatically extended Employment Authorization Document for a new job?'' for further information.

As an alternative to presenting evidence of your automatically extended EAD, you may choose to present any other acceptable document from List A, a combination of one selection from List B and one selection from List C, or an acceptable receipt.

What documentation may I present to my employer for Form I–9 if I am already employed but my current TPS-related EAD is set to expire?

Even though your EAD has been automatically extended, your employer is required by law to ask you about your continued employment authorization, and you will need to present your employer with evidence that you are still authorized to work. Once presented, your employer should update the EAD expiration date in Section 2 of Form I–9. *See* the section ''What corrections should my current employer make to Form I–9 if my employment authorization has been automatically extended?'' of this **Federal Register** notice for further information. You may show this **Federal Register** notice to your employer to explain what to do for Form I–9 and to show that your EAD has been automatically extended through May 1, 2021. Your employer may need to re-inspect your automatically extended EAD to check the Card Expires date and Category code if your employer did not keep a copy of your EAD when you initially presented it.

The last day of the automatic extension for your EAD is May 1, 2021. Before you start work on May 2, 2021, your employer is required by law to reverify your employment authorization in Section 3 of Form I–9. At that time, you must present any document from List A or any document from List C on Form I–9, Lists of Acceptable Documents, or an acceptable List A or List C receipt described in the Form I–9 instructions to reverify employment authorization.

If your original Form I–9 was a previous version, your employer must complete Section 3 of the current version of Form I–9 and attach it to your previously completed Form I–9. Your employer can check the I–9 Central web page at *www.uscis.gov/I-9Central* for the most current version of Form I–9.

Your employer may not specify which List A or List C document you must present and cannot reject an acceptable receipt.

Can my employer require that I provide any other documentation to prove my status, such as proof of my South Sudanese citizenship or a Form I–797C showing I re-registered for TPS?

No. When completing Form I–9, including reverifying employment authorization, employers must accept any documentation that appears on the Form I–9 Lists of Acceptable Documents that reasonably appears to be genuine and that relates to you, or an acceptable List A, List B, or List C receipt. Employers need not reverify List B identity documents. Employers may not request documentation that does not appear on the Lists of Acceptable Documents. Therefore, employers may not request proof of South Sudanese citizenship or proof of re-registration for TPS when completing Form I–9 for new hires or reverifying the employment authorization of current employees. If presented with an EAD that has been automatically extended, employers should accept such a document as a valid List A document, so long as the EAD reasonably appears to be genuine and relates to the employee. Refer to the ''Note to Employees'' section of this **Federal Register** notice for important information about your rights if your employer rejects lawful documentation, requires additional documentation, or otherwise discriminates against you based on your citizenship or immigration status, or your national origin.

How do my employer and I complete Form I–9 using my automatically extended Employment Authorization Document for a new job?

When using an automatically extended EAD to complete Form I–9 for a new job before May 2, 2021, for Section 1, you should:

a. Check ''An alien authorized to work until'' and enter May 1, 2021 as the expiration date; and

b. Enter your USCIS number or A-Number where indicated (your EAD or other document from DHS will have your USCIS number or A-Number printed on it; the USCIS number is the same as your A-Number without the A prefix).

For Section 2, your employer should:

a. Determine if the EAD is auto-extended by ensuring it is in Category A–12 or C–19 and has a Card Expires date of November 2, 2020;

b. Write in the document title;

c. Enter the issuing authority;

d. Enter either the employee's A-Number or USCIS number from Section 1 in the Document Number field on Form I–9; and

e. Write May 1, 2021, as the expiration date.

Before the start of work on May 2, 2021, employers must reverify the employee's employment authorization in Section 3 of Form I–9.

What corrections should my current employer make to Form I–9 if my Employment Authorization Document has been automatically extended?

If you presented a TPS-related EAD that was valid when you first started your job and your EAD has now been automatically extended, your employer may need to re-inspect your current EAD if the employer does not have a copy of the EAD on file. Your employer should determine if your EAD is automatically extended by ensuring that it contains Category A–12 or C–19 and has a Card Expires date of November 2, 2020. If your employer determines that your EAD has been automatically extended, your employer should update Section 2 of your previously completed Form I–9 as follows:

a. Write EAD EXT and May 1, 2021, as the last day of the automatic extension in the Additional Information field; and

b. Initial and date the correction.

Note: This is not considered a reverification. Employers do not need to complete Section 3 until either the 180-day automatic extension has ended, or the employee presents a new document to show continued employment authorization, whichever is sooner. By May 2, 2021, when the employee's automatically extended EAD has expired, employers are required by law to reverify the employee's employment authorization in Section 3. If your original Form I–9 was a previous version, your employer must complete Section 3 of the current version of Form I–9 and attach it to your previously completed Form I–9. Your employer can check the I–9 Central web page at *www.uscis.gov/I-9Central* for the most current version of Form I–9.

If I am an employer enrolled in E-Verify, how do I verify a new employee whose EAD has been automatically extended?

Employers may create a case in E-Verify for a new employee by providing the employee's A-Number or USCIS number from Form I–9 in the Document Number field in E-Verify.

If I am an employer enrolled in E-Verify, what do I do when I receive a ''Work Authorization Documents Expiration'' alert for an automatically extended EAD?

E-Verify has automated the verification process for TPS-related EADs that are automatically extended. If you have employees who provided a TPS-related EAD when they first started working for you, you will receive a ''Work Authorization Documents Expiring'' case alert when the auto-extension period for this EAD is about to expire. Before this employee starts work on May 2, 2021, you must reverify his or her employment authorization in Section 3 of Form I–9. Employers should not use E-Verify for reverification.

Note to All Employers

Employers are reminded that the laws requiring proper employment eligibility verification and prohibiting unfair immigration-related employment practices remain in full force. This **Federal Register** notice does not supersede or in any way limit applicable employment verification rules and policy guidance, including those rules setting forth reverification requirements. For general questions about the employment eligibility verification process, employers may call USCIS at 888–464–4218 (TTY 877–875–6028) or email USCIS at *I9Central@dhs.gov.* USCIS accepts calls and emails in English and many other languages. For questions about avoiding discrimination during the employment eligibility verification process (Form I–9 and E-Verify), employers may call the U.S. Department of Justice's Civil Rights Division, Immigrant and Employee Rights Section (IER) Employer Hotline at 800–255–8155 (TTY 800–237–2515). IER offers language interpretation in numerous languages. Employers may also email IER at *IER@usdoj.gov.*

Note to Employees

For general questions about the employment eligibility verification process, employees may call USCIS at 888–897–7781 (TTY 877–875–6028) or email USCIS at *I-9Central@dhs.gov.* USCIS accepts calls in English, Spanish, and many other languages. Employees or applicants may also call the IER Worker Hotline at 800–255–7688 (TTY 800–237–2515) for information regarding employment discrimination based upon citizenship, immigration status, or national origin, including discrimination related to Form I–9 and E-Verify. The IER Worker Hotline provides language interpretation in numerous languages.

To comply with the law, employers must accept any document or combination of documents from the Lists of Acceptable Documents if the documentation reasonably appears to be genuine and to relate to the employee, or an acceptable List A, List B, or List C receipt as described in the Form I–9 Instructions. Employers may not require extra or additional documentation beyond what is required for Form I–9 completion. Further, employers participating in E-Verify who receive an E-Verify case result of ''Tentative Nonconfirmation'' (TNC) must promptly inform employees of the TNC and give such employees an opportunity to contest the TNC. A TNC case result means that the information entered into E-Verify from an employee's Form I–9 differs from records available to DHS.

Employers may not terminate, suspend, delay training, withhold pay, lower pay, or take any adverse action against an employee because of the TNC while the case is still pending with E-Verify. A ''Final Nonconfirmation'' (FNC) case result is received when E-Verify cannot verify an employee's employment eligibility. An employer may terminate employment based on a case result of FNC. Work-authorized employees who receive an FNC may call USCIS for assistance at 888–897–7781 (TTY 877–875–6028). For more information about E-Verify-related discrimination or to report an employer for discrimination in the E-Verify process based on citizenship, immigration status, or national origin, contact IER's Worker Hotline at 800–255–7688 (TTY 800–237–2515). Additional information about proper nondiscriminatory Form I–9 and E-Verify procedures is available on the IER website at *www.justice.gov/ier* and on the USCIS and E-Verify websites at *www.uscis.gov/i-9-central* and *www.e-verify.gov.*

Note Regarding Federal, State, and Local Government Agencies (Such as Departments of Motor Vehicles)

For Federal purposes, TPS beneficiaries presenting an EAD referenced in this **Federal Register** Notice do not need to show any other document, such as an I–797C Notice of Action, to prove that they qualify for this extension. However, while Federal Government agencies must follow the guidelines laid out by the Federal Government, state and local government agencies establish their own rules and guidelines when granting certain benefits. Each state may have different laws, requirements, and determinations about what documents you need to provide to prove eligibility for certain benefits. Whether you are applying for a Federal, state, or local government benefit, you may need to provide the government agency with documents that show you are a TPS beneficiary, show you are authorized to work based on TPS or other status, and/or that may be used by DHS to determine whether you have TPS or other immigration status. Examples of such documents are:

- Your current EAD;
- A copy of your Form I–797C, Notice of Action, for your Form I–765 providing an automatic extension of your currently expired or expiring EAD;
- A copy of your Form I–797C, Notice of Action, for your Form I–821 for this re-registration;
- A copy of your Form I–797, the notice of approval, for a past or current Form I–821, if you received one from USCIS; and
- Any other relevant DHS-issued document that indicates your immigration status or authorization to be in the United States, or that may be used by DHS to determine whether you have such status or authorization to remain in the United States.

Check with the government agency regarding which document(s) the agency will accept. Some benefit-granting agencies use the USCIS Systematic Alien Verification for Entitlements (SAVE) program to confirm the current immigration status of applicants for public benefits. While SAVE can verify when an alien has TPS, each agency's procedures govern whether they will accept an unexpired EAD, Form I–797, or Form I–94, Arrival/Departure Record. You should:

a. Present the agency with a copy of the relevant **Federal Register** notice showing the extension of TPS-related documentation in addition to your recent TPS-related document with your A-number, USCIS number or Form I–94 number;

b. Explain that SAVE will be able to verify the continuation of your TPS using this information; and

c. Ask the agency to initiate a SAVE query with your information and follow through with additional verification steps, if necessary, to get a final SAVE response showing the validity of your TPS.

You can also ask the agency to look for SAVE notices or contact SAVE if they have any questions about your immigration status or auto-extension of TPS-related documentation. In most cases, SAVE provides an automated electronic response to benefit-granting agencies within seconds, but, occasionally, verification can be delayed. You can check the status of your SAVE verification by using CaseCheck at *save.uscis.gov/casecheck/,* then by clicking the ''Check Your Case'' button. CaseCheck is a free service that lets you follow the progress of your SAVE verification using your date of birth and one immigration identifier number (A-number, USCIS number or Form I–94 number). If an agency has denied your application based solely or in part on a SAVE response, the agency must offer you the opportunity to appeal the decision in accordance with the agency's procedures. If the agency has received and acted upon or will act upon a SAVE verification and you do not believe the SAVE response is correct, you may make an appointment for an in-person

interview at a local USCIS office. Detailed information on how to make corrections or update your immigration record, make an appointment, or submit a written request to correct records under the Freedom of Information Act can be found on the SAVE website at *www.uscis.gov/save.*

[FR Doc. 2020–24238 Filed 10–30–20; 8:45 am]

BILLING CODE 9111–97–P

DEPARTMENT OF THE INTERIOR

Bureau of Land Management

[LLAZ910000.L12100000.XP0000 19X 6100.241A]

Arizona Resource Advisory Council Meeting

AGENCY: Bureau of Land Management, Interior.

ACTION: Notice of public meeting.

SUMMARY: In accordance with the Federal Land Policy and Management Act of 1976 and the Federal Advisory Committee Act of 1972; the U.S. Department of the Interior, Bureau of Land Management (BLM) will hold a virtual public meeting of the Arizona Resource Advisory Council (RAC).

DATES: The RAC will hold a two-day virtual public meeting on November 30 and December 1, 2020. The November 30 meeting will begin at 8:30 a.m. and adjourn at approximately 2 p.m. The December 1 meeting will begin at 8:30 a.m. and adjourn at approximately 3 p.m. Each day will begin at 8:00 a.m. to allow for check-in and technical assistance with the virtual platform.

ADDRESSES: The meeting will be held virtually. The meeting link(s) will be made available at least one week before the meeting dates on the RAC's website, *https://www.blm.gov/get-involved/resource-advisory-council/near-you/arizona.* Written comments may be submitted in advance to Dolores Garcia, Public Affairs Specialist, BLM Arizona State Office, One North Central Avenue, Suite 800, Phoenix, Arizona 85004–4427; or by email to *dagarcia@blm.gov.* All comments received will be provided to the Arizona RAC.

FOR FURTHER INFORMATION CONTACT: Dolores Garcia, Public Affairs Specialist, by mail at the BLM Arizona State Office, One North Central Avenue, Suite 800, Phoenix, Arizona, 85004–4427; by telephone at 602–417–9241; or by email at *dagarcia@blm.gov.* Persons who use a telecommunications device for the deaf (TDD) may call the Federal Relay Service (FRS) at 1–800–877–8339 to contact Ms. Garcia during normal business hours. The FRS is available 24 hours a day, 7 days a week, to leave a message or question. You will receive a reply during normal business hours.

Individuals who need special assistance, such as sign language interpretation or other reasonable accommodations, should contact Dolores Garcia no later than 2 weeks before the start of the meeting.

SUPPLEMENTARY INFORMATION: The 15-member RAC advises the Secretary of the Interior, through the BLM, on a variety of planning and management issues associated with public land management in Arizona.

Agenda items will include orientation for newly appointed members; updates on BLM project work in compliance with Department of the Interior priorities and Secretary's Orders; resource management updates, including the latest initiatives; District updates; and public comment periods. The final agenda will be posted on the BLM Arizona RAC website (see **ADDRESSES**.)

The public may address the RAC on BLM-related topics during the public comment portion of the virtual meeting on November 30 and December 1, or by submitting a written statement to the contact listed in the **ADDRESSES** section prior to the meetings. Depending on the number of persons wishing to speak, and the time available, the time for individual comments may be limited.

Before including your address, phone number, email address, or other personal identifying information in your comment, you should be aware that your entire comment—including your personal identifying information—may be made publicly available at any time. While you can ask us in your comment to withhold your personal identifying information from public review, we cannot guarantee that we will be able to do so.

Authority: 43 CFR 1784.4–2.

Raymond Suazo,

Arizona State Director.

[FR Doc. 2020–24233 Filed 10–30–20; 8:45 am]

BILLING CODE 4310–12–P

DEPARTMENT OF THE INTERIOR

Bureau of Land Management

[LLAK930000.L51010000.FP0000. LVRWL14L0740]

Notice of Availability of the Record of Decision for the Proposed Willow Master Development Plan Project, Alaska

AGENCY: Bureau of Land Management, Interior

ACTION: Notice of availability.

SUMMARY: The Bureau of Land Management (BLM), Alaska State Office, announces the availability of the Record of Decision (ROD) for the Final Environmental Impact Statement (EIS) for the Willow Master Development Plan (MDP) Project. The ROD includes a deferral on a decision for drill sites 4 and 5 and associated gravel roads and pipelines, at the request of the project proponent. The ROD constitutes the final decision of the BLM on the remainder of the project and completes the required National Environmental Policy Act process for subsequent issuance of appropriate BLM rights-of-way grant, permits to drill, and other authorizations necessary for initial development of the Willow MDP Project.

ADDRESSES: Requests for information regarding the ROD may be mailed to: Willow Master Development plan EIS, Attn: Racheal Jones, 222 West 7th Avenue, #13, Anchorage, AK 99513–7504. The ROD is available on the BLM-Alaska website at *http://www.blm.gov/alaska.* Copies may be requested by calling Racheal Jones, BLM's project manager, at 907–290–0307.

FOR FURTHER INFORMATION CONTACT: Racheal Jones, BLM Alaska State Office, telephone: 907–290–0307, email: *rajones@blm.gov.* Persons who use a telecommunications device for the deaf (TDD) may call the Federal Relay Service (FRS) at 1–800–877–8339 to contact Ms. Jones during normal business hours. The FRS is available 24 hours a day, 7 days a week, to leave a message or question. You will receive a reply during normal business hours.

SUPPLEMENTARY INFORMATION: The Final EIS for the MDP Project was issued on August 13, 2020, and evaluated four alternatives, including a no-action alternative. The ROD adopts Alternative B and module delivery Option 3 as described in the Final EIS, subject to minor modifications and clarifications described in the ROD.

The ROD constitutes the final decision of the BLM and DOI except for

drill sites BT 4 and 5 and associated gravel roads and pipelines and, in accordance with the regulations at 43 CFR 4.410(a)(3), is not subject to appeal under Departmental regulations at 43 CFR part 4.

(Authority: 40 CFR 1506.6)

Chad B. Padgett,

State Director.

[FR Doc. 2020–24232 Filed 10–30–20; 8:45 am]

BILLING CODE 4310–JA–P

INTERNATIONAL TRADE COMMISSION

[Investigation Nos. 701–TA–473 and 731–TA–1173 (Second Review)]

Potassium Phosphate Salts From China; Institution of Five-Year Reviews

AGENCY: United States International Trade Commission.

ACTION: Notice.

SUMMARY: The Commission hereby gives notice that it has instituted reviews pursuant to the Tariff Act of 1930 (''the Act''), as amended, to determine whether revocation of the antidumping and countervailing duty orders on certain potassium phosphate salts from China would be likely to lead to continuation or recurrence of material injury. Pursuant to the Act, interested parties are requested to respond to this notice by submitting the information specified below to the Commission.

DATES: Instituted November 2, 2020. To be assured of consideration, the deadline for responses is December 2, 2020. Comments on the adequacy of responses may be filed with the Commission by January 14, 2021.

FOR FURTHER INFORMATION CONTACT: Mary Messer (202–205–3193), Office of Investigations, U.S. International Trade Commission, 500 E Street SW, Washington, DC 20436. Hearing-impaired persons can obtain information on this matter by contacting the Commission's TDD terminal on 202–205–1810. Persons with mobility impairments who will need special assistance in gaining access to the Commission should contact the Office of the Secretary at 202–205–2000. General information concerning the Commission may also be obtained by accessing its internet server (*https://www.usitc.gov*). The public record for this proceeding may be viewed on the Commission's electronic docket (EDIS) at *https://edis.usitc.gov.*

SUPPLEMENTARY INFORMATION:

Background.—On July 22, 2010, the Department of Commerce (''Commerce'') issued antidumping and countervailing duty orders on imports of certain potassium phosphate salts from China (75 FR 42682–42684). Following the five-year reviews by Commerce and the Commission, effective December 21, 2015, Commerce issued a continuation of the antidumping and countervailing duty orders on imports of certain potassium phosphate salts from China (80 FR 79305). The Commission is now conducting second reviews pursuant to section 751(c) of the Act, as amended (19 U.S.C. 1675(c)), to determine whether revocation of the orders would be likely to lead to continuation or recurrence of material injury to the domestic industry within a reasonably foreseeable time. Provisions concerning the conduct of this proceeding may be found in the Commission's Rules of Practice and Procedure at 19 CFR part 201, subparts A and B, and 19 CFR part 207, subparts A and F. The Commission will assess the adequacy of interested party responses to this notice of institution to determine whether to conduct full or expedited reviews. The Commission's determinations in any expedited reviews will be based on the facts available, which may include information provided in response to this notice.

Definitions.—The following definitions apply to these reviews:

(1) *Subject Merchandise* is the class or kind of merchandise that is within the scope of the five-year reviews, as defined by Commerce.

(2) The *Subject Country* in these reviews is China.

(3) The *Domestic Like Product* is the domestically produced product or products which are like, or in the absence of like, most similar in characteristics and uses with, the *Subject Merchandise.* In its original determinations and its expedited first five-year review determinations, the Commission defined anhydrous dipotassium phosphate (''DKP'') and tetrapotassium pyrophosphate (''TKPP''), each of which is within Commerce's scope definition, as separate *Domestic Like Products.*

(4) The *Domestic Industry* is the U.S. producers as a whole of the *Domestic Like Product,* or those producers whose collective output of the *Domestic Like Product* constitutes a major proportion of the total domestic production of the product. In its original determinations and its expedited first five-year review determinations, the Commission defined two *Domestic Industries* as follows: (1) All domestic producers of DKP and (2) all domestic producers of TKPP.

(5) An *Importer* is any person or firm engaged, either directly or through a parent company or subsidiary, in importing the *Subject Merchandise* into the United States from a foreign manufacturer or through its selling agent.

Participation in the proceeding and public service list.—Persons, including industrial users of the *Subject Merchandise* and, if the merchandise is sold at the retail level, representative consumer organizations, wishing to participate in the proceeding as parties must file an entry of appearance with the Secretary to the Commission, as provided in § 201.11(b)(4) of the Commission's rules, no later than 21 days after publication of this notice in the **Federal Register**. The Secretary will maintain a public service list containing the names and addresses of all persons, or their representatives, who are parties to the proceeding.

Former Commission employees who are seeking to appear in Commission five-year reviews are advised that they may appear in a review even if they participated personally and substantially in the corresponding underlying original investigation or an earlier review of the same underlying investigation. The Commission's designated agency ethics official has advised that a five-year review is not the same particular matter as the underlying original investigation, and a five-year review is not the same particular matter as an earlier review of the same underlying investigation for purposes of 18 U.S.C. 207, the post-employment statute for Federal employees, and Commission rule 201.15(b) (19 CFR 201.15(b)), 79 FR 3246 (Jan. 17, 2014), 73 FR 24609 (May 5, 2008). Consequently, former employees are not required to seek Commission approval to appear in a review under Commission rule 19 CFR 201.15, even if the corresponding underlying original investigation or an earlier review of the same underlying investigation was pending when they were Commission employees. For further ethics advice on this matter, contact Charles Smith, Office of the General Counsel, at 202–205–3408.

Limited disclosure of business proprietary information (BPI) under an administrative protective order (APO) and APO service list.—Pursuant to § 207.7(a) of the Commission's rules, the Secretary will make BPI submitted in this proceeding available to authorized applicants under the APO issued in the proceeding, provided that the application is made no later than 21 days after publication of this notice in the **Federal Register**. Authorized

applicants must represent interested parties, as defined in 19 U.S.C. 1677(9), who are parties to the proceeding. A separate service list will be maintained by the Secretary for those parties authorized to receive BPI under the APO.

Certification.—Pursuant to § 207.3 of the Commission's rules, any person submitting information to the Commission in connection with this proceeding must certify that the information is accurate and complete to the best of the submitter's knowledge. In making the certification, the submitter will acknowledge that information submitted in response to this request for information and throughout this proceeding or other proceeding may be disclosed to and used: (i) By the Commission, its employees and Offices, and contract personnel (a) for developing or maintaining the records of this or a related proceeding, or (b) in internal investigations, audits, reviews, and evaluations relating to the programs, personnel, and operations of the Commission including under 5 U.S.C. Appendix 3; or (ii) by U.S. government employees and contract personnel, solely for cybersecurity purposes. All contract personnel will sign appropriate nondisclosure agreements.

Written submissions.—Pursuant to § 207.61 of the Commission's rules, each interested party response to this notice must provide the information specified below. The deadline for filing such responses is December 2, 2020. Pursuant to § 207.62(b) of the Commission's rules, eligible parties (as specified in Commission rule 207.62(b)(1)) may also file comments concerning the adequacy of responses to the notice of institution and whether the Commission should conduct expedited or full reviews. The deadline for filing such comments is January 14, 2021. All written submissions must conform with the provisions of § 201.8 of the Commission's rules; any submissions that contain BPI must also conform with the requirements of §§ 201.6, 207.3, and 207.7 of the Commission's rules. The Commission's *Handbook on Filing Procedures,* available on the Commission's website at *https://www.usitc.gov/documents/handbook_on_filing_procedures.pdf,* elaborates upon the Commission's procedures with respect to filings. Also, in accordance with §§ 201.16(c) and 207.3 of the Commission's rules, each document filed by a party to the proceeding must be served on all other parties to the proceeding (as identified by either the public or APO service list as appropriate), and a certificate of service must accompany the document (if you are not a party to the proceeding you do not need to serve your response).

Please note the Secretary's Office will accept only electronic filings at this time. Filings must be made through the Commission's Electronic Document Information System (EDIS, *https://edis.usitc.gov*). No in-person paper-based filings or paper copies of any electronic filings will be accepted until further notice.

No response to this request for information is required if a currently valid Office of Management and Budget (''OMB'') number is not displayed; the OMB number is 3117 0016/USITC No. 20–5–476, expiration date June 30, 2023. Public reporting burden for the request is estimated to average 15 hours per response. Please send comments regarding the accuracy of this burden estimate to the Office of Investigations, U.S. International Trade Commission, 500 E Street SW, Washington, DC 20436.

Inability to provide requested information.—Pursuant to § 207.61(c) of the Commission's rules, any interested party that cannot furnish the information requested by this notice in the requested form and manner shall notify the Commission at the earliest possible time, provide a full explanation of why it cannot provide the requested information, and indicate alternative forms in which it can provide equivalent information. If an interested party does not provide this notification (or the Commission finds the explanation provided in the notification inadequate) and fails to provide a complete response to this notice, the Commission may take an adverse inference against the party pursuant to § 776(b) of the Act (19 U.S.C. 1677e(b)) in making its determinations in the reviews.

Information to be Provided in Response to this Notice of Institution: Please provide the requested information separately for each *Domestic Like Product,* as defined by the Commission in its original determinations and its expedited first five-year review determinations, and for each of the products identified by Commerce as *Subject Merchandise.* As used below, the term ''firm'' includes any related firms.

(1) The name and address of your firm or entity (including World Wide Web address) and name, telephone number, fax number, and Email address of the certifying official.

(2) A statement indicating whether your firm/entity is an interested party under 19 U.S.C. 1677(9) and if so, how, including whether your firm/entity is a U.S. producer of the *Domestic Like Product,* a U.S. union or worker group, a U.S. importer of the *Subject Merchandise*, a foreign producer or exporter of the *Subject Merchandise,* a U.S. or foreign trade or business association (a majority of whose members are interested parties under the statute), or another interested party (including an explanation). If you are a union/worker group or trade/business association, identify the firms in which your workers are employed or which are members of your association.

(3) A statement indicating whether your firm/entity is willing to participate in this proceeding by providing information requested by the Commission.

(4) A statement of the likely effects of the revocation of the antidumping and countervailing duty orders on the *Domestic Industry* in general and/or your firm/entity specifically. In your response, please discuss the various factors specified in section 752(a) of the Act (19 U.S.C. 1675a(a)) including the likely volume of subject imports, likely price effects of subject imports, and likelyi mpact of imports of *Subject Merchandise* on the *Domestic Industry.*

(5) A list of all known and currently operating U.S. producers of the *Domestic Like Product.* Identify any known related parties and the nature of the relationship as defined in section 771(4)(B) of the Act (19 U.S.C. 1677(4)(B)).

(6) A list of all known and currently operating U.S. importers of the *Subject Merchandise* and producers of the *Subject Merchandise* in the *Subject Country* that currently export or have exported *Subject Merchandise* to the United States or other countries after 2014.

(7) A list of 3–5 leading purchasers in the U.S. market for the *Domestic Like Product* and the *Subject Merchandise* (including street address, World Wide Web address, and the name, telephone number, fax number, and Email address of a responsible official at each firm).

(8) A list of known sources of information on national or regional prices for the *Domestic Like Product* or the *Subject Merchandise* in the U.S. or other markets.

(9) If you are a U.S. producer of the *Domestic Like Product,* provide the following information on your firm's operations on that product during calendar year 2019, except as noted (report quantity data in pounds and value data in U.S. dollars, f.o.b. plant). If you are a union/worker group or trade/business association, provide the information, on an aggregate basis, for the firms in which your workers are

employed/which are members of your association.

(a) Production (quantity) and, if known, an estimate of the percentage of total U.S. production of the *Domestic Like Product* accounted for by your firm's(s') production;

(b) Capacity (quantity) of your firm to produce the *Domestic Like Product* (that is, the level of production that your establishment(s) could reasonably have expected to attain during the year, assuming normal operating conditions (using equipment and machinery in place and ready to operate), normal operating levels (hours per week/weeks per year), time for downtime, maintenance, repair, and cleanup, and a typical or representative product mix);

(c) the quantity and value of U.S. commercial shipments of the *Domestic Like Product* produced in your U.S. plant(s);

(d) the quantity and value of U.S. internal consumption/company transfers of the *Domestic Like Product* produced in your U.S. plant(s); and

(e) the value of (i) net sales, (ii) cost of goods sold (COGS), (iii) gross profit, (iv) selling, general and administrative (SG&A) expenses, and (v) operating income of the *Domestic Like Product* produced in your U.S. plant(s) (include both U.S. and export commercial sales, internal consumption, and company transfers) for your most recently completed fiscal year (identify the date on which your fiscal year ends).

(10) If you are a U.S. importer or a trade/business association of U.S. importers of the *Subject Merchandise* from the *Subject Country,* provide the following information on your firm's(s') operations on that product during calendar year 2019 (report quantity data in pounds and value data in U.S. dollars). If you are a trade/business association, provide the information, on an aggregate basis, for the firms which are members of your association.

(a) The quantity and value (landed, duty-paid but not including antidumping or countervailing duties) of U.S. imports and, if known, an estimate of the percentage of total U.S. imports of *Subject Merchandise* from the *Subject Country* accounted for by your firm's(s') imports;

(b) the quantity and value (f.o.b. U.S. port, including antidumping and/or countervailing duties) of U.S. commercial shipments of *Subject Merchandise* imported from the *Subject Country;* and

(c) the quantity and value (f.o.b. U.S. port, including antidumping and/or countervailing duties) of U.S. internal consumption/company transfers of *Subject Merchandise* imported from the *Subject Country.*

(11) If you are a producer, an exporter, or a trade/business association of producers or exporters of the *Subject Merchandise* in the *Subject Country,* provide the following information on your firm's(s') operations on that product during calendar year 2019 (report quantity data in pounds and value data in U.S. dollars, landed and duty-paid at the U.S. port but not including antidumping or countervailing duties). If you are a trade/business association, provide the information, on an aggregate basis, for the firms which are members of your association.

(a) Production (quantity) and, if known, an estimate of the percentage of total production of *Subject Merchandise* in the *Subject Country* accounted for by your firm's(s') production;

(b) Capacity (quantity) of your firm(s) to produce the *Subject Merchandise* in the *Subject Country* (that is, the level of production that your establishment(s) could reasonably have expected to attain during the year, assuming normal operating conditions (using equipment and machinery in place and ready to operate), normal operating levels (hours per week/weeks per year), time for downtime, maintenance, repair, and cleanup, and a typical or representative product mix); and

(c) the quantity and value of your firm's(s') exports to the United States of *Subject Merchandise* and, if known, an estimate of the percentage of total exports to the United States of *Subject Merchandise* from the *Subject Country* accounted for by your firm's(s') exports.

(12) Identify significant changes, if any, in the supply and demand conditions or business cycle for the *Domestic Like Product* that have occurred in the United States or in the market for the *Subject Merchandise* in the *Subject Country* after 2014, and significant changes, if any, that are likely to occur within a reasonably foreseeable time. Supply conditions to consider include technology; production methods; development efforts; ability to increase production (including the shift of production facilities used for other products and the use, cost, or availability of major inputs into production); and factors related to the ability to shift supply among different national markets (including barriers to importation in foreign markets or changes in market demand abroad). Demand conditions to consider include end uses and applications; the existence and availability of substitute products; and the level of competition among the *Domestic Like Product* produced in the United States, *Subject Merchandise* produced in the *Subject Country,* and such merchandise from other countries.

(13) (Optional) A statement of whether you agree with the above definitions of the *Domestic Like Product* and *Domestic Industry;* if you disagree with either or both of these definitions, please explain why and provide alternative definitions.

Authority: This proceeding is being conducted under authority of title VII of the Tariff Act of 1930; this notice is published pursuant to § 207.61 of the Commission's rules.

By order of the Commission.
Issued: October 28, 2020.

Lisa Barton,

Secretary to the Commission.

[FR Doc. 2020–24219 Filed 10–30–20; 8:45 am]

BILLING CODE 7020–02–P

INTERNATIONAL TRADE COMMISSION

[Investigation Nos. 701–TA–525 and 731–TA–1260–1261 (Review)]

Welded Line Pipe From Korea and Turkey; Institution of Five-Year Reviews

AGENCY: United States International Trade Commission.

ACTION: Notice.

SUMMARY: The Commission hereby gives notice that it has instituted reviews pursuant to the Tariff Act of 1930 (''the Act''), as amended, to determine whether revocation of the countervailing duty order on welded line pipe from Turkey and the antidumping duty orders on welded line pipe from Korea and Turkey would be likely to lead to continuation or recurrence of material injury. Pursuant to the Act, interested parties are requested to respond to this notice by submitting the information specified below to the Commission.

DATES: Instituted November 2, 2020. To be assured of consideration, the deadline for responses is December 2, 2020. Comments on the adequacy of responses may be filed with the Commission by January 14, 2021.

FOR FURTHER INFORMATION CONTACT: Mary Messer (202–205–3193), Office of Investigations, U.S. International Trade Commission, 500 E Street SW, Washington, DC 20436. Hearing-impaired persons can obtain information on this matter by contacting the Commission's TDD terminal on 202–205–1810. Persons with mobility impairments who will need special

assistance in gaining access to the Commission should contact the Office of the Secretary at 202–205–2000. General information concerning the Commission may also be obtained by accessing its internet server (*https://www.usitc.gov*). The public record for this proceeding may be viewed on the Commission's electronic docket (EDIS) at *https://edis.usitc.gov.*

SUPPLEMENTARY INFORMATION:

Background.—On December 1, 2015, the Department of Commerce (''Commerce'') issued a countervailing duty order on imports of welded line pipe from Turkey (80 FR 75054) and antidumping duty orders on imports of welded line pipe from Korea and Turkey (80 FR 75056). The Commission is conducting reviews pursuant to section 751(c) of the Act, as amended (19 U.S.C. 1675(c)), to determine whether revocation of the orders would be likely to lead to continuation or recurrence of material injury to the domestic industry within a reasonably foreseeable time. Provisions concerning the conduct of this proceeding may be found in the Commission's Rules of Practice and Procedure at 19 CFR part 201, subparts A and B, and 19 CFR part 207, subparts A and F. The Commission will assess the adequacy of interested party responses to this notice of institution to determine whether to conduct full or expedited reviews. The Commission's determinations in any expedited reviews will be based on the facts available, which may include information provided in response to this notice.

Definitions.—The following definitions apply to these reviews:

(1) *Subject Merchandise* is the class or kind of merchandise that is within the scope of the five-year reviews, as defined by Commerce.

(2) The *Subject Countries* in these reviews are Korea and Turkey.

(3) The *Domestic Like Product* is the domestically produced product or products which are like, or in the absence of like, most similar in characteristics and uses with, the *Subject Merchandise.* In its original determinations, the Commission defined a single *Domestic Like Product* consisting of certain welded line pipe, coextensive with Commerce's scope.

(4) The *Domestic Industry* is the U.S. producers as a whole of the *Domestic Like Product,* or those producers whose collective output of the *Domestic Like Product* constitutes a major proportion of the total domestic production of the product. In its original determinations, the Commission defined the *Domestic Industry* to include all U.S. producers of certain welded line pipe.

(5) The *Order Date* is the date that the antidumping and countervailing duty orders under review became effective. In these reviews, the *Order Date* is December 1, 2015.

(6) An *Importer* is any person or firm engaged, either directly or through a parent company or subsidiary, in importing the *Subject Merchandise* into the United States from a foreign manufacturer or through its selling agent.

Participation in the proceeding and public service list.—Persons, including industrial users of the *Subject Merchandise* and, if the merchandise is sold at the retail level, representative consumer organizations, wishing to participate in the proceeding as parties must file an entry of appearance with the Secretary to the Commission, as provided in § 201.11(b)(4) of the Commission's rules, no later than 21 days after publication of this notice in the **Federal Register**. The Secretary will maintain a public service list containing the names and addresses of all persons, or their representatives, who are parties to the proceeding.

Former Commission employees who are seeking to appear in Commission five-year reviews are advised that they may appear in a review even if they participated personally and substantially in the corresponding underlying original investigation or an earlier review of the same underlying investigation. The Commission's designated agency ethics official has advised that a five-year review is not the same particular matter as the underlying original investigation, and a five-year review is not the same particular matter as an earlier review of the same underlying investigation for purposes of 18 U.S.C. 207, the post-employment statute for Federal employees, and Commission rule 201.15(b) (19 CFR 201.15(b)), 79 FR 3246 (Jan. 17, 2014), 73 FR 24609 (May 5, 2008). Consequently, former employees are not required to seek Commission approval to appear in a review under Commission rule 19 CFR 201.15, even if the corresponding underlying original investigation or an earlier review of the same underlying investigation was pending when they were Commission employees. For further ethics advice on this matter, contact Charles Smith, Office of the General Counsel, at 202–205–3408.

Limited disclosure of business proprietary information (BPI) under an administrative protective order (APO) and APO service list.—Pursuant to § 207.7(a) of the Commission's rules, the Secretary will make BPI submitted in this proceeding available to authorized applicants under the APO issued in the proceeding, provided that the application is made no later than 21 days after publication of this notice in the **Federal Register**. Authorized applicants must represent interested parties, as defined in 19 U.S.C. 1677(9), who are parties to the proceeding. A separate service list will be maintained by the Secretary for those parties authorized to receive BPI under the APO.

Certification.—Pursuant to § 207.3 of the Commission's rules, any person submitting information to the Commission in connection with this proceeding must certify that the information is accurate and complete to the best of the submitter's knowledge. In making the certification, the submitter will acknowledge that information submitted in response to this request for information and throughout this proceeding or other proceeding may be disclosed to and used: (i) By the Commission, its employees and Offices, and contract personnel (a) for developing or maintaining the records of this or a related proceeding, or (b) in internal investigations, audits, reviews, and evaluations relating to the programs, personnel, and operations of the Commission including under 5 U.S.C. Appendix 3; or (ii) by U.S. government employees and contract personnel, solely for cybersecurity purposes. All contract personnel will sign appropriate nondisclosure agreements.

Written submissions.—Pursuant to § 207.61 of the Commission's rules, each interested party response to this notice must provide the information specified below. The deadline for filing such responses is December 2, 2020. Pursuant to § 207.62(b) of the Commission's rules, eligible parties (as specified in Commission rule 207.62(b)(1)) may also file comments concerning the adequacy of responses to the notice of institution and whether the Commission should conduct expedited or full reviews. The deadline for filing such comments is January 14, 2021. All written submissions must conform with the provisions of § 201.8 of the Commission's rules; any submissions that contain BPI must also conform with the requirements of §§ 201.6, 207.3, and 207.7 of the Commission's rules. The Commission's *Handbook on Filing Procedures,* available on the Commission's website at *https://www.usitc.gov/documents/handbook_on_filing_procedures.pdf,* elaborates upon the Commission's procedures with respect to filings. Also, in accordance with §§ 201.16(c) and 207.3 of the Commission's rules, each document

filed by a party to the proceeding must be served on all other parties to the proceeding (as identified by either the public or APO service list as appropriate), and a certificate of service must accompany the document (if you are not a party to the proceeding you do not need to serve your response).

Please note the Secretary's Office will accept only electronic filings at this time. Filings must be made through the Commission's Electronic Document Information System (EDIS, *https://edis.usitc.gov*). No in-person paper-based filings or paper copies of any electronic filings will be accepted until further notice.

No response to this request for information is required if a currently valid Office of Management and Budget (''OMB'') number is not displayed; the OMB number is 3117 0016/USITC No. 20–5–477, expiration date June 30, 2023. Public reporting burden for the request is estimated to average 15 hours per response. Please send comments regarding the accuracy of this burden estimate to the Office of Investigations, U.S. International Trade Commission, 500 E Street SW, Washington, DC 20436.

Inability to provide requested information.—Pursuant to § 207.61(c) of the Commission's rules, any interested party that cannot furnish the information requested by this notice in the requested form and manner shall notify the Commission at the earliest possible time, provide a full explanation of why it cannot provide the requested information, and indicate alternative forms in which it can provide equivalent information. If an interested party does not provide this notification (or the Commission finds the explanation provided in the notification inadequate) and fails to provide a complete response to this notice, the Commission may take an adverse inference against the party pursuant to § 776(b) of the Act (19 U.S.C. 1677e(b)) in making its determinations in the reviews.

Information to be provided in response to this notice of institution: If you are a domestic producer, union/worker group, or trade/business association; import/export *Subject Merchandise* from more than one *Subject Country;* or produce *Subject Merchandise* in more than one *Subject Country,* you may file a single response. If you do so, please ensure that your response to each question includes the information requested for each pertinent *Subject Country.* As used below, the term ''firm'' includes any related firms.

(1) The name and address of your firm or entity (including World Wide Web address) and name, telephone number, fax number, and Email address of the certifying official.

(2) A statement indicating whether your firm/entity is an interested party under 19 U.S.C. 1677(9) and if so, how, including whether your firm/entity is a U.S. producer of the *Domestic Like Product,* a U.S. union or worker group, a U.S. importer of the *Subject Merchandise*, a foreign producer or exporter of the *Subject Merchandise,* a U.S. or foreign trade or business association (a majority of whose members are interested parties under the statute), or another interested party (including an explanation). If you are a union/worker group or trade/business association, identify the firms in which your workers are employed or which are members of your association.

(3) A statement indicating whether your firm/entity is willing to participate in this proceeding by providing information requested by the Commission.

(4) A statement of the likely effects of the revocation of the antidumping and countervailing duty orders on the *Domestic Industry* in general and/or your firm/entity specifically. In your response, please discuss the various factors specified in § 752(a) of the Act (19 U.S.C. 1675a(a)) including the likely volume of subject imports, likely price effects of subject imports, and likely impact of imports of *Subject Merchandise* on the *Domestic Industry.*

(5) A list of all known and currently operating U.S. producers of the *Domestic Like Product.* Identify any known related parties and the nature of the relationship as defined in § 771(4)(B) of the Act (19 U.S.C. 1677(4)(B)).

(6) A list of all known and currently operating U.S. importers of the *Subject Merchandise* and producers of the *Subject Merchandise* in each *Subject Country* that currently export or have exported *Subject Merchandise* to the United States or other countries since the *Order Date.*

(7) A list of 3–5 leading purchasers in the U.S. market for the *Domestic Like Product* and the *Subject Merchandise* (including street address, World Wide Web address, and the name, telephone number, fax number, and Email address of a responsible official at each firm).

(8) A list of known sources of information on national or regional prices for the *Domestic Like Product* or the *Subject Merchandise* in the U.S. or other markets.

(9) If you are a U.S. producer of the *Domestic Like Product,* provide the following information on your firm's operations on that product during calendar year 2019, except as noted (report quantity data in short tons and value data in U.S. dollars, f.o.b. plant). If you are a union/worker group or trade/business association, provide the information, on an aggregate basis, for the firms in which your workers are employed/which are members of your association.

(a) Production (quantity) and, if known, an estimate of the percentage of total U.S. production of the *Domestic Like Product* accounted for by your firm's(s') production;

(b) Capacity (quantity) of your firm to produce the *Domestic Like Product* (that is, the level of production that your establishment(s) could reasonably have expected to attain during the year, assuming normal operating conditions (using equipment and machinery in place and ready to operate), normal operating levels (hours per week/weeks per year), time for downtime, maintenance, repair, and cleanup, and a typical or representative product mix);

(c) the quantity and value of U.S. commercial shipments of the *Domestic Like Product* produced in your U.S. plant(s);

(d) the quantity and value of U.S. internal consumption/company transfers of the *Domestic Like Product* produced in your U.S. plant(s); and

(e) the value of (i) net sales, (ii) cost of goods sold (COGS), (iii) gross profit, (iv) selling, general and administrative (SG&A) expenses, and (v) operating income of the *Domestic Like Product* produced in your U.S. plant(s) (include both U.S. and export commercial sales, internal consumption, and company transfers) for your most recently completed fiscal year (identify the date on which your fiscal year ends).

(10) If you are a U.S. importer or a trade/business association of U.S. importers of the *Subject Merchandise* from any *Subject Country,* provide the following information on your firm's(s') operations on that product during calendar year 2019 (report quantity data in short tons and value data in U.S. dollars). If you are a trade/business association, provide the information, on an aggregate basis, for the firms which are members of your association.

(a) The quantity and value (landed, duty-paid but not including antidumping or countervailing duties) of U.S. imports and, if known, an estimate of the percentage of total U.S. imports of *Subject Merchandise* from each *Subject Country* accounted for by your firm's(s') imports;

(b) the quantity and value (f.o.b. U.S. port, including antidumping and/or countervailing duties) of U.S. commercial shipments of *Subject*

Merchandise imported from each *Subject Country;* and

(c) the quantity and value (f.o.b. U.S. port, including antidumping and/or countervailing duties) of U.S. internal consumption/company transfers of *Subject Merchandise* imported from each *Subject Country.*

(11) If you are a producer, an exporter, or a trade/business association of producers or exporters of the *Subject Merchandise* in any *Subject Country,* provide the following information on your firm's(s') operations on that product during calendar year 2019 (report quantity data in short tons and value data in U.S. dollars, landed and duty-paid at the U.S. port but not including antidumping or countervailing duties). If you are a trade/business association, provide the information, on an aggregate basis, for the firms which are members of your association.

(a) Production (quantity) and, if known, an estimate of the percentage of total production of *Subject Merchandise* in each *Subject Country* accounted for by your firm's(s') production;

(b) Capacity (quantity) of your firm(s) to produce the *Subject Merchandise* in each *Subject Country* (that is, the level of production that your establishment(s) could reasonably have expected to attain during the year, assuming normal operating conditions (using equipment and machinery in place and ready to operate), normal operating levels (hours per week/weeks per year), time for downtime, maintenance, repair, and cleanup, and a typical or representative product mix); and

(c) the quantity and value of your firm's(s') exports to the United States of *Subject Merchandise* and, if known, an estimate of the percentage of total exports to the United States of *Subject Merchandise* from each *Subject Country* accounted for by your firm's(s') exports.

(12) Identify significant changes, if any, in the supply and demand conditions or business cycle for the *Domestic Like Product* that have occurred in the United States or in the market for the *Subject Merchandise* in each *Subject Country* since the *Order Date,* and significant changes, if any, that are likely to occur within a reasonably foreseeable time. Supply conditions to consider include technology; production methods; development efforts; ability to increase production (including the shift of production facilities used for other products and the use, cost, or availability of major inputs into production); and factors related to the ability to shift supply among different national markets (including barriers to importation in foreign markets or changes in market demand abroad). Demand conditions to consider include end uses and applications; the existence and availability of substitute products; and the level of competition among the *Domestic Like Product* produced in the United States, *Subject Merchandise* produced in each *Subject Country,* and such merchandise from other countries.

(13) (Optional) A statement of whether you agree with the above definitions of the *Domestic Like Product* and *Domestic Industry;* if you disagree with either or both of these definitions, please explain why and provide alternative definitions.

Authority: This proceeding is being conducted under authority of Title VII of the Tariff Act of 1930; this notice is published pursuant to § 207.61 of the Commission's rules.

By order of the Commission.
Issued: October 28, 2020.

Lisa Barton,

Secretary to the Commission.

[FR Doc. 2020–24218 Filed 10–30–20; 8:45 am]

BILLING CODE 7020–02–P

INTERNATIONAL TRADE COMMISSION

[Investigation No. 337–TA–1142]

Notice of Commission Determination To Issue a Corrected General Exclusion Order; Certain Pocket Lighters

AGENCY: U.S. International Trade Commission.

ACTION: Notice.

SUMMARY: Notice is hereby given that the U.S. International Trade Commission has determined to issue a corrected general exclusion order (''GEO'') in the above-captioned investigation.

FOR FURTHER INFORMATION CONTACT: Houda Morad, Office of the General Counsel, U.S. International Trade Commission, 500 E Street SW, Washington, DC 20436, telephone (202) 708–4716. Copies of non-confidential documents filed in connection with this investigation may be viewed on the Commission's electronic docket (EDIS) at *https://edis.usitc.gov.* For help accessing EDIS, please email *EDIS3Help@usitc.gov.* General information concerning the Commission may also be obtained by accessing its internet server at *https://www.usitc.gov.* Hearing-impaired persons are advised that information on this matter can be obtained by contacting the Commission's TDD terminal on (202) 205–1810.

SUPPLEMENTARY INFORMATION: On February 12, 2019, the Commission instituted this investigation under section 337 of the Tariff Act of 1930, as amended, 19 U.S.C. 1337 (''section 337''), based on a complaint filed by BIC Corporation (''Complainant'') of Shelton, Connecticut. *See* 84 FR 3486–87 (Feb. 12, 2019). The complaint, as supplemented, alleges a violation of section 337 based upon the importation into the United States, the sale for importation, and the sale within the United States after importation of certain pocket lighters by reason of infringement of U.S. Trademark Registration Nos. 1,761,622 and 2,278,917. *See id.* The notice of investigation names numerous respondents, including Milan Import Export Company, LLC (''Milan'') of San Diego, California; Wellpine Company Limited of Hong Kong, China; and Zhuoye Lighter Manufacturing Co., Ltd. of Foshan City, China (collectively, ''Defaulting Respondents''). *See id.* The Office of Unfair Import Investigations is also a party to the investigation. *See id.*

The Commission previously terminated other respondents based on settlement and entry of a consent order. *See* Order No. 21 (Oct. 30, 2019), *unreviewed,* Comm'n Notice (Nov. 25, 2019). The Commission also terminated an unserved respondent based on the withdrawal of the complaint allegations as to that respondent. *See* Order No. 23 (Dec. 18, 2019), *unreviewed,* Comm'n Notice (Jan. 16, 2020).

The Commission further found each of the Defaulting Respondents in default. *See* Order No. 13 (June 6, 2019), *unreviewed,* Comm'n Notice (July 8, 2019); Order No. 14 (June 6, 2019), *unreviewed,* Comm'n Notice (July 8, 2019); Order No. 15 (June 18, 2019), *aff'd with modification,* Comm'n Notice (July 10, 2019). On February 12, 2020, the ALJ issued an ID granting Complainant's motion for summary determination of violation of section 337 by the Defaulting Respondents.

On June 22, 2020, the Commission issued a notice determining to affirm the ID and terminating the investigation. *See* 85 FR 38389–90 (June 26, 2020). The Commission also determined to issue a GEO prohibiting the unlicensed entry of certain pocket lighters that infringe Complainant's asserted trade dress and a CDO directed to defaulting respondent Milan. *See id.* The GEO, however, inadvertently omits a provision requiring Complainant to file a yearly written statement with the Commission attesting that Complainant

continues to use the asserted trade dress in commerce in the United States, that the asserted trade dress has not been abandoned, cancelled, or rendered invalid or unenforceable, and that Complainant continues to satisfy the domestic industry requirement.

The Commission has determined to issue a corrected GEO including the reporting requirement.

The Commission's vote on this determination took place on October 27, 2020.

The authority for the Commission's determination is contained in section 337 of the Tariff Act of 1930, as amended (19 U.S.C. 1337), and in part 210 of the Commission's Rules of Practice and Procedure (19 CFR part 210).

While temporary remote operating procedures are in place in response to COVID–19, the Office of the Secretary is not able to serve parties that have not retained counsel or otherwise provided a point of contact for electronic service. Accordingly, pursuant to Commission Rules 201.16(a) and 210.7(a)(1) (19 CFR 201.16(a), 210.7(a)(1)), the Commission orders that the Complainant(s) complete service for any party/parties without a method of electronic service noted on the attached Certificate of Service and shall file proof of service on the Electronic Document Information System (EDIS).

By order of the Commission.

Issued: October 27, 2020.

Lisa Barton.

Secretary to the Commission.

[FR Doc. 2020–24167 Filed 10–30–20; 8:45 am]

BILLING CODE 7020–02–P

INTERNATIONAL TRADE COMMISSION

[Investigation No. 731–TA–1046 (Third Review)]

Tetrahydrofurfuryl Alcohol From China

Determination

On the basis of the record [1] developed in the subject five-year review, the United States International Trade Commission (''Commission'') determines, pursuant to the Tariff Act of 1930 (''the Act''), that revocation of the antidumping duty order on tetrahydrofurfuryl alcohol from China would be likely to lead to continuation or recurrence of material injury to an industry in the United States within a reasonably foreseeable time.

Background

The Commission instituted this review on March 2, 2020 (85 FR 12337) and determined on June 5, 2020 that it would conduct an expedited review (85 FR 62323, October 2, 2020).

The Commission made this determination pursuant to section 751(c) of the Act (19 U.S.C. 1675(c)). It completed and filed its determination in this review on October 27, 2020. The views of the Commission are contained in USITC Publication 5129 (October 2020), entitled *Tetrahydrofurfuryl Alcohol from China: Investigation No. 731–TA–1046 (Third Review).*

By order of the Commission.

Issued: October 27, 2020.

Lisa Barton,

Secretary to the Commission.

[FR Doc. 2020–24161 Filed 10–30–20; 8:45 am]

BILLING CODE 7020–02–P

[1] The record is defined in § 207.2(f) of the Commission's Rules of Practice and Procedure (19 CFR 207.2(f)).

INTERNATIONAL TRADE COMMISSION

[Investigation No. 337–TA–1074]

Certain Industrial Automation Systems and Components Thereof Including Control Systems, Controllers, Visualization Hardware, Motion and Motor Control Systems, Networking Equipment, Safety Devices, and Power Supplies; Notice of Commission Determination To Issue a Corrected General Exclusion Order

AGENCY: U.S. International Trade Commission.

ACTION: Notice.

SUMMARY: Notice is hereby given that the U.S. International Trade Commission has determined to issue a corrected general exclusion order (''GEO'') in the above-captioned investigation.

FOR FURTHER INFORMATION CONTACT: Houda Morad, Office of the General Counsel, U.S. International Trade Commission, 500 E Street SW, Washington, DC 20436, telephone (202) 708–4716. Copies of non-confidential documents filed in connection with this investigation may be viewed on the Commission's electronic docket (EDIS) at *https://edis.usitc.gov.* For help accessing EDIS, please email *EDIS3Help@usitc.gov.* General information concerning the Commission may also be obtained by accessing its internet server at *https://www.usitc.gov.* Hearing-impaired persons are advised that information on this matter can be obtained by contacting the Commission's TDD terminal on (202) 205–1810.

SUPPLEMENTARY INFORMATION: The Commission instituted this investigation on October 16, 2017, under section 337 of the Tariff Act of 1930, as amended, 19 U.S.C. 1337 (''section 337''), based on a complaint filed by Rockwell Automation, Inc. (''Complainant'') of Milwaukee, Wisconsin. *See* 82 FR 48113–15 (Oct. 16, 2017). The complaint, as supplemented, alleged violations of section 337 based on the infringement of certain registered trademarks and copyrights and on unfair methods of competition and unfair acts in the importation or sale of certain industrial automation systems and components thereof including control systems, controllers, visualization hardware, motion and motor control systems, networking equipment, safety devices, and power supplies, the threat or effect of which is to destroy or substantially injure an industry in the United States. *See id.* The notice of investigation identified the following respondents: Can Electric Limited of Guangzhou, China (''Can Electric''); Capnil (HK) Company Limited of Hong Kong (''Capnil''); Fractioni (Hongkong) Ltd. of Shanghai, China (''Fractioni''); Fujian Dahong Trade Co. of Fujian, China (''Dahong''); GreySolution Limited d/b/a Fibica of Hong Kong (''GreySolution''); Huang Wei Feng d/b/a A–O–M Industry of Shenzhen, China (''Huang''); KBS Electronics Suzhou Co, Ltd. of Shanghai, China (''KBS''); PLC–VIP Shop d/b/a VIP Tech Limited of Hong Kong (''PLC–VIP''); Radwell International, Inc. d/b/a PLC Center of Willingboro, New Jersey (''Radwell''); Shanghai EuoSource Electronic Co., Ltd of Shanghai, China (''EuoSource''); ShenZhen T-Tide Trading co., Ltd. of Shenzhen, China (''T-Tide''); SoBuy Commercial (HK) Co. Limited of Hong Kong (''SoBuy''); Suzhou Yi Micro Optical Co., Ltd., d/b/a Suzhou Yiwei Guangxue Youxiangongsi, d/b/a Easy Microoptics Co. LTD. of Jiangsu, China (''Suzhou''); Wenzhou Sparker Group Co. Ltd., d/b/a Sparker Instruments of Wenzhou, China (''Sparker''); and Yaspro Electronics (Shanghai) Co., Ltd. of Shanghai, China (''Yaspro''). *See id.* In addition, the Office of Unfair Import Investigations was also a party in this investigation. *See id.*

Nine respondents were found in default, namely, Fractioni, GreySolution, KBS, EuoSource, T-Tide, SoBuy, Suzhou, Yaspro and Can Electric (collectively, ''the Defaulted Respondents''). Furthermore, five

unserved respondents (Capnil, Dahong, Huang, PLC–VIP, and Sparker) were terminated from the investigation, and one respondent (Radwell) was terminated based on the entry of a consent order.

On October 23, 2018, the Administrative Law Judge (''ALJ'') issued a final initial determination (''FID'') finding a violation of section 337 by the Defaulted Respondents and recommending that the Commission: (1) Issue a general exclusion order (''GEO''); and (2) issue a cease and desist order (''CDO'') against Defaulted Respondent Fractioni. The ALJ determined that the Defaulted Respondents infringed Complainant's asserted trademarks, but that Complainant failed to establish its two other claims, namely, the infringement of Complainant's asserted copyrights and tortious interference with Complainant's contracts.

On December 20, 2018, the Commission issued a notice determining not to review the FID. *See* 83 FR 67346–48 (Dec. 28, 2018). On April 8, 2019, the Commission issued a notice determining that the appropriate remedy is a GEO prohibiting the unlicensed entry of certain industrial automation systems and components thereof including control systems, controllers, visualization hardware, motion and motor control systems, networking equipment, safety devices, and power supplies that infringe Complainant's asserted trademarks, and a CDO directed to defaulted respondent Fractioni. *See* 84 FR 14971–72 (Apr. 12, 2019). The GEO, however, inadvertently omits a provision requiring Complainant to file a yearly written statement with the Commission attesting that Complainant continues to use the asserted trademarks in commerce in the United States, that the asserted trademarks have not been abandoned, cancelled, or rendered invalid or unenforceable, and that Complainant continues to satisfy the domestic industry requirement.

The Commission has determined to issue a corrected GEO including the reporting requirement.

The Commission's vote on this determination took place on October 27, 2020.

The authority for the Commission's determination is contained in section 337 of the Tariff Act of 1930, as amended (19 U.S.C. 1337), and in part 210 of the Commission's Rules of Practice and Procedure (19 CFR part 210).

While temporary remote operating procedures are in place in response to COVID–19, the Office of the Secretary is not able to serve parties that have not retained counsel or otherwise provided a point of contact for electronic service. Accordingly, pursuant to Commission Rules 201.16(a) and 210.7(a)(1) (19 CFR 201.16(a), 210.7(a)(1)), the Commission orders that the Complainant(s) complete service for any party/parties without a method of electronic service noted on the attached Certificate of Service and shall file proof of service on the Electronic Document Information System (EDIS).

By order of the Commission.

Issued: October 27, 2020.

Lisa Barton,

Secretary to the Commission.

[FR Doc. 2020–24166 Filed 10–30–20; 8:45 am]

BILLING CODE 7020–02–P

INTERNATIONAL TRADE COMMISSION

[Investigation Nos. 701–TA–526 and 731–TA–1262 (Review)]

Melamine From China; Institution of Five-Year Reviews

AGENCY: United States International Trade Commission.

ACTION: Notice.

SUMMARY: The Commission hereby gives notice that it has instituted reviews pursuant to the Tariff Act of 1930 (''the Act''), as amended, to determine whether revocation of the antidumping and countervailing duty orders on melamine from China would be likely to lead to continuation or recurrence of material injury. Pursuant to the Act, interested parties are requested to respond to this notice by submitting the information specified below to the Commission.

DATES: Instituted November 2, 2020. To be assured of consideration, the deadline for responses is December 2, 2020. Comments on the adequacy of responses may be filed with the Commission by January 14, 2021.

FOR FURTHER INFORMATION CONTACT: Mary Messer (202–205–3193), Office of Investigations, U.S. International Trade Commission, 500 E Street SW, Washington, DC 20436. Hearing-impaired persons can obtain information on this matter by contacting the Commission's TDD terminal on 202–205–1810. Persons with mobility impairments who will need special assistance in gaining access to the Commission should contact the Office of the Secretary at 202–205–2000. General information concerning the Commission may also be obtained by accessing its internet server (*https://www.usitc.gov*). The public record for this proceeding may be viewed on the Commission's electronic docket (EDIS) at *https://edis.usitc.gov.*

SUPPLEMENTARY INFORMATION:

Background.—On December 28, 2015, the Department of Commerce (''Commerce'') issued antidumping and countervailing duty orders on imports of melamine from China (80 FR 80751). The Commission is conducting reviews pursuant to section 751(c) of the Act, as amended (19 U.S.C. 1675(c)), to determine whether revocation of the orders would be likely to lead to continuation or recurrence of material injury to the domestic industry within a reasonably foreseeable time. Provisions concerning the conduct of this proceeding may be found in the Commission's Rules of Practice and Procedure at 19 CFR part 201, subparts A and B, and 19 CFR part 207, subparts A and F. The Commission will assess the adequacy of interested party responses to this notice of institution to determine whether to conduct full or expedited reviews. The Commission's determinations in any expedited reviews will be based on the facts available, which may include information provided in response to this notice.

Definitions.—The following definitions apply to these reviews:

(1) *Subject Merchandise* is the class or kind of merchandise that is within the scope of the five-year reviews, as defined by Commerce.

(2) The *Subject Country* in these reviews is China.

(3) The *Domestic Like Product* is the domestically produced product or products which are like, or in the absence of like, most similar in characteristics and uses with, the *Subject Merchandise.* In its original determinations, the Commission found a single *Domestic Like Product* consisting of melamine, coextensive with Commerce's scope definition.

(4) The *Domestic Industry* is the U.S. producers as a whole of the *Domestic Like Product,* or those producers whose collective output of the *Domestic Like Product* constitutes a major proportion of the total domestic production of the product. In its original determinations, the Commission defined the *Domestic Industry* as all U.S. producers of the melamine products described by Commerce's scope.

(5) The *Order Date* is the date that the antidumping and countervailing duty orders under review became effective. In these reviews, the *Order Date* is December 28, 2015.

(6) An *Importer* is any person or firm engaged, either directly or through a

parent company or subsidiary, in importing the *Subject Merchandise* into the United States from a foreign manufacturer or through its selling agent.

Participation in the proceeding and public service list.—Persons, including industrial users of the *Subject Merchandise* and, if the merchandise is sold at the retail level, representative consumer organizations, wishing to participate in the proceeding as parties must file an entry of appearance with the Secretary to the Commission, as provided in § 201.11(b)(4) of the Commission's rules, no later than 21 days after publication of this notice in the **Federal Register**. The Secretary will maintain a public service list containing the names and addresses of all persons, or their representatives, who are parties to the proceeding.

Former Commission employees who are seeking to appear in Commission five-year reviews are advised that they may appear in a review even if they participated personally and substantially in the corresponding underlying original investigation or an earlier review of the same underlying investigation. The Commission's designated agency ethics official has advised that a five-year review is not the same particular matter as the underlying original investigation, and a five-year review is not the same particular matter as an earlier review of the same underlying investigation for purposes of 18 U.S.C. 207, the post-employment statute for Federal employees, and Commission rule 201.15(b) (19 CFR 201.15(b)), 79 FR 3246 (Jan. 17, 2014), 73 FR 24609 (May 5, 2008). Consequently, former employees are not required to seek Commission approval to appear in a review under Commission rule 19 CFR 201.15, even if the corresponding underlying original investigation or an earlier review of the same underlying investigation was pending when they were Commission employees. For further ethics advice on this matter, contact Charles Smith, Office of the General Counsel, at 202–205–3408.

Limited disclosure of business proprietary information (BPI) under an administrative protective order (APO) and APO service list.—Pursuant to § 207.7(a) of the Commission's rules, the Secretary will make BPI submitted in this proceeding available to authorized applicants under the APO issued in the proceeding, provided that the application is made no later than 21 days after publication of this notice in the **Federal Register**. Authorized applicants must represent interested parties, as defined in 19 U.S.C. 1677(9), who are parties to the proceeding. A separate service list will be maintained by the Secretary for those parties authorized to receive BPI under the APO.

Certification.—Pursuant to § 207.3 of the Commission's rules, any person submitting information to the Commission in connection with this proceeding must certify that the information is accurate and complete to the best of the submitter's knowledge. In making the certification, the submitter will acknowledge that information submitted in response to this request for information and throughout this proceeding or other proceeding may be disclosed to and used: (i) By the Commission, its employees and Offices, and contract personnel (a) for developing or maintaining the records of this or a related proceeding, or (b) in internal investigations, audits, reviews, and evaluations relating to the programs, personnel, and operations of the Commission including under 5 U.S.C. Appendix 3; or (ii) by U.S. government employees and contract personnel, solely for cybersecurity purposes. All contract personnel will sign appropriate nondisclosure agreements.

Written submissions.—Pursuant to § 207.61 of the Commission's rules, each interested party response to this notice must provide the information specified below. The deadline for filing such responses is December 2, 2020. Pursuant to § 207.62(b) of the Commission's rules, eligible parties (as specified in Commission rule 207.62(b)(1)) may also file comments concerning the adequacy of responses to the notice of institution and whether the Commission should conduct expedited or full reviews. The deadline for filing such comments is January 14, 2021. All written submissions must conform with the provisions of § 201.8 of the Commission's rules; any submissions that contain BPI must also conform with the requirements of §§ 201.6, 207.3, and 207.7 of the Commission's rules. The Commission's *Handbook on Filing Procedures,* available on the Commission's website at *https://www.usitc.gov/documents/handbook_on_filing_procedures.pdf,* elaborates upon the Commission's procedures with respect to filings. Also, in accordance with §§ 201.16(c) and 207.3 of the Commission's rules, each document filed by a party to the proceeding must be served on all other parties to the proceeding (as identified by either the public or APO service list as appropriate), and a certificate of service must accompany the document (if you are not a party to the proceeding you do not need to serve your response).

Please note the Secretary's Office will accept only electronic filings at this time. Filings must be made through the Commission's Electronic Document Information System (EDIS, *https://edis.usitc.gov*). No in-person paper-based filings or paper copies of any electronic filings will be accepted until further notice.

No response to this request for information is required if a currently valid Office of Management and Budget (''OMB'') number is not displayed; the OMB number is 3117 0016/USITC No. 20–5–475, expiration date June 30, 2023. Public reporting burden for the request is estimated to average 15 hours per response. Please send comments regarding the accuracy of this burden estimate to the Office of Investigations, U.S. International Trade Commission, 500 E Street SW, Washington, DC 20436.

Inability to provide requested information.—Pursuant to § 207.61(c) of the Commission's rules, any interested party that cannot furnish the information requested by this notice in the requested form and manner shall notify the Commission at the earliest possible time, provide a full explanation of why it cannot provide the requested information, and indicate alternative forms in which it can provide equivalent information. If an interested party does not provide this notification (or the Commission finds the explanation provided in the notification inadequate) and fails to provide a complete response to this notice, the Commission may take an adverse inference against the party pursuant to § 776(b) of the Act (19 U.S.C. 1677e(b)) in making its determinations in the reviews.

Information to be Provided in Response to this Notice of Institution: As used below, the term ''firm'' includes any related firms.

(1) The name and address of your firm or entity (including World Wide Web address) and name, telephone number, fax number, and Email address of the certifying official.

(2) A statement indicating whether your firm/entity is an interested party under 19 U.S.C. 1677(9) and if so, how, including whether your firm/entity is a U.S. producer of the *Domestic Like Product,* a U.S. union or worker group, a U.S. importer of the *Subject Merchandise*, a foreign producer or exporter of the *Subject Merchandise,* a U.S. or foreign trade or business association (a majority of whose members are interested parties under the statute), or another interested party

(including an explanation). If you are a union/worker group or trade/business association, identify the firms in which your workers are employed or which are members of your association.

(3) A statement indicating whether your firm/entity is willing to participate in this proceeding by providing information requested by the Commission.

(4) A statement of the likely effects of the revocation of the antidumping and countervailing duty orders on the *Domestic Industry* in general and/or your firm/entity specifically. In your response, please discuss the various factors specified in § 752(a) of the Act (19 U.S.C. 1675a(a)) including the likely volume of subject imports, likely price effects of subject imports, and likely impact of imports of *Subject Merchandise* on the *Domestic Industry.*

(5) A list of all known and currently operating U.S. producers of the *Domestic Like Product.* Identify any known related parties and the nature of the relationship as defined in § 771(4)(B) of the Act (19 U.S.C. 1677(4)(B)).

(6) A list of all known and currently operating U.S. importers of the *Subject Merchandise* and producers of the *Subject Merchandise* in the *Subject Country* that currently export or have exported *Subject Merchandise* to the United States or other countries since the *Order Date.*

(7) A list of 3–5 leading purchasers in the U.S. market for the *Domestic Like Product* and the *Subject Merchandise* (including street address, World Wide Web address, and the name, telephone number, fax number, and Email address of a responsible official at each firm).

(8) A list of known sources of information on national or regional prices for the *Domestic Like Product* or the *Subject Merchandise* in the U.S. or other markets.

(9) If you are a U.S. producer of the *Domestic Like Product,* provide the following information on your firm's operations on that product during calendar year 2019, except as noted (report quantity data in pounds and value data in U.S. dollars, f.o.b. plant). If you are a union/worker group or trade/business association, provide the information, on an aggregate basis, for the firms in which your workers are employed/which are members of your association.

(a) Production (quantity) and, if known, an estimate of the percentage of total U.S. production of the *Domestic Like Product* accounted for by your firm's(s') production;

(b) Capacity (quantity) of your firm to produce the *Domestic Like Product* (that is, the level of production that your establishment(s) could reasonably have expected to attain during the year, assuming normal operating conditions (using equipment and machinery in place and ready to operate), normal operating levels (hours per week/weeks per year), time for downtime, maintenance, repair, and cleanup, and a typical or representative product mix);

(c) the quantity and value of U.S. commercial shipments of the *Domestic Like Product* produced in your U.S. plant(s);

(d) the quantity and value of U.S. internal consumption/company transfers of the *Domestic Like Product* produced in your U.S. plant(s); and

(e) the value of (i) net sales, (ii) cost of goods sold (COGS), (iii) gross profit, (iv) selling, general and administrative (SG&A) expenses, and (v) operating income of the *Domestic Like Product* produced in your U.S. plant(s) (include both U.S. and export commercial sales, internal consumption, and company transfers) for your most recently completed fiscal year (identify the date on which your fiscal year ends).

(10) If you are a U.S. importer or a trade/business association of U.S. importers of the *Subject Merchandise* from the *Subject Country,* provide the following information on your firm's(s') operations on that product during calendar year 2019 (report quantity data in pounds and value data in U.S. dollars). If you are a trade/business association, provide the information, on an aggregate basis, for the firms which are members of your association.

(a) The quantity and value (landed, duty-paid but not including antidumping or countervailing duties) of U.S. imports and, if known, an estimate of the percentage of total U.S. imports of *Subject Merchandise* from the *Subject Country* accounted for by your firm's(s') imports;

(b) the quantity and value (f.o.b. U.S. port, including antidumping and/or countervailing duties) of U.S. commercial shipments of *Subject Merchandise* imported from the *Subject Country;* and

(c) the quantity and value (f.o.b. U.S. port, including antidumping and/or countervailing duties) of U.S. internal consumption/company transfers of *Subject Merchandise* imported from the *Subject Country.*

(11) If you are a producer, an exporter, or a trade/business association of producers or exporters of the *Subject Merchandise* in the *Subject Country,* provide the following information on your firm's(s') operations on that product during calendar year 2019 (report quantity data in pounds and value data in U.S. dollars, landed and duty-paid at the U.S. port but not including antidumping or countervailing duties). If you are a trade/business association, provide the information, on an aggregate basis, for the firms which are members of your association.

(a) Production (quantity) and, if known, an estimate of the percentage of total production of *Subject Merchandise* in the *Subject Country* accounted for by your firm's(s') production;

(b) Capacity (quantity) of your firm(s) to produce the *Subject Merchandise* in the *Subject Country* (that is, the level of production that your establishment(s) could reasonably have expected to attain during the year, assuming normal operating conditions (using equipment and machinery in place and ready to operate), normal operating levels (hours per week/weeks per year), time for downtime, maintenance, repair, and cleanup, and a typical or representative product mix); and

(c) the quantity and value of your firm's(s') exports to the United States of *Subject Merchandise* and, if known, an estimate of the percentage of total exports to the United States of *Subject Merchandise* from the *Subject Country* accounted for by your firm's(s') exports.

(12) Identify significant changes, if any, in the supply and demand conditions or business cycle for the *Domestic Like Product* that have occurred in the United States or in the market for the *Subject Merchandise* in the *Subject Country* since the *Order Date,* and significant changes, if any, that are likely to occur within a reasonably foreseeable time. Supply conditions to consider include technology; production methods; development efforts; ability to increase production (including the shift of production facilities used for other products and the use, cost, or availability of major inputs into production); and factors related to the ability to shift supply among different national markets (including barriers to importation in foreign markets or changes in market demand abroad). Demand conditions to consider include end uses and applications; the existence and availability of substitute products; and the level of competition among the *Domestic Like Product* produced in the United States, *Subject Merchandise* produced in the *Subject Country,* and such merchandise from other countries.

(13) (Optional) A statement of whether you agree with the above definitions of the *Domestic Like Product* and *Domestic Industry;* if you disagree with either or both of these definitions,

please explain why and provide alternative definitions.

Authority: This proceeding is being conducted under authority of Title VII of the Tariff Act of 1930; this notice is published pursuant to § 207.61 of the Commission's rules.

By order of the Commission.

Issued: October 28, 2020.

Lisa Barton,

Secretary to the Commission.

[FR Doc. 2020–24217 Filed 10–30–20; 8:45 am]

BILLING CODE 7020–02–P

INTERNATIONAL TRADE COMMISSION

[Investigation Nos. 731–TA–753, 754, and 756 (Fourth Review)]

Cut-to-Length Carbon Steel Plate From China, Russia, and Ukraine; Institution of Five-Year Reviews

AGENCY: United States International Trade Commission.

ACTION: Notice.

SUMMARY: The Commission hereby gives notice that it has instituted reviews pursuant to the Tariff Act of 1930 (''the Act''), as amended, to determine whether revocation of the antidumping duty order on cut-to-length carbon steel plate from China and the termination of the suspended investigations on cut-to-length carbon steel plate from Russia and Ukraine would be likely to lead to continuation or recurrence of material injury. Pursuant to the Act, interested parties are requested to respond to this notice by submitting the information specified below to the Commission.

DATES: Instituted November 2, 2020. To be assured of consideration, the deadline for responses is December 2, 2020. Comments on the adequacy of responses may be filed with the Commission by January 14, 2021.

FOR FURTHER INFORMATION CONTACT: Mary Messer (202–205–3193), Office of Investigations, U.S. International Trade Commission, 500 E Street SW, Washington, DC 20436. Hearing-impaired persons can obtain information on this matter by contacting the Commission's TDD terminal on 202–205–1810. Persons with mobility impairments who will need special assistance in gaining access to the Commission should contact the Office of the Secretary at 202–205–2000. General information concerning the Commission may also be obtained by accessing its internet server (*https://www.usitc.gov*). The public record for this proceeding may be viewed on the Commission's electronic docket (EDIS) at *https://edis.usitc.gov.*

SUPPLEMENTARY INFORMATION:

Background.—On October 24, 1997, the Department of Commerce (''Commerce'') suspended antidumping duty investigations on imports of cut-to-length carbon steel plate from China, Russia, and Ukraine (62 FR 61766, 61773, and 61780, November 19, 1997). Following the first five-year reviews by Commerce and the Commission, effective September 17, 2003, Commerce issued a continuation of the suspended investigations on imports of cut-to-length carbon steel plate from China, Russia, and Ukraine (68 FR 54417). The suspension agreement concerning cut-to-length carbon steel plate from China was subsequently terminated and an antidumping duty order was imposed effective November 3, 2003 (68 FR 60081). Commerce issued a continuation of the antidumping duty order on imports of cut-to-length carbon steel plate from China and of the suspended investigations on imports of cut-to-length carbon steel plate from Russia and Ukraine following the second five-year reviews (74 FR 57994, November 10, 2009) and third five-year reviews (80 FR 79306, December 21, 2015). The Commission is now conducting the fourth five-year reviews pursuant to section 751(c) of the Act, as amended (19 U.S.C. 1675(c)), to determine whether revocation of the order concerning China and termination of the suspended investigations concerning Russia and Ukraine would be likely to lead to continuation or recurrence of material injury to the domestic industry within a reasonably foreseeable time. Provisions concerning the conduct of this proceeding may be found in the Commission's Rules of Practice and Procedure at 19 CFR part 201, subparts A and B, and 19 CFR part 207, subparts A and F. The Commission will assess the adequacy of interested party responses to this notice of institution to determine whether to conduct full or expedited reviews. The Commission's determinations in any expedited reviews will be based on the facts available, which may include information provided in response to this notice.

Definitions.—The following definitions apply to these reviews:

(1) *Subject Merchandise* is the class or kind of merchandise that is within the scope of the five-year reviews, as defined by Commerce.

(2) The *Subject Countries* in these reviews are China, Russia, and Ukraine.

(3) The *Domestic Like Product* is the domestically produced product or products which are like, or in the absence of like, most similar in characteristics and uses with, the *Subject Merchandise.* In its original determinations, the Commission defined the *Domestic Like Product* as cut-to-length plate, co-extensive with Commerce's scope, produced by U.S. mills or cut from coiled plate by service centers. In its full first, second, and third five-year review determinations, the Commission defined the *Domestic Like Product* as cut-to-length plate, including cut-to-length plate made from micro-alloy steel. One Commissioner defined the *Domestic Like Product* differently in the first five-year reviews.

(4) The *Domestic Industry* is the U.S. producers as a whole of the *Domestic Like Product,* or those producers whose collective output of the *Domestic Like Product* constitutes a major proportion of the total domestic production of the product. In its original determinations and its full first, second, and third five-year review determinations, the Commission defined the *Domestic Industry* to include all producers of the *Domestic Like Product,* whether toll producers, integrated producers, or processors. One Commissioner defined the *Domestic Industry* differently in the first five-year reviews.

(5) An *Importer* is any person or firm engaged, either directly or through a parent company or subsidiary, in importing the *Subject Merchandise* into the United States from a foreign manufacturer or through its selling agent.

Participation in the proceeding and public service list.—Persons, including industrial users of the *Subject Merchandise* and, if the merchandise is sold at the retail level, representative consumer organizations, wishing to participate in the proceeding as parties must file an entry of appearance with the Secretary to the Commission, as provided in § 201.11(b)(4) of the Commission's rules, no later than 21 days after publication of this notice in the **Federal Register**. The Secretary will maintain a public service list containing the names and addresses of all persons, or their representatives, who are parties to the proceeding.

Former Commission employees who are seeking to appear in Commission five-year reviews are advised that they may appear in a review even if they participated personally and substantially in the corresponding underlying original investigation or an earlier review of the same underlying investigation. The Commission's designated agency ethics official has advised that a five-year review is not the same particular matter as the underlying

original investigation, and a five-year review is not the same particular matter as an earlier review of the same underlying investigation for purposes of 18 U.S.C. 207, the post-employment statute for Federal employees, and Commission rule 201.15(b) (19 CFR 201.15(b)), 79 FR 3246 (Jan. 17, 2014), 73 FR 24609 (May 5, 2008). Consequently, former employees are not required to seek Commission approval to appear in a review under Commission rule 19 CFR 201.15, even if the corresponding underlying original investigation or an earlier review of the same underlying investigation was pending when they were Commission employees. For further ethics advice on this matter, contact Charles Smith, Office of the General Counsel, at 202–205–3408.

Limited disclosure of business proprietary information (BPI) under an administrative protective order (APO) and APO service list.—Pursuant to § 207.7(a) of the Commission's rules, the Secretary will make BPI submitted in this proceeding available to authorized applicants under the APO issued in the proceeding, provided that the application is made no later than 21 days after publication of this notice in the **Federal Register**. Authorized applicants must represent interested parties, as defined in 19 U.S.C. 1677(9), who are parties to the proceeding. A separate service list will be maintained by the Secretary for those parties authorized to receive BPI under the APO.

Certification.—Pursuant to § 207.3 of the Commission's rules, any person submitting information to the Commission in connection with this proceeding must certify that the information is accurate and complete to the best of the submitter's knowledge. In making the certification, the submitter will acknowledge that information submitted in response to this request for information and throughout this proceeding or other proceeding may be disclosed to and used: (i) By the Commission, its employees and Offices, and contract personnel (a) for developing or maintaining the records of this or a related proceeding, or (b) in internal investigations, audits, reviews, and evaluations relating to the programs, personnel, and operations of the Commission including under 5 U.S.C. Appendix 3; or (ii) by U.S. government employees and contract personnel, solely for cybersecurity purposes. All contract personnel will sign appropriate nondisclosure agreements.

Written submissions.—Pursuant to § 207.61 of the Commission's rules, each interested party response to this notice must provide the information specified below. The deadline for filing such responses is December 2, 2020. Pursuant to § 207.62(b) of the Commission's rules, eligible parties (as specified in Commission rule 207.62(b)(1)) may also file comments concerning the adequacy of responses to the notice of institution and whether the Commission should conduct expedited or full reviews. The deadline for filing such comments is January 14, 2021. All written submissions must conform with the provisions of § 201.8 of the Commission's rules; any submissions that contain BPI must also conform with the requirements of §§ 201.6, 207.3, and 207.7 of the Commission's rules. The Commission's *Handbook on Filing Procedures,* available on the Commission's website at *https://www.usitc.gov/documents/handbook_on_filing_procedures.pdf,* elaborates upon the Commission's procedures with respect to filings. Also, in accordance with §§ 201.16(c) and 207.3 of the Commission's rules, each document filed by a party to the proceeding must be served on all other parties to the proceeding (as identified by either the public or APO service list as appropriate), and a certificate of service must accompany the document (if you are not a party to the proceeding you do not need to serve your response).

Please note the Secretary's Office will accept only electronic filings at this time. Filings must be made through the Commission's Electronic Document Information System (EDIS, *https://edis.usitc.gov*). No in-person paper-based filings or paper copies of any electronic filings will be accepted until further notice.

No response to this request for information is required if a currently valid Office of Management and Budget (''OMB'') number is not displayed; the OMB number is 3117 0016/USITC No. 20–5–474, expiration date June 30, 2023. Public reporting burden for the request is estimated to average 15 hours per response. Please send comments regarding the accuracy of this burden estimate to the Office of Investigations, U.S. International Trade Commission, 500 E Street SW, Washington, DC 20436.

Inability to provide requested information.—Pursuant to § 207.61(c) of the Commission's rules, any interested party that cannot furnish the information requested by this notice in the requested form and manner shall notify the Commission at the earliest possible time, provide a full explanation of why it cannot provide the requested information, and indicate alternative forms in which it can provide equivalent information. If an interested party does not provide this notification (or the Commission finds the explanation provided in the notification inadequate) and fails to provide a complete response to this notice, the Commission may take an adverse inference against the party pursuant to § 776(b) of the Act (19 U.S.C. 1677e(b)) in making its determinations in the reviews.

Information To Be Provided in Response to This Notice of Institution: If you are a domestic producer, union/worker group, or trade/business association; import/export *Subject Merchandise* from more than one *Subject Country;* or produce *Subject Merchandise* in more than one *Subject Country,* you may file a single response. If you do so, please ensure that your response to each question includes the information requested for each pertinent *Subject Country.* As used below, the term ''firm'' includes any related firms.

(1) The name and address of your firm or entity (including World Wide Web address) and name, telephone number, fax number, and Email address of the certifying official.

(2) A statement indicating whether your firm/entity is an interested party under 19 U.S.C. 1677(9) and if so, how, including whether your firm/entity is a U.S. producer of the *Domestic Like Product,* a U.S. union or worker group, a U.S. importer of the *Subject Merchandise*, a foreign producer or exporter of the *Subject Merchandise,* a U.S. or foreign trade or business association (a majority of whose members are interested parties under the statute), or another interested party (including an explanation). If you are a union/worker group or trade/business association, identify the firms in which your workers are employed or which are members of your association.

(3) A statement indicating whether your firm/entity is willing to participate in this proceeding by providing information requested by the Commission.

(4) A statement of the likely effects of the revocation of the antidumping duty order concerning China and the termination of the suspended investigations concerning Russia and Ukraine on the *Domestic Industry* in general and/or your firm/entity specifically. In your response, please discuss the various factors specified in section 752(a) of the Act (19 U.S.C. 1675a(a)) including the likely volume of subject imports, likely price effects of subject imports, and likely impact of imports of *Subject Merchandise* on the *Domestic Industry.*

(5) A list of all known and currently operating U.S. producers of the *Domestic Like Product.* Identify any known related parties and the nature of the relationship as defined in § 771(4)(B) of the Act (19 U.S.C. 1677(4)(B)).

(6) A list of all known and currently operating U.S. importers of the *Subject Merchandise* and producers of the *Subject Merchandise* in each *Subject Country* that currently export or have exported *Subject Merchandise* to the United States or other countries after 2014.

(7) A list of 3–5 leading purchasers in the U.S. market for the *Domestic Like Product* and the *Subject Merchandise* (including street address, World Wide Web address, and the name, telephone number, fax number, and Email address of a responsible official at each firm).

(8) A list of known sources of information on national or regional prices for the *Domestic Like Product* or the *Subject Merchandise* in the U.S. or other markets.

(9) If you are a U.S. producer of the *Domestic Like Product,* provide the following information on your firm's operations on that product during calendar year 2019, except as noted (report quantity data in short tons and value data in U.S. dollars, f.o.b. plant). If you are a union/worker group or trade/business association, provide the information, on an aggregate basis, for the firms in which your workers are employed/which are members of your association.

(a) Production (quantity) and, if known, an estimate of the percentage of total U.S. production of the *Domestic Like Product* accounted for by your firm's(s') production;

(b) Capacity (quantity) of your firm to produce the *Domestic Like Product* (that is, the level of production that your establishment(s) could reasonably have expected to attain during the year, assuming normal operating conditions (using equipment and machinery in place and ready to operate), normal operating levels (hours per week/weeks per year), time for downtime, maintenance, repair, and cleanup, and a typical or representative product mix);

(c) the quantity and value of U.S. commercial shipments of the *Domestic Like Product* produced in your U.S. plant(s);

(d) the quantity and value of U.S. internal consumption/company transfers of the *Domestic Like Product* produced in your U.S. plant(s); and

(e) the value of (i) net sales, (ii) cost of goods sold (COGS), (iii) gross profit, (iv) selling, general and administrative (SG&A) expenses, and (v) operating income of the *Domestic Like Product* produced in your U.S. plant(s) (include both U.S. and export commercial sales, internal consumption, and company transfers) for your most recently completed fiscal year (identify the date on which your fiscal year ends).

(10) If you are a U.S. importer or a trade/business association of U.S. importers of the *Subject Merchandise* from any *Subject Country,* provide the following information on your firm's(s') operations on that product during calendar year 2019 (report quantity data in short tons and value data in U.S. dollars). If you are a trade/business association, provide the information, on an aggregate basis, for the firms which are members of your association.

(a) The quantity and value (landed, duty-paid but not including antidumping duties) of U.S. imports and, if known, an estimate of the percentage of total U.S. imports of *Subject Merchandise* from each *Subject Country* accounted for by your firm's(s') imports;

(b) the quantity and value (f.o.b. U.S. port, including antidumping duties) of U.S. commercial shipments of *Subject Merchandise* imported from each *Subject Country;* and

(c) the quantity and value (f.o.b. U.S. port, including antidumping duties) of U.S. internal consumption/company transfers of *Subject Merchandise* imported from each *Subject Country.*

(11) If you are a producer, an exporter, or a trade/business association of producers or exporters of the *Subject Merchandise* in any *Subject Country,* provide the following information on your firm's(s') operations on that product during calendar year 2019 (report quantity data in short tons and value data in U.S. dollars, landed and duty-paid at the U.S. port but not including antidumping duties). If you are a trade/business association, provide the information, on an aggregate basis, for the firms which are members of your association.

(a) Production (quantity) and, if known, an estimate of the percentage of total production of *Subject Merchandise* in each *Subject Country* accounted for by your firm's(s') production;

(b) Capacity (quantity) of your firm(s) to produce the *Subject Merchandise* in each *Subject Country* (that is, the level of production that your establishment(s) could reasonably have expected to attain during the year, assuming normal operating conditions (using equipment and machinery in place and ready to operate), normal operating levels (hours per week/weeks per year), time for downtime, maintenance, repair, and cleanup, and a typical or representative product mix); and

(c) the quantity and value of your firm's(s') exports to the United States of *Subject Merchandise* and, if known, an estimate of the percentage of total exports to the United States of *Subject Merchandise* from each *Subject Country* accounted for by your firm's(s') exports.

(12) Identify significant changes, if any, in the supply and demand conditions or business cycle for the *Domestic Like Product* that have occurred in the United States or in the market for the *Subject Merchandise* in each *Subject Country* after 2014, and significant changes, if any, that are likely to occur within a reasonably foreseeable time. Supply conditions to consider include technology; production methods; development efforts; ability to increase production (including the shift of production facilities used for other products and the use, cost, or availability of major inputs into production); and factors related to the ability to shift supply among different national markets (including barriers to importation in foreign markets or changes in market demand abroad). Demand conditions to consider include end uses and applications; the existence and availability of substitute products; and the level of competition among the *Domestic Like Product* produced in the United States, *Subject Merchandise* produced in each *Subject Country,* and such merchandise from other countries.

(13) *(Optional)* A statement of whether you agree with the above definitions of the *Domestic Like Product* and *Domestic Industry;* if you disagree with either or both of these definitions, please explain why and provide alternative definitions.

Authority: This proceeding is being conducted under authority of title VII of the Tariff Act of 1930; this notice is published pursuant to § 207.61 of the Commission's rules.

By order of the Commission.

Issued: October 28, 2020.

Lisa Barton,

Secretary to the Commission.

[FR Doc. 2020–24216 Filed 10–30–20; 8:45 am]

BILLING CODE 7020–02–P

DEPARTMENT OF LABOR

Employment and Training Administration

Labor Surplus Area Classification

AGENCY: Employment and Training Administration, Labor.

ACTION: Notice.

SUMMARY: The purpose of this notice is to announce the annual Labor Surplus Area (LSA) list for Fiscal Year (FY) 2021.

DATES: The annual LSA list is effective October 1, 2020, for all states, the District of Columbia, and Puerto Rico.

FOR FURTHER INFORMATION CONTACT: Samuel Wright, Office of Workforce Investment, Employment and Training Administration, 200 Constitution Avenue NW, Room C–4514, Washington, DC 20210. Telephone: (202) 693–2870 (This is not a toll-free number) or email *wright.samuel.e@dol.gov.*

SUPPLEMENTARY INFORMATION: The Department of Labor's regulations implementing Executive Orders 12073 and 10582 are set forth at 20 CFR part 654, subpart A. These regulations require the Employment and Training Administration (ETA) to classify jurisdictions as LSAs pursuant to the criteria specified in the regulations, and to publish annually a list of LSAs. Pursuant to those regulations, ETA is hereby publishing the annual LSA list.

In addition, the regulations provide exceptional circumstance criteria for classifying LSAs when catastrophic events, such as natural disasters, plant closings, and contract cancellations are expected to have a long-term impact on labor market area conditions, discounting temporary or seasonal factors. Please note, high unemployment due to COVID–19 will be considered an exceptional circumstance.

Eligible Labor Surplus Areas

A LSA is a civil jurisdiction that has a civilian average annual unemployment rate during the previous two calendar years of 20 percent or more above the average annual civilian unemployment rate for all states during the same 24-month reference period. ETA uses only official unemployment estimates provided by the Bureau of Labor Statistics in making these classifications. The average unemployment rate for all states includes data for the Commonwealth of Puerto Rico. The LSA classification criteria stipulate a civil jurisdiction must have a ''floor unemployment rate'' of 6 percent or higher to be classified a LSA. Any civil jurisdiction that has a ''ceiling unemployment rate'' of 10 percent or higher is classified a LSA.

Civil jurisdictions are defined as follows:

1. A city of at least 25,000 population on the basis of the most recently available estimates from the Bureau of the Census; or

2. A town or township in the States of Michigan, New Jersey, New York, or Pennsylvania of 25,000 or more population and which possess powers and functions similar to those of cities; or

3. All counties, except for those counties which contain any type of civil jurisdictions defined in ''1'' or ''2'' above; or

4. A ''balance of county'' consisting of a county less any component cities and townships identified in ''1'' or ''2'' above; or

5. A county equivalent which is a town in the States of Connecticut, Massachusetts, and Rhode Island, or a municipio in the Commonwealth of Puerto Rico.

Procedures for Classifying Labor Surplus Areas

The Department of Labor (DOL) issues the LSA list on a fiscal year basis. The list becomes effective each October 1, and remains in effect through the following September 30. The reference period used in preparing the current list was January 2018 through December 2019. The national average unemployment rate (including Puerto Rico) during this period is rounded to 3.8 percent. Twenty percent higher than the national unemployment rate during this period is rounded to 4.6 percent. Since the calculated unemployment rate plus 20 percent (4.6 percent) is below the ''floor'' LSA unemployment rate of 6 percent, a civil jurisdiction must have a two-year unemployment rate of 6 percent or higher in order to be classified a LSA. To ensure that all areas classified as labor surplus meet the requirements, when a city is part of a county and meets the unemployment qualifier as a LSA, that city is identified in the LSA list, the balance of county, not the entire county, will be identified as a LSA if the balance of county also meets the LSA unemployment criteria. The FY 2019 LSA list, statistical data on the current and previous years' LSAs are available at *www.dol.gov/agencies/eta/lsa.*

Petition for Exceptional Circumstance Consideration

The classification procedures also provide criteria for the designation of LSAs under exceptional circumstances criteria. These procedures permit the regular classification criteria to be waived when an area experiences a significant increase in unemployment which is not temporary or seasonal and which was not reflected in the data for the 2-year reference period. Under the program's exceptional circumstance procedures, LSA classifications can be made for civil jurisdictions, Metropolitan Statistical Areas or Combined Statistical Areas, as defined by the U.S. Office of Management and Budget. In order for an area to be classified as a LSA under the exceptional circumstance criteria, the state workforce agency must submit a petition requesting such classification to the Department of Labor's ETA. The current criteria for an exceptional circumstance classification are:

1. An area's unemployment rate is at least 6 percent for each of the three most recent months;

2. A projected unemployment rate of at least 6 percent for each of the next 12 months because of an event; and

3. Documentation that the exceptional circumstance event has occurred. The state workforce agency may file petitions on behalf of civil jurisdictions, Metropolitan Statistical Areas, or Micropolitan Statistical Areas. Please note, high unemployment due to COVID–19 will be considered an exceptional circumstance.

State Workforce Agencies may submit petitions in electronic format to *wright.samuel.e@dol.gov,* or in hard copy to the U.S. Department of Labor, Employment and Training Administration, Office of Workforce Investment, 200 Constitution Avenue NW, Room C–4514, Washington, DC 20210, Attention Samuel Wright. Data collection for the petition is approved under OMB 1205–0207, expiration date May 31, 2023.

Signed at Washington, DC.

John Pallasch,

Assistant Secretary for Employment and Training Administration.

[FR Doc. 2020–24153 Filed 10–30–20; 8:45 am]

BILLING CODE 4510–FN–P

NATIONAL FOUNDATION ON THE ARTS AND THE HUMANITIES

National Endowment for the Humanities

Meeting of National Council on the Humanities

AGENCY: National Endowment for the Humanities; National Foundation on the Arts and the Humanities.

ACTION: Notice of meeting.

SUMMARY: Pursuant to the Federal Advisory Committee Act, notice is hereby given that the National Council on the Humanities will meet to advise the Chairman of the National Endowment for the Humanities (NEH)

with respect to policies, programs and procedures for carrying out his functions; to review applications for financial assistance under the National Foundation on the Arts and Humanities Act of 1965 and make recommendations thereon to the Chairman; and to consider gifts offered to NEH and make recommendations thereon to the Chairman.

DATES: The meeting will be held on Thursday, November 19, 2020, from 11:00 a.m. until 2:30 p.m., and Friday, November 20, 2020, from 11:00 a.m. until adjourned.

ADDRESSES: The meeting will be held by videoconference originating at Constitution Center, 400 7th Street SW, Washington, DC 20506.

FOR FURTHER INFORMATION CONTACT: Elizabeth Voyatzis, Committee Management Officer, 400 7th Street SW, 4th Floor, Washington, DC 20506; (202) 606–8322; *evoyatzis@neh.gov.*

SUPPLEMENTARY INFORMATION: The National Council on the Humanities is meeting pursuant to the National Foundation on the Arts and Humanities Act of 1965 (20 U.S.C. 951–960, as amended). The following Committees of the National Council on the Humanities will convene by videoconference on November 19, 2020, from 11:00 a.m. until 2:30 p.m., to discuss specific grant applications and programs before the Council:

Challenge Programs;
Digital Humanities;
Education Programs;
Federal/State Partnership;
Preservation and Access;
Public Programs; and
Research Programs.

The plenary session of the National Council on the Humanities will convene by videoconference on November 20, 2020, at 11:00 a.m. The agenda for the plenary session will be as follows:

A. Minutes of Previous Meeting
B. Reports
1. Chairman's Remarks
2. Senior Deputy Chairman's Remarks
3. Reports on Policy and General Matters
a. Challenge Programs
b. Digital Humanities
c. Education Programs
d. Federal/State Partnership
e. Preservation and Access
f. Public Programs
g. Research Programs

This meeting of the National Council on the Humanities will be closed to the public pursuant to sections 552b(c)(4), 552b(c)(6), and 552b(c)(9)(B) of Title 5 U.S.C., as amended, because it will include review of personal and/or proprietary financial and commercial information given in confidence to the agency by grant applicants, and discussion of certain information, the premature disclosure of which could significantly frustrate implementation of proposed agency action. I have made this determination pursuant to the authority granted me by the Chairman's Delegation of Authority to Close Advisory Committee Meetings dated April 15, 2016.

Dated: October 27, 2020.

Caitlin Cater,

Attorney-Advisor, National Endowment for the Humanities.

[FR Doc. 2020–24157 Filed 10–30–20; 8:45 am]

BILLING CODE 7536–01–P

OFFICE OF PERSONNEL MANAGEMENT

Federal Prevailing Rate Advisory Committee; Virtual Public Meeting

AGENCY: Office of Personnel Management.

ACTION: Notice.

SUMMARY: According to the provisions of section 10 of the Federal Advisory Committee Act (Pub. L. 92–463), notice is hereby given that the November 19, 2020, meeting of the Federal Prevailing Rate Advisory Committee previously announced in the **Federal Register** on Monday, December 23, 2019, at 84 FR 70580, is being changed to a virtual meeting via teleconference. There will be no in-person gathering for this meeting.

This meeting will be open to the public, with an audio option for listening. This notice sets forth the agenda for the meeting and the participation guidelines.

DATES: The virtual meeting will be held on November 19, 2020, beginning at 10:00 a.m. (EST).

ADDRESSES: The meeting will convene virtually.

FOR FURTHER INFORMATION CONTACT: Madeline Gonzalez, 202–606–2858, or email *pay-leave-policy@opm.gov.*

SUPPLEMENTARY INFORMATION:

Meeting Agenda. The tentative agenda for this meeting includes the following Federal Wage System items:

- The definition of Monroe County, PA.
- The definition of San Joaquin County, CA.
- The definition of the Salinas-Monterey, CA, wage area.
- The definition of the Puerto Rico wage area.

Public Participation: The November 19, 2020, meeting of the Federal Prevailing Rate Advisory Committee is open to the public through advance registration. Public participation is available for the teleconference by audio access only. All individuals who plan to attend the virtual public meeting to listen must register by sending an email to *pay-leave-policy@opm.gov* with the subject line ''November 19 FPRAC Meeting'' no later than Tuesday, November 17, 2020.

The following information must be provided when registering:

- Name.
- Agency and duty station.
- Email address.
- Your topic of interest.

Members of the press, in addition to registering for this event, must also RSVP to *media@opm.gov* by November 17, 2020.

A confirmation email will be sent upon receipt of the registration. Audio teleconference information for participation will be sent to registrants the morning of the virtual meeting.

Office of Personnel Management.

Alexys Stanley,

Regulatory Affairs Analyst.

[FR Doc. 2020–24145 Filed 10–30–20; 8:45 am]

BILLING CODE 6325–38–P

POSTAL REGULATORY COMMISSION

[Docket No. RM2020–9; Order No. 5738]

Periodic Reporting

AGENCY: Postal Regulatory Commission.

ACTION: Notice.

SUMMARY: The Commission is establishing a comment deadline in this docket. This notice informs the public of the filing, invites public comment, and takes other administrative steps.

DATES: *Comments are due:* December 15, 2020.

ADDRESSES: Submit comments electronically via the Commission's Filing Online system at *http://www.prc.gov.* Those who cannot submit comments electronically should contact the person identified in the **FOR FURTHER INFORMATION CONTACT** section by telephone for advice on filing alternatives.

FOR FURTHER INFORMATION CONTACT: David A. Trissell, General Counsel, at 202–789–6820.

SUPPLEMENTARY INFORMATION: A video technical conference was held online in this proceeding via WebEx on September 29, 2020, to consider matters raised by the United Parcel Service proposal (UPS Proposal One) that is the

subject of this docket.[1] In its order establishing this proceeding, the Commission stated that it would issue further orders prescribing additional procedures. Order No. 5586 at 6. To afford interested persons an opportunity to address matters raised by UPS Proposal One and discussed at the September 29, 2020 technical conference, the Commission is hereby establishing December 15, 2020, as the deadline for filing written comments.

It is ordered:

1. Comments by interested persons shall be filed on or before December 15, 2020.

2. The Secretary shall arrange for publication of this order in the **Federal Register**.

By the Commission.

Erica A. Barker,

Secretary.

[FR Doc. 2020–24115 Filed 10–30–20; 8:45 am]

BILLING CODE 7710–FW–P

[1] *See* Notice and Order Establishing Docket to Obtain Information Regarding Proposed Changes to Cost Methodologies and Scheduling Technical Conference, July 13, 2020, at 3–5 (Order No. 5586).

SECURITIES AND EXCHANGE COMMISSION

[Investment Company Act Release No. 34075; 812–15100]

Investment Managers Series Trust II and AXS Investments LLC

October 27, 2020.

AGENCY: Securities and Exchange Commission (''Commission'').

ACTION: Notice.

Notice of an application under section 6(c) of the Investment Company Act of 1940 (''Act'') for an exemption from section 15(a) of the Act, as well as from certain disclosure requirements in rule 20a–1 under the Act, Item 19(a)(3) of Form N–1A, Items 22(c)(1)(ii), 22(c)(1)(iii), 22(c)(8) and 22(c)(9) of Schedule 14A under the Securities Exchange Act of 1934 (''1934 Act''), and sections 6–07(2)(a), (b), and (c) of Regulation S–X (''Disclosure Requirements'').

APPLICANTS: Investment Managers Series Trust II (''Trust''), a Delaware statutory trust registered under the Act as an open-end management investment company with multiple series (each a ''Fund'') and AXS Investments LLC (''Initial Adviser''), a Delaware limited liability company registered as an investment adviser under the Investment Advisers Act of 1940 (''Advisers Act'') that serves an investment adviser to the Funds (collectively with the Trust, the ''Applicants'').

SUMMARY OF APPLICATION: The requested exemption would permit Applicants to enter into and materially amend subadvisory agreements with subadvisers without shareholder approval and would grant relief from the Disclosure Requirements as they relate to fees paid to the subadvisers.

FILING DATES: The application was filed on February 26, 2020, and amended on June 1, 2020, and September 16, 2020.

HEARING OR NOTIFICATION OF HEARING: An order granting the requested relief will be issued unless the Commission orders a hearing. Interested persons may request a hearing by emailing the Commission's Secretary at *Secretarys-Office@sec.gov* and serving Applicants with a copy of the request by email. Hearing requests should be received by the Commission by 5:30 p.m. on November 20, 2020, and should be accompanied by proof of service on the Applicants, in the form of an affidavit, or, for lawyers, a certificate of service. Pursuant to rule 0–5 under the Act, hearing requests should state the nature of the writer's interest, any facts bearing upon the desirability of a hearing on the matter, the reason for the request, and the issues contested. Persons who wish to be notified of a hearing may request notification by emailing the Commission's Secretary.

ADDRESSES: The Commission: *Secretarys-Office@sec.gov.* Applicants: *imsttrusts@mfac-ca.com.*

FOR FURTHER INFORMATION CONTACT: Bruce R. MacNeil, Senior Counsel, at (202) 551–6817, or Kaitlin C. Bottock, Branch Chief, at (202) 551–6821 (Division of Investment Management, Chief Counsel's Office).

SUPPLEMENTARY INFORMATION: The following is a summary of the application. The complete application may be obtained via the Commission's website by searching for the file number or an Applicant using the ''Company'' name box, at *http://www.sec.gov/search/search.htm* or by calling (202) 551–8090.

I. Requested Exemptive Relief

1. Applicants request an order to permit the Adviser,[1] subject to the approval of the board of trustees of the Trust (collectively, the ''Board''),[2] including a majority of the trustees who are not ''interested persons'' of the Trust or the Adviser, as defined in section 2(a)(19) of the Act (the ''Independent Trustees''), without obtaining shareholder approval, to: (i) Select investment subadvisers (''Subadvisers'') for all or a portion of the assets of one or more of the Funds pursuant to an investment subadvisory agreement with each Subadviser (each a ''Subadvisory Agreement''); and (ii) materially amend Subadvisory Agreements with the Subadvisers.

2. Applicants also request an order exempting the Subadvised Funds (as defined below) from the Disclosure Requirements, which require each Fund to disclose fees paid to a Subadviser. Applicants seek relief to permit each Subadvised Fund to disclose (as a dollar amount and a percentage of the Fund's net assets): (i) The aggregate fees paid to the Adviser and any Wholly-Owned Subadvisers; and (ii) the aggregate fees paid to Affiliated and Non-Affiliated Subadvisers (''Aggregate Fee Disclosure'').[3] Applicants seek an exemption to permit a Subadvised Fund to include only the Aggregate Fee Disclosure.[4]

3. Applicants request that the relief apply to Applicants, as well as to any any other existing or future registered open-end management investment company or series thereof that intends to rely on the requested order in the future and that: (i) Is advised by the Adviser; (ii) uses the multi-manager structure described in the application; and (iii) complies with the terms and

[1] The term ''Adviser'' means (i) the Initial Adviser, (ii) its successors, and (iii) any entity controlling, controlled by or under common control with, the Initial Adviser or its successors that serves as the primary adviser to a Subadvised Fund. For the purposes of the requested order, ''successor'' is limited to an entity or entities that result from a reorganization into another jurisdiction or a change in the type of business organization. Any other Adviser also will be registered with the Commission as an investment adviser under the Advisers Act.

[2] The term ''Board'' also includes the board of trustees or directors of a future Subadvised Fund (as defined below), if different from the board of trustees (''Trustees'') of the Trust.

[3] A ''Wholly-Owned Subadviser'' is any investment adviser that is (1) an indirect or direct ''wholly-owned subsidiary'' (as such term is defined in the Act) of the Adviser, (2) a ''sister company'' of the Adviser that is an indirect or direct ''wholly-owned subsidiary'' of the same company that indirectly or directly wholly owns the Adviser (the Adviser's ''parent company''), or (3) a parent company of the Adviser. An ''Affiliated Subadviser'' is any investment subadviser that is not a Wholly-Owned Subadviser, but is an ''affiliated person'' (as defined in section 2(a)(3) of the Act) of a Subadvised Fund or the Adviser for reasons other than serving as investment subadviser to one or more Funds. A ''Non-Affiliated Subadviser'' is any investment adviser that is not an ''affiliated person'' (as defined in the Act) of a Fund or the Adviser, except to the extent that an affiliation arises solely because the Subadviser serves as a subadviser to one or more Funds.

[4] Applicants note that all other items required by sections 6–07(2)(a), (b) and (c) of Regulation S–X will be disclosed.

conditions of the application (each, a ''Subadvised Fund'').[5]

II. Management of the Subadvised Funds

4. The Adviser serves or will serve as the investment adviser to each Subadvised Fund pursuant to an investment advisory agreement with the Fund (each an ''Investment Advisory Agreement''). Each Investment Advisory Agreement has been or will be approved by the Board, including a majority of the Independent Trustees, and by the shareholders of the relevant Subadvised Fund in the manner required by sections 15(a) and 15(c) of the Act. The terms of these Investment Advisory Agreements comply or will comply with section 15(a) of the Act. Applicants are not seeking an exemption from the Act with respect to the Investment Advisory Agreements. Pursuant to the terms of each Investment Advisory Agreement, the Adviser, subject to the oversight of the Board, will provide continuous investment management for each Subadvised Fund. For its services to each Subadvised Fund, the Adviser receives or will receive an investment advisory fee from that Fund as specified in the applicable Investment Advisory Agreement.

5. Consistent with the terms of each Investment Advisory Agreement, the Adviser may, subject to the approval of the Board, including a majority of the Independent Trustees, and the shareholders of the applicable Subadvised Fund (if required by applicable law), delegate portfolio management responsibilities of all or a portion of the assets of a Subadvised Fund to a Subadviser. The Adviser will retain overall responsibility for the management and investment of the assets of each Subadvised Fund. This responsibility includes recommending the removal or replacement of Subadvisers, allocating the portion of that Subadvised Fund's assets to any given Subadviser and reallocating those assets as necessary from time to time.[6] The Subadvisers will be ''investment advisers'' to the Subadvised Funds within the meaning of Section 2(a)(20) of the Act and will provide investment management services to the Funds subject to, without limitation, the requirements of Sections 15(c) and 36(b) of the Act.[7] The Subadvisers, subject to the oversight of the Adviser and the Board, will determine the securities and other investments to be purchased, sold or entered into by a Subadvised Fund's portfolio or a portion thereof, and will place orders with brokers or dealers that they select.[8]

6. The Subadvisory Agreements will be approved by the Board, including a majority of the Independent Trustees, in accordance with sections 15(a) and 15(c) of the Act. In addition, the terms of each Subadvisory Agreement will comply fully with the requirements of section 15(a) of the Act. The Adviser may compensate the Subadvisers or the Subadvised Funds may compensate the Subadvisers directly.

7. Subadvised Funds will inform shareholders of the hiring of a new Subadviser pursuant to the following procedures (''Modified Notice and Access Procedures''): (a) Within 90 days after a new Subadviser is hired for any Subadvised Fund, that Fund will send its shareholders either a Multi-manager Notice or a Multi-manager Notice and Multi-manager Information Statement;[9] and (b) the Subadvised Fund will make the Multi-manager Information Statement available on the website identified in the Multi-manager Notice no later than when the Multi-manager Notice (or Multi-manager Notice and Multi-manager Information Statement) is first sent to shareholders, and will maintain it on that website for at least 90 days.[10]

III. Applicable Law

8. Section 15(a) of the Act states, in part, that it is unlawful for any person to act as an investment adviser to a registered investment company ''except pursuant to a written contract, which contract, whether with such registered company or with an investment adviser of such registered company, has been approved by the vote of a majority of the outstanding voting securities of such registered company.''

9. Form N–1A is the registration statement used by open-end investment companies. Item 19(a)(3) of Form N–1A requires a registered investment company to disclose in its statement of additional information the method of computing the ''advisory fee payable'' by the investment company with respect to each investment adviser, including the total dollar amounts that the investment company ''paid to the adviser (aggregated with amounts paid to affiliated advisers, if any), and any advisers who are not affiliated persons of the adviser, under the investment advisory contract for the last three fiscal years.''

10. Rule 20a–1 under the Act requires proxies solicited with respect to a registered investment company to comply with Schedule 14A under the 1934 Act. Items 22(c)(1)(ii), 22(c)(1)(iii), 22(c)(8) and 22(c)(9) of Schedule 14A, taken together, require a proxy statement for a shareholder meeting at which the advisory contract will be voted upon to include the ''rate of compensation of the investment adviser,'' the ''aggregate amount of the investment adviser's fee,'' a description of the ''terms of the contract to be acted upon,'' and, if a change in the advisory fee is proposed, the existing and proposed fees and the difference between the two fees.

11. Regulation S–X sets forth the requirements for financial statements required to be included as part of a registered investment company's registration statement and shareholder reports filed with the Commission. Sections 6–07(2)(a), (b), and (c) of Regulation S–X require a registered investment company to include in its

[5] All registered open-end investment companies that currently intend to rely on the requested order are named as Applicants. Any entity that relies on the requested order will do so only in accordance with the terms and conditions contained in the application.

[6] Applicants represent that if the name of any Subadvised Fund contains the name of a subadviser, the name of the Adviser that serves as the primary adviser to the Fund, or a trademark or trade name that is owned by or publicly used to identify the Adviser, will precede the name of the subadviser.

[7] The Subadvisers will be registered with the Commission as an investment adviser under the Advisers Act or not subject to such registration.

[8] A ''Subadviser'' also includes an investment subadviser that will provide the Adviser with a model portfolio reflecting a specific strategy, style or focus with respect to the investment of all or a portion of a Subadvised Fund's assets. The Adviser may use the model portfolio to determine the securities and other instruments to be purchased, sold or entered into by a Subadvised Fund's portfolio or a portion thereof, and place orders with brokers or dealers that it selects.

[9] A ''Multi-manager Notice'' will be modeled on a Notice of internet Availability as defined in Rule 14a–16 under the 1934 Act, and specifically will, among other things: (a) Summarize the relevant information regarding the new Subadviser (except as modified to permit Aggregate Fee Disclosure); (b) inform shareholders that the Multi-manager Information Statement is available on a website; (c) provide the website address; (d) state the time period during which the Multi-manager Information Statement will remain available on that website; (e) provide instructions for accessing and printing the Multi-manager Information Statement; and (f) instruct the shareholder that a paper or email copy of the Multi-manager Information Statement may be obtained, without charge, by contacting the Subadvised Fund. A ''Multi-manager Information Statement'' will meet the requirements of Regulation 14C, Schedule 14C and Item 22 of Schedule 14A under the 1934 Act for an information statement, except as modified by the requested order to permit Aggregate Fee Disclosure. Multi-manager Information Statements will be filed with the Commission via the EDGAR system.

[10] In addition, Applicants represent that whenever a Subadviser is hired or terminated, or a Subadvisory Agreement is materially amended, the Subadvised Fund's prospectus and statement of additional information will be supplemented promptly pursuant to rule 497(e) under the Securities Act of 1933.

financial statements information about investment advisory fees.

12. Section 6(c) of the Act provides that the Commission may exempt any person, security, or transaction or any class or classes of persons, securities, or transactions from any provisions of the Act, or any rule thereunder, if such exemption is necessary or appropriate in the public interest and consistent with the protection of investors and the purposes fairly intended by the policy and provisions of the Act. Applicants state that the requested relief meets this standard for the reasons discussed below.

IV. Arguments in Support of the Requested Relief

13. Applicants assert that, from the perspective of the shareholder, the role of the Subadvisers is substantially equivalent to the limited role of the individual portfolio managers employed by an investment adviser to a traditional investment company. Applicants also assert that the shareholders expect the Adviser, subject to review and approval of the Board, to select a Subadviser who is in the best position to achieve the Subadvised Fund's investment objective. Applicants believe that permitting the Adviser to perform the duties for which the shareholders of the Subadvised Fund are paying the Adviser—the selection, oversight and evaluation of the Subadviser—without incurring unnecessary delays or expenses of convening special meetings of shareholders is appropriate and in the interest of the Fund's shareholders, and will allow such Fund to operate more efficiently. Applicants state that each Investment Advisory Agreement will continue to be fully subject to section 15(a) of the Act and approved by the relevant Board, including a majority of the Independent Trustees, in the manner required by section 15(a) and 15(c) of the Act.

14. Applicants submit that the requested relief meets the standards for relief under section 6(c) of the Act. Applicants state that the operation of the Subadvised Fund in the manner described in the Application must be approved by shareholders of that Fund before it may rely on the requested relief. Applicants also state that the proposed conditions to the requested relief are designed to address any potential conflicts of interest or economic incentives, and provide that shareholders are informed when new Subadvisers are hired.

15. Applicants contend that, in the circumstances described in the application, a proxy solicitation to approve the appointment of new Subadvisers provides no more meaningful information to shareholders than the proposed Multi-manager Information Statement. Applicants state that, accordingly, they believe the requested relief is necessary or appropriate in the public interest, and consistent with the protection of investors and the purposes fairly intended by the policy and provisions of the Act.

16. With respect to the relief permitting Aggregate Fee Disclosure, Applicants assert that disclosure of the individual fees paid to the Subadvisers does not serve any meaningful purpose. Applicants contend that the primary reasons for requiring disclosure of individual fees paid to Subadvisers are to inform shareholders of expenses to be charged by a particular Subadvised Fund and to enable shareholders to compare the fees to those of other comparable investment companies. Applicants believe that the requested relief satisfies these objectives because the Subadvised Fund's overall advisory fee will be fully disclosed and, therefore, shareholders will know what the Subadvised Fund's fees and expenses are and will be able to compare the advisory fees a Subadvised Fund is charged to those of other investment companies. In addition, Applicants assert that the requested relief would benefit shareholders of the Subadvised Fund because it would improve the Adviser's ability to negotiate the fees paid to Subadvisers. In particular, Applicants state that if the Adviser is not required to disclose the Subadvisers' fees to the public, the Adviser may be able to negotiate rates that are below a Subadviser's ''posted'' amounts. Applicants assert that the relief will also encourage Subadvisers to negotiate lower subadvisory fees with the Adviser if the lower fees are not required to be made public.

V. Relief for Affiliated Subadvisers

17. The Commission has granted the requested relief with respect to Wholly-Owned and Non-Affiliated Subadvisers through numerous exemptive orders. The Commission also has extended the requested relief to Affiliated Subadvisers.[11] Applicants state that although the Adviser's judgment in recommending a Subadviser can be affected by certain conflicts, they do not warrant denying the extension of the requested relief to Affiliated Subadvisers. Specifically, the Adviser faces those conflicts in allocating fund assets between itself and a Subadviser, and across Subadvisers, as it has an interest in considering the benefit it will receive, directly or indirectly, from the fee the Subadvised Fund pays for the management of those assets. Applicants also state that to the extent the Adviser has a conflict of interest with respect to the selection of an Affiliated Subadviser, the proposed conditions are protective of shareholder interests by ensuring the Board's independence and providing the Board with the appropriate resources and information to monitor and address conflicts.

18. With respect to the relief permitting Aggregate Fee Disclosure, Applicants assert that it is appropriate to disclose only aggregate fees paid to Affiliated Subadvisers for the same reasons that similar relief has been granted previously with respect to Wholly-Owned and Non-Affiliated Subadvisers.

VI. Applicants' Conditions

Applicants agree that any order granting the requested relief will be subject to the following conditions:

1. Before a Subadvised Fund may rely on the order requested in the Application, the operation of the Subadvised Fund in the manner described in the Application will be, or has been, approved by a majority of the Subadvised Fund's outstanding voting securities as defined in the Act, or, in the case of a Subadvised Fund whose public shareholders purchase shares on the basis of a prospectus containing the disclosure contemplated by condition 2 below, by the initial shareholder before such Subadvised Fund's shares are offered to the public.

2. The prospectus for each Subadvised Fund will disclose the existence, substance and effect of any order granted pursuant to the Application. In addition, each Subadvised Fund will hold itself out to the public as employing the multi-manager structure described in the Application. The prospectus will prominently disclose that the Adviser has the ultimate responsibility, subject to oversight by the Board, to oversee the Subadvisers and recommend their hiring, termination, and replacement.

3. The Adviser will provide general management services to each Subadvised Fund, including overall supervisory responsibility for the general management and investment of the Subadvised Fund's assets, and subject to review and oversight of the Board, will (i) set the Subadvised Fund's overall investment strategies, (ii) evaluate, select, and recommend Subadvisers for all or a portion of the

[11] *Carillon Series Trust, et al.,* Investment Co. Act Rel. Nos. 33464 (May 2, 2019) (notice) and 33494 (May 29, 2019) (order).

Subadvised Fund's assets, (iii) allocate and, when appropriate, reallocate the Subadvised Fund's assets among Subadvisers, (iv) monitor and evaluate the Subadvisers' performance, and (v) implement procedures reasonably designed to ensure that Subadvisers comply with the Subadvised Fund's investment objective, policies and restrictions.

4. Subadvised Funds will inform shareholders of the hiring of a new Subadviser within 90 days after the hiring of the new Subadviser pursuant to the Modified Notice and Access Procedures.

5. At all times, at least a majority of the Board will be Independent Trustees, and the selection and nomination of new or additional Independent Trustees will be placed within the discretion of the then-existing Independent Trustees.

6. Independent Legal Counsel, as defined in Rule 0–1(a)(6) under the Act, will be engaged to represent the Independent Trustees. The selection of such counsel will be within the discretion of the then-existing Independent Trustees.

7. Whenever a Subadviser is hired or terminated, the Adviser will provide the Board with information showing the expected impact on the profitability of the Adviser.

8. The Board must evaluate any material conflicts that may be present in a subadvisory arrangement. Specifically, whenever a subadviser change is proposed for a Subadvised Fund (''Subadviser Change'') or the Board considers an existing Subadvisory Agreement as part of its annual review process (''Subadviser Review''):

(a) The Adviser will provide the Board, to the extent not already being provided pursuant to section 15(c) of the Act, with all relevant information concerning:

(i) Any material interest in the proposed new Subadviser, in the case of a Subadviser Change, or the Subadviser in the case of a Subadviser Review, held directly or indirectly by the Adviser or a parent or sister company of the Adviser, and any material impact the proposed Subadvisory Agreement may have on that interest;

(ii) any arrangement or understanding in which the Adviser or any parent or sister company of the Adviser is a participant that (A) may have had a material effect on the proposed Subadviser Change or Subadviser Review, or (B) may be materially affected by the proposed Subadviser Change or Subadviser Review;

(iii) any material interest in a Subadviser held directly or indirectly by an officer or Trustee of the Subadvised Fund, or an officer or board member of the Adviser (other than through a pooled investment vehicle not controlled by such person); and

(iv) any other information that may be relevant to the Board in evaluating any potential material conflicts of interest in the proposed Subadviser Change or Subadviser Review.

(b) the Board, including a majority of the Independent Trustees, will make a separate finding, reflected in the Board minutes, that the Subadviser Change or continuation after Subadviser Review is in the best interests of the Subadvised Fund and its shareholders and, based on the information provided to the Board, does not involve a conflict of interest from which the Adviser, a Subadviser, any officer or Trustee of the Subadvised Fund, or any officer or board member of the Adviser derives an inappropriate advantage.

9. Each Subadvised Fund will disclose in its registration statement the Aggregate Fee Disclosure.

10. In the event that the Commission adopts a rule under the Act providing substantially similar relief to that in the order requested in the Application, the requested order will expire on the effective date of that rule.

11. Any new Subadvisory Agreement or any amendment to an existing Investment Advisory Agreement or Subadvisory Agreement that directly or indirectly results in an increase in the aggregate advisory fee rate payable by the Subadvised Fund will be submitted to the Subadvised Fund's shareholders for approval.

For the Commission, by the Division of Investment Management, under delegated authority.

J. Matthew DeLesDernier,

Assistant Secretary.

[FR Doc. 2020–24160 Filed 10–30–20; 8:45 am]

BILLING CODE 8011–01–P

SECURITIES AND EXCHANGE COMMISSION

Sunshine Act Meetings

TIME AND DATE: 2:00 p.m. on Wednesday, November 4, 2020.

PLACE: The meeting will be held via remote means and/or at the Commission's headquarters, 100 F Street NE, Washington, DC 20549.

STATUS: This meeting will be closed to the public.

MATTERS TO BE CONSIDERED: Commissioners, Counsel to the Commissioners, the Secretary to the Commission, and recording secretaries will attend the closed meeting. Certain staff members who have an interest in the matters also may be present.

In the event that the time, date, or location of this meeting changes, an announcement of the change, along with the new time, date, and/or place of the meeting will be posted on the Commission's website at *https://www.sec.gov.*

The General Counsel of the Commission, or his designee, has certified that, in his opinion, one or more of the exemptions set forth in 5 U.S.C. 552b(c)(3), (5), (6), (7), (8), 9(B) and (10) and 17 CFR 200.402(a)(3), (a)(5), (a)(6), (a)(7), (a)(8), (a)(9)(ii) and (a)(10), permit consideration of the scheduled matters at the closed meeting.

The subject matter of the closed meeting will consist of the following topic:

Institution and settlement of injunctive actions;

Institution and settlement of administrative proceedings;

Resolution of litigation claims;

Disclosure of non-public information; and

Other matters relating to enforcement proceedings.

At times, changes in Commission priorities require alterations in the scheduling of meeting agenda items that may consist of adjudicatory, examination, litigation, or regulatory matters.

CONTACT PERSON FOR MORE INFORMATION: For further information; please contact Vanessa A. Countryman from the Office of the Secretary at (202) 551–5400.

Dated: October 28, 2020.

Vanessa A. Countryman,

Secretary.

[FR Doc. 2020–24285 Filed 10–29–20; 11:15 am]

BILLING CODE 8011–01–P

SECURITIES AND EXCHANGE COMMISSION

[Release No. 34–90275; File No. 265–30]

Fixed Income Market Structure Advisory Committee

AGENCY: Securities and Exchange Commission.

ACTION: Notice of Federal Advisory Committee Renewal.

SUMMARY: The Securities and Exchange Commission is publishing this notice to announce that the Chairman of the Commission, with the concurrence of the other Commissioners, has approved the renewal of the Securities and Exchange Commission Fixed Income Market Structure Advisory Committee.

FOR FURTHER INFORMATION CONTACT: David Dimitrious, Senior Special

Counsel, at (202) 551–5131, or Arisa Kettig, Special Counsel, at (202) 551–5676, Division of Trading and Markets, Securities and Exchange Commission, 100 F Street NE, Washington, DC 20549–7010.

SUPPLEMENTARY INFORMATION: In accordance with the requirements of the Federal Advisory Committee Act, 5 U.S.C.—App, the Commission is publishing this notice that the Chairman of the Commission, with the concurrence of the other Commissioners, has approved the renewal of the Securities and Exchange Commission Fixed Income Market Structure Advisory Committee (the ''Committee''). The Chairman of the Commission affirms that the renewal of the Committee is necessary and in the public interest.[1]

The Committee's objective is to provide the Commission with diverse perspectives on the structure and operations of the U.S. fixed income markets, as well as advice and recommendations on matters related to fixed income market structure.

No more than 21 voting members will be appointed to the Committee. Such members shall represent a cross-section of those directly affected by, interested in, and/or qualified to provide advice to the Commission on matters related to fixed income market structure. The Committee's membership will continue to be balanced fairly in terms of points of view represented. Non-voting members may also be named.

The charter provides that the duties of the Committee are to be solely advisory. The Commission alone will make any determinations of actions to be taken and policies to be expressed with respect to matters within the Commission's jurisdiction. The Committee will meet at such intervals as are necessary to carry out its functions. The charter contemplates that the full Committee will meet one time. Meetings of subgroups or subcommittees of the full Committee may occur more frequently.

The Committee will operate for four-months from the date it is renewed or such earlier date as determined by the Commission unless, before the expiration of that time period, it is renewed in accordance with the Federal Advisory Committee Act. A copy of the charter for the Committee has been filed with the Committee on Banking, Housing, and Urban Affairs of the United States Senate, the Committee on Financial Services of the United States House of Representatives, and the Committee Management Secretariat of the General Services Administration. A copy of the charter as so filed also will be filed with the Chairman of the Commission, furnished to the Library of Congress, and posted on the Commission's website at *www.sec.gov.*

By the Commission.

Dated: October 27, 2020.

Vanessa A. Countryman,

Secretary.

[FR Doc. 2020–24168 Filed 10–30–20; 8:45 am]

BILLING CODE 8011–01–P

[1] *See* 41 CFR 102–3.30(a).

SECURITIES AND EXCHANGE COMMISSION

[Release No. 34–90274; File No. SR–EMERALD–2020–13]

Self-Regulatory Organizations; MIAX Emerald, LLC; Notice of Filing and Immediate Effectiveness of a Proposed Rule Change To Amend Its Fee Schedule To Establish Market Data Fees

October 27, 2020.

Pursuant to Section 19(b)(1) of the Securities Exchange Act of 1934 (''Act''),[1] and Rule 19b–4 thereunder,[2] notice is hereby given that on October 14, 2020, MIAX Emerald, LLC (''MIAX Emerald'' or ''Exchange'') filed with the Securities and Exchange Commission (''Commission'') the proposed rule change as described in Items I, II, and III below, which Items have been prepared by the Exchange. The Commission is publishing this notice to solicit comments on the proposed rule change from interested persons.

I. Self-Regulatory Organization's Statement of the Terms of Substance of the Proposed Rule Change

The Exchange is filing a proposal to amend the MIAX Emerald Fee Schedule (the ''Fee Schedule'') to establish market data fees.

The text of the proposed rule change is available on the Exchange's website at *http://www.miaxoptions.com/rule-filings/emerald,* at MIAX's principal office, and at the Commission's Public Reference Room.

II. Self-Regulatory Organization's Statement of the Purpose of, and Statutory Basis for, the Proposed Rule Change

In its filing with the Commission, the Exchange included statements concerning the purpose of and basis for the proposed rule change and discussed any comments it received on the proposed rule change. The text of these statements may be examined at the places specified in Item IV below. The Exchange has prepared summaries, set forth in sections A, B, and C below, of the most significant aspects of such statements.

A. Self-Regulatory Organization's Statement of the Purpose of, and Statutory Basis for, the Proposed Rule Change

1. Purpose

The Exchange proposes to amend the Fee Schedule to establish market data fees. MIAX Emerald commenced operations as a national securities exchange registered under Section 6 of the Act[3] on March 1, 2019.[4] The Exchange adopted its transaction fees and certain of its non-transaction fees in its filing SR–EMERALD–2019–15.[5] In that filing, the Exchange expressly waived, among others, market data fees to provide an incentive to prospective market participants to become Members[6] of the Exchange. At that time, the Exchange waived market data fees for the Waiver Period[7] and stated that it would provide notice to market participants when the Exchange intended to terminate the Waiver Period.

On September 15, 2020, the Exchange issued a Regulatory Circular which announced, among other things, that the Exchange would be ending the Waiver Period for market data fees, beginning October 1, 2020.[8]

On October 1, 2020, the Exchange filed its proposal to assess fees for its

[1] 15 U.S.C. 78s(b)(1).

[2] 17 CFR 240.19b–4.

[3] 15 U.S.C. 78f.

[4] *See* Securities Exchange Act Release No. 84891 (December 20, 2018), 83 FR 67421 (December 28, 2018) (File No. 10–233) (order approving application of MIAX Emerald, LLC for registration as a national securities exchange).

[5] *See* Securities Exchange Act Release No. 85393 (March 21, 2019), 84 FR 11599 (March 27, 2019) (SR–EMERALD–2019–15) (Notice of Filing and Immediate Effectiveness of a Proposed Rule Change To Establish the MIAX Emerald Fee Schedule).

[6] ''Member'' means an individual or organization approved to exercise the trading rights associated with a Trading Permit. Members are deemed ''members'' under the Exchange Act. *See* Exchange Rule 100 and the Definitions Section of the Fee Schedule.

[7] ''Waiver Period'' means, for each applicable fee, the period of time from the initial effective date of the MIAX Emerald Fee Schedule until such time that the Exchange has an effective fee filing establishing the applicable fee. The Exchange will issue a Regulatory Circular announcing the establishment of an applicable fee that was subject to a Waiver Period at least fifteen (15) days prior to the termination of the Waiver Period and effective date of any such applicable fee. *See* the Definitions Section of the Fee Schedule.

[8] *See* MIAX Emerald Regulatory Circular 2020–41 available at *https://www.miaxoptions.com/sites/default/files/circular-files/MIAX_Emerald_RC_2020_41.pdf.*

market data products, MIAX Emerald Top of Market (''ToM''), Administrative Information Subscriber (''AIS'') feed, and MIAX Order Feed (''MOR'').[9] On October 14, 2020, the Exchange withdrew the First Proposed Rule Change and refiled its proposal in order to provide more description regarding the difference in pricing for internal distributors and external distributors. A more detailed description of the ToM, AIS and MOR products can be found in the Exchange's previously filed Market Data Product filings.[10] The Exchange notes that it will not be assessing fees for Complex Top of Market (''cToM'') [11] data at this time.

To summarize, ToM provides market participants with a direct data feed that includes the Exchange's best bid and offer, with aggregate size, and last sale information, based on displayable order and quoting interest on the Exchange. The ToM data feed includes data that is identical to the data sent to the processor for the Options Price Reporting Authority (''OPRA''). ToM also contains a feature that provides the number of Priority Customer [12] contracts that are included in the size associated with the Exchange's best bid and offer.

AIS provides market participants with a direct data feed that allows subscribers to receive real-time updates of products traded on MIAX Emerald, trading status for MIAX Emerald and products traded on MIAX Emerald, and liquidity seeking event notifications. The AIS market data feed includes opening imbalance condition information, opening routing information, expanded quote range information, post-halt notifications, and liquidity refresh condition information. AIS real-time messages are disseminated over multicast to achieve a fair delivery mechanism. AIS notifications provide current electronic system status allowing subscribers to take necessary actions immediately.

MOR provides market participants with a direct data feed that allows subscribers to receive real-time updates of options orders, products traded on MIAX Emerald, MIAX Emerald Options System status, and MIAX Emerald Options Underlying trading status. Subscribers to the data feed will get a list of all options symbols and strategies that will be traded and sourced on that feed at the start of every session.

The Exchange proposes to charge monthly fees to Distributors (defined below) of the ToM, AIS, and MOR market data products. MIAX Emerald will assess market data fees applicable to the market data products on Internal and External Distributors in each month the Distributor is credentialed to use the applicable market data product in the production environment. A ''Distributor'' of MIAX Emerald data is any entity that receives a feed or file of data either directly from MIAX Emerald or indirectly through another entity and then distributes it either internally (within that entity) or externally (outside that entity). All Distributors are required to execute a MIAX Emerald Distributor Agreement. Market data fees for ToM, AIS, and MOR will be reduced for new Distributors for the first month during which they subscribe to the applicable market data product, based on the number of trading days that have been held during the month prior to the date on which they have been credentialed to use the applicable market data product in the production environment. Such new Distributors will be assessed a pro-rata percentage of the fees described above, which is the percentage of the number of trading days remaining in the affected calendar month as of the date on which they have been credentialed to use the applicable market data product in the production environment, divided by the total number of trading days in the affected calendar month.

Specifically, the Exchange proposes to assess Internal Distributors $1,250 per month and External Distributors $1,750 per month for the ToM market data feed. The Exchange proposes to assess Internal Distributors $1,250 per month and External Distributors $1,750 per month for the AIS market data feed. The Exchange proposes to assess Internal Distributors $3,000 per month and External Distributors $3,500 per month for the MOR market data feed. The Exchange notes that its data feed prices are generally lower than other options exchanges' data feed prices for their comparable data feed products.[13]

2. Statutory Basis

The Exchange believes that its proposal to amend its Fee Schedule is consistent with Section 6(b) of the Act [14] in general, and furthers the objectives of Section 6(b)(4) of the Act [15] in particular, in that it is an equitable allocation of reasonable dues, fees and other charges among its members and issuers and other persons using its facilities. The Exchange also believes the proposal furthers the objectives of Section 6(b)(5) of the Act in that it is designed to promote just and equitable principles of trade, to remove impediments to and perfect the mechanism of a free and open market and a national market system, and, in general to protect investors and the public interest and is not designed to permit unfair discrimination between customers, issuers, brokers and dealers.

The Exchange believes that its proposal to adopt market data fees is reasonable in several respects. First, the Exchange is subject to significant competitive forces in the market for options transaction and non-transaction services that constrain its pricing determinations in that market. The Commission has repeatedly expressed its preference for competition over regulatory intervention in determining prices, products, and services in the securities markets. In Regulation NMS, the Commission highlighted the importance of market forces in determining prices and SRO revenues and, also, recognized that current regulation of the market system ''has been remarkably successful in promoting market competition in its broader forms that are most important to investors and listed companies.'' [16]

Numerous indicia demonstrate the competitive nature of this market. For example, clear substitutes to the Exchange exist in the market for options transaction services. The Exchange is one of several options venues to which market participants may direct their order flow, and it represents a small

[9] *See* SR–EMERALD–2020–10 (the ''First Proposed Rule Change'').

[10] *See* Securities Exchange Act Release No. 85207 (February 27, 2019), 84 FR 7963 (March 5, 2019) (SR–EMERALD–2019–09) (Notice of Filing and Immediate Effectiveness of a Proposed Rule Change to Establish MIAX Emerald Top of Market (''ToM'') Data Feed, MIAX Emerald Complex Top of Market (''cToM'') Data Feed, MIAX Emerald Administrative Information Subscriber (''AIS'') Data Feed, and MIAX Emerald Order Feed (''MOR'')).

[11] cToM provides subscribers with the same information as the ToM market data product as it relates to the strategy book, *i.e.,* the Exchange's best bid and offer for a complex strategy, with aggregate size, based on displayable order and quoting interest in the complex strategy on the Exchange. cToM also provides subscribers with the identification of the complex strategies currently trading on MIAX Emerald; complex strategy last sale information; and the status of securities underlying the complex strategy (*e.g.,* halted, open, or resumed). cToM is distinct from ToM, and anyone wishing to receive cToM data must subscribe to cToM regardless of whether they are a current ToM subscriber. ToM subscribers are not required to subscribe to cToM, and cToM subscribers are not required to subscribe to ToM. *See id.*

[12] The term ''Priority Customer'' means a person or entity that (i) is not a broker or dealer in securities, and (ii) does not place more than 390 orders in listed options per day on average during a calendar month for its own beneficial account(s). The number of orders shall be counted in accordance with Interpretation and Policy .01 to Exchange Rule 100. *See* Exchange Rule 100.

[13] *See* Nasdaq PHLX LLC Pricing Schedule, Options 7, Section 10, Proprietary Data Feed Fees; Cboe BZX Exchange, Inc. Fee Schedule, Market Data Fees; Cboe Data Services, LLC, Fee Schedule.

[14] 15 U.S.C. 78f(b).

[15] 15 U.S.C. 78f(b)(4) and (5).

[16] *See* Securities Exchange Act Release No. 51808 (June 9, 2005), 70 FR 37496 (June 29, 2005).

percentage of the overall market. Within this environment, market participants can freely and often do shift their order flow among the Exchange and competing venues in response to changes in their respective pricing schedules. There are currently 16 registered options exchanges competing for order flow. Based on publicly-available information, and excluding index-based options, no single exchange has more than approximately 16% of the market share of executed volume of multiply-listed equity and exchange-traded fund (''ETF'') options.[17] Therefore, no exchange possesses significant pricing power. More specifically, for the month of August 2020, the Exchange had a market share of approximately 3.24% of executed multiply-listed equity options.[18] Additionally, the Exchange notes that it does not currently list any proprietary or singly-list products. Accordingly, there are no products listed on the Exchange for which the Exchange is the sole source of market data. Thus, it is a business decision whether firms decide to purchase the Exchange's market data feeds, as the Exchange only offers trading in multiply-listed options.

The Exchange also believes that the ever-shifting market share among the exchanges from month to month demonstrates that market participants can discontinue or reduce use of certain categories of products, or shift order flow, in response to non-transaction and transaction fee changes. For example, on February 28, 2019, the Exchange's affiliate, MIAX PEARL, LLC (''MIAX PEARL'') filed with the Commission a proposal to increase Taker fees in certain Tiers for options transactions in certain Penny classes for Priority Customers and decrease Maker rebates in certain Tiers for options transactions in Penny classes for Priority Customers (which fee was to be effective March 1, 2019).[19] MIAX PEARL experienced a decrease in total market share for the month of March 2019, after the proposal went into effect. Accordingly, the Exchange believes that the MIAX PEARL March 1, 2019 fee change, to increase certain transaction fees and decrease certain transaction rebates, may have contributed to the decrease in MIAX PEARL's market share and, as such, the Exchange believes competitive forces constrain the Exchange's, and other options exchanges, ability to set transaction fees and market participants can shift order flow based on fee changes instituted by the exchanges.

Further, the Exchange no longer believes it is necessary to waive its market data fees to attract market participants to the MIAX Emerald market since this market is now established and MIAX Emerald no longer needs to rely on such waivers to attract market participants. The Exchange believes that the proposed change is equitable and not unfairly discriminatory because the elimination of the fee waiver for market data fees will uniformly apply to all market participants and market participants are not required to purchase any market data feed from the Exchange. As described above, the Exchange does not offer trading in any proprietary or singly-list options products. Accordingly, the Exchange is not the sole source of market data for any products listed on the Exchange. Therefore, it is a business decision as to whether a firm purchases the Exchange's market data feeds. Additionally, the Exchange believes its proposal to establish market data fees is reasonable and well within the range of fees assessed among other exchanges, including the Exchange's affiliate, MIAX.[20]

The Exchange believes that it is reasonable, equitable and not unfairly discriminatory to assess internal distributors fees that are less than the fees assessed for external distributors for subscriptions to the Exchange's ToM, AIS and MOR data feeds because internal distributors have limited, restricted usage rights to the market data, as compared to external distributors which have more expansive usage rights. All Members and non-Members that determine to receive any market data feed of the Exchange (or its affiliates, MIAX and MIAX PEARL), must first execute, among other things, the MIAX Exchange Group Exchange Data Agreement (the ''Exchange Data Agreement'').[21] Pursuant to the Exchange Data Agreement, internal distributors are restricted to the ''internal use'' of any market data they receive. This means that internal distributors may only distribute the Exchange's market data to the recipient's officers and employees and its affiliates.[22] External distributors may distribute the Exchange's market data to persons who are not officers, employees or affiliates of the external distributor,[23] and may charge their own fees for the distribution of such market data. Accordingly, the Exchange believes it is fair, reasonable and not unfairly discriminatory to assess external distributors a higher fee for the Exchange's market data products as external distributors have greater usage rights to commercialize such market data. The Exchange believes the proposed fees are a reasonable allocation of its costs and expenses among its Members and other persons using its facilities since it is recovering the costs associated with distributing such data. Access to the Exchange is provided on fair and non-discriminatory terms. The Exchange believes the proposed fees are equitable and not unfairly discriminatory because the fee level results in a reasonable and equitable allocation of fees amongst users for similar services. Moreover, the decision as to whether or not to purchase market data is entirely optional to all users. Potential purchasers are not required to purchase the market data, and the Exchange is not required to make the market data available. Purchasers may request the data at any time or may decline to purchase such data. The allocation of fees among users is fair and reasonable because, if the market deems the proposed fees to be unfair or inequitable, firms can diminish or discontinue their use of this data.

In adopting Regulation NMS, the Commission granted self-regulatory organizations and broker-dealers increased authority and flexibility to offer new and unique market data to the public. It was believed that this authority would expand the amount of data available to consumers, and also spur innovation and competition for the provision of market data:

> [E]fficiency is promoted when broker-dealers who do not need the data beyond the prices, sizes, market center identifications of the NBBO and consolidated last sale information are not required to receive (and pay for) such data when broker-dealers may choose to receive (and pay for) additional market data based on their own internal analysis of the need for such data.[24]

By removing ''unnecessary regulatory restrictions'' on the ability of exchanges to sell their own data, Regulation NMS advanced the goals of the Act and the principles reflected in its legislative history. If the free market should

[17] The Options Clearing Corporation (''OCC'') publishes options and futures volume in a variety of formats, including daily and monthly volume by exchange, available here: *https://www.theocc.com/market-data/volume/default.jsp.*

[18] *See id.*

[19] *See* Securities Exchange Act Release No. 85304 (March 13, 2019), 84 FR 10144 (March 19, 2019) (SR–PEARL–2019–07).

[20] *See* the MIAX Options Fee Schedule.

[21] *See* Exchange Data Agreement, available at *https://miaxweb2.pairsite.com/sites/default/files/page-files/MIAX_Exchange_Group_Data_Agreement_09032020.pdf.*

[22] *See id.*

[23] *See id.*

[24] *See* Securities Exchange Act Release No. 51808 (June 9, 2005), 70 FR 37496 (June 29, 2005).

determine whether proprietary data is sold to broker-dealers at all, it follows that the price at which such data is sold should be set by the market as well.

In July, 2010, Congress adopted H.R. 4173, the Dodd-Frank Wall Street Reform and Consumer Protection Act of 2010 (''Dodd-Frank Act''), which amended Section 19 of the Act. Among other things, Section 916 of the Dodd-Frank Act amended paragraph (A) of Section 19(b)(3) of the Act by inserting the phrase ''on any person, whether or not the person is a member of the self-regulatory organization'' after ''due, fee or other charge imposed by the self-regulatory organization.'' As a result, all SRO rule proposals establishing or changing dues, fees or other charges are immediately effective upon filing regardless of whether such dues, fees or other charges are imposed on members of the SRO, non-members, or both. Section 916 further amended paragraph (C) of Section 19(b)(3) of the Act to read, in pertinent part, ''At any time within the 60-day period beginning on the date of filing of such a proposed rule change in accordance with the provisions of paragraph (1) [of Section 19(b)], the Commission summarily may temporarily suspend the change in the rules of the self-regulatory organization made thereby, if it appears to the Commission that such action is necessary or appropriate in the public interest, for the protection of investors, or otherwise in furtherance of the purposes of this title. If the Commission takes such action, the Commission shall institute proceedings under paragraph (2)(B) [of Section 19(b)] to determine whether the proposed rule should be approved or disapproved.''

The Exchange believes that these amendments to Section 19 of the Act reflect Congress's intent to allow the Commission to rely upon the forces of competition to ensure that fees for market data are reasonable and equitably allocated. Although Section 19(b) had formerly authorized immediate effectiveness for a ''due, fee or other charge imposed by the self-regulatory organization,'' the Commission adopted a policy and subsequently a rule stating that fees for data and other products available to persons that are not members of the self-regulatory organization must be approved by the Commission after first being published for comment. At the time, the Commission supported the adoption of the policy and the rule by pointing out that unlike members, whose representation in self-regulatory organization governance was mandated by the Act, non-members should be given the opportunity to comment on fees before being required to pay them, and that the Commission should specifically approve all such fees. The Exchange believes that the amendment to Section 19 reflects Congress's conclusion that the evolution of self-regulatory organization governance and competitive market structure have rendered the Commission's prior policy on non-member fees obsolete. Specifically, many exchanges have evolved from member-owned, not-for-profit corporations into for-profit, investor-owned corporations (or subsidiaries of investor-owned corporations). Accordingly, exchanges no longer have narrow incentives to manage their affairs for the exclusive benefit of their members, but rather have incentives to maximize the appeal of their products to all customers, whether members or non-members, so as to broaden distribution and grow revenues. Moreover, the Exchange believes that the change also reflects an endorsement of the Commission's determinations that reliance on competitive markets is an appropriate means to ensure equitable and reasonable prices. Simply put, the change reflects a presumption that all fee changes should be permitted to take effect immediately, since the level of all fees are constrained by competitive forces.

Selling proprietary market data is a means by which exchanges compete to attract business. To the extent that exchanges are successful in such competition, they earn trading revenues and also enhance the value of their data products by increasing the amount of data they provide. The need to compete for business places substantial pressure upon exchanges to keep their fees for both executions and data reasonable.[25] The Exchange therefore believes that the fees for market data are properly assessed on Members and Non-Member users.

The decision of the United States Court of Appeals for the District of Columbia Circuit in *NetCoalition* v. *SEC,* No. 09–1042 (D.C. Cir. 2010), although reviewing a Commission decision made prior to the effective date of the Dodd-Frank Act, upheld the Commission's reliance upon competitive markets to set reasonable and equitably allocated fees for market data:

> In fact, the legislative history indicates that the Congress intended that the market system 'evolve through the interplay of competitive forces as unnecessary regulatory restrictions are removed' and that the SEC wield its regulatory power 'in those situations where competition may not be sufficient,' such as in the creation of a 'consolidated transactional reporting system.' '' [26]

The court's conclusions about Congressional intent are therefore reinforced by the Dodd-Frank Act amendments, which create a presumption that exchange fees, including market data fees, may take effect immediately, without prior Commission approval, and that the Commission should take action to suspend a fee change and institute a proceeding to determine whether the fee change should be approved or disapproved only where the Commission has concerns that the change may not be consistent with the Act.

The Exchange notes that it operates in a highly competitive market in which market participants can readily favor competing venues if they deem fee levels at a particular venue to be excessive. In such an environment, the Exchange must continually adjust its fees for services and products, in addition to order flow, to remain competitive with other exchanges. The Exchange believes that the proposed changes reflect this competitive environment.

B. Self-Regulatory Organization's Statement on Burden on Competition

The Exchange does not believe that the proposed rule change will impose any burden on competition not necessary or appropriate in furtherance of the purposes of the Act.

Intra-Market Competition

The Exchange does not believe that the proposed rule change would place certain market participants at the Exchange at a relative disadvantage compared to other market participants or affect the ability of such market participants to compete. Unilateral action by the Exchange in the assessment of certain non-transaction fees for services provided to its Members and others using its facilities will not have an impact on competition. As a more recent entrant in the already highly competitive environment for equity options trading, the Exchange does not have the market power necessary to set prices for services that are unreasonable or unfairly discriminatory in violation of the Act. The Exchange's proposed market data

[25] *See* Sec. Indus. Fin. Mkts. Ass'n (SIFMA), Initial Decision Release No. 1015, 2016 SEC LEXIS 2278 (ALJ June 1, 2016) (finding the existence of vigorous competition with respect to non-core market data).

[26] *NetCoalition,* at 15 (quoting H.R. Rep. No. 94–229, at 92 (1975), as reprinted in 1975 U.S.C.C.A.N. 321, 323).

fee levels, as described herein, are comparable to fee levels charged by other options exchanges for the same or similar services, including those fees assessed by the Exchange's affiliate, MIAX.[27]

The Exchange believes that the proposed market data fees do not place certain market participants at a relative disadvantage to other market participants because the fees do not apply unequally to different size market participants, but instead would allow the Exchange charge for the time and resource necessary for providing market data to the market participants that request such data. Accordingly, the Exchange believes that the proposed market data fees do not favor certain categories of market participants in a manner that would impose a burden on competition.

Inter-Market Competition

The Exchange believes the proposed market data fees do not place an undue burden on competition on other SROs that is not necessary or appropriate. The Exchange operates in a highly competitive market in which market participants can readily favor one of the 16 competing options venues if they deem fee levels at a particular venue to be excessive. Based on publicly-available information, and excluding index-based options, no single exchange has more than 16% market share.[28] Therefore, no exchange possesses significant pricing power in the execution of multiply-listed equity and ETF options order flow. For the month of August 2020, the Exchange had a market share of approximately 3.24% of executed multiply-listed equity options,[29] and the Exchange believes that the ever-shifting market share among exchanges from month to month demonstrates that market participants can discontinue or reduce use of certain categories of products, or shift order flow, in response to fee changes. In such an environment, the Exchange must continually adjust its fees and fee waivers to remain competitive with other exchanges and to attract order flow to the Exchange.

C. Self-Regulatory Organization's Statement on Comments on the Proposed Rule Change Received From Members, Participants, or Others

Written comments were neither solicited nor received.

[27] *See* the MIAX Options Fee Schedule.

[28] *See supra* note 17.

[29] *Id.*

III. Date of Effectiveness of the Proposed Rule Change and Timing for Commission Action

The foregoing rule change has become effective pursuant to Section 19(b)(3)(A)(ii) of the Act,[30] and Rule 19b–4(f)(2) [31] thereunder. At any time within 60 days of the filing of the proposed rule change, the Commission summarily may temporarily suspend such rule change if it appears to the Commission that such action is necessary or appropriate in the public interest, for the protection of investors, or otherwise in furtherance of the purposes of the Act. If the Commission takes such action, the Commission shall institute proceedings to determine whether the proposed rule should be approved or disapproved.

IV. Solicitation of Comments

Interested persons are invited to submit written data, views, and arguments concerning the foregoing, including whether the proposed rule change is consistent with the Act. Comments may be submitted by any of the following methods:

Electronic Comments

- Use the Commission's internet comment form (*http://www.sec.gov/rules/sro.shtml*); or
- Send an email to *rule-comments@sec.gov.* Please include File Number SR–EMERALD–2020–13 on the subject line.

Paper Comments

- Send paper comments in triplicate to Secretary, Securities and Exchange Commission, 100 F Street NE, Washington, DC 20549–1090.

All submissions should refer to File Number SR–EMERALD–2020–13. This file number should be included on the subject line if email is used. To help the Commission process and review your comments more efficiently, please use only one method. The Commission will post all comments on the Commission's internet website (*http://www.sec.gov/rules/sro.shtml*). Copies of the submission, all subsequent amendments, all written statements with respect to the proposed rule change that are filed with the Commission, and all written communications relating to the proposed rule change between the Commission and any person, other than those that may be withheld from the public in accordance with the provisions of 5 U.S.C. 552, will be available for website viewing and printing in the Commission's Public Reference Room, 100 F Street NE, Washington, DC 20549, on official business days between the hours of 10:00 a.m. and 3:00 p.m. Copies of the filing also will be available for inspection and copying at the principal office of the Exchange. All comments received will be posted without change. Persons submitting comments are cautioned that we do not redact or edit personal identifying information from comment submissions. You should submit only information that you wish to make available publicly. All submissions should refer to File Number SR–EMERALD–2020–13, and should be submitted on or before November 23, 2020.

For the Commission, by the Division of Trading and Markets, pursuant to delegated authority.[32]

J. Matthew DeLesDernier,

Assistant Secretary.

[FR Doc. 2020–24162 Filed 10–30–20; 8:45 am]

BILLING CODE P

[30] 15 U.S.C. 78s(b)(3)(A)(ii).

[31] 17 CFR 240.19b–4(f)(2).

[32] 17 CFR 200.30–3(a)(12).

SECURITIES AND EXCHANGE COMMISSION

Sunshine Act Meetings

TIME AND DATE: Notice is hereby given, pursuant to the provisions of the Government in the Sunshine Act, Public Law 94–409, the Securities and Exchange Commission will hold an Open Meeting on Wednesday, November 4, 2020 at 2:00 p.m.

PLACE: The meeting will be webcast on the Commission's website at *www.sec.gov.*

STATUS: This meeting will begin at 2:00 p.m. (ET) and will be open to the public via audio webcast only on the Commission's website at *www.sec.gov.*

MATTERS TO BE CONSIDERED:

1. The Commission will consider whether to issue a Notice, pursuant to Exchange Act Rule 0–13, seeking public comment on an application made by a foreign financial regulatory authority, pursuant to Exchange Act Rule 3a71–6, for a substituted compliance determination, and on a proposed order providing for the conditional availability of substituted compliance in connection with the application.

2. The Commission will consider whether to issue an order granting exemptive relief from Sections 8 and 15(a)(1) of the Securities Exchange Act of 1934 and Rules 3b–13(b)(2), 8c–1, 10b–10, 15a–1 and 15c2–1 thereunder in connection with the revision of the definition of ''security'' to encompass

security-based swaps; declining to extend exemptive relief from Rules 10b–16 and 15c2–5; and determining the expiration date for a temporary exemption from Section 29(b) of the Securities Exchange Act of 1934 in connection with registration of security-based swap dealers and major security-based swap participants.

CONTACT PERSON FOR MORE INFORMATION: For further information and to ascertain what, if any, matters have been added, deleted or postponed, please contact Vanessa A. Countryman, Office of the Secretary, at (202) 551–5400.

Dated: October 28, 2020.

Vanessa A. Countryman,

Secretary.

[FR Doc. 2020–24286 Filed 10–29–20; 11:15 am]

BILLING CODE 8011–01–P

SMALL BUSINESS ADMINISTRATION

[Disaster Declaration #16708 and #16709; TEXAS Disaster Number TX–00576]

Administrative Declaration of a Disaster for the State of Texas

AGENCY: U.S. Small Business Administration.

ACTION: Notice.

SUMMARY: This is a notice of an Administrative declaration of a disaster for the State of Texas dated 10/27/2020.

Incident: Rose Hill Apartment Complex Fire.

Incident Period: 08/30/2020.

DATES: Issued on 10/27/2020.

Physical Loan Application Deadline Date: 12/29/2020.

Economic Injury (EIDL) Loan Application Deadline Date: 07/27/2021.

ADDRESSES: Submit completed loan applications to: U.S. Small Business Administration, Processing and Disbursement Center, 14925 Kingsport Road, Fort Worth, TX 76155.

FOR FURTHER INFORMATION CONTACT: A. Escobar, Office of Disaster Assistance, U.S. Small Business Administration, 409 3rd Street SW, Suite 6050, Washington, DC 20416, (202) 205–6734.

SUPPLEMENTARY INFORMATION: Notice is hereby given that as a result of the Administrator's disaster declaration, applications for disaster loans may be filed at the address listed above or other locally announced locations.

The following areas have been determined to be adversely affected by the disaster:

Primary Counties: Denton.

Contiguous Counties:

Texas Collin, Cooke, Dallas, Grayson, Tarrant, Wise.

The Interest Rates are:

	Percent
For Physical Damage:	
Homeowners With Credit Available Elsewhere	2.375
Homeowners Without Credit Available Elsewhere	1.188
Businesses With Credit Available Elsewhere	6.000
Businesses Without Credit Available Elsewhere	3.000
Non-Profit Organizations With Credit Available Elsewhere	2.750
Non-Profit Organizations Without Credit Available Elsewhere	2.750
For Economic Injury:	
Businesses & Small Agricultural Cooperatives Without Credit Available Elsewhere	3.000
Non-Profit Organizations Without Credit Available Elsewhere	2.750

The number assigned to this disaster for physical damage is 16708 5 and for economic injury is 16709 0.

The State which received an EIDL Declaration # is Texas.

(Catalog of Federal Domestic Assistance Number 59008)

Jovita Carranza,

Administrator.

[FR Doc. 2020–24181 Filed 10–30–20; 8:45 am]

BILLING CODE 8026–03–P

SMALL BUSINESS ADMINISTRATION

Annual Meeting of the Regional Small Business Regulatory Fairness Boards

AGENCY: Office of the National Ombudsman, U.S. Small Business Administration (SBA).

ACTION: Notice of open meeting of the Regional Small Business Regulatory Fairness Boards.

SUMMARY: The SBA, Office of the National Ombudsman, is issuing this notice to announce the location, date, time and agenda for the annual board meeting of the ten Regional Small Business Regulatory Fairness Boards. The meeting is open to the public.

DATES: The meeting will be held on Wednesday, November 18, 2020 from 8:30 a.m. to 5:00 p.m. EDT, and Thursday, November 19, 2020 from 8:30 a.m. to 5:00 p.m. EDT.

ADDRESSES: The meeting will be held virtually through Microsoft Teams.

FOR FURTHER INFORMATION CONTACT: The meeting is open to the public; however advance notice of attendance is requested. Anyone wishing to attend must contact Joshua Tovar, Administrative Specialist, by November 3rd, 2020. If you need accommodations because of a disability, translation services, or require additional information, please contact Joshua Tovar, by phone (888) 734–3247, by fax (202) 481–5719 or email *ombudsman@sba.gov.*

For more information on the Office of the National Ombudsman, please visit our website at *www.sba.gov/ombudsman.*

SUPPLEMENTARY INFORMATION: Pursuant to the Small Business Regulatory Enforcement Fairness Act (Pub. L. 104–121), Sec. 222, SBA announces the meeting of the Regional Small Business Regulatory Fairness Boards (Regional Regulatory Fairness Boards). The Regional Regulatory Fairness Boards are tasked to advise the National Ombudsman on matters of concern to small businesses relating to enforcement activities of agencies and to report on substantiated instances of excessive enforcement actions against small business concerns, including any findings or recommendations of the Board as to agency enforcement practice or policy.

The purpose of the meeting is to discuss the following topics related to the Regional Regulatory Fairness Boards:

—Introduction of the Regional Regulatory Fairness Boards and the staff of the Office of the National Ombudsman
—Facilitated discussion of ongoing regulatory issues for small business
—FY2020 Outcomes and comments regarding the Annual Report to Congress
—Office of Advocacy regulatory review
—SBA update and future outreach planning

Dated: October 28, 2020.

Nicole Nelson,

SBA Committee Management Officer.

[FR Doc. 2020–24222 Filed 10–30–20; 8:45 am]

BILLING CODE 8026–03–P

SMALL BUSINESS ADMINISTRATION

[Disaster Declaration #16755 and #16756; UTAH Disaster Number UT–00078]

Administrative Declaration of a Disaster for the State of Utah

AGENCY: U.S. Small Business Administration.

ACTION: Notice.

SUMMARY: This is a notice of an Administrative declaration of a disaster for the State of Utah dated 10/27/2020.

Incident: Severe Storms and Flooding.

Incident Period: 08/23/2020 through 08/24/2020.

DATES: Issued on 10/27/2020.

Physical Loan Application Deadline Date: 12/29/2020.

Economic Injury (EIDL) Loan Application Deadline Date: 07/27/2021.

ADDRESSES: Submit completed loan applications to: U.S. Small Business Administration, Processing and Disbursement Center, 14925 Kingsport Road, Fort Worth, TX 76155.

FOR FURTHER INFORMATION CONTACT: A. Escobar, Office of Disaster Assistance, U.S. Small Business Administration, 409 3rd Street, SW, Suite 6050, Washington, DC 20416, (202) 205–6734.

SUPPLEMENTARY INFORMATION: Notice is hereby given that as a result of the Administrator's disaster declaration, applications for disaster loans may be filed at the address listed above or other locally announced locations.

The following areas have been determined to be adversely affected by the disaster:

Primary Counties: Washington.

Contiguous Counties:

Utah: Iron, Kane.

Arizona: Mohave.

Nevada: Lincoln.

The Interest Rates are:

	Percent
For Physical Damage:	
Homeowners With Credit Available Elsewhere	2.375
Homeowners Without Credit Available Elsewhere	1.188
Businesses With Credit Available Elsewhere	6.000
Businesses Without Credit Available Elsewhere	3.000
Non-Profit Organizations With Credit Available Elsewhere	2.750
Non-Profit Organizations Without Credit Available Elsewhere	2.750
For Economic Injury:	
Businesses & Small Agricultural Cooperatives Without Credit Available Elsewhere	3.000
Non-Profit Organizations Without Credit Available Elsewhere	2.750

The number assigned to this disaster for physical damage is 16755 6 and for economic injury is 16756 0.

The States which received an EIDL Declaration # are Utah, Arizona, Nevada.

(Catalog of Federal Domestic Assistance Number 59008)

Jovita Carranza,

Administrator.

[FR Doc. 2020–24182 Filed 10–30–20; 8:45 am]

BILLING CODE 8026–03–P

DEPARTMENT OF STATE

[Public Notice 11248]

Notice of Public Meeting in Preparation for International Maritime Organization Meeting

The Department of State will conduct a public meeting at 10 a.m. on Thursday, November 19, 2020, by way of teleconference. Members of the public may participate up to the capacity of the teleconference phone line, which will handle 500 participants. To access the teleconference line, participants should call (202) 475–4000 and use Participant Code: 415 533 25#.

The primary purpose of the meeting is to prepare for the 107th session of the International Maritime Organization's (IMO) Legal Committee to be held remotely, November 27 to December 1, 2020.

The agenda items to be considered include:

—Adoption of the agenda

—Report of the Secretary-General on credentials

—Facilitation of the entry into force and harmonized interpretation of the 2010 HNS Protocol

—Provision of financial security in case of abandonment of seafarers, and shipowners' responsibilities in respect of contractual claims for personal injury to, or death of, seafarers in light of the progress of amendments to the ILO Maritime Labour Convention, 2006

—Fair treatment of seafarers in the event of a maritime accident

—Advice and guidance in connection with the implementation of IMO instruments

—Measures to prevent unlawful practices associated with the fraudulent registration and fraudulent registries of ships

—Regulatory scoping exercise and gap analysis of conventions emanating from the Legal Committee with respect to Maritime Autonomous Surface Ships (MASS)

—Unified interpretation on the test for breaking the owner's right to limit liability under the IMO conventions

—Matters relating to the work of the legal Committee and the COVID–19 pandemic

—Piracy

—Work of other IMO bodies

—Technical cooperation activities related to maritime legislation

—Review of the status of conventions and other treaty instruments emanating from the Legal Committee

—Work programme

—Election of officers

—Any other business

—Consideration of the report of the Committee on its 107th session

Please note: IMO's Legal Committee may, on short notice, adjust the LEG 107 agenda to accommodate the constraints associated with the virtual meeting format. Those who RSVP will be notified of any agenda changes that the coordinator is aware of.

Those who plan to participate may contact the meeting coordinator, LT Jessica Anderson, by email at *Jessica.P.Anderson@uscg.mil,* by phone at (202) 372–1376, or in writing at 2703 Martin Luther King Jr. Ave. SE Stop 7509, Washington DC 20593–7509.

Additional information regarding this and other IMO public meetings may be found at: *https://www.dco.uscg.mil/IMO.*

Jeremy M. Greenwood,

Coast Guard Liaison Officer, Office of Ocean and Polar Affairs, Department of State.

[FR Doc. 2020–24213 Filed 10–30–20; 8:45 am]

BILLING CODE 4710–09–P

DEPARTMENT OF STATE

[Public Notice 11247]

Request for Statements of Interest

AGENCY: Department of State.

ACTION: Solicitation of applications.

SUMMARY: The Department of State announces a request for statements of interest (RSI) from qualified entities interested in seeking the Department's designation as an Accrediting Entity (AE) to accredit and approve U.S. agencies and persons that seek to provide adoption services in intercountry adoption cases. The RSI is posted on the website of the Office of Children's Issues, Bureau of Consular Affairs, U.S. Department State at *adoption.state.gov.*

DATES: The RSI will be open from November 1, 2020 through February 1, 2021 at 5 p.m. EDT. Extended time to submit a statement of interest may be considered upon request to the Department.

ADDRESSES: Consult the RSI posted on *adoption.state.gov* for instructions on where to submit statements of interest and supporting documents.

FOR FURTHER INFORMATION CONTACT: Questions may be submitted to *Adoption@state.gov.*

SUPPLEMENTARY INFORMATION: The Intercountry Adoption Act of 2000 (Pub. L. 106–279; 114 Stat. 825; 42 U.S.C. 14901 *et seq.*) designates the

Department of State as the U.S. Central Authority for the 1993 Hague Convention on Protection of Children and Co-operation in Respect of Intercountry Adoption (Senate Treaty Doc. 105–51, 105th Cong., 2d Sess.). Some Central Authority duties are explicitly assigned to other entities, including the Department of Homeland Security (DHS). The IAA confers on the Department the authority and responsibility for establishing and overseeing the system for accreditation/approval and monitoring and oversight of accredited agencies and approved persons (hereinafter referred to as adoption service providers (ASPs)). Rather than mandating the Department to directly accredit/approve ASPs, the IAA directs the Department to select and designate one or more AEs to carry out those functions.

Designated AEs responsibilities are discussed in 22 CFR 96.7 and may be further established by agreement with the Department of State. The federal regulations governing intercountry adoption and the accreditation of agencies and approval of persons can be found at 22 CFR 96, with Subpart B focusing on the selection, designation, and duties of AEs.

This opportunity is extended to nonprofit organizations with expertise in developing and administering standards for entities providing child welfare services and to U.S. State or local government public entities with such expertise and responsibility for licensing adoption agencies, per 22 CFR 96.5. If selected, a State or local government public entity may only accredit/approve agencies and persons within the public entity's State. Federal government entities are not eligible to apply. Newly established nonprofit organizations may apply provided they meet the criteria for IRS Code 501(c)(3) status and can demonstrate that they have the required expertise, as discussed in 22 CFR 96.5, either as an entity or within their staffing.

Under 22 CFR 96.4, the Department is authorized to designate one or more entities to perform AE functions. The Department currently works with one designated AE that is responsible for accreditation/approval of agencies and persons throughout the United States. The number of AEs selected through the upcoming RSI process will depend on the qualifications of the applicants and the Department's determination regarding the best interests of the accreditation/approval program.

P. Matthew Gillen,

Chief, Adoptions Bilateral Engagement, Office of Children's Issues, Bureau of Consular Affairs, Department of State.

[FR Doc. 2020–24211 Filed 10–30–20; 8:45 am]

BILLING CODE 4710–06–P

DEPARTMENT OF STATE

[Public Notice: 11234]

Overseas Security Advisory Council (OSAC) Renewal

The Department of State has renewed the Charter of the Overseas Security Advisory Council. This federal advisory committee will continue to interact on overseas security matters of mutual interest between the U.S. Government and the American private sector. The Council's initiatives and security publications provide a unique contribution to protecting American private sector interests abroad. The Under Secretary for Management determined that renewal of the Charter is necessary and in the public interest.

The Council consists of representatives from three (3) U.S. Government agencies and thirty-one (31) American private sector companies and organizations. The Council follows the procedures prescribed by the Federal Advisory Committee Act (FACA) (Pub. L. 92–463). Meetings will be open to the public unless a determination is made in accordance with Section 10(d) of the FACA and 5 U.S.C. 552b, that a meeting or a portion of the meeting should be closed to the public. Notice of each meeting will be provided in the **Federal Register** at least 15 days prior to the meeting.

For more information contact Marsha Thurman, Overseas Security Advisory Council, Bureau of Diplomatic Security, U.S. Department of State, Washington, DC 20522–2008, phone: 571–345–2214.

Jason R. Kight,

Executive Director, Overseas Security Advisory Council, Department of State.

[FR Doc. 2020–24209 Filed 10–30–20; 8:45 am]

BILLING CODE 4710–43–P

DEPARTMENT OF TRANSPORTATION

Federal Motor Carrier Safety Administration

[Docket No. FMCSA–2000–7006; FMCSA–2002–11714; FMCSA–2002–12294; FMCSA–2004–17984; FMCSA–2004–18885; FMCSA–2005–21711; FMCSA–2005–22727; FMCSA–2006–24783; FMCSA–2008–0021; FMCSA–2008–0106; FMCSA–2008–0231; FMCSA–2008–0266; FMCSA–2010–0082; FMCSA–2010–0114; FMCSA–2010–0161; FMCSA–2010–0187; FMCSA–2011–0380; FMCSA–2012–0104; FMCSA–2012–0159; FMCSA–2012–0215; FMCSA–2013–0167; FMCSA–2013–0174; FMCSA–2014–0002; FMCSA–2014–0004; FMCSA–2014–0006; FMCSA–2014–0007; FMCSA–2014–0010; FMCSA–2014–0011; FMCSA–2014–0296; FMCSA–2015–0070; FMCSA–2015–0345; FMCSA–2015–0347; FMCSA–2015–0350; FMCSA–2016–0024; FMCSA–2016–0028; FMCSA–2016–0029; FMCSA–2016–0206; FMCSA–2018–0008; FMCSA–2018–0011; FMCSA–2018–0012; FMCSA–2018–0017]

Qualification of Drivers; Exemption Applications; Vision

AGENCY: Federal Motor Carrier Safety Administration (FMCSA), DOT.

ACTION: Notice of final disposition.

SUMMARY: FMCSA announces its decision to renew exemptions for 55 individuals from the vision requirement in the Federal Motor Carrier Safety Regulations (FMCSRs) for interstate commercial motor vehicle (CMV) drivers. The exemptions enable these individuals to continue to operate CMVs in interstate commerce without meeting the vision requirement in one eye.

DATES: Each group of renewed exemptions were applicable on the dates stated in the discussions below and will expire on the dates provided below.

FOR FURTHER INFORMATION CONTACT: Ms. Christine A. Hydock, Chief, Medical Programs Division, (202) 366–4001, *fmcsamedical@dot.gov,* FMCSA, Department of Transportation, 1200 New Jersey Avenue SE, Room W64–224, Washington, DC 20590–0001. Office hours are from 8:30 a.m. to 5 p.m., ET, Monday through Friday, except Federal holidays. If you have questions regarding viewing or submitting material to the docket, contact Dockets Operations, (202) 366–9826.

SUPPLEMENTARY INFORMATION:

I. Public Participation

A. Viewing Documents and Comments

To view comments, as well as any documents mentioned in this notice as being available in the docket, go to *http://www.regulations.gov.* Insert the docket number, FMCSA–2000–7006;

FMCSA–2002–11714; FMCSA–2002–12294; FMCSA–2004–17984; FMCSA–2004–18885; FMCSA–2005–21711; FMCSA–2005–22727; FMCSA–2006–24783; FMCSA–2008–0021; FMCSA–2008–0106; FMCSA–2008–0231; FMCSA–2008–0266; FMCSA–2010–0082; FMCSA–2010–0114; FMCSA–2010–0161; FMCSA–2010–0187; FMCSA–2011–0380; FMCSA–2012–0104; FMCSA–2012–0159; FMCSA–2012–0215; FMCSA–2013–0167; FMCSA–2013–0174; FMCSA–2014–0002; FMCSA–2014–0004; FMCSA–2014–0006; FMCSA–2014–0007; FMCSA–2014–0010; FMCSA–2014–0011; FMCSA–2014–0296; FMCSA–2015–0070; FMCSA–2015–0345; FMCSA–2015–0347; FMCSA–2015–0350; FMCSA–2016–0024; FMCSA–2016–0028; FMCSA–2016–0029; FMCSA–2016–0206; FMCSA–2018–0008; FMCSA–2018–0011; FMCSA–2018–0012; FMCSA–2018–0017, in the keyword box, and click ''Search.'' Next, click the ''Open Docket Folder'' button and choose the document to review. If you do not have access to the internet, you may view the docket online by visiting Dockets Operations in Room W12–140 on the ground floor of the DOT West Building, 1200 New Jersey Avenue SE, Washington, DC 20590, between 9 a.m. and 5 p.m., ET, Monday through Friday, except Federal holidays.

B. Privacy Act

In accordance with 5 U.S.C. 553(c), DOT solicits comments from the public to better inform its rulemaking process. DOT posts these comments, without edit, including any personal information the commenter provides, to *www.regulations.gov,* as described in the system of records notice (DOT/ALL–14 FDMS), which can be reviewed at *www.transportation.gov/privacy.*

II. Background

On September 2, 2020, FMCSA published a notice announcing its decision to renew exemptions for 55 individuals from the vision requirement in 49 CFR 391.41(b)(10) to operate a CMV in interstate commerce and requested comments from the public (85 FR 54628). The public comment period ended on October 2, 2020, and no comments were received.

FMCSA has evaluated the eligibility of these applicants and determined that renewing these exemptions would achieve a level of safety equivalent to, or greater than, the level that would be achieved by complying with the current regulation § 391.41(b)(10).

The physical qualification standard for drivers regarding vision found in § 391.41(b)(10) states that a person is physically qualified to drive a CMV if that person has distant visual acuity of at least 20/40 (Snellen) in each eye without corrective lenses or visual acuity separately corrected to 20/40 (Snellen) or better with corrective lenses, distant binocular acuity of a least 20/40 (Snellen) in both eyes with or without corrective lenses, field of vision of at least 70° in the horizontal meridian in each eye, and the ability to recognize the colors of traffic signals and devices showing red, green, and amber.

III. Discussion of Comments

FMCSA received no comments in this proceeding.

IV. Conclusion

Based on its evaluation of the 55 renewal exemption applications and comments received, FMCSA confirms its decision to exempt the following drivers from the vision requirement in § 391.41(b)(10).

As of October 1, 2020, and in accordance with 49 U.S.C. 31136(e) and 31315, the following 37 individuals have satisfied the renewal conditions for obtaining an exemption from the vision requirement in the FMCSRs for interstate CMV drivers (65 FR 20245; 65 FR 57230; 67 FR 46016; 67 FR 57266; 67 FR 57267; 69 FR 51346; 69 FR 52741; 70 FR 71884; 71 FR 4632; 71 FR 53489; 73 FR 5259; 73 FR 15567; 73 FR 27015; 73 FR 35195; 73 FR 35199; 73 FR 48275; 73 FR 51336; 75 FR 1451; 75 FR 19674; 75 FR 25918; 75 FR 34212; 75 FR 39729; 75 FR 44051; 75 FR 47888; 75 FR 52062; 77 FR 545; 77 FR 23797; 77 FR 27847; 77 FR 36336; 77 FR 36338; 77 FR 38386; 77 FR 40945; 77 FR 46153; 77 FR 46795; 77 FR 52389; 78 FR 64271; 78 FR 78475; 79 FR 1908; 79 FR 2748; 79 FR 10606; 79 FR 14333; 79 FR 18392; 79 FR 22003; 79 FR 23797; 79 FR 29498; 79 FR 35212; 79 FR 35220; 79 FR 38659; 79 FR 38661; 79 FR 45868; 79 FR 46153; 79 FR 46300; 79 FR 47175; 79 FR 51643; 79 FR 53514; 79 FR 64001; 80 FR 67476; 80 FR 79414; 80 FR 80443; 81 FR 1474; 81 FR 14190; 81 FR 15404; 81 FR 2043381; FR 21655; 81 FR 28138; 81 FR 39100; 81 FR 39320; 81 FR 42054; 81 FR 44680; 81 FR 48493; 81 FR 60115; 81 FR 66718; 81 FR 66720; 81 FR 66722; 81 FR 72642; 81 FR 81230; 81 FR 90050; 81 FR 91239; 81 FR 96196; 83 FR 6922; 83 FR 15195; 83 FR 15216; 83 FR 24146; 83 FR 24585; 83 FR 28320; 83 FR 28323; 83 FR 28325; 83 FR 28332; 83 FR 34661; 83 FR 34677; 83 FR 45749; 83 FR 56902):

Dominic A. Berube (MA)
Mark F. Besco (IA)
Lester E. Burnes (NM)
Antonio A. Calixto (MN)
Walter O. Connelly (WA)
Tommy J. Cross, Jr. (TN)
Donald R. Date, Jr. (MD)
Jacob Dehoyos (NM)
David Diamond (IL)
Timothy C. Dotson (MO)
Michael Giagnacova (PA)
Joshua D. Giles (NC)
Esteban G. Gonzalez (TX)
Jimmy G. Hall (NC)
Ricky P. Hastings (TX)
Kevin L. Jones (SC)
Keith A. Kelley (ME)
William J. Krysinski (MN)
Melvin L. Lester (MS)
William L. Martin (OR)
Michael P. Mazza (WA)
Duane A. McCord (IL)
Richard L. Miller (IN)
Philip L. Neff (PA)
Michael Pace (TX)
Aaron L. Paustian (IA)
Markus Perkins (LA)
Kent A. Perry (WY)
Mario A. Quezada (TX)
Carroll G. Quisenberry (KY)
Ruel W. Reed (IA)
Guadalupe Reyes (FL)
Ivan Romero (IL)
Jess C. Sanchez (TX)
Robert Schick (PA)
Michael D. Singleton (IN)
Ricky W. Witt (IA)

The drivers were included in docket numbers FMCSA–2000–7006; FMCSA–2002–12294; FMCSA–2005–22727; FMCSA–2008–0021; FMCSA–2008–0106; FMCSA–2010–0082; FMCSA–2010–0114; FMCSA–2012–0104; FMCSA–2012–0159; FMCSA–2013–0167; FMCSA–2013–0174; FMCSA–2014–0002; FMCSA–2014–0004; FMCSA–2014–0006; FMCSA–2014–0007; FMCSA–2014–0010; FMCSA–2015–0070; FMCSA–2015–0345; FMCSA–2015–0347; FMCSA–2015–0350; FMCSA–2016–0024; FMCSA–2016–0028; FMCSA–2016–0029; FMCSA–2016–0206; FMCSA–2018–0008; FMCSA–2018–0011; FMCSA–2018–0012. Their exemptions were applicable as of October 1, 2020, and will expire on October 1, 2022.

As of October 6, 2020, and in accordance with 49 U.S.C. 31136(e) and 31315, the following six individuals have satisfied the renewal conditions for obtaining an exemption from the vision requirement in the FMCSRs for interstate CMV drivers (67 FR 15662; 67 FR 37907; 69 FR 26206; 70 FR 48797; 70 FR 61493; 71 FR 26602; 71 FR 32183; 71 FR 41310; 73 FR 27018; 73 FR 36955; 75 FR 36778; 75 FR 36779; 75 FR 39725; 75 FR 61833; 77 FR 17109; 77 FR 27845; 77 FR 38384; 77 FR 56262; 79 FR 23797; 79 FR 35218; 79 FR 51642; 81 FR 71173; 83 FR 56902):

John E. Breslin (NV)
Ronald M. Green (OH)

David W. Grooms (IN)
Ralph E. Holmes (MD)
Daniel W. Johnson (NY)
Charles E. Stokes (FL)

The drivers were included in docket number FMCSA–2002–11714; FMCSA–2005–21711; FMCSA–2006–24783; FMCSA–2010–0161; FMCSA–2011–0380. Their exemptions were applicable as of October 6, 2020, and will expire on October 6, 2022.

As of October 11, 2020, and in accordance with 49 U.S.C. 31136(e) and 31315, the following individual has satisfied the renewal conditions for obtaining an exemption from the vision requirement in the FMCSRs for interstate CMV drivers (83 FR 45750; 83 FR 56137):

Thomas J. Knapp (WA)

The driver was included in docket number FMCSA–2018–0017. The exemption was applicable as of October 11, 2020, and will expire on October 11, 2022.

As of October 15, 2020, and in accordance with 49 U.S.C. 31136(e) and 31315, the following two individuals have satisfied the renewal conditions for obtaining an exemption from the vision requirement in the FMCSRs for interstate CMV drivers (69 FR 33997; 69 FR 61292; 71 FR 55820; 73 FR 46973; 73 FR 54888; 73 FR 65009; 75 FR 52063; 75 FR 57105; 77 FR 52388; 77 FR 60010; 81 FR 71173; 83 FR 56902):

William C. Ball (NC) and Kevin C. Palmer (OR)

The drivers were included in docket numbers FMCSA–2004–17984; FMCSA–2008–0231. Their exemptions were applicable as of October 15, 2020, and will expire on October 15, 2022.

As of October 21, 2020, and in accordance with 49 U.S.C. 31136(e) and 31315, the following individual has satisfied the renewal conditions for obtaining an exemption from the vision requirement in the FMCSRs for interstate CMV drivers (79 FR 56099; 79 FR 70928; 81 FR 71173; 83 FR 56902):

Raymond Holt (CA)

The driver was included in docket number FMCSA–2014–0011. The exemption is applicable as of October 21, 2020, and will expire on October 21, 2022.

As of October 22, 2020, and in accordance with 49 U.S.C. 31136(e) and 31315, the following four individuals have satisfied the renewal conditions for obtaining an exemption from the vision requirement in the FMCSRs for interstate CMV drivers (73 FR 51689; 73 FR 63047; 75 FR 39725; 75 FR 47883; 75 FR 61883; 75 FR 63257; 75 FR 64396; 77 FR 64582; 79 FR 56104; 81 FR 71173; 83 FR 56902):

Randall J. Benson (MN)
James D. Drabek, Jr. (IL)
Delone W. Dudley (MD)
Jeromy W. Leatherman (PA)

The drivers were included in docket number FMCSA–2008–0266; FMCSA–2010–0161; FMCSA–2010–0187. Their exemptions are applicable as of October 22, 2020, and will expire on October 22, 2022.

As of October 23, 2020, and in accordance with 49 U.S.C. 31136(e) and 31315, the following individual has satisfied the renewal conditions for obtaining an exemption from the vision requirement in the FMCSRs for interstate CMV drivers (77 FR 52381; 77 FR 64841; 79 FR 56097; 81 FR 71173; 83 FR 56902):

James T. Stalker (OH)

The driver was included in docket number FMCSA–2012–0215. The exemption is applicable as of October 23, 2020, and will expire on October 23, 2022.

As of October 27, 2020, and in accordance with 49 U.S.C. 31136(e) and 31315, the following two individuals have satisfied the renewal conditions for obtaining an exemption from the vision requirement in the FMCSRs for interstate CMV drivers (69 FR 53493; 69 FR 62742; 71 FR 62148; 73 FR 61925; 75 FR 59327; 77 FR 64583; 79 FR 56117; 81 FR 71173; 83 FR 56902):

David W. Brown (TN) and Zbigniew P. Pietranik (WI)

The drivers were included in docket number FMCSA–2004–18885. Their exemptions are applicable as of October 27, 2020, and will expire on October 27, 2022.

As of October 31, 2020, and in accordance with 49 U.S.C. 31136(e) and 31315, the following individual has satisfied the renewal conditions for obtaining an exemption from the vision requirement in the FMCSRs for interstate CMV drivers (79 FR 58856; 79 FR 72754; 81 FR 71173; 83 FR 56902):

Henry L. Chrestensen (IA)

The driver was included in docket number FMCSA–2014–0296. The exemption is applicable as of October 31, 2020, and will expire on October 31, 2022.

In accordance with 49 U.S.C. 31315(b), each exemption will be valid for 2 years from the effective date unless revoked earlier by FMCSA. The exemption will be revoked if the following occurs: (1) The person fails to comply with the terms and conditions of the exemption; (2) the exemption has resulted in a lower level of safety than was maintained prior to being granted; or (3) continuation of the exemption would not be consistent with the goals and objectives of 49 U.S.C. 31136(e) and 31315(b).

Larry W. Minor,
Associate Administrator for Policy.

[FR Doc. 2020–24185 Filed 10–30–20; 8:45 am]
BILLING CODE 4910–EX–P

DEPARTMENT OF TRANSPORTATION

Federal Motor Carrier Safety Administration

[Docket No. FMCSA–2014–0106; FMCSA–2016–0002; FMCSA–2017–0061]

Qualification of Drivers; Exemption Applications; Hearing

AGENCY: Federal Motor Carrier Safety Administration (FMCSA), DOT.

ACTION: Notice of final disposition.

SUMMARY: FMCSA announces its decision to renew exemptions for eight individuals from the hearing requirement in the Federal Motor Carrier Safety Regulations (FMCSRs) for interstate commercial motor vehicle (CMV) drivers. The exemptions enable these hard of hearing and deaf individuals to continue to operate CMVs in interstate commerce.

DATES: The exemptions were applicable on September 6, 2020. The exemptions expire on September 6, 2022.

FOR FURTHER INFORMATION CONTACT: Ms. Christine A. Hydock, Chief, Medical Programs Division, 202–366–4001, *fmcsamedical@dot.gov,* FMCSA, Department of Transportation, 1200 New Jersey Avenue SE, Room W64–224, Washington, DC 20590–0001. Office hours are from 8:30 a.m. to 5 p.m., ET, Monday through Friday, except Federal holidays. If you have questions regarding viewing or submitting material to the docket, contact Dockets Operations, (202) 366–9826.

SUPPLEMENTARY INFORMATION:

I. Public Participation

A. Viewing Documents and Comments

To view comments, as well as any documents mentioned in this notice as being available in the docket, go to *http://www.regulations.gov/docket?D=FMCSA-2014-0106, http://www.regulations.gov/docket?D=FMCSA-2016-0002,* or *http://www.regulations.gov/docket?D=FMCSA-2017-0061* and choose the document to review. If you do not have access to the internet, you may view the docket online by visiting Dockets Operations in Room W12–140 on the ground floor of the DOT West Building, 1200 New

Jersey Avenue SE, Washington, DC 20590, between 9 a.m. and 5 p.m., ET, Monday through Friday, except Federal holidays. To be sure someone is there to help you, please call (202) 366–9317 or (202) 366–9826 before visiting Dockets Operations.

B. Privacy Act

In accordance with 5 U.S.C. 553(c), DOT solicits comments from the public to better inform its rulemaking process. DOT posts these comments, without edit, including any personal information the commenter provides, to *www.regulations.gov,* as described in the system of records notice (DOT/ALL–14 FDMS), which can be reviewed at *www.transportation.gov/privacy.*

II. Background

On September 2, 2020, FMCSA published a notice announcing its decision to renew exemptions for eight individuals from the hearing standard in 49 CFR 391.41(b)(11) to operate a CMV in interstate commerce and requested comments from the public (85 FR 54625). The public comment period ended on October 2, 2020, and no comments were received.

FMCSA has evaluated the eligibility of these applicants and determined that renewing these exemptions would achieve a level of safety equivalent to, or greater than, the level that would be achieved by complying with § 391.41(b)(11).

The physical qualification standard for drivers regarding hearing found in § 391.41(b)(11) states that a person is physically qualified to drive a CMV if that person first perceives a forced whispered voice in the better ear at not less than 5 feet with or without the use of a hearing aid or, if tested by use of an audiometric device, does not have an average hearing loss in the better ear greater than 40 decibels at 500 Hz, 1,000 Hz, and 2,000 Hz with or without a hearing aid when the audiometric device is calibrated to American National Standard (formerly ASA Standard) Z24.5—1951.

This standard was adopted in 1970 and was revised in 1971 to allow drivers to be qualified under this standard while wearing a hearing aid, 35 FR 6458, 6463 (April 22, 1970) and 36 FR 12857 (July 3, 1971).

III. Discussion of Comments

FMCSA received no comments in this proceeding.

IV. Conclusion

Based upon its evaluation of the eight renewal exemption applications, FMCSA announces its decision to exempt the following drivers from the hearing requirement in § 391.41(b)(11).

As of September 6, 2020, and in accordance with 49 U.S.C. 31136(e) and 31315(b), the following eight individuals have satisfied the renewal conditions for obtaining an exemption from the hearing requirement in the FMCSRs for interstate CMV drivers (85 FR 54625):

Weston Arthurs (CA)
Mathias Conway (MI)
Charles DePriest (TX)
Agustin Hernandez (TX)
Robert Hilber (TX)
Richard Hoots (AR)
D'Nielle Smith (OH)
Michael Sweet (GA)

The drivers were included in docket number FMCSA–2014–0106, FMCSA–2016–0002, or FMCSA–2017–0061. Their exemptions were applicable as of September 6, 2020, and will expire on September 6, 2022.

In accordance with 49 U.S.C. 31315(b), each exemption will be valid for 2 years from the effective date unless revoked earlier by FMCSA. The exemption will be revoked if the following occurs: (1) The person fails to comply with the terms and conditions of the exemption; (2) the exemption has resulted in a lower level of safety than was maintained prior to being granted; or (3) continuation of the exemption would not be consistent with the goals and objectives of 49 U.S.C. 31136(e) and 31315(b).

Larry W. Minor,

Associate Administrator for Policy.

[FR Doc. 2020–24188 Filed 10–30–20; 8:45 am]

BILLING CODE 4910–EX–P

DEPARTMENT OF TRANSPORTATION

Federal Motor Carrier Safety Administration

[Docket No. FMCSA–2020–0011]

Qualification of Drivers; Exemption Applications; Vision

AGENCY: Federal Motor Carrier Safety Administration (FMCSA), DOT.

ACTION: Notice of final disposition.

SUMMARY: FMCSA announces its decision to exempt five individuals from the vision requirement in the Federal Motor Carrier Safety Regulations (FMCSRs) to operate a commercial motor vehicle (CMV) in interstate commerce. They are unable to meet the vision requirement in one eye for various reasons. The exemptions enable these individuals to operate CMVs in interstate commerce without meeting the vision requirement in one eye.

DATES: The exemptions were applicable on October 3, 2020. The exemptions expire on October 3, 2022.

FOR FURTHER INFORMATION CONTACT: Ms. Christine A. Hydock, Chief, Medical Programs Division, (202) 366–4001, *fmcsamedical@dot.gov,* FMCSA, Department of Transportation, 1200 New Jersey Avenue SE, Room W64–224, Washington, DC 20590–0001. Office hours are from 8:30 a.m. to 5 p.m., ET, Monday through Friday, except Federal holidays. If you have questions regarding viewing or submitting material to the docket, contact Dockets Operations, (202) 366–9826.

SUPPLEMENTARY INFORMATION:

I. Public Participation

A. Viewing Documents and Comments

To view comments, as well as any documents mentioned in this notice as being available in the docket, go to *http://www.regulations.gov/docket?D=FMCSA-2020-0011* and choose the document to review. If you do not have access to the internet, you may view the docket online by visiting Dockets Operations in Room W12–140 on the ground floor of the DOT West Building, 1200 New Jersey Avenue SE, Washington, DC 20590, between 9 a.m. and 5 p.m., ET, Monday through Friday, except Federal holidays. To be sure someone is there to help you, please call (202) 366–9317 or (202) 366–9826 before visiting Docket Operations.

B. Privacy Act

In accordance with 5 U.S.C. 553(c), DOT solicits comments from the public to better inform its rulemaking process. DOT posts these comments, without edit, including any personal information the commenter provides, to *www.regulations.gov,* as described in the system of records notice (DOT/ALL–14 FDMS), which can be reviewed at *www.transportation.gov/privacy.*

II. Background

On September 2, 2020, FMCSA published a notice announcing receipt of applications from five individuals requesting an exemption from the vision requirement in 49 CFR 391.41(b)(10) and requested comments from the public (85 FR 54621). The public comment period ended on October 2, 2020, and no comments were received.

FMCSA has evaluated the eligibility of these applicants and determined that granting the exemptions to these individuals would achieve a level of safety equivalent to, or greater than, the

level that would be achieved by complying with § 391.41(b)(10).

The physical qualification standard for drivers regarding vision found in § 391.41(b)(10) states that a person is physically qualified to drive a CMV if that person has distant visual acuity of at least 20/40 (Snellen) in each eye without corrective lenses or visual acuity separately corrected to 20/40 (Snellen) or better with corrective lenses, distant binocular acuity of a least 20/40 (Snellen) in both eyes with or without corrective lenses, field of vision of at least 70° in the horizontal meridian in each eye, and the ability to recognize the colors of traffic signals and devices showing red, green, and amber.

III. Discussion of Comments

FMCSA received no comments in this proceeding.

IV. Basis for Exemption Determination

Under 49 U.S.C. 31136(e) and 31315(b), FMCSA may grant an exemption from the FMCSRs for no longer than a 5-year period if it finds such exemption would likely achieve a level of safety that is equivalent to, or greater than, the level that would be achieved absent such exemption. The statute also allows the Agency to renew exemptions at the end of the 5-year period. FMCSA grants medical exemptions from the FMCSRs for a 2-year period to align with the maximum duration of a driver's medical certification.

The Agency's decision regarding these exemption applications is based on medical reports about the applicants' vision, as well as their driving records and experience driving with the vision deficiency. The qualifications, experience, and medical condition of each applicant were stated and discussed in detail in the September 2, 2020, **Federal Register** notice (85 FR 54621) and will not be repeated here.

FMCSA recognizes that some drivers do not meet the vision requirement but have adapted their driving to accommodate their limitation and demonstrated their ability to drive safely. The five exemption applicants listed in this notice are in this category. They are unable to meet the vision requirement in one eye for various reasons, including amblyopia, chorioretinal scarring, glaucoma, and macular scarring. In most cases, their eye conditions did not develop recently. Three of the applicants were either born with their vision impairments or have had them since childhood. The two individuals that developed their vision conditions as adults have had them for a range of 5 to 14 years. Although each applicant has one eye that does not meet the vision requirement in § 391.41(b)(10), each has at least 20/40 corrected vision in the other eye, and, in a doctor's opinion, has sufficient vision to perform all the tasks necessary to operate a CMV.

Doctors' opinions are supported by the applicants' possession of a valid license to operate a CMV. By meeting State licensing requirements, the applicants demonstrated their ability to operate a CMV with their limited vision in intrastate commerce, even though their vision disqualified them from driving in interstate commerce. We believe that the applicants' intrastate driving experience and history provide an adequate basis for predicting their ability to drive safely in interstate commerce. Intrastate driving, like interstate operations, involves substantial driving on highways on the interstate system and on other roads built to interstate standards. Moreover, driving in congested urban areas exposes the driver to more pedestrian and vehicular traffic than exists on interstate highways. Faster reaction to traffic and traffic signals is generally required because distances between them are more compact. These conditions tax visual capacity and driver response just as intensely as interstate driving conditions.

The applicants in this notice have driven CMVs with their limited vision in careers ranging for 3 to 20 years. In the past 3 years, no drivers were involved in crashes, and no drivers were convicted of moving violations in CMVs. All the applicants achieved a record of safety while driving with their vision impairment that demonstrates the likelihood that they have adapted their driving skills to accommodate their condition. As the applicants' ample driving histories with their vision deficiencies are good predictors of future performance, FMCSA concludes their ability to drive safely can be projected into the future.

Consequently, FMCSA finds that in each case exempting these applicants from the vision requirement in § 391.41(b)(10) is likely to achieve a level of safety equal to that existing without the exemption.

V. Conditions and Requirements

The terms and conditions of the exemption are provided to the applicants in the exemption document and includes the following: (1) Each driver must be physically examined every year (a) by an ophthalmologist or optometrist who attests that the vision in the better eye continues to meet the standard in § 391.41(b)(10) and (b) by a certified medical examiner (ME) who attests that the individual is otherwise physically qualified under § 391.41; (2) each driver must provide a copy of the ophthalmologist's or optometrist's report to the ME at the time of the annual medical examination; and (3) each driver must provide a copy of the annual medical certification to the employer for retention in the driver's qualification file, or keep a copy in his/her driver's qualification file if he/she is self-employed. The driver must also have a copy of the exemption when driving, for presentation to a duly authorized Federal, State, or local enforcement official.

VI. Preemption

During the period the exemption is in effect, no State shall enforce any law or regulation that conflicts with this exemption with respect to a person operating under the exemption.

VII. Conclusion

Based upon its evaluation of the five exemption applications, FMCSA exempts the following drivers from the vision requirement, § 391.41(b)(10), subject to the requirements cited above:

Tanner L. Batey (MT)
Martin G. Burley, Jr. (ID)
Fernando Casillas Lucio (CA)
Franz E. Fehr (TX)
Jonathan D. Steen (MN)

In accordance with 49 U.S.C. 31136(e) and 31315(b), each exemption will be valid for 2 years from the effective date unless revoked earlier by FMCSA. The exemption will be revoked if the following occurs: (1) The person fails to comply with the terms and conditions of the exemption; (2) the exemption has resulted in a lower level of safety than was maintained prior to being granted; or (3) continuation of the exemption would not be consistent with the goals and objectives of 49 U.S.C. 31136(e) and 31315(b).

Larry W. Minor,
Associate Administrator for Policy.

[FR Doc. 2020–24187 Filed 10–30–20; 8:45 am]
BILLING CODE 4910–EX–P

DEPARTMENT OF TRANSPORTATION

Federal Motor Carrier Safety Administration

[Docket No. FMCSA–2020–0012]

Qualification of Drivers; Exemption Applications; Vision

AGENCY: Federal Motor Carrier Safety Administration (FMCSA), DOT.

ACTION: Notice of applications for exemption; request for comments.

SUMMARY: FMCSA announces receipt of applications from five individuals for an exemption from the vision requirement in the Federal Motor Carrier Safety Regulations (FMCSRs) to operate a commercial motor vehicle (CMV) in interstate commerce. If granted, the exemptions will enable these individuals to operate CMVs in interstate commerce without meeting the vision requirement in one eye.

DATES: Comments must be received on or before December 2, 2020.

ADDRESSES: You may submit comments identified by the Federal Docket Management System (FDMS) Docket No. FMCSA–2020–0012 using any of the following methods:

- *Federal eRulemaking Portal:* Go to *http://www.regulations.gov/docket?D=FMCSA-2020-0012.* Follow the online instructions for submitting comments.
- *Mail:* Dockets Operations; U.S. Department of Transportation, 1200 New Jersey Avenue SE, West Building Ground Floor, Room W12–140, Washington, DC 20590–0001.
- *Hand Delivery:* West Building Ground Floor, Room W12–140, 1200 New Jersey Avenue SE, Washington, DC, between 9 a.m. and 5 p.m., ET, Monday through Friday, except Federal Holidays.
- *Fax:* (202) 493–2251.

To avoid duplication, please use only one of these four methods. See the ''Public Participation'' portion of the **SUPPLEMENTARY INFORMATION** section for instructions on submitting comments.

FOR FURTHER INFORMATION CONTACT: Ms. Christine A. Hydock, Chief, Medical Programs Division, (202) 366–4001, *fmcsamedical@dot.gov,* FMCSA, Department of Transportation, 1200 New Jersey Avenue SE, Room W64–224, Washington, DC 20590–0001. Office hours are 8:30 a.m. to 5 p.m., ET, Monday through Friday, except Federal holidays. If you have questions regarding viewing or submitting material to the docket, contact Dockets Operations, (202) 366–9826.

SUPPLEMENTARY INFORMATION:

I. Public Participation

A. Submitting Comments

If you submit a comment, please include the docket number for this notice (Docket No. FMCSA–2020–0012), indicate the specific section of this document to which each comment applies, and provide a reason for each suggestion or recommendation. You may submit your comments and material online or by fax, mail, or hand delivery, but please use only one of these means. FMCSA recommends that you include your name and a mailing address, an email address, or a phone number in the body of your document so that FMCSA can contact you if there are questions regarding your submission.

To submit your comment online, go to *http://www.regulations.gov/docket?D=FMCSA-2020-0012.* Click on the ''Comment Now!'' button and type your comment into the text box on the following screen. Choose whether you are submitting your comment as an individual or on behalf of a third party and then submit.

If you submit your comments by mail or hand delivery, submit them in an unbound format, no larger than 8½ by 11 inches, suitable for copying and electronic filing. If you submit comments by mail and would like to know that they reached the facility, please enclose a stamped, self-addressed postcard or envelope.

FMCSA will consider all comments and material received during the comment period.

B. Viewing Documents and Comments

To view comments, as well as any documents mentioned in this notice as being available in the docket, go to *http://www.regulations.gov/docket?D=FMCSA-2020-0012* and choose the document to review. If you do not have access to the internet, you may view the docket online by visiting the Dockets Operations in Room W12–140 on the ground floor of the DOT West Building, 1200 New Jersey Avenue SE, Washington, DC 20590, between 9 a.m. and 5 p.m., ET, Monday through Friday, except Federal holidays. To be sure someone is there to help you, please call (202) 366–9317 or (202) 366–9826 before visiting Dockets Operations.

C. Privacy Act

In accordance with 5 U.S.C. 553(c), DOT solicits comments from the public to better inform its rulemaking process. DOT posts these comments, without edit, including any personal information the commenter provides, to *www.regulations.gov,* as described in the system of records notice (DOT/ALL–14 FDMS), which can be reviewed at *www.transportation.gov/privacy.*

II. Background

Under 49 U.S.C. 31136(e) and 31315(b), FMCSA may grant an exemption from the FMCSRs for no longer than a 5-year period if it finds such exemption would likely achieve a level of safety that is equivalent to, or greater than, the level that would be achieved absent such exemption. The statute also allows the Agency to renew exemptions at the end of the 5-year period. FMCSA grants medical exemptions from the FMCSRs for a 2-year period to align with the maximum duration of a driver's medical certification.

The five individuals listed in this notice have requested an exemption from the vision requirement in 49 CFR 391.41(b)(10). Accordingly, the Agency will evaluate the qualifications of each applicant to determine whether granting an exemption will achieve the required level of safety mandated by statute.

The physical qualification standard for drivers regarding vision found in § 391.41(b)(10) states that a person is physically qualified to drive a CMV if that person has distant visual acuity of at least 20/40 (Snellen) in each eye without corrective lenses or visual acuity separately corrected to 20/40 (Snellen) or better with corrective lenses, distant binocular acuity of at least 20/40 (Snellen) in both eyes with or without corrective lenses, field of vision of at least 70° in the horizontal Meridian in each eye, and the ability to recognize the colors of traffic signals and devices showing standard red, green, and amber.

On July 16, 1992, the Agency first published the criteria for the Vision Waiver Program, which listed the conditions and reporting standards that CMV drivers approved for participation would need to meet (57 FR 31458). The current Vision Exemption Program was established in 1998, following the enactment of amendments to the statutes governing exemptions made by § 4007 of the Transportation Equity Act for the 21st Century (TEA–21), Public Law 105–178, 112 Stat. 107, 401 (June 9, 1998). Vision exemptions are considered under the procedures established in 49 CFR part 381 subpart C, on a case-by-case basis upon application by CMV drivers who do not meet the vision standards of § 391.41(b)(10).

To qualify for an exemption from the vision requirement, FMCSA requires a person to present verifiable evidence that he/she has driven a commercial vehicle safely in intrastate commerce with the vision deficiency for the past 3 years. Recent driving performance is especially important in evaluating future safety, according to several research studies designed to correlate past and future driving performance. Results of these studies support the principle that the best predictor of future performance by a driver is his/her past record of crashes and traffic

violations. Copies of the studies may be found at *https://www.regulations.gov/docket?D=FMCSA-1998-3637.*

FMCSA believes it can properly apply the principle to monocular drivers, because data from the Federal Highway Administration's (FHWA) former waiver study program clearly demonstrated the driving performance of experienced monocular drivers in the program is better than that of all CMV drivers collectively.[1] The fact that experienced monocular drivers demonstrated safe driving records in the waiver program supports a conclusion that other monocular drivers, meeting the same qualifying conditions as those required by the waiver program, are also likely to have adapted to their vision deficiency and will continue to operate safely.

The first major research correlating past and future performance was done in England by Greenwood and Yule in 1920. Subsequent studies, building on that model, concluded that crash rates for the same individual exposed to certain risks for two different time periods vary only slightly (See Bates and Neyman, University of California Publications in Statistics, April 1952). Other studies demonstrated theories of predicting crash proneness from crash history coupled with other factors. These factors—such as age, sex, geographic location, mileage driven and conviction history—are used every day by insurance companies and motor vehicle bureaus to predict the probability of an individual experiencing future crashes (See Weber, Donald C., ''Accident Rate Potential: An Application of Multiple Regression Analysis of a Poisson Process,'' Journal of American Statistical Association, June 1971). A 1964 California Driver Record Study prepared by the California Department of Motor Vehicles concluded that the best overall crash predictor for both concurrent and nonconcurrent events is the number of single convictions. This study used 3 consecutive years of data, comparing the experiences of drivers in the first 2 years with their experiences in the final year.

III. Qualifications of Applicants

Wesley D. Enkers

Mr. Enkers, 58, has had amblyopia in his left eye since childhood. The visual acuity in his right eye is 20/20, and in his left eye, 20/80. Following an examination in 2020, his optometrist stated, ''In my medical opinion, he has sufficient vision to perform the driving tasks operate a commercial vehicle.'' Mr. Enkers reported that he has driven straight trucks for 36 years, accumulating 162,000 miles. He holds an operator's license from Minnesota. His driving record for the last 3 years shows no crashes and no convictions for moving violations in a CMV.

Michael J. Jewell

Mr. Jewell, 35, has had amblyopia in his left eye since childhood. The visual acuity in his right eye is 20/20 and in his left eye, 20/350. Following an examination in 2020, his optometrist stated, ''It is my medical opinion that Michael has sufficient vision to perform the driving tasks necessary to operate a commercial vehicle while he is wearing glasses or contact lenses.'' Mr. Jewell reported that he has driven straight trucks for 8 years, accumulating 50,000 miles. He holds an operator's license from Colorado. His driving record for the last 3 years shows no crashes and no convictions for moving violations in a CMV.

Anthony G. Offutt

Mr. Offutt, 63, has had optic neuropathy in his left eye since 2012. The visual acuity in his right eye is 20/20, and in his left eye, 20/400. Following an examination in 2020, his optometrist stated, ''Although Mr. Offutt's visual acuity is reduced due to NAION, I believe Mr. Offutt has the ability to operate a commercial vehicle.'' Mr. Offutt reported that he has driven tractor-trailer combinations for 25 years, accumulating 1.1 million miles. He holds a Class A CDL from Oregon. His driving record for the last 3 years shows no crashes and no convictions for moving violations in a CMV.

Joseph Sottile

Mr. Sottile, 57, has chorioretinal scarring in his right eye due to trauma in childhood. The visual acuity in his right eye is hand motion, and in his left eye, 20/20. Following an examination in 2020, his ophthalmologist stated, ''It is my opinion patient has good vision and is capable of operating a commercial vehicle.'' Mr. Sottile reported that he has driven straight trucks for 30 years, accumulating 405,600 miles. He holds an operator's license from Illinois. His driving record for the last 3 years shows no crashes and no convictions for moving violations in a CMV.

Michael Westervelt

Mr. Westervelt, 70, has a prosthetic right eye due to a traumatic incident in 2009. The visual acuity in his right eye is no light perception, and in his left eye, 20/15. Following an examination in 2020, his optometrist stated, ''It is my medical option that Mike Westervelt has sufficient vision to perform the driving tasks required to operate a commercial vehicle.'' Mr. Westervelt reported that he has driven tractor-trailer combinations for 50 years, accumulating 6,300,000 miles. He holds a Class A CDL from Montana. His driving record for the last 3 years shows no crashes and no convictions for moving violations in a CMV.

IV. Request for Comments

In accordance with 49 U.S.C. 31136(e) and 31315(b), FMCSA requests public comment from all interested persons on the exemption petitions described in this notice. We will consider all comments and material received before the close of business on the closing date indicated under the **DATES** section of the notice.

Larry W. Minor,

Associate Administrator for Policy.

[FR Doc. 2020–24186 Filed 10–30–20; 8:45 am]

BILLING CODE 4910–EX–P

DEPARTMENT OF TRANSPORTATION

Federal Motor Carrier Safety Administration

[Docket No. FMCSA–2012–0123; FMCSA–2015–0326; FMCSA–2015–0328; FMCSA–2015–0329; FMCSA–2017–0057; FMCSA–2017–0059; FMCSA–2017–0060; FMCSA–2017–0061]

Qualification of Drivers; Exemption Applications; Hearing

AGENCY: Federal Motor Carrier Safety Administration (FMCSA), DOT.

ACTION: Notice of final disposition.

SUMMARY: FMCSA announces its decision to renew exemptions for 18 individuals from the hearing requirement in the Federal Motor Carrier Safety Regulations (FMCSRs) for interstate commercial motor vehicle (CMV) drivers. The exemptions enable these hard of hearing and deaf individuals to continue to operate CMVs in interstate commerce.

DATES: The exemptions were applicable on August 22, 2020. The exemptions expire on August 22, 2022.

FOR FURTHER INFORMATION CONTACT: Ms. Christine A. Hydock, Chief, Medical Programs Division, 202–366–4001, *fmcsamedical@dot.gov,* FMCSA, Department of Transportation, 1200 New Jersey Avenue SE, Room W64–224, Washington, DC 20590–0001. Office hours are from 8:30 a.m. to 5 p.m., ET,

[1] A thorough discussion of this issue may be found in a FHWA final rule published in the **Federal Register** on March 26, 1996 and available on the internet at *https://www.govinfo.gov/content/pkg/FR-1996-03-26/pdf/96-7226.pdf.*

Monday through Friday, except Federal holidays. If you have questions regarding viewing or submitting material to the docket, contact Dockets Operations, (202) 366–9826.

SUPPLEMENTARY INFORMATION:

I. Public Participation

A. Viewing Documents and Comments

To view comments, as well as any documents mentioned in this notice as being available in the docket, go to *http://www.regulations.gov.* Insert the docket number, FMCSA–2012–0123, FMCSA–2015–0326, FMCSA–2015–0328, FMCSA–2015–0329, FMCSA–2017–0057, FMCSA–2017–0059, FMCSA–2017–0060, or FMCSA–2017–0061, in the keyword box, and click ''Search.'' Next, click the ''Open Docket Folder'' button and choose the document to review. If you do not have access to the internet, you may view the docket online by visiting Dockets Operations in Room W12–140 on the ground floor of the DOT West Building, 1200 New Jersey Avenue SE, Washington, DC 20590, between 9 a.m. and 5 p.m., ET, Monday through Friday, except Federal holidays. To be sure someone is there to help you, please call (202) 366–9317 or (202) 366–9826 before visiting Dockets Operations.

B. Privacy Act

In accordance with 5 U.S.C. 553(c), DOT solicits comments from the public to better inform its rulemaking process. DOT posts these comments, without edit, including any personal information the commenter provides, to *www.regulations.gov,* as described in the system of records notice (DOT/ALL–14 FDMS), which can be reviewed at *www.transportation.gov/privacy.*

II. Background

On September 2, 2020, FMCSA published a notice announcing its decision to renew exemptions for 18 individuals from the hearing standard in 49 CFR 391.41(b)(11) to operate a CMV in interstate commerce and requested comments from the public (85 FR 54626). The public comment period ended on October 2, 2020, and no comments were received.

FMCSA has evaluated the eligibility of these applicants and determined that renewing these exemptions would achieve a level of safety equivalent to, or greater than, the level that would be achieved by complying with § 391.41(b)(11).

The physical qualification standard for drivers regarding hearing found in § 391.41(b)(11) states that a person is physically qualified to drive a CMV if that person first perceives a forced whispered voice in the better ear at not less than 5 feet with or without the use of a hearing aid or, if tested by use of an audiometric device, does not have an average hearing loss in the better ear greater than 40 decibels at 500 Hz, 1,000 Hz, and 2,000 Hz with or without a hearing aid when the audiometric device is calibrated to American National Standard (formerly ASA Standard) Z24.5—1951.

This standard was adopted in 1970 and was revised in 1971 to allow drivers to be qualified under this standard while wearing a hearing aid, 35 FR 6458, 6463 (April 22, 1970) and 36 FR 12857 (July 3, 1971).

III. Discussion of Comments

FMCSA received no comments in this proceeding.

IV. Conclusion

Based upon its evaluation of the 18 renewal exemption applications, FMCSA announces its decision to exempt the following drivers from the hearing requirement in § 391.41 (b)(11).

As of August 22, 2020, and in accordance with 49 U.S.C. 31136(e) and 31315(b), the following 18 individuals have satisfied the renewal conditions for obtaining an exemption from the hearing requirement in the FMCSRs for interstate CMV drivers (85 FR 54626):

Mataio Brown (MS)
Barry Carpenter (SD)
Lyle Eash (VA)
Clay Fitzpatrick (ID)
Berenice Martinez (TX)
Michael McCarthy (MN)
Steven Moorehead (KY)
Gary Nagel (MN)
Christopher Poole (OH)
Ricardo Porras-Payan (TX)
James Quinn (TN)
Willine Smith (GA)
Brandon Soto (MO)
Dennis Stotts (OH)
Michael Tayman (ME)
Carlos Torres (FL)
Paul Wentworth (WA)
Joseph Woodle (KY)

The drivers were included in docket number FMCSA–2012–0123, FMCSA–2015–0326, FMCSA–2015–0328, FMCSA–2015–0329, FMCSA–2017–0057, FMCSA–2017–0059, FMCSA–2017–0060, or FMCSA–2017–0061. Their exemptions were applicable as of August 22, 2020, and will expire on August 22, 2022.

In accordance with 49 U.S.C. 31315(b), each exemption will be valid for 2 years from the effective date unless revoked earlier by FMCSA. The exemption will be revoked if the following occurs: (1) The person fails to comply with the terms and conditions of the exemption; (2) the exemption has resulted in a lower level of safety than was maintained prior to being granted; or (3) continuation of the exemption would not be consistent with the goals and objectives of 49 U.S.C. 31136(e) and 31315(b).

Larry W. Minor,

Associate Administrator for Policy.

[FR Doc. 2020–24184 Filed 10–30–20; 8:45 am]

BILLING CODE 4910–EX–P

DEPARTMENT OF THE TREASURY

Office of Foreign Assets Control

Notice of OFAC Sanctions Actions

AGENCY: Office of Foreign Assets Control, Treasury.

ACTION: Notice.

SUMMARY: The Department of the Treasury's Office of Foreign Assets Control (OFAC) is publishing the names of one or more persons that have been placed on OFAC's Specially Designated Nationals and Blocked Persons List based on OFAC's determination that one or more applicable legal criteria were satisfied. All property and interests in property subject to U.S. jurisdiction of these persons are blocked, and U.S. persons are generally prohibited from engaging in transactions with them.

DATES: See **SUPPLEMENTARY INFORMATION** section for effective date(s).

FOR FURTHER INFORMATION CONTACT: OFAC: Associate Director for Global Targeting, tel.: 202–622–2420; Assistant Director for Sanctions Compliance & Evaluation, tel.: 202–622–2490; Assistant Director for Licensing, tel.: 202–622–2480; Assistant Director for Regulatory Affairs, tel.: 202–622–4855.

SUPPLEMENTARY INFORMATION:

Electronic Availability

The Specially Designated Nationals and Blocked Persons List and additional information concerning OFAC sanctions programs are available on OFAC's website (*www.treasury.gov/ofac*).

Notice of OFAC Action(s)

On October 22, 2020, OFAC determined that the property and interests in property subject to U.S. jurisdiction of the following persons are blocked under the relevant sanctions authorities listed below.

Individuals

1. AL-BAGHDADI, Hassan (Arabic: بغدادي حسن) (a.k.a. AL-BAGHDADI, Sheikh Hassan; a.k.a. BAGHDADI, Sheikh Hassan; a.k.a. "AL-BAGHDADI, Sheikh"), Lebanon; DOB 05 Oct 1961; citizen Lebanon; Additional Sanctions Information - Subject to Secondary Sanctions Pursuant to the Hizballah Financial Sanctions Regulations; Gender Male (individual) [SDGT] (Linked To: HIZBALLAH).

   Designated pursuant to section 1(a)(iii)(E) of Executive Order 13224 of September 23, 2001, "Blocking Property and Prohibiting Transactions With Persons Who Commit, Threaten to Commit, or Support Terrorism," 3 CFR, 2001 Comp., p. 786, as amended by Executive Order 13886 of September 9, 2019, "Modernizing Sanctions To Combat Terrorism", 84 FR 48041 (E.O. 13224, as amended), for being a leader or official of HIZBALLAH, a person whose property and interests in property are blocked pursuant to E.O. 13224, as amended.

2. QAOUK, Nabil (Arabic: قاووق نبيل) (a.k.a. KAWOUK, Nabil; a.k.a. QAWOOK, Sheikh Nabil; a.k.a. QAWOUK, Sheikh Nabil; a.k.a. QAWUQ, Nabil Yahy), Ebba, Nabatieh, Lebanon; DOB 20 May 1964; Additional Sanctions Information - Subject to Secondary Sanctions Pursuant to the Hizballah Financial Sanctions Regulations; Gender Male (individual) [SDGT] (Linked To: HIZBALLAH).

   Designated pursuant to section 1(a)(iii)(E) of E.O. 13224, as amended, for being a leader or official of HIZBALLAH, a person whose property and interests in property are blocked pursuant to E.O. 13224, as amended.

Dated: October 22, 2020.

Andrea Gacki,

Director, Office of Foreign Assets Control, U.S. Department of the Treasury.

[FR Doc. 2020–24228 Filed 10–30–20; 8:45 am]

BILLING CODE 4810–AL–P

FEDERAL REGISTER

Vol. 85 Monday,

No. 212 November 2, 2020

Part II

Department of Transportation

National Highway Traffic Safety Administration

49 CFR Part 571

Federal Motor Vehicle Safety Standards; Child Restraint Systems, Incorporation by Reference; Proposed Rule

DEPARTMENT OF TRANSPORTATION

National Highway Traffic Safety Administration

49 CFR Part 571

[Docket No. NHTSA–2020–0093]

RIN 2127–AL34

Federal Motor Vehicle Safety Standards; Child Restraint Systems, Incorporation by Reference

AGENCY: National Highway Traffic Safety Administration (NHTSA), Department of Transportation (DOT).

ACTION: Notice of proposed rulemaking (NPRM); request for comment.

SUMMARY: In accordance with the Moving Ahead for Progress in the 21st Century Act (MAP–21), this document proposes to amend Federal Motor Vehicle Safety Standard (FMVSS) No. 213, ''Child restraint systems,'' by updating the standard seat assembly on which child restraint systems (CRSs) are tested to determine their compliance with the standard's dynamic performance requirements. This NPRM proposes other amendments to modernize FMVSS No. 213, including a lessening of restrictions in some of the standard's owner registration and labeling requirements, to give manufacturers more flexibility in communicating with today's parents for the purposes of increasing owner registrations for recall notification purposes and increasing the correct use of CRSs, respectively. NHTSA is also proposing ways to streamline the Agency's use of test dummies to assess restraint performance, including simplifying the standard's compliance tests to make them more reflective of the real-world use of CRSs today. The purpose of these and other proposals is to modernize the seat assembly and other aspects of FMVSS No. 213, to help ensure the continued effectiveness of CRSs in current and future vehicles.

DATES: Comments must be received on or before January 4, 2021.

Proposed effective date: 180 days after publication of the final rule in the **Federal Register**.

Proposed compliance date: Three years following the date of publication of a final rule in the **Federal Register**, with optional early compliance permitted.

ADDRESSES: You may submit comments to the docket number identified in the heading of this document by any of the following methods:

- *Federal eRulemaking Portal:* Go to *http://www.regulations.gov.* Follow the online instructions for submitting comments.
- *Mail:* Docket Management Facility, M–30, U.S. Department of Transportation, West Building, Ground Floor, Rm. W12–140, 1200 New Jersey Avenue SE, Washington, DC 20590.
- *Hand Delivery or Courier:* West Building, Ground Floor, Room W12–140, 1200 New Jersey Avenue SE, between 9 a.m. and 5 p.m. Eastern Time, Monday through Friday, except Federal holidays. To be sure someone is there to help you, please call (202) 366–9332 before coming.
- *Fax:* 202–493–2251.

Regardless of how you submit your comments, please mention the docket number of this document.

Instructions: For detailed instructions on submitting comments and additional information on the rulemaking process, see the Public Participation heading of the Supplementary Information section of this document. Note that all comments received will be posted without change to *http://www.regulations.gov,* including any personal information provided.

Privacy Act: In accordance with 5 U.S.C. 553(c), DOT solicits comments from the public to better inform its decision-making process. DOT posts these comments, without edit, including any personal information the commenter provides, to *www.regulations.gov,* as described in the system of records notice (DOT/ALL–14 FDMS), which can be reviewed at *www.transportation.gov/privacy.* In order to facilitate comment tracking and response, the agency encourages commenters to provide their name, or the name of their organization; however, submission of names is completely optional. Whether or not commenters identify themselves, all timely comments will be fully considered.

Docket: For access to the docket to read background documents or comments received, go to *www.regulations.gov,* or the street address listed above. To be sure someone is there to help you, please call (202) 366–9322 before coming. Follow the online instructions for accessing the dockets.

FOR FURTHER INFORMATION CONTACT: For technical issues, you may call Cristina Echemendia, Office of Crashworthiness Standards (telephone: 202–366–6345) (fax: 202–493–2990). For legal issues, you may call Deirdre Fujita, Office of Chief Counsel (telephone: 202–366–2992) (fax: 202–366–3820). Address: National Highway Traffic Safety Administration, U.S. Department of Transportation, 1200 New Jersey Avenue SE, West Building, Washington, DC 20590.

SUPPLEMENTARY INFORMATION:

I. Executive Summary
  a. Background
  b. Overview of this NPRM and Request for Comment
II. Statutory Mandate
  a. National Traffic and Motor Vehicle Safety Act (''Vehicle Safety Act'')
  b. MAP–21
  c. NHTSA's Views
III. Updating the Representative Seat Assembly
  a. Background on This Proposed Seat Assembly
  b. Consistency with the Side Impact Bench
  c. Seat Geometry
  1. Seat Back Angle
  2. Seat Pan Angle
  3. Seat Pan Length
  4. Seat Back Height
  5. Rear Seat Cushions
  i. Stiffness of the Bottom Seat Cushion
  ii. Thickness of the Bottom Seat Cushion
  iii. The Foam is Suitable for Use in the Standard's Dynamic Test
  iv. Thickness of the Seat Back Foam
  v. Summary of Seat Assembly Features
  6. Summary of Seat Geometry Features
  d. Seat Belt Anchorage Locations
  e. Child Restraint Anchorage System Locations
IV. Installing CRSs with a Type 2 Belt Rather Than a Type 1 Belt
V. Denial of Petition Regarding a Floor
VI. No Safety Need to Increase Crash Pulse
  a. Introduction
  b. Safety Need—Crash Data Analysis
  c. Hard Copy Review of Case Files
  d. Globally, All Regulations Use a 30 MPH Test Speed
  e. Sled Testing of CRSs
  f. Agency Decision
VII. Fleet Testing of CRSs on the New Seat Assembly Designs
  a. Initial Standard Seat Assembly Design (V1)
  b. Proposed Standard Seat Assembly Design (V2)
VIII. Communicating with Today's Parents
  a. CRS Owner Registration
  1. Background
  2. Overview
  3. Proposed Changes to the Registration Program
  i. Information Card
  ii. Mail-in Card
  iii. Electronic Registration Form
  iv. Information on Labels and in Owners' Manuals
  b. Information on Correctly Using CRSs
  1. Removing Requirements for Specific Wording
  2. Labeling of Use Information
  3. Deleting S5.5.2(k)(2)
  4. Other Requests of Evenflo and Safe Ride News Petition
IX. Streamlining NHTSA's Use of ATDs in Compliance Tests to Reflect CRS Use Today
  a. Introduction
  b. Testing CRSs for Children Weighing 10–13.6 kg (22–30 lb)
  c. Testing CRSs for Children Weighing 13.6–18.2 kg (30–40 lb)

d. Testing CRSs for Children Weighing 18–29.5 kg (40–65 lb)
e. Positioning the Legs of the HIII–3YO Dummy in Rear-Facing CRSs
f. Table Summarizing Proposed Amendments
g. Consistency with NHTSA's Use of ATDs in the Proposed Side Impact Test
X. School Bus CRSs
XI. Child Passenger Safety Issues Arising from Research Findings
XII. Proposed Lead Time
XIII. Corrections and Other Minor Amendments
a. Correct Reference
b. Section 5.1.2.2
c. Table to S5.1.3.1(a) and Test Configuration II
d. Updating reference to SAE Recommended Practice J211/1
XIV. Regulatory Notices and Analyses
XV. Public Participation
XVI. Appendix to Preamble

I. Executive Summary

Consistent with MAP–21, NHTSA proposes to amend FMVSS No. 213 to update the standard seat assembly on which child restraint systems (CRSs) are tested for compliance with the standard's dynamic performance requirements. NHTSA also proposes lessening restrictions in some of the standard's owner registration requirements to give manufacturers more flexibility to use current ways of communication for the purposes of increasing owner registrations for recall notification purposes. This NPRM proposes to lessen restrictions on the labeling requirements so manufacturers have the flexibility to provide CRS use information in statements, or a combination of statements and pictograms, in their own words at locations that they deem most effective in instructing caregivers on the correct use of the CRS. This NPRM also proposes ways to streamline the Agency's use of test dummies to assess restraint performance, including simplifying NHTSA's compliance tests to make them more reflective of the real-world use of CRSs today. In addition, NHTSA proposes amendments to FMVSS No. 213 to make the standard more design-neutral in accommodating CRSs that are designed for exclusive use on school bus seats.[1] Lastly, NHTSA requests comment on several developments in child passenger safety, including the findings of research studies that raise safety concerns associated with some types of CRSs.

a. Background

FMVSS No. 213 applies to all new child restraint systems (''CRSs'' or ''child restraints'') sold in this country. FMVSS No. 213 specifies performance requirements that must be met in a dynamic frontal sled test involving a 48 kilometer per hour (km/h) (30 mile per hour (mph)) velocity change, which is representative of a severe crash. Each child restraint is tested with an anthropomorphic test device (''ATD'' or ''test dummy'') while attached to a standardized seat assembly representative of a passenger vehicle seat (''standard seat assembly''). Currently, CRSs for infants and toddlers must meet minimum performance requirements when attached to the standard seat assembly by means of a lap belt. In addition, those CRSs must also meet those requirements in separate tests when attached by means of the lower anchorages of a child restraint anchorage system.[2] Belt-positioning (booster) seats are tested on the standard seat assembly using a lap and shoulder belt, since the booster seats are specially designed to raise the child on a platform to obtain a proper fit of the vehicle lap and shoulder belts.[3]

Child restraints are highly effective in reducing the likelihood of death and injury in motor vehicle crashes. NHTSA estimates that, for children less than 1 year old, a child restraint can reduce the risk of fatality by 71 percent when used in a passenger car and by 58 percent when used in a pickup truck, van, or sport utility vehicle (SUV) (''light truck''). Child restraint effectiveness for children between the ages of 1 and 4 years old is 54 percent in passenger cars and 59 percent in light trucks.[4]

b. Overview of this NPRM and Request for Comment

The main topics discussed in this document are highlighted below. This document retrospectively reviews and proposes revisions to FMVSS No. 213 to modernize the seat assembly and remove obsolete provisions from the standard. The Agency's goal is to ensure the continued effectiveness of CRSs in current and future vehicles, thereby reducing the unreasonable risk of injury to children in motor vehicle crashes. (All references below are to subparagraphs in FMVSS No. 213 unless otherwise noted.)

1. As directed by § 31501(b) of MAP–21, NHTSA proposes to amend the standard seat assembly (S6.1.1(a)(1)(ii)) so that it more closely resembles ''a single representative motor vehicle rear seat.'' The updated seat would have a seat cushion stiffness, seat geometry, and seat belt system (a lap/shoulder belt) (3-point or Type 2 belt system) that better represents rear seats of current passenger vehicle models. Given that Type 2 belts are required to be installed in passenger vehicles today, NHTSA proposes that CRSs meet the performance requirements of the standard while attached to the seat assembly with a Type 2 belt. We propose to delete, as obsolete, the current provisions in FMVSS No. 213 requiring CRSs to meet the standard's requirements when attached to the seat assembly with a lap belt (2-point or Type 1 belt) (S5.3.2).[5]

Although features of the standard seat assembly will be updated, NHTSA believes that the differences between the updated and current seat assemblies will not significantly affect the performance of CRSs in meeting FMVSS No. 213. In developing this NPRM, NHTSA tested a wide variety of CRS designs in the market using the updated seat assembly. These CRSs had been certified by their manufacturers as meeting FMVSS No. 213's performance criteria using the current seat assembly in the standard (which is representative of designs of older vehicle seats). In the tests on the updated seat assembly, all of the CRSs also met the standard's performance requirements. These data indicate that new CRSs that will be certified as meeting FMVSS No. 213 on the new standard seat assembly will perform as well in older model year vehicles.

2. To make FMVSS No. 213 more responsive to the communication preferences and practices of today's parents and to provide greater flexibility to manufacturers in responding to those preferences, this NPRM proposes to reduce the restrictions on the content and format of the owner registration card manufacturers must provide with new CRSs for purposes of recall notifications (S5.8). Manufacturers would still be required to provide the means to register by mail, but, at their option, would be able to use modern means of outreach and information

[1] Currently, FMVSS No. 213 only permits a type of school bus ''harness.'' The proposed amendments would permit designs other than harnesses for this type of CRS.

[2] See 49 CFR 571.225.

[3] There is also a 32 km/h (20 mph) test configuration for CRSs that have a certain type of torso restraint to ensure that the CRSs provide at least a minimum level of protection when the torso restraint is misused. *See* FMVSS No. 213 S6.1.1(b)(2), ''Test Configuration II.''

[4] Traffic Safety Facts—Children 2012 Data (April 2016). *https://crashstats.nhtsa.dot.gov/Api/Public/Publication/812491.* Last accessed on Aug 6, 2018.

[5] ''Type 1'' and ''Type 2'' seat belt assemblies are defined in FMVSS No. 209, ''Seat belt assemblies.'' This NPRM would not change the current requirement that CRSs also need to meet FMVSS No. 213 requirements while attached using a child restraint anchorage system.

exchange and take advantage of the latest innovative technologies to increase owner registration rates.

3. To improve FMVSS No. 213's labeling requirements to better instruct parents how best to use CRSs correctly, the NPRM proposes amendments to the labeling requirements (S5.5). FMVSS No. 213 currently requires manufacturers to label CRSs with information on the maximum height and weight of the children who can safely occupy the system (S5.5.2(f)). NHTSA believes there is a continued need for this ''use information'' to be permanently labeled on CRSs. However, to clarify the information, the NPRM proposes requiring that the information must be provided for each mode in which the CRS can be used (rear-facing, forward-facing, booster). Further, NHTSA proposes to lessen restrictions on the use information (S5.5, S5.6) by deleting requirements that prescribe specific wording about the height and weight ranges of children for whom the CRS is recommended and that specify that the label must be placed along other required statements in a warning label (S5.5.2(f), S5.5.2(g)(1)(i))). Instead, NHTSA proposes that, subject to the conditions listed below, manufacturers should have the flexibility to provide the use information in statements, or a combination of statements and pictograms, at visible locations that manufacturers deem most effective.

The proposed conditions are based on sound best practice recommendations developed by the child passenger safety community, or are derived from our analyses of available data and other technical information. Manufacturers would have considerable flexibility to optimize the use information they provide for their CRSs, provided that the information meets these conditions.

• Currently S5.5.2(f) requires child restraints to be labeled with the *overall* maximum and minimum height and weight ranges of the children for whom the CRS is recommended. In response to a petition for rulemaking from Evenflo and SafeRide News,[6] NHTSA proposes that, for CRSs that can be used in multiple ''modes'' depending on the height and weight of the child (rear-facing, forward-facing, booster, etc.), the use information must be stated separately for each mode. To illustrate, instead of stating that a CRS (that can be used rear-facing and forward-facing) is for use by children weighing 5 to 65 lb (2.2–29.5 kg) and with heights up to 48 inches (121.9 centimeters (cm)), the label would indicate that the CRS is for use rear-facing by children weighing 5 to 40 lb (2.2 to 18.2 kg) and with heights up to 48 inches (121.9 cm), and forward-facing by children weighing 30 to 65 lb (13.6 to 29.5 kg) and with heights up to 48 inches (121.9 cm). The proposed condition would protect children under age 1-year[7] better by providing greater assurance that they are not turned forward-facing too soon. The proposed condition would also provide better guidance to caregivers on when to graduate a child from a rear-facing CRS to a forward-facing CRS with integral internal harness (car safety seat) and to a CRS in the booster seat mode.

• Relatedly, the following condition better ensures a child under age 1 will be positioned rear-facing than forward-facing. A child under age 1 is safest transported rear-facing. In seeking to achieve that end, FMVSS No. 213 currently specifies that forward-facing CRSs can only be recommended for children with a minimum weight of 9 kg (20 lb) (S5.5.2(k)(2)). However, the 9 kg (20 lb) threshold is too low. Although NHTSA meant for that weight to be a minimum, many CRSs use a weight of only 9 kg (20 lb), stating on their labels that a child may be forward-facing starting when he or she is 20 lb. NHTSA would like to raise the standard's 20-lb threshold because it is too low to capture a sufficient population of one-year-olds, as 9 kg (20 lb) is about the weight of an average 9-month-old. To increase the number of children under age 1 who are transported rear-facing, NHTSA proposes to raise this weight threshold to 12 kg (26.5 lb), which is the weight of a 95th percentile one-year-old.[8] The Agency believes that the change to 26.5 lb would capture almost all one-year-olds and would therefore increase the number of children under age 1 transported rear-facing.

• The following condition would enhance the protection of 3- to 4-year-old children traveling in motor vehicles. While FMVSS No. 213 currently specifies that booster seats can only be recommended for children with a minimum weight of 30 lb (S5.5.2(k)(2)), NHTSA tentatively believes this minimum should be raised to 18.4 kg (40 lb). Crash data[9] show that, among 3- and 4-year-olds, the risk of non-incapacitating to fatal injury[10] increases as much as 27 percent when the child is restrained in a booster seat rather than in a car safety seat (a CRS that has an integral internal harness). An 18.4 kg (40 lb) threshold corresponds generally to the weight of a 97th percentile 3-year-old (17.7 kg (39.3 lb)) and an 85th percentile 4-year-old. NHTSA believes that if booster seats were only recommended for children weighing a minimum of 18.4 kg (40 lb), more 3- and 4-year-olds will be transported in car safety seats, where they are better protected at that young age, than in booster seats. Booster seats are and continue to be a critical type of child restraint needed to restrain children properly in vehicles.[11] Children will still transition to booster seats, but just when they are a little larger.

4. To simplify and make more realistic the Agency's compliance testing of child restraint systems with various anthropomorphic test devices (ATDs) (test dummies), this NPRM proposes the following changes.

• NHTSA proposes streamlining the Agency's selection of ATDs (test dummies) to assess CRS performance (S7). NHTSA would amend specifications for ATD selection (S7.1.2(c)) so that CRSs for children weighing 10 kg to 13.6 kg (22 to 30 lb) would be tested with just the 12-month-old child test dummy (Child Restraint Air Bag Interaction (CRABI–12MO)), and would no longer be subject to being tested with the Hybrid III 3-year-old (HIII–3YO) test dummy. This proposed change would better align the dummy used in tests of infant carriers[12] with the size and weight of children typically restrained in infant carriers.

• Similarly, NHTSA proposes amendments affecting CRSs labeled for children weighing from 13.6 kg to 18.2

[6] A copy of the May 13, 2011 petition for rulemaking is in the docket. NHTSA is granting this request; this document denies other aspects of the petition.

[7] NHTSA and the entire child passenger safety community strongly recommend that children be kept riding rear-facing at least up to the age of 1-year. Children under age 1 are safer rear-facing than forward-facing because in a crash the forces will be spread evenly across the child's back and shoulders, the strongest part of the child's body. Further, the back of the head rests against and is supported by the seating surface.

[8] A 50th percentile 1-year-old weighs 22 lb.

[9] ''Booster Seat Effectiveness Estimates Based on CDS and State Data,'' NHTSA Technical Report, DOT HS 811 338, July 2010. *http://www-nrd.nhtsa.dot.gov/Pubs/811338.pdf,* last accessed on August 8, 2018.

[10] The KABCO injury scale used is an on-the-scene police-reported measure of injury. ''K'' is killed, ''A'' is incapacitating injury, ''B'' is non-incapacitating injury and ''C'' is possible injury.

[11] NHTSA instructs that children should be restrained in a CRS for the child's age and size. From birth through adulthood, children should be restrained first using a rear-facing car seat, then a forward-facing car seat, then a booster seat, and finally, the vehicle's seat belts. *https://www.nhtsa.gov/equipment/car-seats-and-booster-seats#age-size-rec.*

[12] An infant carrier is a rear-facing CRS designed to be readily used in and outside of the vehicle. It has a carrying handle that enables caregivers to tote the CRS plus child outside of the vehicle. Some come with a base that stays inside the vehicle onto which the carrier attaches.

kg (30 to 40 lb). Currently, these CRSs are tested with the CRABI–12MO and the HIII–3YO. NHTSA tentatively believes that testing with the (22 lb) CRABI–12MO is unnecessary because the dummy is not representative of 13.6–18.2 kg (30–40 lb) children.[13] This change would make NHTSA's compliance tests more reflective of real world CRS use.

• For CRSs for children in the 18.2 kg to 29.5 kg (40 to 65 lb) weight range, NHTSA proposes to amend FMVSS No. 213 to specify testing solely with the state-of-the-art HIII–6YO child ATD. Due in part to issues relating to the HIII–6YO's performance in tests on the current (outdated) standard seat assembly, FMVSS No. 213 has provided manufacturers the option of NHTSA conducting compliance tests using the HIII–6YO or an older Hybrid II (H2) version of the test dummy (H2–6YO) (S7.1.2(d), S7.1.3). With the move to the updated seat assembly, the Agency believes the unrealistic chin-to-chest and head-to-knee contact problems seen in tests of the HIII–6YO on the current seat assembly would be eliminated. The HIII–6YO is preferred as it is a more biofidelic test device than the H2–6YO dummy, and more and more CRS manufacturers are using the HIII–6YO rather than the H2–6YO dummy. Further, phasing out of the older H2–6YO is desirable because it is becoming more difficult to obtain replacement parts for the dummy. For these reasons, NHTSA is proposing to remove the optional use of the H2–6YO dummy and, instead, to adopt a provision that NHTSA will only use the HIII–6YO in compliance tests. NHTSA proposes sufficient lead time (*e.g.,* 3 years after publication of a final rule) for the change.

• Increasing numbers of CRSs are sold for use rear-facing with older children. To facilitate the Agency's compliance testing of the restraints, NHTSA proposes a procedure for positioning the 3-year-old child test dummy's legs when the dummy is rear-facing. The procedure involves placing the dummy's legs up against the seat back and removing the dummy's knee joint stops, which allows the legs to extend at the knee in the sled test and not brace the legs against the seat back. The proposed procedure is already used by some commercial test labs and CRS manufacturers to assess the suitability of rear-facing CRSs for older children.

[13] If the CRS were also labeled as suitable for use by children weighing less than 13.6 kg (30 lb), then the CRS would be subject to testing with the CRABI–12MO.

5. NHTSA proposes amendments to FMVSS No. 213 to accommodate different types of CRSs that are designed for exclusive use on school bus seats. These restraints are designed to install on school bus seats by way of straps wrapped around the school bus seat back or the seat back and seat pan (seat back mount or seat back and seat pan mounts). Currently FMVSS No. 213 permits a type of school bus ''harness'' (*see* S5.3.1(b) and S5.6.1.11). To permit restraints other than harnesses, the proposed amendments would include a new design-neutral definition for this type of CRS. This NPRM proposes specific requirements for the CRSs, including a warning label and instructions that indicate that the CRS must only be used on school bus seats.

Estimated Benefits and Costs

The proposal has the potential to provide safety benefits with, at most, minimal incremental costs.

Updating Sled Assembly and Testing With Type 2 Belts

The proposed updates to the sled test and testing with Type 2 belts would better align the performance of CRSs in compliance tests to that in real world crashes. NHTSA believes there would be benefits from making the FMVSS No. 213 test more representative of real world crashes, but quantification of the associated benefits/costs is not possible at this time due to a lack of data to make such an assessment.

There would only be de minimus costs involved in changing the standard seat assembly used by NHTSA to assess CRS compliance. Manufacturers are not required to use the standard seat assembly, but as a practical matter they usually choose to do so, to test their CRSs as similarly as possible to the tests conducted by NHTSA. The one-time cost of the updated standard seat assembly sled buck is about $8,000. Whether a manufacturer chooses to build the assembly itself or uses one at an independent test facility, cost impacts are minimal when distributed among the hundreds of thousands of CRSs that would be sold by each manufacturer.

NHTSA estimates that there would be little or no increased costs to child restraints to meet FMVSS No. 213's requirements when tested on the new sled assembly. The Agency's test data of representative CRSs in the fleet showed that virtually all CRSs met the standard's requirements when tested on the new sled assembly.

Registration Program

The proposed changes to the registration card would provide flexibility to manufacturers in how they communicate with consumers and would likely help improve registration rates and recall completion rates. However, NHTSA cannot quantify the benefits at this time. The Agency estimates there would be no costs associated with the proposed changes. The proposed changes to the registration program would lessen restrictions and would be optional for manufacturers to implement. While the changes could affect the collection of information pursuant to the Paperwork Reduction Act (discussed later in this preamble), there would be no additional material cost associated with the proposed changes to the registration card. Manufacturers could use the same card and just change the wording on them.

Labeling

The Agency believes that the proposed updates to the labeling requirements would benefit safety by reducing the premature graduation of children from rear-facing CRSs to forward-facing CRSs, and from forward-facing CRSs to booster seats. The Agency estimates potentially 0.7 to 2.3 lives would be saved and 1.0 to 3.5 moderate-to-critical severity injuries would be prevented annually by raising the manufacturer-recommended minimum child weight for the use of forward-facing CRSs from 9 kg (20 lb) to 12 kg (26.5 lb). NHTSA also estimates potentially 1.2 to 4 lives would be saved and 1.6 to 5.2 moderate-to-critical injuries would be prevented by raising the manufacturer-recommended minimum child weight for use of booster seats from 13.6 kg (30 lb) to 18.2 kg (40 lb).[14]

The proposed changes to the labeling requirements would have minimal or no cost impacts, as mostly they are deregulatory. Manufacturers would be given the flexibility to provide required information in statements or a combination of statements and pictograms at locations that they deem most effective. Manufacturers may provide the recommended child weight and height ranges for the use of CRSs in a specific installation mode on existing voluntary labels by simply changing the minimum child weight limit values. Since no additional information would be required on the labels by this NPRM, the size of the label would not need to be increased. Thus, there would be minimal or no additional cost for the

[14] The details of the benefits analysis are provided in the Appendix to this preamble.

label. There would also be no decrease in sales of forward-facing car safety seats or of booster seats as a result of the proposal to raise the minimum child weight limit values for forward-facing CRSs and booster seats. Most forward-facing CRSs cover a wide child weight range, so the labeling changes would only affect how consumers use the products and not the sale of them. For example, consumers would still purchase forward-facing car safety seats but would wait to use them until the child is at least 1. They would still purchase convertible [15] CRSs, but will delay turning the child forward-facing until the child is at least 1. Consumers would still purchase booster seats, but would use them when the child reaches 18.2 kg (40 lb) rather than 13.6 kg (30 lb).

ATDs

The proposed updates in how ATDs are used in the sled test for assessing CRS performance better accords with current CRS designs and best practices for transporting child passengers compared to the current specifications in FMVSS No. 213. NHTSA cannot quantify the possible safety benefits at this time.

Manufacturers are not required to test their CRSs the way NHTSA tests child restraints in a compliance test. Assuming manufacturers choose to conduct the tests specified in FMVSS No. 213 to make their certifications of compliance, NHTSA believes there would be no cost increases associated with the proposals. Some of the proposed changes lessen testing burdens by reducing the extent of testing with ATDs. For example, the NPRM proposes that CRSs for children weighing 10 kg to 13.6 kg (22 to 30 lb) would no longer be subject to testing with the HIII–3YO dummy. NHTSA estimates a reduction in testing cost of $540,000 for the current number of infant carrier models in the market. Also, CRS for children weighing 13.6–18.2 kg (30–40 lb) would no longer be tested with the CRABI–12MO. The proposed positioning procedure for the legs of the HIII–3YO dummy in rear-facing CRSs is unlikely to have cost implications because the procedure is similar, if not identical, to that currently used by manufacturers.

NHTSA believes there would only be minimal costs associated with NHTSA's testing CRSs solely with the HIII–6YO dummy rather than the H2–6YO dummy. This is because there would be little or no design changes needed for the CRSs due to this proposed update since nearly all the CRSs tested with the HIII–6YO in the proposed standard seat assembly complied with all the FMVSS No. 213 requirements.[16] NHTSA's testing also showed that CRSs that currently comply with FMVSS No. 213 using the H2–6YO dummy also met all the performance requirements in the standard when tested using the HIII–6YO dummy in the proposed standard seat assembly. In addition, manufacturers increasingly are certifying at least some of their CRS models for older children using the HIII–6YO dummy rather than the H2–6YO and so most manufacturers already have access to the HIII–6YO dummy and would not need to purchase the dummy as a result of this proposed update.

We believe a lead time of three years is sufficient for redesigning CRSs that may need modifications to comply with the proposed updates to ATD selection for the sled test because most CRSs would need minor or no modifications to meet the proposed requirements. Further, a 3-year time frame aligns with the typical design cycle for CRSs, so any change needed to meet the requirements could be accommodated in the manufacturers' normal refinement or refreshing of their designs. We note also that manufacturers have the option of not changing CRS designs in some instances, and may instead change the weight of the children for whom the CRS is recommended. Narrowing the population of children for whom the CRS is recommended in many instances would reduce the number of ATDs NHTSA would use in its compliance tests of the CRS.

School Bus Child Restraint Systems

The proposed changes to include in FMVSS No. 213 a new type of CRS manufactured for exclusive use on school bus seats would allow the sale of these products. The agency estimates there would be no cost impacts associated with the proposed changes because currently available products covered by the new definition of a school bus CRS already meet the proposed requirements. The benefits of the proposed changes are associated with the popularity of such CRSs in the pupil transportation industry for transporting preschool and special-needs children. However, NHTSA cannot quantify these benefits at this time.

II. Statutory Authority

This NPRM is issued under the National Traffic and Motor Vehicle Safety Act (49 U.S.C. 30101 *et seq.*) and MAP–21.

a. National Traffic and Motor Vehicle Safety Act (''Vehicle Safety Act'')

Under the Vehicle Safety Act, the Secretary of Transportation [17] is responsible for prescribing motor vehicle safety standards that are practicable, meet the need for motor vehicle safety, and are stated in objective terms.[18] ''Motor vehicle safety'' is defined in the Vehicle Safety Act as ''the performance of a motor vehicle or motor vehicle equipment in a way that protects the public against unreasonable risk of accidents occurring because of the design, construction, or performance of a motor vehicle, and against unreasonable risk of death or injury in an accident, and includes nonoperational safety of a motor vehicle.'' [19] ''Motor vehicle safety standard'' means a minimum performance standard for motor vehicles or motor vehicle equipment.[20] When prescribing such standards, the Secretary must consider all relevant, available motor vehicle safety information, and consider whether a standard is reasonable, practicable, and appropriate for the types of motor vehicles or motor vehicle equipment for which it is prescribed.[21] The Secretary must also consider the extent to which the standard will further the statutory purpose of reducing traffic crashes and associated deaths and injuries.[22]

b. MAP–21

MAP–21 incorporates Subtitle E, ''Child Safety Standards.'' Section 31501(b)(1) of Subtitle E requires that not later than 2 years after the date of enactment of the Act, the Secretary [23] shall commence a rulemaking proceeding to amend the standard seat assembly specifications under Federal Motor Vehicle Safety Standard Number 213 to simulate a single representative motor vehicle rear seat better.

c. NHTSA's Views

NHTSA is issuing this NPRM under Vehicle Safety Act authority and MAP–21. Section 31501(b)(2) of MAP–21

[15] A convertible CRS is a type of CRS that can be used rear-facing or forward-facing with an internal harness system to secure a child.

[16] Of 21 tests with the HIII–6YO in the proposed seat assembly, all passed the performance metrics, except for one that failed head excursion limits.

[17] The responsibility for promulgation of Federal motor vehicle safety standards is delegated to NHTSA. 49 CFR 1.95.

[18] 49 U.S.C. 30111(a).

[19] 49 U.S.C. 30102(a)(8).

[20] 49 U.S.C. 30102(a)(9).

[21] 49 U.S.C. 30111(b).

[22] Id.

[23] Authority delegated to NHTSA. 49 CFR 1.95(p)(2).

directs NHTSA to issue a final rule amending the standard seat assembly of FMVSS No. 213. NHTSA believes that, in requiring a final rule amending ''Federal Motor Vehicle Safety Standard Number 213,'' MAP–21 envisions that the rulemaking on the standard seat assembly will accord with the requirements and considerations for FMVSSs under the Vehicle Safety Act.

III. Updating the Representative Seat Assembly

To update FMVSS No. 213's assessment of CRS performance, NHTSA proposes to amend the standard seat assembly specified by FMVSS No. 213 to better simulate ''a single representative motor vehicle rear seat,'' as directed by § 31501(b) of MAP–21. The updated seat would comprise a stiffer seat cushion, representative seat geometry, and a 3-point seat belt (in lieu of the 2-point lap belt on the current seat assembly). The updated seat assembly would have only one seating position, unlike the current FMVSS No. 213 standard seat assembly, which has two positions.

a. Background on This Proposed Seat Assembly

In 2003, in response to the Transportation Recall Enhancement, Accountability and Documentation (TREAD) Act,[24] NHTSA updated the FMVSS No. 213 standard seat assembly to make it more representative of rear seats of the vehicle fleet (68 FR 37620, June 24, 2003).[25] The 2003 final rule changed the seat assembly's seat pan angle, seat back angle, spacing between the anchors of the lap belts and the rigidity of the seat back. Due to TREAD Act timeframes, limited agency resources and competing priorities, the update did not include modifications to the seat cushion.[26]

Aware that the seat cushion of the FMVSS No. 213 seat assembly was softer than the rear seat cushions of many new vehicles in the fleet, NHTSA continued to investigate seat cushion stiffness and other characteristics after the 2003 final rule. In 2012, the agency initiated a research program (''Vehicle Rear Seat Study'') as part of an initiative to assess the representativeness of the FMVSS No. 213 frontal impact sled test.[27] The Vehicle Rear Seat Study surveyed vehicles in the fleet to compile data on the rear seat environment. The study measured 43 individual rear seating positions in 24 model year (MY) 2010 vehicles. Measurements were obtained on features that included seat back angle and height, seat pan width, softness of the seat cushion, location of seat belts and locations of child restraint anchorage systems.

NHTSA used data from the Vehicle Rear Seat Study in designing the seat assembly proposed in the January 28, 2014 NPRM on FMVSS No. 213's side impact test.[28] The dynamic sled test was originally developed by Takata Corporation. The agency used the vehicle survey data to guide the proposed seat design towards a seat assembly better representing the U.S. vehicle fleet. NHTSA sought to have the proposed seat assembly geometry and the belt and child restraint anchorage locations within one standard deviation of the average values in the current vehicle fleet. The proposed side impact bench seat assembly also had features of the seat assembly of Regulation No. 44 (R.44) of the United Nations Economic Commission for Europe (ECE), ''Uniform provisions concerning the approval of restraining devices for child occupants of power-driven vehicles (child restraint systems)'' (ECE R.44).

The January 28, 2014 side impact NPRM generated many comments on the proposed side impact seat assembly, notably with regard to the difficulty some commenters had in procuring the ECE R.44 seat cushion that had been proposed for inclusion in the seat assembly. Commenters also requested some changes to the lower anchorage specifications.

b. Consistency with the Proposal for the Side Impact Bench

As noted above, NHTSA's January 28, 2014 NPRM proposing to add a dynamic side impact test to FMVSS No. 213 included specifications for a standard seat assembly that would be used in the compliance test. After reviewing the comments on the side impact proposal and other information, NHTSA is considering using the seat assembly proposed in this NPRM for the side impact test instead of the seat assembly that was proposed in the January 28, 2014 side impact NPRM. NHTSA believes that using the same specifications of the standard seat assembly (including seat geometry, seat cushion, and anchorage locations[29]) for both the side impact test and a frontal impact test makes sense, since the aim is to have a representative seat assembly and the same passenger vehicles are involved in side and frontal crashes.

The standard seat assembly proposed in the January 2014 side impact NPRM is substantially like the seat proposed in this NPRM, but NHTSA believes this proposed seat assembly is a better seat assembly primarily regarding the cushion foam. The former specified use of the ECE R.44 seat cushion, while this proposed seat assembly incorporates seat cushion foam that is more representative of the seat cushion stiffness of the current vehicle fleet. This proposed seat cushion is also easier to procure than the ECE R.44 foam. Commenters to the January 2014 side impact NPRM expressed concerns about the difficulty to source the ECE R44 seat foam, which is only available from one overseas supplier.[30] NHTSA tentatively believes that using the foam specified in this NPRM for the frontal test seat assembly would alleviate those concerns.

There would be a few adjustments that would be made to the standard seat assembly proposed in the January 2014 side impact NPRM to make it like the seat assembly proposed today. This NPRM proposes cushion foam 101.6 mm (4 inches) thick while the ECE R.44 seat cushion is 127 mm (5 inches). If the foam specified in this NPRM is used in the side impact test, the intruding door structure of the side impact standard seat assembly would need to be lowered about an inch to maintain the vertical position of the intruding door relative to the standard seat assembly. Some adjustments would also be made to the seat belt anchorage locations and the seat back height proposed in the January 2014 NPRM. These and other issues are discussed in detail below in this preamble. The positioning of the child restraint anchorage system would be slightly moved so that the lower bars would be located where they are on the frontal test seat assembly proposed today.[31]

[24] November 1, 2000, Pub. L. 106–414, Stat. 1800.

[25] The 2003 final rule also updated the sled pulse to provide a wider test corridor.

[26] A seat cushion consists of foam and a cover.

[27] Aram, M.L., Rockwell, T., ''Vehicle Rear Seat Study,'' Technical Report, July 2012. Report available in the docket for this NPRM.

[28] 79 FR 4570, *supra.* As noted earlier, § 31501(a) of MAP–21 states that the Secretary shall issue a final rule amending FMVSS No. 213 to improve the protection of children seated in child restraint systems during side impact crashes.

[29] Anchorage locations are aligned to the corresponding seat assembly's seat orientation reference line (SORL).

[30] See also a memorandum documenting ex parte meeting with the Juvenile Products Manufacturers Association (JPMA), available at Docket No. NHTSA–2013–0055–0004.

[31] NHTSA notes that the lower anchorage bars may not be configured like they are on the frontal test seat assembly proposed today. The lower anchorage design on the frontal test seat assembly consists of two side structures with a replaceable lower anchorage bar, a design that eases the bar's replacement. NHTSA may not incorporate this

Continued

Comments are requested on this issue of consistency between the seat assembly used in the side impact test and the seat assembly proposed in this NPRM for FMVSS No. 213's frontal impact test.

c. Seat Geometry

The Vehicle Rear Seat Study measured the vehicles' seat geometry and anchorage locations using a Seat Geometry Measuring Fixture (SGMF). The SGMF consisted of two wood blocks (600 mm x 88 mm x 38 mm) and a 76 mm (3 inches) hinge (see Figure 1 below). To make the rear seat geometry measurements, the SGMF was positioned on the centerline of each rear seat position. Point A (see Figure 1), which corresponds to the hinge location of the SGMF, was the reference point for all measurements.

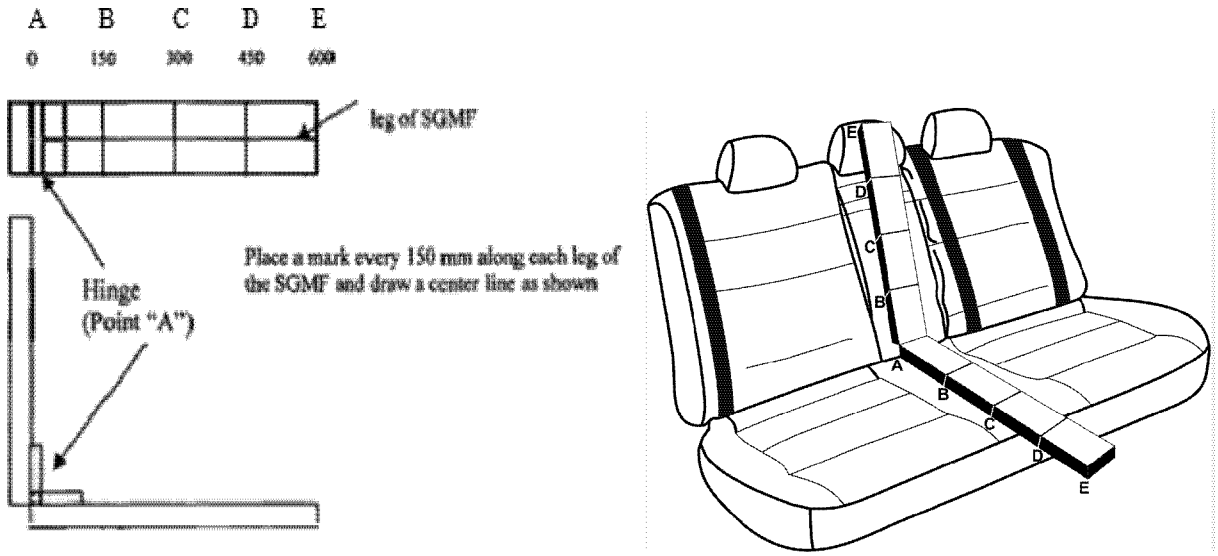

Figure 1. SGMF sketch (left), SGMF positioned in a vehicle rear seat.

1. Seat Back Angle

The Vehicle Rear Seat Study found that the average seat back angle of the surveyed vehicles was 20 degrees from vertical, with a standard deviation of 4 degrees.[32] The seat back angle ranged from a minimum of 9 degrees to a maximum of 28 degrees from vertical.

The Agency is proposing a seat back angle of 20 degrees on the updated test seat assembly. The value is representative of the seat back angles found in the vehicle fleet (within one standard deviation of the average values in the current fleet). Also, the proposed seat back angle would simplify the change to a new seat assembly in that it would be the same as the angle of the current FMVSS No. 213 test seat assembly and that of the originally-proposed standard seat for the side impact test.

2. Seat Pan Angle

For the seat pan angle, the Vehicle Rear Seat Study found that the average angle was 13 degrees from the horizontal, with a standard deviation of 4 degrees.[33] The seat pan angle ranged from a minimum of 7 degrees to a maximum of 23 degrees.

The Agency is proposing to maintain a seat pan angle of 15 degrees on the updated test seat assembly. The measurement is representative of the seat pan angles found in the vehicle fleet (within one standard deviation of the average values in the current fleet). Also, the proposed seat pan angle would simplify the change to a new seat assembly in that it would be the same as the angle of the current FMVSS No. 213 test seat assembly and that of the originally-proposed standard seat assembly for the side impact test.

The Agency notes that the seat pans of some vehicle rear seats are equipped with anti-submarining devices or are contoured in a manner to prevent submarining. The Agency did not replicate these features in the standard seat assembly for simplicity's sake. NHTSA tentatively concludes that a seat pan angle of 15 degrees is representative of the seat pan angle of rear seats in the vehicle fleet and would be sufficient for evaluating the performance of CRSs attached to the seat.

At the end of the seat geometry section, Table 3, *infra,* shows a comparison of the seat back and seat pan angles found in the vehicle fleet, and the proposed and current angles of the test seat assembly.

3. Seat Pan Length

The Vehicle Rear Seat Study showed that the average seat pan length of the surveyed vehicles was 406 mm (16 inches) with a standard deviation of 38 mm (1.5 inches).[34]

particular anchorage design into the side impact seat assembly, as some commenters to the January 2014 side impact NPRM noted that the side structure of the lower anchorages can interfere with the lower anchorage attachments of the tested CRS. Instead, NHTSA is considering reconfiguring the design of the lower anchorages of the side impact seat assembly so that undue interference would be avoided.

[32] The current seat back angle of the FMVSS No. 213 seat assembly is 20 degrees.

[33] The current seat pan angle of the FMVSS No. 213 seat assembly is 15 degrees.

[34] The current FMVSS No. 213 test seat assembly has a seat pan length of 16.3 inch (416 mm).

The Agency is proposing a seat pan length of 412 mm (16.2 inches), which is within one standard deviation of the average seat pan length in the current vehicle fleet.

4. Seat Back Height

The Vehicle Rear Seat Study showed that the average height of the seat back was 688 mm (27 inches) with a standard deviation of 76 mm (3 inches) when the head restraint was included and 578 mm (22.7 inches) with a standard deviation of 60 mm (2.3 inches) when the head restraint was not included in the measurement.[35]

The Agency is proposing a seat back height of 573 mm (22.5 inches) for the new standard seat assembly, which is within one standard deviation of the average seat back height when the head restraint is not included.

5. Rear Seat Cushions

i. Stiffness of the Bottom Seat Cushion

The Agency compared the stiffness of rear seat cushions (consisting of foam and a cover) in the fleet to that of the seat cushions used in various test programs, including FMVSS No. 213. NHTSA first measured the quasi-static stiffness (force-deflection) of the seat cushions in rear seats of 13 MY 2003–2008 passenger vehicles.[36] The 13 passenger vehicles were representative of the current vehicle fleet, and comprise a mix of different vehicle types (passenger cars, SUVs, and minivans) produced by different vehicle manufacturers.

A quasi-static load was applied at a rate of 0.374 mm/s using a 203 millimeters (mm) (8 inch) diameter disk shaped indentor. NHTSA compared the force-deflection values to those of the standard seat assembly specified in the New Programme for the Assessment of Child Restraint Systems (NPACS),[37] ECE R.44, and FMVSS No. 213. The force-deflection curves of the different seat cushions are presented in Figure 2 below.

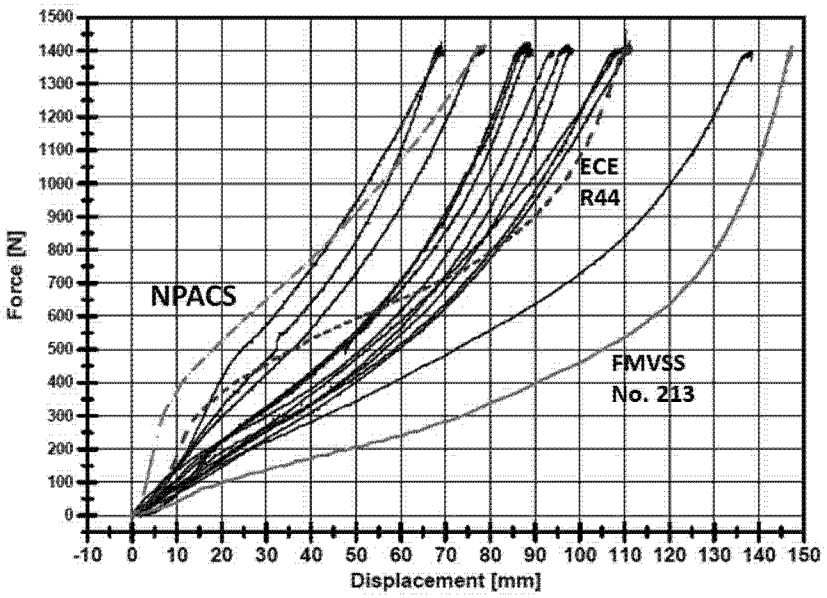

Figure 2. Force displacement response in quasi-static tests on vehicle rear seats (black solid), ECE R 44 (dashed), NPACS (dashes and dots) and FMVSS No. 213 seat cushion (grey solid).

The data showed that the current FMVSS No. 213 initial seat cushion stiffness (force for the first 25 mm of deflection) is less than that of the seat cushions in the 13 MY 2003–2008 vehicles. Conversely, the initial stiffness of the NPACS and the ECE R.44 seat cushions are greater than most of the measured vehicle seat cushions.

Since CRSs are tested on the FMVSS No. 213 standard seat assembly in a dynamic sled test, NHTSA also evaluated the dynamic stiffness of the various seat cushions. NHTSA compared the dynamic force-deflection (dynamic stiffness) of: The seat cushion in rear seats of 14 MY 2006–2011 vehicles, the seat foams specified in ECE R.44 and NPACS, and the seat cushion of the FMVSS No. 213 standard seat assembly.[38] The dynamic stiffness of the seat cushions and seat foams were determined using a pendulum impact device (PID), which consisted of an arm with a 152.4 mm (6 inch) diameter impactor (weighing 7.8 kg (17.2 lb)). The impactor was dropped at an average

[35] The current FMVSS No. 213 seat assembly has a seat back height of 20.35 inch (517 mm) and it does not have a head restraint.

[36] Wietholter, K., Louden, A., and Sullivan, L. ''Evaluation of Seat Foams for the FMVSS No. 213 Test Bench,'' June 2016 available in the docket for this NPRM.

[37] The NPACS consortium was funded in 2005 by governments of the United Kingdom, the Netherlands, Germany, the Generalitat of Catalonia, and five non-governmental organizations. The objectives of NPACS is to provide scientifically based EU wide harmonized test and rating protocols to offer consumers clear and understandable information about dynamic performance and usability of child restraint systems. NPACS is similar to NHTSA's New Car Assessment Program (NCAP) and the NCAP program administered in Europe (EuroNCAP), in that it is a voluntary consumer information program, rather than a binding regulation. The difference is that NPACS is designed to test CRSs, while NCAP focuses on vehicle performance.

[38] The ECE and NPACS foams were tested with the foams placed on a flat adjustable table, while the FMVSS No. 213 seat cushion was tested with the cushion placed on the FMVSS No. 213 standard seat assembly. The measured dynamic stiffness characteristics of the foam and cushion are not expected to differ significantly whether placed on a flat adjustable table or on a seat assembly.

impact velocity of 3.4 meters per second (m/s) (7.6 mph) on the seat cushion.[39] The PID was instrumented with a tri-axial accelerometer and an angular rate sensor to calculate the displacement and a uniaxial load cell to measure the force.

Figure 3 below shows that the ECE R.44 and NPACS foams were found to be stiffer than the vehicle fleet. The FMVSS No. 213 foam, tested on the standard seat assembly with a cover, is on the low end of the vehicle fleet rear seat stiffness.

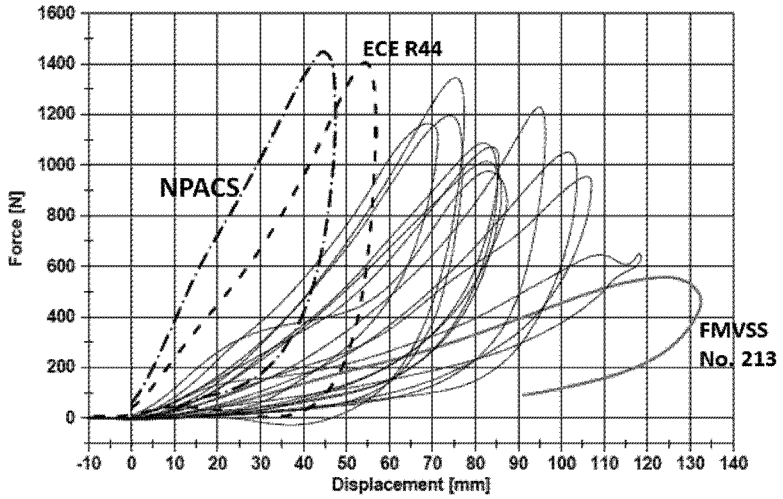

Figure 3. Dynamic force-displacement curves of seat cushions on vehicle rear seats (black thin) and ECE R.44 seat foam (black-dashed), NPACS seat foam (black-dashes and dots), and FMVSS No. 213 seat cushion (black bold).

Since the ECE R.44 and NPACS seat foam stiffness were found not to be representative of the current U.S. vehicle fleet (both quasi-static and dynamic stiffness), the agency developed a new seat cushion that would be representative. The foam used in the seat cushion was manufactured by The Woodbridge Group (Woodbridge),[40] and is referred to as the ''NHTSA-Woodbridge seat cushion'' in this NPRM. The NHTSA-Woodbridge seat cushion consists of the foam material covered by the cover used in test procedures of ECE R.44. The ECE R.44 cover material is a sun shade cloth made of poly-acrylate fiber with a specific mass of 290 (g/m^2) and a lengthwise and breadthwise breaking strength of 120 kg (264.5 lb) and 80 kg (176.3 lb), respectively.[41] The dynamic force-deflection of the NHTSA-Woodbridge standard seat cushion is shown below in Figure 4. NHTSA tentatively concludes that the stiffness of the NHTSA-Woodbridge seat cushion is satisfactorily representative of the average seat cushion stiffness found in the vehicle fleet (grey lines).

[39] *See* ''Evaluation of Seat Foams for the FMVSS No. 213 Test Bench,'' June 2016, *supra.* A 3.4 m/s (7.6 mph) test speed was used. This speed resulted in the impact device compressing the foam similar to how the foam was compressed in FMVSS No. 213 sled tests with various test dummies.

[40] The Woodbridge Group is a supplier of automotive seat foam, *http://www.woodbridgegroup.com.*

[41] The properties of this new seat cushion would be fully specified in a drawing package accompanying this document to enable interested parties to manufacture this seat cushion.

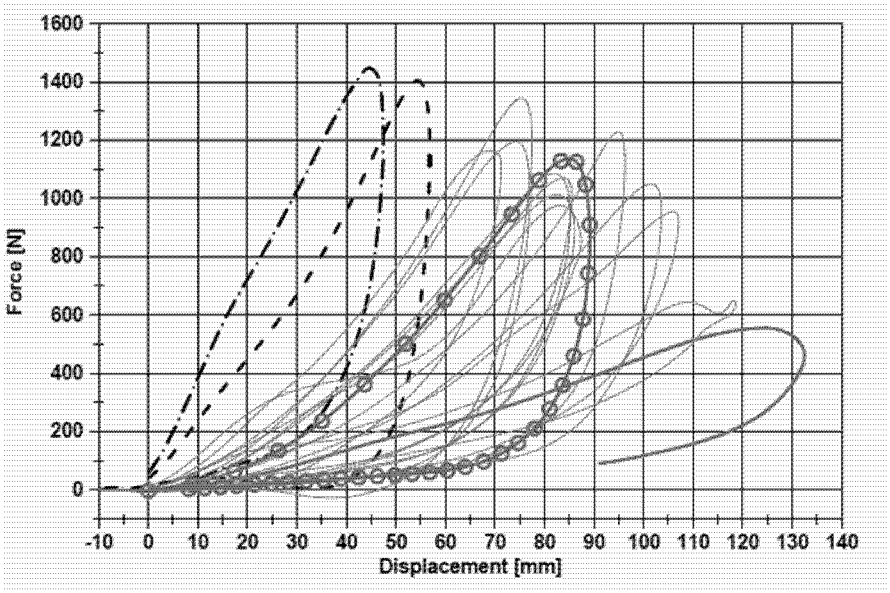

Figure 4. Dynamic force-displacement (stiffness) of ECE R.44 seat foam (black-dashed), NPACS seat foam (black-dashes and dots), FMVSS No. 213 seat cushion (dark grey solid), seat cushions on vehicle rear seats (light grey solid), and the proposed NHTSA-Woodbridge seat cushion (solid with circles).

To simplify procurement of the desired seat cushion foam, Table 1 below sets forth characteristics of the NHTSA-Woodbridge seat cushion foam as determined by the test methods specified in ASTM D–3574–03, ''Standard test methods for flexible cellular materials—slab, bonded, and molded urethane foam.'' ''IFD'' refers to the indentation force-deflection (IFD) test, which measures the force required for 25 percent, 50 percent, and 65 percent deflection of the entire product sample.[42] The compression force-deflection (CFD) test measures the force required to compress a sample of the foam (50 mm (1.96 inch) by 50 mm and 25 mm (0.98 inch) thickness) by 50 percent. Further details of seat cushion characteristics are available in the drawings that are in the docket for this NPRM.

TABLE 1—STIFFNESS OF THE NHTSA-WOODBRIDGE SEAT CUSHION FOAM

Foam characteristics	
Density	47 kg/m^3 (2.9 lb/ft^3).
IFD (25% deflection)	237 Newton (N) (53.2 lb).
IFD (50% deflection)	440 Newton (N) (99 lb).
IFD (65% deflection)	724 Newton (N) (162.7 lb).
CFD (50% compression)	6.6 kPa (137.8 lb/ft^2).

ii. Thickness of the Bottom Seat Cushion

NHTSA tentatively concludes that the bottom seat cushion foam should be 101.6 mm (4-inches) thick. A 101.6 mm (4-inch) thickness would be representative of the seat cushions on real world vehicles. The Vehicle Rear Seat Study found an average seat pan cushion thickness for both outboard and center seating positions of 90 mm (3.5 inches) with a standard deviation of 40 mm (1.5 inches), measured at the centerline of the seating position.[43] A 101.6 mm (4 inch) seat cushion foam thickness for the seat pan also has the advantage of simplifying procurement of the foam since foam standard specifications, such as IFD, are provided by the manufacturer in 101.6 mm (4 inches) samples, as specified in test method B1 of ASTM D3574. Thus, specifying a 101.6 mm (4 inch) foam thickness would streamline compliance testing because foam of that size would be relatively simple to procure.

iii. The Foam Is Suitable for Use in the Standard's Dynamic Test

The NHTSA-Woodbridge foam not only would be representative of foam in real world vehicles, it also appears suitable for use in the FMVSS No. 213 compliance test. One concern about any foam used on the standard seat assembly is whether the foam would ''bottom out'' (fully compress) on to the rigid backing during the demanding conditions of the sled test. The current soft FMVSS No. 213 seat cushion has a tendency to bottom out in tests of

[42] Foam products are typically characterized by their IFD and density values rather than by their dynamic performance.

[43] The current FMVSS No. 213 seat assembly seat pan cushion has a thickness of 152.4 mm (6 inch).

forward-facing CRSs using the heavier test dummies specified in FMVSS No. 213 (Hybrid III 6-year-old (HIII–6YO) and Hybrid III 10-year-old (HIII–10YO) child dummies).

The Agency conducted FMVSS No. 213-type sled tests to evaluate whether the NHTSA-Woodbridge seat cushion would bottom out when tested in a severe impact test (35 g at 56.3 kilometers per hour (km/h) or 35 mph) using heavy dummies restrained in a heavy CRS. NHTSA used two samples of NHTSA-Woodbridge seat cushions (101.6 mm (4 inches)) and the Graco Smart Seat in the test series. These pulse and test speeds were more severe than the test conditions specified in FMVSS No. 213.

NHTSA selected the Graco Smart Seat for this testing because the CRS represents a heavy CRS relative to current CRSs in the market, weighing 9.5 kg (21 lb) without its base and 14.9 kg (33 lb) with its base (the base is used in rear-facing and forward-facing modes). The CRS was tested in rear-facing and forward-facing modes (with the base) using a HIII–3YO dummy and HIII–6YO dummy, and tested in the belt-positioning booster seat mode (without the base) using a HIII–6YO and HIII–10YO.

In our tests, NHTSA considered the seat cushion to have bottomed out along the front edge if the seat cushion displacement exceeded 96.5 mm (3.8 inches). Seat cushion displacement at the front edge of the seat was measured by video analysis.[44] Cushion displacement was not measured in the tests with rear-facing CRSs as the high rotation of the CRS did not allow for an accurate measurement.

Test results are shown in Table 2 below. The NHTSA-Woodbridge seat cushion did not bottom out in any of the tests, even when subjected to the severe test conditions and when using a heavy test dummy and a heavy CRS.

Table 2. Test results of the NHTSA-Woodbridge seat cushion in sled tests with 56.3 km/h (35 mph) change in velocity and 35 g peak acceleration.

Test No.	CRS Model	Dummy	CRS Mode of Use	Restraint	Head Excursion	Knee Excursion (mm)	HIC	Chest Acceleration	Cushion Displacement (in)
8854	Graco Smart Seat	HIII-10YO	Booster	SB3PT	611	780	1,183	67	2.09
		HIII-6YO	Booster	SB3PT	578	n/a	1,293	76	2.62
8855	Graco Smart Seat	HIII-10YO	Booster	SB3PT	619	784	1,242	70	2.3
		HIII-6YO	Booster	SB3PT	593	n/a	1,370	74	2.71
8856	Graco Smart Seat	HIII-10YO	Booster	SB3PT	633	789	1,324	68	2.22
		HIII-6YO	Booster	SB3PT	625	733	1,690	78	2.84
8857	Graco Smart Seat	HIII-10YO	Booster	SB3PT	628	788	1,364	70	2.32
		HIII-6YO	Booster	SB3PT	617	731	1,718	82	2.7
8858	Graco Smart Seat	HIII-3YO	RF CRS	SB3PT	n/a	n/a	968	70	n/a
		HIII-6YO	FF CRS	LATCH	749	783	1,416	57	3.76
8853	Graco Smart Seat	HIII-3YO	RF CRS	SB3PT	na	n/a	208	61	n/a
		HIII-6YO	FF CRS	LATCH	657	n/a	1,208	57	3.74

Note: SB3PT means CRS attachment using three point seat belt, LATCH means CRS attachment using child restraint anchorage system, RF means rear-facing, and FF means forward-facing.

iv. Thickness of the Seat Back Foam

For the seat back cushion, NHTSA proposes to use the NHTSA-Woodbridge seat cushion foam with a 50.8 mm (2 inch) thickness. A 50.8 mm (2 inch) thickness would be representative of seat back cushions in the fleet. The Vehicle Rear Seat Study showed that the overall seat back cushion thickness for outboard and center seating positions was 76 mm (3 inches) with a standard deviation of 29 mm (1.14 inches), measured at the centerline of the seating position. The proposed seat back cushion thickness of 50.8 mm (2 inches) is within 1 standard deviation of the average seat back cushion thickness in the vehicle fleet.

Further, while NHTSA does not believe that the seat back cushion significantly affects a CRS's dynamic performance in the frontal sled test, the Agency recognizes that a seat back cushion on the thicker side could be a potential source of variability when testing CRSs with top tethers. When the tether is tightened, the back cushion can be compressed to varying degrees. Data do not indicate that differences in compression necessarily affect CRS

[44] ''Evaluation of Seat Foams for the FMVSS No. 213 Test Bench,'' June 2016, *supra.*

performance, but a 50.8 mm (2 inch) thick foam would reduce such differences and thus facilitate a more repeatable installation.

The Agency notes also that specifying that the foam thickness is 50.8 mm (2 inches) would streamline the FMVSS No. 213 compliance test. Foam manufacturers readily produce foams in 101.6 mm (4 inch) sections. A 101.6 mm (4 inch) thick foam slab can be easily cut into two 50.8 mm (2 inch) pieces to be used for the seat back.

6. Summary of Seat Geometry Features

Table 3 below shows a comparison of features of seating assemblies found in the vehicle fleet, and the proposed and current features of the FMVSS No. 213 test seat assembly.

Table 3. Geometry of the standard seat assembly

		Average	Standard Deviation	Minimum	Maximum	Current FMVSS No. 213	ECE R.44/Takata	Upgraded FMVSS No. 213
Seat Back Angle (deg)		20	4	9	28	20	20	20
Seat Pan Angle (deg)		13	4	7	23	15	15	15
Seat Back Thickness (mm)		76	29			152.4	70	50.8
Seat Pan Thickness (mm)		90	40			152.4	140	101.6
Seat Pan Depth/Length [mm]		406	38	330	514	416	438	412
Seat Back Height [mm]	**With Head Restraint**	688	76	540	849			n/a
	Without Head Restraint	578	60	450	778	517	432	573

d. Seat Belt Anchorage Locations

FMVSS No. 213 requires CRSs (other than belt-positioning booster seats) to meet the standard's performance requirements while attached with a 2-point belt (lap belt).[45] In some tests, a top tether may be used to supplement the belt attachment. The current seat assembly has a 2-point belt for testing CRSs.

To make FMVSS No. 213's standard seat assembly more representative of the vehicle fleet, the NPRM proposes replacing the 2-point belt with a 3-point belt. (This NPRM also proposes requiring CRSs to be tested under FMVSS No. 213 while attached to the standard seat assembly using the 3-point belt.) Three-point belts were first required in outboard rear seats of passenger vehicles starting in MY 1990 and in trucks and multipurpose passenger vehicles (including passenger vans and SUVs) starting in MY 1992. Three-point belts in center rear seats were phased-in between September 1, 2005 and September 1, 2007. The on-the-road passenger vehicle fleet is now predominantly comprised of vehicles with 3-point belts in all rear seating positions, and more and more vehicles will be so equipped in the near future. Therefore, to test CRSs with what will be the most common seat belt configuration in the vehicle fleet, the agency proposes to incorporate a 3-point belt in the proposed standard seat assembly.[46]

NHTSA began its assessment of where the seat belt anchorages should be located on the updated FMVSS No. 213 standard seat assembly by considering anchor location requirements in FMVSS No. 210, ''Seat belt assembly anchorages.'' [47] Figure 5 shows the side view of the proposed bench, the proposed location of the lap belt anchors and the FMVSS No. 210 corridor. This figure shows that the lap belt anchor locations on the proposed bench are within the FMVSS No. 210 corridor.

[45] Belt-positioning booster seats are currently tested with a 3-point belt system, as these child restraint systems are designed for use with 3-point belts.

[46] Incorporating a 3-point belt on the standard seat assembly would harmonize FMVSS No. 213 with the counterpart Canadian regulation (Canadian Motor Vehicle Safety Standard (CMVSS) No. 213, ''Motor Vehicle Restraint Systems and Booster Seat Safety Regulations''). While the 3-point belt anchorage locations in the Canadian standard seat assembly are different than those in this proposal, Transport Canada is considering harmonizing its standard with NHTSA's proposed changes.

[47] FMVSS No. 210 specifies a location corridor for the lap belt anchorages which is between 30 and 75 degrees from the horizontal at the H-point.

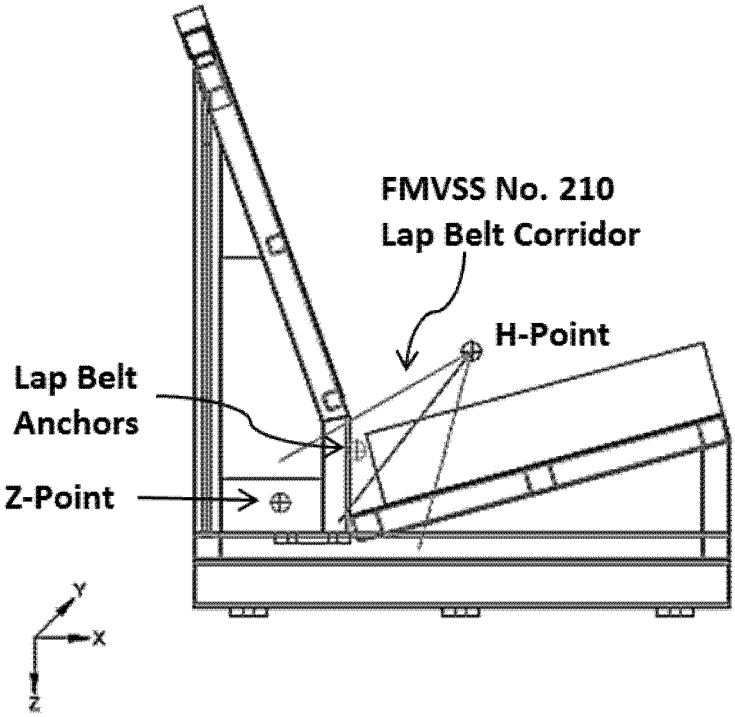

Figure 5. Proposed standard seat assembly depicting the FMVSS No. 210 corridor and the lap belt anchor location.

NHTSA also considered the data on real-world anchorage locations from the Vehicle Rear Seat Study. Table 4 below shows the average position along with the standard deviation of the lap and shoulder belt anchorages measured in the 24 vehicles surveyed. Measurements were made with respect to Point A of the SGMF. The table also shows similar measurements of the seat belt anchorage locations on the current FMVSS No. 213 standard seat assembly, the proposed seat assembly, along with those in ECE R.44 and NPACS.

Table 4. Lap and shoulder belt anchor location from the 24-vehicle survey and that measured on the current FMVSS No. 213 seat assembly, proposed FMVSS No. 213 seat assembly, ECE R.44 seat assembly, and the NPACS seat assembly. All measurements are distance in millimeters from point A of the SGMF.

		24 Vehicle Survey		Current FMVSS No. 213	Proposed FMVSS No. 213	ECE R.44	NPACS
		Average	Stand. Dev.				
Shoulder Belt Location	Aft	350	118	350	393	216	213
	Lateral	247	57	247	244	302	298
	Vertical	581	72	690	634	500	514
Lap Belt Location	Fore/Aft	-57	61	-	-77	-	-
	Lateral	211	54	-	225	-	-
	Vertical	-44	82	-	-89	-	-
Distance Between Lap Belt Anchors	Outboard	450	36	427	449	-	-
	Center	356	60	400	-	-	-

NHTSA also located the anchorages to avoid interference with the seat assembly structure in an FMVSS No. 213 compliance test. Interaction of the seat belt with the vehicle seat assembly, or the child restraint with a seat belt anchorage, could introduce variability in the test results. The shoulder belt anchor is located more rearward and higher than the average location from the vehicle survey to avoid interaction of the shoulder belt with the seat back cushion, and interaction of large high back boosters with the shoulder belt anchorage hardware. The lap belt anchors are located to be more rearward and lower than the average location from the vehicle survey, to avoid interaction of the seat belt and seat belt hardware with the seat cushion.

Even with these adjustments, as shown in Table 4, *supra,* the fore/aft, lateral, and vertical positions of the lap and shoulder belt anchorages relative to point A for the proposed seat assembly are within one standard deviation of the average values found in the vehicle survey.

e. Child Restraint Anchorage System Locations

FMVSS No. 213 also requires CRSs to meet the standard's performance requirements while attached by way of a child restraint anchorage system (S5.3.2).[48] In some tests, a top tether may be used to supplement the lower anchorage attachment (S6.1.2(a)(1)).

The standard seat assembly of FMVSS No. 213 has a child restraint anchorage system consisting of two lower anchor bars and a top tether anchor. The child restraint anchorage system is configured as specified by FMVSS No. 225, ''Child restraint anchorage systems,'' for systems installed on vehicles. FMVSS No. 225 requires lower anchors to be 280 mm (11 inches) apart and have specific anchor geometry.

In the Vehicle Rear Seat Study NHTSA measured the location of the lower anchor and the tether anchor in the vehicles. Table 5 below shows the location of the lower anchors and the tether anchor from Point A of the SGMF in the 24-vehicle survey, and that of the proposed FMVSS No. 213 seat assembly. The lower anchors of the proposed standard seat assembly have a 280 mm (11 inch) lateral spacing as specified in FMVSS No. 225. Each lower anchor metal bar is 37 mm (1.45 inches) long.

The location of the lower anchorages selected for the proposed seat assembly is slightly lower than the average location in the vehicle survey.[49] NHTSA located the anchorages slightly lower because anchorages positioned higher may cause some CRS attachments to interfere with the seat back cushion. Also, the Agency was concerned that CRSs designed with rigid attachments (that attach to the lower anchor bars without use of webbing) may adopt an incorrect installation angle when the bars are higher.

NHTSA also chose an anchorage location more forward (closer to the seat bight) than the average from the Vehicle Rear Seat Study. The more forward location was selected to make it easier to install the CRS on the seat assembly in a compliance test, and to measure the tension in the belt webbing used for the lower anchorage attachment. Further, NHTSA anticipates that lower anchorages will likely be more forward than in current vehicles if future vehicles employ the design concepts discussed in NHTSA's 2015 MAP–21 NPRM, *supra,* to improve the ease-of-use of child restraint anchorage systems.[50] Thus, while the proposed

[48] Some CRSs, such as belt-positioning seats and harnesses, are excluded from this requirement.

[49] The vertical location of the lower anchors in the proposed seat assembly is just 2 mm lower than one standard deviation below the average vertical location of lower anchors in the vehicle fleet.

[50] NPRM to improve the ease-of-use of child restraint anchorage systems. 80 FR 3744, January 23, 2015. Docket No. NHTSA–2014–0123. The

Continued

lower anchorage location in the aft direction is not within one standard deviation of the average in the current vehicle fleet, NHTSA believes that the fleet will be changing. The proposed aft location of lower anchors for the upgraded standard seat would be representative of the average future vehicle fleet.

NHTSA also used the Vehicle Rear Seat Study to position the tether anchorage on the new standard seat assembly. While FMVSS No. 225 permits the tether anchorage to be in a wide area in the vehicle, the study found that the tether anchorages are mostly centered along the designated seating position (DSP) centerline. Also, the anchorages are found in two main areas: The seat back at different heights (mainly in SUVs, hatchbacks, vans, and trucks) and the package shelf (mainly in sedans and coupe type vehicles). In a few vehicles, the tether anchorage is on the rear wall (pickup trucks) or the roof. Based on sales volumes, the number of vehicles with tether anchorages in the package shelf is about the same as those with tether anchorages in the seat back.

The Agency proposes to locate the tether anchorage in the seat back area. NHTSA believes that locating the anchorage on the seat back, rather than in a position representing the package shelf, results in a slightly more demanding test as anchoring a CRS to the former causes more tether strap webbing to be used than if the anchor were directly aft of and closer to the CRS. More webbing used in the test may slightly increase the likelihood that higher head excursions could result, as webbing has a natural tendency to elongate in the sled test.

The location of the tether anchorage in the proposed standard seat assembly is within one standard deviation of the average found by the Vehicle Rear Seat Study as shown in Table 5.

TABLE 5—LOWER ANCHORS AND TETHER ANCHOR LOCATION FROM THE 24-VEHICLE SURVEY AND THOSE IN THE PROPOSED FMVSS NO. 213 STANDARD SEAT ASSEMBLY

[All measurements are in millimeters from point A of the SGMF]

		Average from vehicle survey	Proposed FMVSS No. 213
Lower Anchors	Aft	100 ± 21	58
	Lateral	137 ± 29	140
	Vertical (−) Below point A	−12 ± 24	−38
Tether Anchors (Seat Back Position)	Aft	280 ± 88	330
	Lateral	0 ± 44	0
	Vertical (−) Below point A	140 ± 281	133

IV. Installing CRSs With a Type 2 Belt Rather Than a Type 1 Belt

To drive continued effective CRS performance in today's vehicles, NHTSA proposes to require all CRSs to meet the performance requirements of FMVSS No. 213 while attached to the seat assembly with a Type 2 (lap/shoulder) belt. Currently, CRSs are sled tested while attached with a Type 1 (lap) belt.[51] With the prevalence of Type 2 belts in the rear seats of vehicles sold and on the road today, testing CRSs with the type of seat belt caregivers would be using better ensures the representativeness of the compliance test. Test data do not indicate any significant difference in performance in current child restraint designs when installed using a Type 1 versus a Type 2 belt.[52]

Adopting a requirement that CRSs meet the standard when tested with a Type 2 belt would be consistent with Canada's CMVSS No. 213, *supra.* Since 2010, Transport Canada tests CRSs equipped with internal harnesses by installing them with a Type 2 belt.[53]

V. Denial of Petition Regarding a Floor

On January 28, 2011, Volvo petitioned NHTSA requesting that the Agency amend FMVSS No. 213 by: (1) Updating the seat cushion of the sled standard seat assembly; (2) allowing a lap/shoulder belt fastening in the test procedure; and (3) adding a floor to the sled fixture used in the compliance test procedure. Volvo suggests that these amendments would make FMVSS No. 213 more reflective of real-world conditions and facilitate ''rearward-facing child seating for as long as practicable.'' Volvo states that it offers add-on and built-in booster seats in the U.S., but does not offer child restraints for children under the age of 4 ''primarily because of the inherent problems in [FMVSS] No. 213 and in showing compliance with this standard for larger rearward-facing child restraints.''

The requests of items (1) and (2) above are being met by this rulemaking. The request for adding a floor (item (3)) is denied. NHTSA discusses this request below.

Volvo believes that the most effective way to fasten a rear-facing child restraint is to use the seat belts or the ISOFIX[54] anchors together with a support leg extending down to the floor of the vehicle. Volvo states that this method of attachment has been available to Volvo and child restraint manufacturers in countries outside the U.S. for many years and has ''proven to be very practicable.'' Volvo states: ''For the US, it is not, however, possible to certify this solution to FMVSS 213 since this standard does not offer a floor for the sled specified in the test procedure.'' Volvo states that ''the addition of the floor in the sled used in standard FMVSS 213 appears to be well justified since all cars in the modern car fleet would have a floor between the first and second rows of seats.''

NHTSA is denying the request. The test parameters of the FMVSS No. 213 sled test replicate the real-world vehicle features and crash factors that bear on a child restraint's performance in protecting a child in the real world. Included in those test parameters are the test seat assembly (seat geometry, seat

NPRM proposes to require vehicle manufacturers to place the anchorages within 2 centimeters from the seat bight.

[51] NHTSA is not changing FMVSS No. 213's requirement that covered CRSs must also meet the standard's performance requirements while attached using a child restraint anchorage system.

[52] See results of test numbers 8917, 8922, 8919, 8923, 8929 and 8931 in Table 11 and test numbers 8917, 8922, 8919 and 8923 in Table 12 of this NPRM.

[53] P.C. 2010–545 April 29, 2010. 2010–05–12 *Canada Gazette Part II, Vol. 144, No. 10.*

[54] ISOFIX is a system for connecting child restraint systems to vehicles which consists of two rigid anchorages in the vehicle, two corresponding rigid attachments on the child restraint system and a means to limit the pitch rotation of the child restraint system.

cushion characteristics), methods of child restraint attachment to the test seat assembly (lap belt, lap/shoulder belt, and child restraint anchorage system), the standard's limits on head excursion, the sled crash pulse, and the test velocity. The test parameters are also chosen and designed to reflect how child restraints are actually *used* in the real world. Thus, as examples, the standard requires a universal and standardized means of attaching CRSs to reflect that CRS are used interchangeably in all models of vehicles. The standard's test parameters include a test in which the CRS is installed without attaching a tether, because non-use of a top tether is prevalent.

Studies from NHTSA's National Child Restraint Use Special Study (NCRUSS),[55] Safe Kids,[56] and the Insurance Institute for Highway Safety (IIHS)[57] have shown that tether use is still low in the field. NCRUSS found that the overall tether use was 42 percent. Safe Kids found that overall tether usage in forward-facing CRSs with internal harnesses was only 29 percent. Tether use was 45 percent when the CRS was attached with lower anchorages and 15 percent when the CRS was attached with seat belts. IIHS researchers analyzed data from 479 vehicle observations and found that the top tether was used only 56 percent of the time. With prevalent tether nonuse in the field, NHTSA requires forward-facing CRSs to meet minimum performance requirements while untethered in an FMVSS No. 213 compliance test.

A generic floor would serve no purpose in the FMVSS No. 213 compliance test. FMVSS No. 213 standardizes the method of attachment to the vehicle seat and requires CRSs to meet the FMVSS No. 213's dynamic performance requirements when attached to the test seat assembly using the standardized attachments (seat belt assembly; child restraint anchorage system). Standardization increases the likelihood of correct installation of child restraints, as consumers do not need to learn novel ways of installing child restraints each time a new child restraint is used. Standardization also ensures that the minimum level of protection provided by FMVSS No. 213 will be provided by each child restraint installed in every vehicle. The standardized attachment does not involve the vehicle floor. The presence of a floor structure on the FMVSS No. 213 seat assembly is not a matter of significance for the standard's compliance test as CRSs are tested today.

In asking for a floor, Volvo impliedly asks that CRSs should be permitted to use a ''support leg'' in the test to meet the minimum performance requirements of the standard. The Agency denies this request for several reasons. FMVSS No. 213 is written to prevent vehicle-specific CRSs, since the risk of misuse in a vehicle for which a CRS is not designed is high in this country. This is a concern when the leg is needed to meet the minimum performance requirements of the standard.[58] Consumers might use the CRS in vehicles that may not be compatible with the use of a leg; using the CRS in a vehicle whose floor differs from the Volvo floor could have negative safety consequences when the floor attachment is needed to meet the minimum performance requirements of the standard. Or, consumers may not properly use a support leg. They might forget to use it, or might not attach it correctly to the vehicle floor. Data from NHTSA's NCRUSS and IIHS, discussed above, show that there already exists a problem of consumers not using the CRS top tether. Volvo did not provide any information showing that consumers in this country would use the leg correctly.

NHTSA also notes that Volvo did not suggest how the floor should be specified on the standard seat assembly. Under the FMVSSs, the strength and configuration of the vehicle's belt system and child restraint anchorage system are standardized to ensure the vehicle attachments are sufficient to withstand the occupied CRS's dynamic loads during a crash. The attachment strategies specified in the FMVSSs do not involve compressive loading to the vehicle floor, such as resulting from a support leg of a CRS. The FMVSSs also have no performance requirements for the vehicle floor to ensure stable installation of a support leg and sufficient rigor to withstand loading from a leg during a crash. NHTSA is concerned that the floor of some vehicles, such as those with a storage compartment under the seat, may not be strong enough to withstand the dynamic loads from a support leg. The petitioner's request to allow the floor to contribute to the performance of the CRS introduces unacceptable uncertainty that the CRS would provide the requisite minimum protection in the real world.

By stating that only the standardized means of attachment will be used in the compliance test, FMVSS No. 213 ensures that the performance of the child restraint in providing the minimum level of safety mandated by the standard is not dependent on a supplementary device that is suitable for only certain vehicle makes and models and that may or may not be used by the consumer. Since a support leg is not used in the standard's compliance test, a floor on the seat assembly is unnecessary. Accordingly, NHTSA denies the request to add a floor to the sled used in the FMVSS No. 213 compliance test.

VI. No Safety Need to Increase Crash Pulse

a. Introduction

As part of NHTSA's effort to ensure FMVSS No. 213 continues to drive effective CRS performance in today's vehicle environment, the Agency examined the sufficiency of the FMVSS No. 213 sled acceleration pulse and 48 km/h (30 mph) test velocity used in compliance testing. NHTSA has evaluated this aspect of the test procedure in each of the Agency's recurring retrospective reviews of the standard.

In 2003, NHTSA considered increasing the severity of FMVSS No. 213's sled acceleration pulse but decided against such a change. Instead, the Agency redesigned the pulse and established a corridor around it to allow the Agency to conduct compliance tests at velocities closer to the 48 km/h (30 mph) velocity specified in the standard.[59]

[55] National Child Restraint Use Special Study, DOT HS 811 679, *https://crashstats.nhtsa.dot.gov/Api/Public/ViewPublication/812142*. NCRUSS is a large-scale nationally-representative survey that involves both an inspection of the child passenger's restraint system by a certified child passenger safety technician and a detailed interview of the driver. The survey collected information on drivers and on child passengers ages 0–8 years between June and August 2011.

[56] ''A Look Inside American Family Vehicles 2009–2010,'' Safe Kids USA, September 2011. (*http://www.safekids.org/assets/docs/safety-basics/safety-tips-by-risk-area/sk-car-seat-report-2011.pdf.)* The study was based on 79,000 observations from ''car seat check'' events and appointments that took place between October 1, 2009 and September 30, 2010.

[57] Eichelberger, A. H., Decina, L.E., Jermakian, J. S., McCartt, A. T., ''Use of top tether with forward facing child restraints: Observations and driver interviews,'' IIHS, April 2013. IIHS surveyed and collected data at roughly 50 suburban sites near Fredericksburg, VA, Philadelphia, PA, Seattle, WA, and Washington, DC Shopping centers, recreation facilities, child-care centers, car seat checkpoints and healthcare facilities were among the locations.

[58] FMVSS No. 213 does not prohibit Volvo or any other manufacturer from providing a support leg as long as the child restraint meets the standard's minimum performance levels without the support leg.

[59] Under FMVSS No. 213 (S6.1.1(b)(1)), the dynamic test is at a velocity change of 48 km/h (30

Continued

In that 2003 rulemaking proceeding, NHTSA requested comment on the corridor for the acceleration pulse and on the severity of the crash pulse. Commenters from all segments of the child passenger safety community were almost unanimous opposing an increase in the severity of the crash pulse. Commenters were concerned that an increase in the severity of the pulse would lead to higher costs and reduced usability of child restraints with minimal or no increase in benefits.[60]

After reviewing the comments and other factors, NHTSA decided not to increase the severity of the sled acceleration pulse. The Agency determined that increasing the severity could necessitate the redesign of many CRSs and increase costs of CRSs without a commensurate safety benefit. In that rulemaking, the Agency determined that the FMVSS No. 213 sled acceleration pulse was severe, similar to rigid barrier crash test accelerations of SUVs and trucks. Its severity was appropriately high to ensure that CRSs would maintain their structural integrity in just about all crashes involving children, and limit forces to the child's head, neck, and torso to reasonable levels, no matter what vehicle the child is in.

In preparing this NPRM, NHTSA again investigated the sufficiency of the FMVSS No. 213 sled acceleration pulse, particularly vis-à-vis an evolving occupant protection environment. Since the 2003 final rule, the stringency of the belted test of FMVSS No. 208, ''Occupant crash protection,'' was increased from 48 km/h (30 mph) to 56 km/h (35 mph),[61] which raised the question whether FMVSS No. 213's frontal test speed should be increased as well. In addition, more vehicles have become stiffer and/or smaller with high G crash acceleration pulses, and new kinds of CRSs have emerged for older and heavier children. With those developments in mind, NHTSA reevaluated the FMVSS No. 213 sled acceleration pulse and test velocity.

Guiding Principles

As stated earlier in this preamble, real world data show CRSs to be highly effective in reducing fatalities and injuries in motor vehicle crashes. NHTSA estimates that for children less than 1 year old, a CRS can reduce the risk of fatality by 71 percent when used in a passenger car and by 58 percent when used in a pickup truck, van, or SUV (light truck). Child restraint effectiveness for children between the ages 1 to 4 is 54 percent in passenger cars and 59 percent in light trucks.[62] These effectiveness estimates would be further enhanced if the misuse rate of CRSs is reduced.

Given that CRSs are already highly effective, the Agency carefully considers the unintended impacts of any rulemaking purporting to enhance CRS safety. Any enhancement that would markedly raise the price of the restraints could potentially have an adverse effect on their sales. The net effect on safety could be negative if the effect of sales losses exceeds the benefit of the improved performance of the restraints that are purchased. In addition, NHTSA also considers the effects of improved performance on the ease of using child restraints. If the use of CRSs becomes overly complex or unwieldy, the dual problems of misuse and nonuse of CRSs could be exacerbated. Thus, in considering the safety impacts of its efforts on FMVSS No. 213, the agency weighs those improvements against impacts on the price of restraints and CRS ease-of-use.

With these guiding principles in mind, the agency evaluated the sufficiency of the current FMVSS No. 213 sled acceleration pulse and test velocity. NHTSA analyzed real world crash data, the regulations of other countries, and sled test data from tests the Agency conducted on the performance of CRSs when tested to different crash test speeds and sled acceleration pulses.

b. Safety Need—Crash Data Analysis

To learn more about the crash speeds of frontal crashes in which children are involved and to compare these to crashes involving older occupants, NHTSA analyzed the NASS–CDS data files for years 2008 to 2012 to determine the change in velocity distribution of non-rollover frontal crashes. During this 5-year period, there were 754 restrained children 12 years old (12–YO) and younger who were occupants of light passenger vehicles involved in non-rollover frontal crashes with a known (estimated) change in velocity. During this same 5-year period, there were 7,749 older occupants (restrained occupants older than 12 years of age) who were occupants of light passenger vehicles involved in non-rollover frontal crashes with a known (estimated) change in velocity.

The analysis found that 99.47 percent of restrained children 12–YO and younger were involved in frontal crashes of speeds of 48 km/h (30 mph) or less, and 99.57 percent of such children were involved in frontal crashes of speeds of 56 km/h (35 mph) or less. In comparison, for older restrained occupants involved in frontal crashes, 98.5 percent and 99.27 percent were in crashes of speeds of 48 km/h (30 mph) or less and 56 km/h (35 mph) or less, respectively (Table 6).

TABLE 6—CHANGE IN VELOCITY IN TOWAWAY, NON ROLLOVER, FRONTAL CRASHES WITH KNOWN CHANGE IN VELOCITY VALUES

[NASS–CDS 2008–2012] *

	ΔV ≤30 mph (%)	ΔV ≤35 mph (%)
Restrained Children (0–12 yrs)	99.47	99.57
Other Restrained Occupants	98.5	99.27

* unweighted data (754 restrained children 0–12 years old, 7,749 others)

These data indicate that the 48 km/h (30 mph) sled test in FMVSS No. 213 ensures that CRSs are exposed to a crash condition which is at least as severe as 99.47 percent of such real-world incidents involving restrained children ages 0 to 12–YO, and that an increase in test speed to 56.3 km/h (35 mph) will only marginally increase the crashes covered by the standard. In contrast,

mph) ''with the acceleration of the test platform entirely within the curve shown in . . . Figure 2A.''

[60] To illustrate, SafetyBeltSafe commented that a velocity increase would make products more expensive and would not significantly improve CRS performance in the real world. The University of Michigan Transportation Research Institute (UMTRI) stated that its review of NASS data files indicated that a 48 km/h (30 mph) change in velocity was more severe than at least 98 percent of frontal impact crashes involving children nationwide. UMTRI was concerned that increasing the velocity of the test is not likely to increase safety, but will increase consumer cost of CRSs and may lead to CRS designs that could make the restraints less effective or more easily misused at lower severity crashes, which occur much more frequently. IIHS stated that its review of NASS cases showed that CRSs designed to pass the current 48 km/h (30 mph) sled test are providing very good protection to children in frontal crashes and that there was no evidence that designing CRSs to withstand higher crash forces could have prevented or mitigated any of the serious or fatal injuries in the reviewed NASS cases. The only commenter supporting an increase in the FMVSS No. 213 pulse was ARCCA Inc., which believed that the standard's pulse led to test velocities that were less severe than 48 km/h (30 mph) rigid barrier vehicle crash test acceleration pulses. (Docket No. NHTSA–2002–11707.)

[61] FMVSS No. 208 sets forth vehicle frontal crash tests for evaluating occupant protection for adult passengers. Examples of vehicle countermeasures used to meet the requirements include lap/shoulder seat belts, belt tensioning devices, frontal head and thorax air bag systems, improved passenger compartment integrity and vehicle front-end crumple zones.

[62] Traffic Safety Facts—Children 2013 Data. *https://crashstats.nhtsa.dot.gov/Api/Public/ViewPublication/812154.* Last accessed on August 23, 2016.

98.5 and 99.27 percent of older restrained occupants are involved in crashes with a change in velocity up to 48 km/h (30 mph) and 56.3 km/h (35 mph), respectively. The fraction of restrained children with change in velocity over 48 km/h (30 mph) (0.53 percent) is lower than that for older restrained occupants (1.5 percent), and this difference between the two groups is statistically significant.[63] Likewise, the estimate for the fraction of restrained children with change in velocity over 56 km/h (35 mph) (0.43 percent) is lower than that for older occupants (0.73 percent), and this difference between the two groups is statistically significant.

These results reveal that restrained children are more involved in lower-severity crashes than older occupants. The percentage of frontal crashes of restrained children covered by the 48 km/h (30 mph) sled test (99.47 percent) is greater than the percentage of frontal crashes of older occupants (99.27 percent) covered by the 56 km/h (35 mph) vehicle crash test. The data show that the current FMVSS No. 213 48 km/h (30 mph) sled test velocity does not equate to a diminished level of safety for restrained children as compared to older vehicle occupants. In fact, it could be argued that FMVSS No. 213's 48 km/h (30 mph) test provides a higher degree of protection than the 56 km/h (35 mph) test of FMVSS No. 208 in terms of the breadth of the crashes they cover involving the relevant restrained population.

c. Hard Copy Review of Case Files

While a 56 km/h (35 mph) change in velocity would only cover an additional 0.1 percent of the crashes involving restrained children, NHTSA undertook a review of case files to determine whether a change in velocity could have possibly prevented fatal or serious injury to children involved in the additional 0.1 percent of crashes. Among children 0–12 YO restrained by CRSs in passenger vehicles, about 72 are killed in crashes annually and about 634 sustain AIS 2+ injury.[64] To better understand the reason for injuries and fatalities among CRS-restrained children in frontal crashes, the agency reviewed all NASS–CDS and Crash Injury Research and Engineering Network (CIREN)[65] data files for the years 2003 to 2013 for instances in which children 12–YO and younger in CRSs[66] in rear seats of light passenger vehicles sustained AIS 3+ injuries in frontal crashes without rollover. Only those cases in which the change in velocity exceeded 40 km/h (25 mph) were considered to eliminate low severity impacts where injuries were likely due to factors such as the child being improperly restrained, or cases where information was unavailable to assess crash severity and cause of injury.

There were 18 cases that met these selection criteria for the years 2003–2013. Table 7 shows a summary of the case review of the 18 cases.

TABLE 7—NASS–CDS & CIREN (2003–2013) CASE REVIEW: CHILDREN 12–YO AND YOUNGER RESTRAINED IN CRSS WITH AIS 3+ INJURIES IN FRONTAL IMPACT WITHOUT ROLLOVER WITH A CHANGE IN VELOCITY GREATER THAN 40 KM/H (25 MPH)

Cause of AIS 3+ Injuries	Total	Percentage
Gross CRS Misuse	7	39
Exceedingly Severe	4	22
Intrusion of the Front Seat Back	3	17
Cargo intrusion	1	6
Bracing	1	6
Could not be determined	2	11
Total	18	100

The most frequent cause of AIS 3+ injury to children was gross CRS misuse. Gross CRS misuse included children restrained in a CRS intended for larger/heavier children, infant seat with the carrying handle improperly stowed, booster seats with only the lap belt used to restrain the child, and booster seat with no seat belt used. The second most frequent cause of AIS 3+ injury to CRS-restrained children was that the crash was exceedingly severe (beyond the severity of a 56 km/h (35 mph) frontal crash).

In three cases, the front seat back intruded into the restrained child's occupant space resulting in head or leg injuries. In one case, the child's right humerus was fractured due to intrusion of cargo from the trunk of the vehicle. In another case, the child's arms were braced against the front seat back before the impact and the child sustained arm fractures during the crash. The cause for injury in the remaining two cases could not be determined due to lack of evidence and/or missing or unknown data.

This hard copy case review indicates that AIS 3+ injuries to CRS-restrained children in frontal crashes are due to CRS misuse (39 percent), excessively severe crashes (beyond 56 km/h (35 mph) crash severity) (22 percent), and other factors unrelated to crash severity or CRS misuse. There is no indication that a CRS designed to meet a 56 km/h (35 mph) FMVSS No. 213 compliance test would have prevented any of these injuries.

The findings from the hard copy review are in accordance with the findings from NHTSA's National Child Restraint Use Special Study (NCRUSS) that shows that car seat and booster seat misuse in the field is 46 percent, and that CRS misuse is a more frequent causal factor for AIS 3+ injury to restrained children than the severity of the crash.[67]

[63] The analysis was conducted with unweighted data assuming random sample selection.

[64] NASS–CDS data file 2005–2009, 79 FR 4577.

[65] NHTSA's Crash Injury Research and Engineering Network (CIREN) combines data collection with professional multidisciplinary analysis of medical and engineering evidence to determine injury causation in every crash investigation conducted.

[66] Children in CRSs include children that may or may not be restrained by the internal harness of a CRS or the seat belt when using a booster seat.

[67] "Findings of the National Child Restraint Use Special Study (NCRUSS)," DOT HS 812 142. May 2015. NCRUSS is a large-scale nationally-representative survey that involves both an inspection of the child passenger's restraint system by a technician and a detailed interview of the driver. The survey collected information on drivers and their child passengers of ages 0–8 years between June and August 2011. NCRUSS data were collected at 24 primary sampling units (PSUs) across the country. The PSUs were previously established from a separate ongoing data collection effort, the National Automotive Sampling System (NASS). The PSUs are defined geographically, similar to cities or counties. The PSUs were selected to cover urban, rural, and suburban environments and are located in 17 different States.

d. Globally, All Regulations Use a 30 MPH Test Speed

In considering the sufficiency of the FMVSS No. 213 test speed, NHTSA examined the regulations for child restraint systems that are implemented in other countries. The review found that the frontal sled tests in all the CRS standards simulate a 48–50 km/h (30—31.0 mph) crash (see Table 8).

TABLE 8—TEST SPEED OF FRONTAL SLED TESTS IN CRS STANDARDS FROM DIFFERENT COUNTRIES

Standard	Type of test	Speed km/h	Speed mph
UNECE R.44 [68] & R.129 [69] (Europe)	Sled Test	50	31.0
Australia AS 1754	Sled Test	49	30.4
FMVSS/Canadian MVSS No. 213	Sled Test	48.2	30.0

At the same time, the crash pulse used in FMVSS No. 213 appears more severe than that of the European and Australian regulations. Generally, for a given crash speed, vehicle crash acceleration pulses with higher peak acceleration, higher initial rise rate, and shorter duration are more severe and demanding on restraint systems. The peak acceleration of the FMVSS No. 213 sled pulse is comparable to that of the sled pulses used in other countries. The FMVSS No. 213 sled pulse corridor has a very rapid rise reaching peak acceleration much sooner than the ECE R.44/R.129 or the Australian regulations. The rapid initial rise in acceleration and the short duration of the FMVSS No. 213 acceleration pulse is also characteristic of more recent smaller passenger car models with stiff front-ends in the U.S. fleet. The duration of the FMVSS No. 213 pulse and the Australian regulation are comparable but much shorter than the ECE R.44/R.129. The Canadian standard (CMVSS No. 213) uses the same sled acceleration pulse corridor as that specified in FMVSS No. 213.

Figure 6 shows the frontal sled pulses used in FMVSS/CMVSS No. 213, UNECE R44/R129 and the Australian regulations.

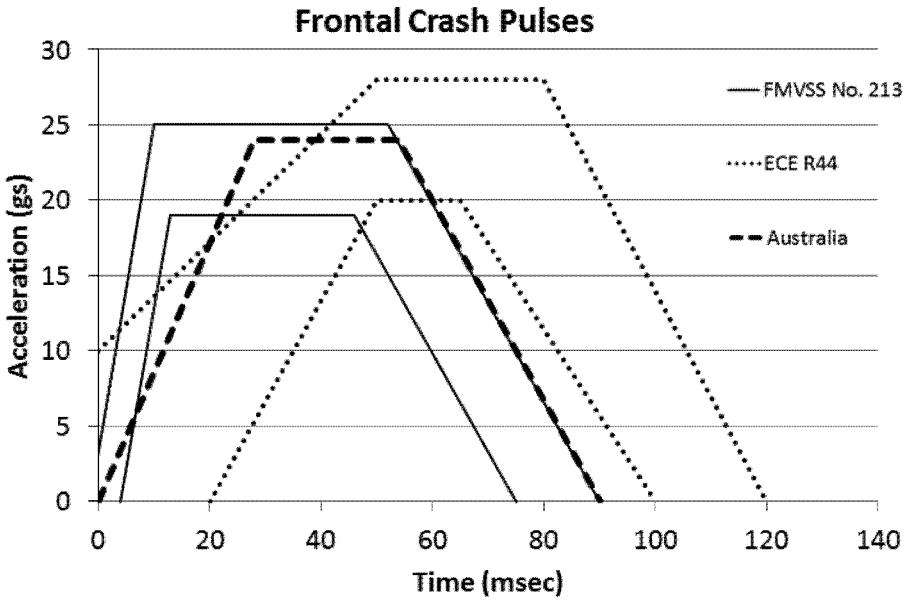

Figure 6. Frontal sled test acceleration pulse profile for different CRS standards (FMVSS No. 213, ECE R.44/R.129 and Australian Regulation)

e. Sled Testing of CRSs

NHTSA tested different kinds of CRSs in FMVSS No. 213-type sled tests at 56.3 km/h (35 mph) and 48 km/h (30 mph) change of velocities. The Agency tested the CRSs on a sled assembly comprising the current FMVSS No. 213 standard seat assembly frame [70] and the NHTSA-Woodbridge seat cushion. To assess how CRSs would perform when subjected to a 56 km/h (35 mph) pulse, the agency developed five pulses using passenger vehicle crash pulses of vehicles tested to the 56 km/h (35 mph) frontal barrier test of NHTSA's New Car Assessment Program (NCAP).

Table 9 below shows the velocity, crash pulse duration, and peak

[68] Japan, Korea, and China adopted ECE R.44 or a regulation based on the ECE R.44.

[69] Regulation No. 129—Enhanced Child Restraint Systems (ECRS). Since July 2013, CRSs in Europe (and other countries) can be approved in accordance with the new UN Regulation No. 129 for CRSs, also known as ''I-Size Regulation.'' R.129 requires all children under 15 months to be transported rear facing, adds requirement for vehicle CRS compatibility, and has a dynamic test for side impact protection. In contrast, ECE.R44 categorizes CRSs by weight groups and does not have a side impact test.

[70] The proposed test bench frame was not ready at the time the 56 km/h (35 mph) tests were performed. However, since the proposed seat assembly geometry is not significantly different from the current FMVSS No. 213 seat assembly geometry, NHTSA believes the results are comparable to a test performed in the proposed upgraded seat assembly.

acceleration for each of the five sled acceleration pulses. The first row in Table 9 sets forth the characteristics of the current FMVSS No. 213 sled acceleration pulse, and the last row shows the characteristics of the average acceleration pulse of MY 2012 passenger vehicles in the 56 km/h (35 mph) NCAP frontal crash test. Figure 7 shows the sled acceleration pulse profiles.

TABLE 9—SLED AND VEHICLE ACCELERATION PULSE CHARACTERISTICS

Pulse	Velocity (mph)	Duration (ms)	Peak acceleration (G)
213	29.7	81	23.0
A	34.3	91	33.5
B	35.0	95	31.5
C	34.3–34.6	101–103	29.0–29.3
D	34.4–35.0	100–105	26.9–29.0
E	34.5–34.8	111	25.6–25.8
Average NCAP [71]	35.0	104	32.0

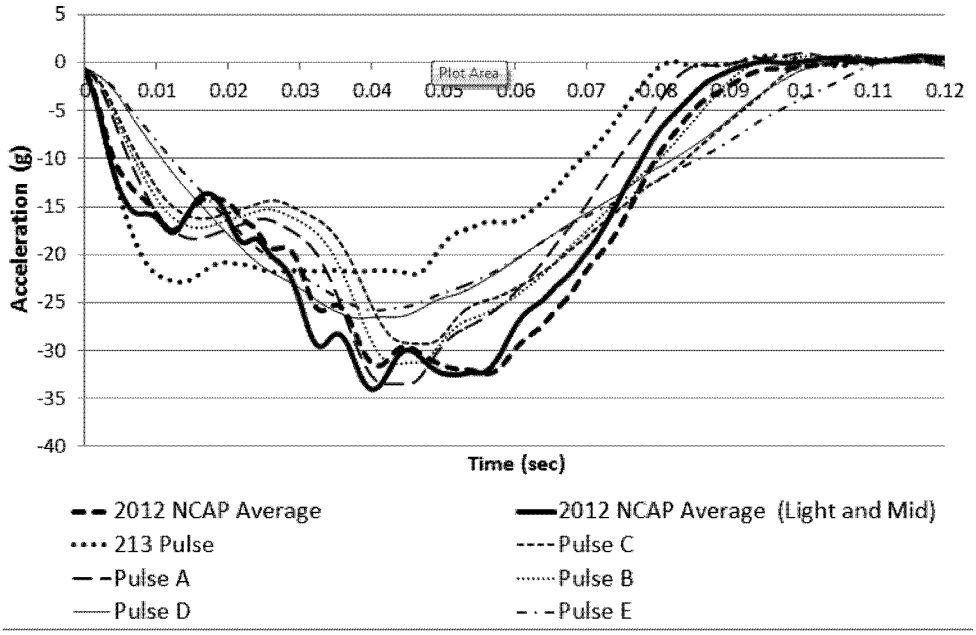

Note: Light means light vehicle weighing less than 3,300 lb.
Mid means medium vehicle weighing between 3,000 to 4000 lb.

Figure 7. Sled and vehicle acceleration pulse profiles

In the 2003 final rule (*supra*),[72] the Agency identified factors of the acceleration pulse associated with crash severity: change in velocity, peak acceleration, and acceleration pulse duration. Generally, for the same change in velocity, acceleration pulses of higher peak acceleration and shorter duration are higher in crash severity. The 2003 final rule also identified a rapid rise in initial acceleration to be associated with higher crash severity. Applying these criteria to the acceleration pulses shown in Table 9 and Figure 7, pulse A could be the most severe and E the least severe. Although the current FMVSS No. 213 acceleration pulse (see Figure 7) has lower peak Gs and a lower change in velocity than the other 5 sled acceleration pulses (A through E), the FMVSS No. 213 pulse is reasonably severe because of the rapid rise in acceleration in the initial portion of the pulse (for comparison, see acceleration pulses D and E).

The sled acceleration pulses A, B, and C have a pulse shape and peak acceleration level similar to the 2012 NCAP average crash pulse. They have a sharp decline to approximately 17g then a gradual decline to approximately 35 g. Sled acceleration pulses D and E have a smoother sinusoidal shape with lower peak acceleration levels.

Forward-Facing CRSs

NHTSA tested three forward-facing CRSs equipped with internal harnesses on the sled using the five different 56.3 km/h (35 mph) sled pulses and the FMVSS No. 213 48 km/h (30 mph) pulse and the HIII–3YO and HIII–6YO dummies. The CRSs were attached to the standard seat assembly using the child restraint anchorage system (''LATCH'' lower anchors and tether).

Test results showed the HIII–6YO dummy exhibiting unrepresentative kinematics during the test. In some tests, severe head-to-knee contact occurred due to the legs of the dummy rotating upwards during the test. The

[71] Average crash acceleration time histories from MY 2012 passenger vehicles in NCAP frontal crash tests.

[72] 68 FR 37640.

Agency deemed this kinematic to be unrepresentative as it is unlikely that the legs of a 6YO child in a vehicle would rotate upwards; the front seat structure would impede such rotation. (The Agency attempted to retest the CRSs with the legs of the HIII–6YO tied to the seat assembly, but sometimes this did not prevent the legs from rotating upwards.)

The Radian 65 model was tested with pulse E (with and without legs restrained) and in both tests the HIII–6YO dummy head and chest injury measures exceeded the allowable threshold levels (see Table 10). The Radian 65 model was also tested with pulse D and the dummy's chest acceleration exceeded threshold levels while HIC was barely within the threshold level (98.1 percent of 1,000 threshold level). There was chin-to-chest contact for the HIII–6YO dummy in the tests with the Radian 65 that resulted in high head and chest injury measures.

Table 10. Sled test results for forward-facing (FF) CRSs installed using the lower anchors and tether (bold and underlined=exceeded performance threshold levels)

Test Number	Pulse Code	Speed	Duration	Accel.	CRS Model	Dummy	HIC	Chest Accel. (g)	Head Excursion (mm)	Knee Excursion (mm)
		km/h	ms	g			1000	60	720	915
8832	213	47.8	81	23	Graco ComfortSport	3 YO	392.5	44.0	552	NA
8833	213	47.8	81	23	Graco ComfortSport	3 YO	567.5	41.4	540	NA
8837	B	56.3	95	31.5	Graco ComfortSport	3 YO	792.8	44.2	717	NA
8839	C	55.2	103	29	Graco ComfortSport	3 YO	430.9	39.7	696	NA
8840	C	55.2	103	29	Graco ComfortSport	3 YO	772.6	44.0	718	NA
8843	D	56.3	100	29	Graco ComfortSport	3 YO	828.7	48.3	742	NA
8834	213	47.8	81	23	Graco MyRide 65	6 YO	599.5	46.3	583	NA
8835	213	47.8	81	23	Graco MyRide 65	6 YO	781.4	45.4	519	599
8836	A	55.2	91	33.5	Graco MyRide 65	6 YO	**1595.2**	59.9	696	0
8838	C	55.7	101	29.3	Graco MyRide 65	6 YO	**1022.0**	48.5	697	784
8842	D	55.3	104	26.6	Graco MyRide 65	6 YO	**1098.5**	53.4	657	773
8845	D	56.0	103	27.2	Graco MyRide 65	6 YO	**1214.7**	52.5	696	788
8846	E	55.8	111	25.6	Graco MyRide 65	6 YO	993.1	51.8	681	NA
8844	D	55.8	105	26.98	Radian 65	6 YO	981.0	**62.7**	703	749
8847	E	55.5	111	25.7	Radian 65	6 YO	**1040.9**	**65.2**	676	763
8848	E	56.0	111	25.8	Radian 65	6 YO	**1017.5**	**61.8**	690	767

Note: Some knee excursion values are missing because the tracking targets on the dummy's knees were not visible during maximum excursion.

The Graco MyRide 65 was tested in 4 pulse types (A, C, D, and E) with the HIII–6YO dummy. In tests with pulses A, C, and D, the dummy's HIC value exceeded the injury threshold level of 1,000 due to head-to-knee contact. When tested with the HIII–6YO dummy with pulse E, HIC and chest acceleration threshold levels were met, but HIC reached 993 (99.3 percent of 1,000 injury threshold). On average, in sled tests of the Graco MyRide 65, HIC values were 72 percent greater, chest acceleration were 16 percent higher, head excursions were 24 percent higher,

and knee excursions were 32 percent higher in tests with the 56 km/h (35 mph) sled pulses than in the corresponding tests with the FMVSS No. 213 sled pulse.

The Graco ComfortSport CRS was tested using the HIII–3YO dummy with acceleration pulses B, C, and D. The CRS met the HIC and chest acceleration performance criteria; however, HIC and head excursions were at elevated levels near the performance limits. HIC values were on average 65 percent greater and head excursions were 30 percent higher in tests with the 56 km/h (35 mph) sled pulses than in the corresponding tests with the FMVSS No. 213 sled pulse.

Rear-Facing and Booster Seats

NHTSA tested two rear-facing CRSs with the current FMVSS No. 213 acceleration and acceleration pulse C, using the HIII–3YO and CRABI–12MO dummies. Results showed no performance measures exceeding their corresponding threshold levels. However, HIC (953) was very close to the threshold value in the test with the infant carrier (Peg Perego Viaggio) with the CRABI–12MO dummy.

NHTSA also conducted nine tests of the Evenflo Big Kid High Back Booster Seat with pulses A, B, C, D, and E, and three tests of the Evenflo Big Kid Backless Booster seat with pulses D and E. This test series used the HIII–6YO and HIII–10YO dummies. All the performance measures were within threshold levels in these tests. However, HIC was about 52 percent higher in tests with the 56 km/h sled pulse compared to the current FMVSS No. 213 sled acceleration pulse.

Summary of Sled Test Data

The tests conducted at 48.3 km/h (30 mph) and 56.3 km/h (35 mph) indicate that increasing the test speed to 56.3 km/h (35 mph):

- Results in a high rate of failures of forward-facing CRSs tested with the HIII–6YO test dummy. This suggests that most forward-facing CRSs that are subject to testing with the HIII–6YO dummy would need redesigning to meet HIC and chest acceleration performance criteria. Alternatively, CRS manufacturers might choose not to sell forward-facing CRSs that are subject to testing with the HIII–6YO dummy, *i.e.,* CRSs recommended for use by children weighing over 18.2 kg (40 lb),[73] which would reduce the availability of those CRSs to the public.
- Causes unrepresentative head-to-knee contacts that result in high HIC values in convertible CRSs tested in a forward-facing configuration with the HIII–6YO. Real world data indicate that while head-to-knee contacts may be present in the real world during a crash, they do not result in head injuries.
- Causes unrepresentative head-to-chest contact for the HIII–6YO dummy in forward-facing CRSs that result in high head and chest injury measures.
- Results in injury measures closer to the standard's limit in some rear-facing CRSs and booster seats. This suggests that some rear-facing CRSs and booster seats may need modification.

f. Agency Decision

As discussed above, after reviewing real world crash data, regulations of other countries, and sled test data, the Agency has decided not to increase the test velocity of FMVSS No. 213 to 56.3 km/h (35 mph). To summarize, the reasons are as follows:

- CRSs are already highly effective in preventing injuries and fatalities in motor vehicle crashes. NASS–CDS data files show that restrained children are more involved in lower-severity crashes than older occupants. The percentage of frontal crashes of restrained children covered by the 48 km/h (30 mph) sled test is greater than the percentage of frontal crashes of restrained older occupants covered by the 56 km/h (35 mph) vehicle crash test. The FMVSS No. 213 48 km/h (30 mph) sled test velocity does not equate to a diminished level of safety for restrained children as compared to older vehicle occupants. In fact, it could be argued that FMVSS No. 213's 48 km/h (30 mph) test provides a higher degree of protection than the 56 km/h (35 mph) test of FMVSS No. 208 in terms of the breadth of the crashes they cover involving the relevant restrained population.
- There is no safety need to raise the FMVSS No. 213 test speed to 56 km/h (35 mph). A 56 km/h (35 mph) change in velocity would only cover an additional 0.1 percent of the crashes involving restrained children, which suggests that the benefits accrued from a higher test velocity would be very small. While only an additional 0.1 percent of the crashes would be covered, NHTSA undertook a review of case files to determine whether a change in velocity could have possibly prevented fatal or serious injury to children involved in the additional 0.1 percent of crashes. The review showed that AIS 3+ injuries to CRS restrained children in frontal crashes are due to CRS misuse, excessively severe crashes beyond 56 km/h (35 mph) crash severity, and other factors unrelated to crash severity. There is no indication that a CRS designed to meet a 56.3 km/h (35 mph) FMVSS No. 213 compliance test would have prevented or mitigated any of these injuries.
- It is unclear whether a 56 km/h (35 mph) test velocity is appropriate for the FMVSS No. 213 sled test environment with the larger size dummies. The test dummies used in the test showed possible unrepresentative dummy kinematics (exacerbated head-to-knee or chin-to-chest contact) that result in high injury measures near or above the established threshold limits.
- There may be unintended safety consequences associated with raising the FMVSS No. 213 test speed to 56 km/h (35 mph). The Agency's sled tests conducted with various crash pulses of a 56 km/h (35mph) change in velocity indicate that the designs of many forward-facing CRSs would need to be changed to comply with performance requirements of a 56 km/h (35 mph) sled velocity test. The testing also suggests that some rear-facing CRSs and booster seats may need design modifications. The design changes may increase the weight, cost, and size of these CRSs. NHTSA is concerned that the design changes could potentially reduce the usability of CRSs, resulting in non-use or misuse of child restraints for no real benefit. In addition, there is a concern that CRSs redesigned to meet increased test velocities may not perform as well in the more common low speed crashes.
- The current 48 km/h (30 mph) FMVSS No. 213 sled test velocity is similar, if not more severe, than those in CRS regulations of other countries. It may be considered more severe because of its rapid initial rise in acceleration and its short duration.

Accordingly, after consideration of these factors, NHTSA has decided that raising the FMVSS No. 213 test speed to 56 km/h (35 mph) is unwarranted at this time.

VII. Fleet Testing of CRSs on the New Seat Assembly Designs

a. Initial Standard Seat Assembly Design (V1)

NHTSA sled tested a wide array of CRSs to see how they performed on the initial seat assembly design[74] (referred

[73] The agency is unable to estimate the number of CRS models that would need redesign due to the limited nature of the agency's testing.

[74] The initial standard seat assembly design (V1) used in these sled tests only differed from the proposed standard seat assembly (V2) in minor ways. The initial standard seat assembly used in these sled tests had a shorter seat back height and slightly different seat belt and child restraint anchorage locations. NHTSA performed tests on the proposed standard seat assembly (V2) of some of the CRSs that were tested on V1 standard seat assembly; results showed no significant difference

Continued

to in this NPRM as Version 1 (V1)). The V1 seat assembly design drawings were placed in Docket No. NHTSA–2013–0055–0002 on May 17, 2015. The tests were conducted with an acceleration pulse within the FMVSS No. 213 specified acceleration corridor, with a peak acceleration of 21.2 g and average sled velocity of 46.9 km/h (29.2 mph). All CRSs met the current FMVSS No. 213 performance requirements, as well as the proposed head excursion requirement for forward-facing CRSs in the untethered condition.

The study consisted of 53 tests of 23 CRS models of 12 different makes (*i.e.* Chicco, Britax, Evenflo, etc.). The Agency [75] and booster type CRSs. The Agency selected CRSs based on: Sales volume; CRS types, makes and models; CRS weight; CRS child weight/height recommendations; variety of design (different belt path location, base size for rear-facing only CRSs); and special features (such as an inflatable feature, presence of a support leg and of rigid attachments to child restraint anchorage systems). The CRSs represented a wide variety of CRSs from different manufacturers and are representative of the range of CRSs in the current market.

Tests were performed with test dummies currently used in FMVSS No. 213, including the CRABI–12MO, HIII–3YO, HIII–6YO and HIII–10YO. The CRSs equipped with harnesses were installed by means that included: (a) The lower anchors of a child restraint anchorage system; (b) lower anchors and tether; (c) 3-point belt; (d) 2-point belt; (e) 3-point belt with tether; and (f) 2-point belt with tether.

Table 11 provides a test matrix of the CRS name, orientation, installation method, dummy used and injury measures. All the CRSs tested on the proposed standard seat assembly met all current performance requirements in FMVSS No. 213 except for one CRS (Evenflo Titan Elite). The HIC and chest acceleration values were below injury threshold levels of 1,000 and 60 g, respectively, in all the tests. The head and knee excursions of the dummies used in testing forward-facing CRSs and booster seats were below allowable limits (head excursion of 813 mm (32 inches) without tether use and 720 mm (28 inches) with tether use, knee excursion of 915 mm (36 inches)) with all the CRS models tested, except in a test with the Evenflo Titan Elite where the head excursion of the HIII–6YO dummy was 815 mm (32 inches).

BILLING CODE 4910–59–P

in CRS performance on the two standard seat assemblies. These results are discussed in the next section. Because there were no significant differences in CRS performance on the two seat assemblies, the agency considers the results of CRS tests on V1 relevant in ascertaining the performance of CRSs on V2.

[75] A combination CRS is a type of forward-facing car seat that is used with an internal harness system to secure a child. With removal of the internal harness, it can be used as a belt-positioning booster.

Table 11. Test matrix and summary results on the V1 standard seat assembly

Test Number	Seat Name	Orientation	Installation Method	Dummy	HIC 36	Chest Accel. (g)	Head Excursion (mm)	Knee Excursion (mm)
					1000	60	720 (w/ tether) 813 (w/o tether)	915
8910	Chicco Key Fit	RF Infant	LA Only	12 MO CRABI	389.1	45.2	-	-
8911	Graco Snugride 22	RF Infant	LA Only	12 MO CRABI	678.7	*48.7*	-	-
8912	Evenflo Discovery	RF Infant	LA Only	12 MO CRABI	696.4	*49.3*	-	-
8913	Baby Trend Flex Loc	RF Infant	LA Only	12 MO CRABI	685.0	44.4	-	-
8915	Cybex Aton (no leg)	RF Infant	LA Only	12 MO CRABI	537.6	46.6	-	-
8916	Britax B-Safe	RF Infant	LA Only	12 MO CRABI	493.1	45.0	-	-
8922	Graco Snugride 22	RF Infant	SB2PT	12 MO CRABI	757.0	*54.2*	-	-
8917	Graco Snugride 22	RF Infant	SB3PT	12 MO CRABI	737.2	45.2	-	-
8918	Safety1st Onboard 35	RF Infant	SB3PT	12 MO CRABI	420.6	*49.6*	-	-
8920	Evenflo Discovery (w/o base)	RF Infant	SB3PT	12 MO CRABI	250.0	42.7	-	-
8921	Evenflo Discovery	RF Infant	SB3PT	12 MO CRABI	594.6	41.4	-	-
8914	Evenflo Tribute	RF Convertible	LA Only	12 MO CRABI	548.8	43.5	-	-
8924	Evenflo Tribute	RF Convertible	LA Only	HIII-3YO	598.4	42.7	-	-
8925	Britax Marathon	RF Convertible	LA Only	HIII-3YO	456.2	43.4	-	-
8923	Evenflo Tribute	RF Convertible	SB2PT	12 MO CRABI	687.0	46.4	-	-
8919	Evenflo Tribute	RF Convertible	SB3PT	12 MO CRABI	545.8	39.7	-	-
8928	Alpha Omega Elite	RF Convertible	SB3PT	HIII-3YO	488.2	44.1	-	-
8931	Graco My Ride 65	RF Convertible	SB3PT	HIII-3YO	446.5	*50.2*	-	-
8926	Evenflo Tribute	FF Convertible	LA Only	HIII-3YO	353.24*	46.2	638	725
8934	Cosco Scenera	FF Convertible	LA Only	HIII-3YO	406.4	*47.5*	639	*745*
8910	Evenflo Titan Elite	FF Convertible	LA Only	HIII-6YO	566.0	*35.0*	**815**	*897*
8927	Alpha Omega Elite	FF Convertible	LATCH	HIII-3YO	402.0	39.9	*591*	667
8935	Cosco Scenera	FF Convertible	LATCH	HIII-3YO	271.7	39.9	439	633
8936	Cleck Foonf	FF Convertible	LATCH	HIII-3YO	384.4	35.1	*603*	629
8912	Evenflo Titan Elite	FF Convertible	LATCH	HIII-6YO	518.2	40.4	*644*	*784*
8913	Alpha Omega Elite	FF Convertible	LATCH	HIII-6YO	441.6	39.8	*640*	*759*
8914	Graco My Ride 65	FF Convertible	LATCH	HIII-6YO	398.6	41.8	520	*775*
8931	Graco Nautilus	FF Convertible	SB2PT&T	HIII-6YO	349.8	38.8	*720*	*760*
8929	Evenflo Tribute	FF Convertible	SB3PT	HIII-3YO	410.7	44.4	606	694
8930	Alpha Omega Elite	FF Convertible	SB3PT	HIII-3YO	411.2	41.3	600	676
8915	Britax Marathon	FF Convertible	SB3PT	HIII-6YO	668.4	44.4	*728*	*843*
8917	Evenflo Titan Elite	FF Convertible	SB3PT	HIII-6YO	570.4	37.9	*697*	*822*
8918	Graco Nautilus	FF Convertible	SB3PT	HIII-6YO	457.6	45.4	*691*	*780*
8920	Recaro Performance Ride	FF Convertible	SB3PT	HIII-6YO	600.1	47.1	*723*	*813*
8933	Britax Frontier 85	FF Convertible	SB3PT&T	HIII-10YO	-	39.1	*696*	*795*
8932	Cosco Scenera	FF Convertible	SB3PT&T	HIII-3YO	274.5	39.0	490	N/A
8933	Graco My Ride 65	FF Convertible	SB3PT&T	HIII-3YO	254.4	39.7	483	628
8916	Chicco Nextfit	FF Convertible	SB3PT&T	HIII-6YO	389.7	41.9	*626*	*776*
8919	Britax Marathon	FF Convertible	SB3PT&T	HIII-6YO	503.82*	39.8	*661*	*788*
8923	Evenflo Titan Elite	FF Convertible	SB3PT&T	HIII-6YO	581.27*	40.6	*642*	712
8928	Recaro Performance Ride	FF Convertible	SB3PT&T	HIII-6YO	673.6	45.7	*674*	*760*
8930	Alpha Omega Elite	FF Convertible	SB3PT&T	HIII-6YO	471.4	40.3	*596*	707
8929	Graco Nautilus	FF Convertible	SP3PT&T	HIII-6YO	420.5	41.3	*634*	731
8932	Britax Frontier 85	BPB	SB3PT	HIII-10YO	-	47.1	608	*782*
8934	Graco Nautilus	BPB	SB3PT	HIII-10YO	-	43.1	600	*754*
8935	Alpha Omega Elite	BPB	SB3PT	HIII-10YO	-	46.7	633	*761*
8936	Graco Turbo Booster	BPB	SB3PT	HIII-10YO	-	47.6	597	697
8921	Graco Nautilus	BPB	SB3PT	HIII-6YO	374.2	34.8	559	N/A
8922	Graco Turbo Booster	BPB	SB3PT	HIII-6YO	361.1	38.6	562	584
8924	Cosco Highrise Booster NB	BPB	SB3PT	HIII-6YO	289.9	42.8	510	561
8925	Evenflo Amp High Back	BPB	SB3PT	HIII-6YO	290.3	45.0	574	618
8926	Harmony Youth NB	BPB	SB3PT	HIII-6YO	297.9	43.3	551	604

Note: SB3PT means Type 2 belt, *SB2PT* means Type 1 belt, *SB3PT&T* means Type 2 belt and tether, *SB2PT&T* means Type 2 belt and tether, *LATCH* means the full child restraint anchorage system, *LA Only* means lower anchorages of the child restraint anchorage system, *RF* means rear-facing, and *FF* means forward-facing.
*HIC was calculated using a truncated acceleration pulse because of head strikes with rear seat structure during the rebound phase of the test.

Table 12 shows that the back support angle of rear-facing CRSs did not exceed 70 degrees in any of the tests with the proposed standard seat assembly.

Table 12. CRS rotation angle in sled tests with rear-facing CRSs

Test Number	Seat Name	Orientation	Installation Method	Dummy	Rotation Angle
					70 degrees
8910	Chicco Key Fit	RF Infant	LA Only	12 MO CRABI	46
8911	Graco Snugride 22	RF Infant	LA Only	12 MO CRABI	55
8912	Evenflo Discovery	RF Infant	LA Only	12 MO CRABI	*65*
8913	Baby Trend Flex Loc	RF Infant	LA Only	12 MO CRABI	*62*
8915	Cybex Aton (no leg)	RF Infant	LA Only	12 MO CRABI	37
8916	Britax B-Safe	RF Infant	LA Only	12 MO CRABI	*57*
8922	Graco Snugride 22	RF Infant	SB2PT	12 MO CRABI	36
8917	Graco Snugride 22	RF Infant	SB3PT	12 MO CRABI	47
8918	Safety1st Onboard 35	RF Infant	SB3PT	12 MO CRABI	35
8920	Evenflo Discovery (w/o base)	RF Infant	SB3PT	12 MO CRABI	35
8921	Evenflo Discovery	RF Infant	SB3PT	12 MO CRABI	46
8914	Evenflo Tribute	RF Convertible	LA Only	12 MO CRABI	*58*
8924	Evenflo Tribute	RF Convertible	LA Only	HIII-3YO	45
8925	Britax Marathon	RF Convertible	LA Only	HIII-3YO	35
8923	Evenflo Tribute	RF Convertible	SB2PT	12 MO CRABI	39
8919	Evenflo Tribute	RF Convertible	SB3PT	12 MO CRABI	53
8928	Alpha Omega Elite	RF Convertible	SB3PT	HIII-3YO	*56*
8931	Graco My Ride 65	RF Convertible	SB3PT	HIII-3YO	*56*

Note: SB3PT means Type 2 belt, *SB2PT* means Type 1 belt, *LA Only* means lower anchorages of the child restraint anchorage system and *RF* means rear-facing.

Paired Tests

NHTSA compared some of the CRSs tested on the V1 standard seat assembly with available compliance test data (using the current FMVSS No. 213 standard seat assembly) to see whether changes in the standard seat assembly affected CRS performance. The comparison was limited in that current compliance tests of CRSs with internal harnesses are conducted with a 2-point belt to install the CRS (tethered and untethered conditions), while the fleet tests with the V1 standard seat assembly were conducted with a 3-point attachment (tethered and untethered). In addition, some compliance tests used the H2–6YO at the manufacturer's option, while all applicable fleet tests with the V1 standard seat assembly used the HIII–6YO dummy.

Rear-Facing CRSs

Table 13 compares the results of sled tests on the V1 standard seat assembly with results from compliance tests using the same rear-facing infant and convertible CRS models. All performance measures were below threshold levels. Paired T-test indicated that at a 95 percent confidence level, the HIC injury measures of the CRABI–12MO in tests with the V1 standard seat assembly were not significantly different from those with the current FMVSS No. 213 specified standard seat assembly. On the other hand, the chest acceleration of the CRABI–12MO was significantly different (lower) in tests with the V1 seat assembly than those in current compliance tests ($p<0.01$). The average reduction in chest acceleration when tested on the V1 standard seat assembly was 4.7 g.

Table 13. Paired sled tests with the V1 standard seat assembly and FMVSS No. 213 compliance tests of rear-facing CRSs with the CRABI-12MO

Test Number	Test Type / Standard Seat Assembly Type	Seat Name	HIC	(+) Increase (-) Reduction	Chest Accel. (g)	(+) Increase (-) Reduction
8913	V1	Baby Trend Flex Loc	685.0	5.4%	44.4	-16.5%
213-MGA-12-005	FMVSS 213 Compliance	Baby Trend Encore Flex-Loc	650.0		53.2	
8910	V1	Chicco Key Fit	389.1		45.2	
213-MGA-12-013	FMVSS 213 Compliance	Chicco KeyFit 30 61472	351.0	10.9%	52.2	-13.5%
213-MGA-13-021	FMVSS 213 Compliance	Chicco KeyFit 30 64172	330.0	17.9%	50.5	-10.6%
8912	V1	Evenflo Discovery	696.4		49.3	
213-MGA-12-039	FMVSS 213 Compliance	Evenflo Discovery 3021145	686.0	1.5%	50.6	-2.5%
213-MGA-13-043	FMVSS 213 Compliance	Evenflo Discovery/Nurture 3022198	596.0	16.9%	49.1	0.5%
8911	V1	Graco Snugride 22	678.7		48.7	
213-MGA-12-058	FMVSS 213 Compliance	Graco SnugRide 1750727	693.0	-2.1%	54.8	-11.2%
213-MGA-13-056	FMVSS 213 Compliance	Graco SnugRide 1802503	722.0	-6.0%	51.4	-5.3%
8916	V1	Britax B-Safe	493.1	-1.2%	45.0	-1.7%
213-MGA-13-014	FMVSS 213 Compliance	Britax B-Safe E9BE53C	499.0		45.8	
8914	V1	Evenflo Tribute	548.8	-1.3%	43.5	-15.9%
213-MGA-13-046	FMVSS 213 Compliance	Evenflo Tribute 3812198	556.0		51.8	
8923	V1	Evenflo Tribute	687.0	21.8%	46.4	-12.4%
213-MGA-13-046	FMVSS 213 Compliance	Evenflo Tribute 3812198	564.0		52.9	

Note: V1 means standard seat assembly Version 1.

Forward-Facing CRSs

The results of the sled tests with the V1 standard seat assembly on forward-facing CRSs, versus compliance tests, are shown in Table 14. The paired sled tests showed that all injury measures were below injury threshold levels. Paired T-test of each of the HIII–3YO performance measures in Table 14 showed no significant difference (95 percent confidence level) when tested in the V1 standard seat assembly and the current FMVSS No. 213 seat assembly. Only one paired test was performed using the HIII–6YO dummy, so a paired T-test was not possible.

Table 14. Paired sled tests with the V1 standard seat assembly and compliance tests of forward-facing CRSs

Test Number	Test Type: Standard Seat Assembly Type	Seat Name	Dummy	HIC	HIC (+) Increase (-) Reduction	Chest Accel (g)	Chest Accel (+) Increase (-) Reduction	Head Excursion (mm)	Head Excursion (+) Increase (-) Reduction	Knee (mm)	Knee (+) Increase (-) Reduction
8935	V1	Cosco Scenera	HIII-3YO	271.7		39.9		439		633	
213-MGA-12-030	FMVSS 213 Compliance	Dorel Scenera 5	HIII-3YO	306.0	-11.2%	38.6	3.2%	508	-13.6%	605	4.6%
213-MGA-13-036	FMVSS 213 Compliance	Dorel Scenera	HIII-3YO	289.0	-6.0%	40.7	-2.1%	518	-15.3%	605	4.6%
8934	V1	Cosco Scenera	HIII-3YO	406.4	-15.5%	47.5	15.1%	639	-7.2%	745	7.5%
213-MGA-13-036	FMVSS 213 Compliance	Dorel Scenera	HIII-3YO	481.0		41.3		688		693	
8927	V1	Alpha Omega Elite	HIII-3YO	402.0	5.2%	39.9	-12.0%	591	-3.9%	667	2.6%
213-MGA-12-026	FMVSS 213 Compliance	Dorel Alpha Omega Elite	HIII-3YO	382.0		45.4		615		650	
8926	V1	Evenflo Tribute	HIII-3YO	353.2	-33.7%	46.2	9.1%	638	-4.1%	725	-2.6%
213-MGA-13-046	FMVSS 213 Compliance	Evenflo Tribute	HIII-3YO	533.0		42.3		665		744	
8927	V1	Alpha Omega Elite	HIII-3YO	402.0	21.4%	39.9	-7.1%	591	9.9%	667	14.2%
213-MGA-13-031	FMVSS 213 Compliance	Dorel Alpha Omega Elite	HIII-3YO	331.0		43.0		538		584	
8914	V1	Graco My Ride 65	HIII-6YO	398.6	68.9%	41.8	-24.2%	520	-1.1%	775	1.3%
213-MGA-13-061	FMVSS 213 Compliance	Graco MyRide 65	HIII-6YO	236.0		55.1		526		765	

Booster Seats

Results of paired sled tests of booster seats tested on the V1 standard seat assembly and on the FMVSS No. 213 standard seat assembly are shown in Table 15. All injury measures were below injury threshold levels. The paired sled tests showed a 37.2 percent average reduction in HIC measures and a 29.3 percent average increase in head excursion in all the booster seat models tested on the proposed standard seat assembly compared to the paired compliance test.

Paired T-test indicated that HIC injury measures and head excursions in booster seat tests with the V1 standard seat assembly were significantly different (95 percent confidence level) than those in tests with the current FMVSS No. 213 standard seat assembly. On the other hand, paired T-test indicated no significant difference (95 percent confidence level) in chest acceleration and knee excursions in tests with the V1 standard seat assembly and the current FMVSS No. 213 standard seat assembly.

Table 15. Paired sled tests with the V1 standard seat assembly and compliance tests of booster seats

Test Number	Test Type: Standard Seat Assembly Type	Seat Name	Dummy	HIC	HIC (+) Increase (-) Reduction	Chest Accel. (g)	Chest Accel. (+) Increase (-) Reduction	Head Excursion (mm)	Head Excursion (+) Increase (-) Reduction	Knee (mm)	Knee (+) Increase (-) Reduction
8924	V1	Cosco Highrise Booster NB	HIII-6YO	289.9	-39.3%	42.8	3.3%	510	27.9%	561	20.2%
213-MGA-12-034	FMVSS 213 Compliance	Dorel Highrise Booster	H2-6YO	478.0		41.4		399		467	
8924	V1	Cosco Highrise Booster NB	HIII-6YO	289.9	-54.0%	42.8	-15.0%	510	35.8%	561	9.0%
213-MGA-13-039	FMVSS 213 Compliance	Dorel Highrise	H2-6YO	630.0		50.3		376		515	
8925	V1	Evenflo Amp High Back	HIII-6YO	290.3	-31.5%	45.0	-3.8%	574	32.3%	618	-6.1%
213-MGA-12-053	FMVSS 213 Compliance	Evenflo Amp High Back	H2-6YO	424.0		46.8		434		658	
8922	V1	Graco Turbo Booster	HIII-6YO	361.1	-14.2%	38.6	-8.7%	562	7.9%	584	-10.8%
213-MGA-12-064	FMVSS 213 Compliance	Graco TurboBooster	HIII-6YO	421.0		42.3		521		655	
8926	V1	Harmony Youth NB	HIII-6YO	297.9	-28.2%	43.3	-8.3%	551	26.1%	604	16.0%
213-MGA-12-069	FMVSS 213 Compliance	Harmony LiteRider Youth Booster	HIII-6YO	415.0		47.2		437		521	
8927	V1	Bubble Bum	HIII-6YO	194.9	-56.2%	48.8	10.7%	541	45.8%	598	10.6%
213-MGA-12-090	FMVSS 213 Compliance	Bubble Bum Inflatable Booster	HIII-6YO	445.0		44.1		371		541	
8924	V1	Cosco Highrise Booster NB	HIII-6YO	289.9	-54.0%	42.8	-15.0%	510	35.8%	561	9.0%
213-MGA-13-039	FMVSS 213 Compliance	Dorel Highrise	H2-6YO	630.0		50.3		376		515	

Summary of Sled Test Results With the V1 Standard Seat Assembly

All CRSs tested on the V1 standard seat assembly, except for one, met the FMVSS No. 213 performance requirements.

Comparing performance measures from a sample of sled tests conducted with the V1 standard seat assembly and from FMVSS No. 213 compliance tests indicate the following:

- Rear-facing CRSs with CRABI–12MO: No significant differences in HIC measures but chest accelerations were lower in tests with the V1 standard seat assembly.
- Forward-facing CRSs with HIII–3YO and HIII–6YO: No significant differences in any of the performance measures (HIC, chest acceleration, head excursion, and knee excursion).
- Booster seats with HIII–6YO: HIC measures were lower and head excursions were higher in tests with the V1 standard seat assembly. Chest accelerations and knee excursions were not significantly different from the compliance tests.
- There were no high head acceleration spikes or severe chin-to-chest contact in any of the sled tests with the proposed seat assembly.
- Testing with the V1 standard seat assembly results in only some minor changes in CRS performance relative to the specified performance limits.

b. Proposed Standard Seat Assembly Design (V2)

During the research test series with the initial bench design (V1), a few glitches were noticed, primarily with the anchorages and the seat back height. The lower anchorages deformed due to the loads during testing and the shoulder belt anchor was positioned in an overly outboard location causing the dummy to roll out of the shoulder belt in low back booster seat tests. The seat back height of the initial bench design was too low (not within one standard deviation of the average) and during low back booster seat testing, the dummies would hit the exposed metal seat back in the rebound phase causing a significant spike in head acceleration due to the contact.

In response, the Agency modified the initial bench design (V1) by: (a) Changing the design of the lower anchorages to prevent their deformation and to facilitate their easy replacement; (b) placing the shoulder belt anchor in

a more inboard position that was more representative of the anchor location in the vehicle fleet and that mitigated unrealistic dummy rollout during low back booster seat tests; and, (c) increasing the seat back height to one that was more representative of seat back height in the vehicle fleet, which would also mitigate dummy head strikes with metal structure behind the seat when testing low back booster seats. These changes to the initial bench design (V1) resulted in the proposed standard seat assembly (referred to in this NPRM as Version 2 (V2)). Schematics of these changes were placed on August 25, 2015 in Docket No. NHTSA–2013–0055–0008), with more detailed drawings placed there in July 2018.

NHTSA performed a second series of sled tests with CRSs to see how they performed on V2 (the seat assembly proposed in this NPRM). The tests were conducted with an acceleration pulse within the FMVSS No. 213 specified acceleration corridor, with a peak acceleration of 21.2 g and average sled velocity of 46.9 km/h (29.2 mph). The study consisted of 40 tests of 24 CRS models of 10 different CRS makes. NHTSA tested infant, convertible, combination and booster type CRSs. Twenty-two (22) tests also replicated the selection of tests performed with the V1 standard seat assembly, to compare the performance of 15 CRS models. Four (4) tests used previously-selected CRSs models but were tested in a different attachment configuration or used a different sized dummy. Fifteen (15) tests were performed with 10 newly-selected CRS models that included some newer models in the market with particular design features (*i.e.,* Britax Clicktight technology, Graco Affix Booster with lower anchorage attachments) and expanded the variety of CRS makes and models evaluated with V1.

Tests were performed with CRABI–12MO, HIII–3YO, HIII–6YO and HIII–10YO. Rear-facing and forward-facing CRSs equipped with harnesses were installed by means that included: (a) The lower anchors of a child restraint anchorage system; (b) lower anchors and tether; (c) 3-point belt; and (d), 3-point belt with tether as appropriate. Booster seats were tested using a 3-point belt, and in the case of the Graco Affix, the lower anchors were attached to the bench per manufacturer's instructions.

Table 16 provides a test matrix of the CRS name, orientation, installation method, dummy used and injury measures. All the rear-facing CRSs, forward-facing CRSs with tether attached and booster seats tested on the proposed standard seat assembly (V2) met all performance requirements in FMVSS No. 213, regardless of the method of attachment to the seat (child restraint anchorage system or lap/shoulder belt), for each of the dummies used. For forward-facing CRSs tested without the tether attached, HIC, chest acceleration, and knee excursions were below performance limits in all the tests regardless of the method of attachment to the standard seat assembly, for each of the dummies used. Head excursions were below the performance limits for all the CRSs tested with the HIII–3YO, HIII–6YO, and HIII–10YO except for one CRS model. The Diono Radian R120 tested without the tether attached exceeded the head excursion limit using the HIII–10YO dummy.

Table 16. Results of sled tests with the proposed standard seat assembly V2

Vehicle Database	Seat Name	Orientation	Installation Method	Dummy	HIC 36	Chest Accel. (g)	Head Excursion (mm)	Knee Excursion (mm)
					1000	60	720 (w/ tether) 813 (w/o tether)	915
9606	Chicco Key Fit 30	RF Infant	LA Only	12 MO CRABI	430.9	43.6	-	-
9607	Graco SnugRide 30	RF Infant	LA Only	12 MO CRABI	644.8	47.7	-	-
9608	Britax B-Safe 35	RF Infant	LA Only	12 MO CRABI	598.2	41.6	-	-
9609	Safety1st Onboard 35 Air	RF Infant	SB3PT	12 MO CRABI	363.9	41.7	-	-
9610	Evenflo Nurture	RF Infant	LA Only	12 MO CRABI	679.8	48.3	-	-
9611	Evenflo Nurture	RF Infant	LA Only	12 MO CRABI	685.4	50.4	-	-
9612	Evenflo Nurture	RF Infant	LA Only	12 MO CRABI	720.9	49.5	-	-
9613	Evenflo Tribute	RF Convertible	SB3PT	12 MO CRABI	453.9	44.9	-	-
9614	Alpha Omega Elite	RF Convertible	SB3PT	HIII-3YO	711.1	43.4	-	-
9615	Graco My Ride 65	RF Convertible	SB3PT	HIII-3YO	482.5	49.3	-	-
9616	Chicco Nextfit	RF Convertible	LA Only	HIII-3YO	653.8	45.9	-	-
9617	Evenflo Tribute	RF Convertible	LA Only	HIII-3YO	512.2	48.8	-	-
9601	Britax Frontier Clicktight	FF Convertible	SB3PT&T	HIII-10YO	-	38.4	700	831
9601	Graco My Ride 65	FF Convertible	LATCH	HIII-6YO	462.9	42.3	598	721
9602	Britax Marathon	FF Convertible	SB3PT	HIII-6YO	671.5	38.1	*725*	749
9604	Recaro Performance Ride	FF Convertible	SB3PT	HIII-6YO	714.3	45.7	*705*	754
9605	Graco Argos 80	FF Convertible	SB3PT	HIII-10YO	-	47.2	*728*	834
9605	Chicco Nextfit	FF Convertible	SB3PT&T	HIII-6YO	429.9	39.1	639	739
9606	Britax Marathon	FF Convertible	LATCH	HIII-6YO	329.2	33.1	631	723
9608	Alpha Omega Elite	FF Convertible	SB3PT&T	HIII-6YO	461.1	44.3	654	711
9611	Graco Nautilus	FF Convertible	SB3PT	HIII-6YO	570.4	44.0	*664*	725
9612	Graco Nautilus	FF Convertible	SB3PT	HIII-6YO	534.9	42.4	*656*	721
9613	Graco Nautilus	FF Convertible	SB3PT	HIII-6YO	534.9	43.1	*676*	740
9615	Evenflo Titan	FF Convertible	LA Only	HIII-6YO	523.5*	36.0	*792*	773
9618	Alpha Omega Elite	FF Convertible	LATCH	HIII-3YO	384.1	47.0	612	652
9619	Cosco Scenera NEXT	FF Convertible	LA Only	HIII-3YO	585.8	42.7	*640*	504
9620	Evenflo Tribute	FF Convertible	SB3PT	HIII-3YO	453.2	42.3	*603*	664
9603	Diono Radian R120	FF Combination	SB3PT	HIII-10YO	-	47.0	***855***	822
9620	Diono Radian R120	FF Combination	SB3PT	HIII-10YO	-	45.0	***839***	791
9602	Graco Nautilus	BPB	SB3PT	HIII-10YO	-	46.7	*574*	758
9603	Cosco Ambassador NB	BPB	SB3PT	HIII-6YO	446.9	47.9	*477*	575
9604	Harmony Youth NB	BPB	SB3PT	HIII-10YO	-	47.6	*513*	679
9607	Evenflo Chase	BPB	SB3PT	HIII-6YO	617.0	55.8	*579*	689
9609	Graco Turbo Booster	BPB	SB3PT	HIII-6YO	484.7	45.9	*568*	620
9610	Harmony Youth NB	BPB	SB3PT	HIII-6YO	399.3	52.8	*483*	591
9614	Bubble Bum	BPB	SB3PT	HIII-6YO	338.8*	51.2	*450*	591
9616	Graco Affix NB	BPB	SB3PT	HIII-6YO	478.5*	54.8	*466*	589
9617	Graco Affix NB	BPB	SB3PT	HIII-6YO	573.1*	58.1	*491*	599
9618	Graco Affix NB	BPB	SB3PT	HIII-6YO	534.5*	58.1	*495*	598
9619	Evenflo Amp NB	BPB	SB3PT	HIII-10YO	-	44.8	*500*	652

Note: SB3PT means 3-point belt, *SB2PT* means 2- point belt, *SB3PT&T* means 3-point seat belt and tether, *LATCH* means the full child restraint anchorage system, *LA Only* means lower anchorages of the child restraint anchorage system, *RF* means rear-facing, and *FF* means forward-facing.
*HIC was calculated using a truncated acceleration pulse because of head strikes with rear seat structure during the rebound phase of the test.

Comparison of sled tests on the initial (V1) and proposed (V2) standard seat assemblies with the same dummy restrained in the same or similar CRS model show that dummy performance measures were similar in both standard seat assemblies (see Table 17).

Paired T-test of rear-facing infant and convertible CRS models indicate that at a 95 percent confidence level, the HIC and chest acceleration injury measures in rear-facing infant and convertible CRS tests using the CRABI 12 MO and HIII–3YO dummy on V1 were not significantly different from those from tests on V2.

Paired T-test of each of the HIII–3YO and HIII–6YO performance measures in Table 17 showed no significant difference (95 percent confidence level) when tested on V1 compared to V2, except for knee excursions of the HIII–6YO. Knee excursions of the HIII–6YO were on average 59 mm higher on the V1 standard seat assembly than on the V2 seat assembly.

Paired T-test of each of the HIII–6YO head and knee excursions showed no significant difference (95% confidence level) when tested on the V1 and proposed (V2) standard seat assemblies. HIC results showed a significant change ($p<0.01$) but HIC measures were well within the head injury threshold level of 1,000. Only one paired test was performed using the HIII–10YO dummy; therefore, a paired T-test was not possible.

BILLING CODE 4910–59–P

Table 17. Results of paired sled tests with standard seat assemblies V1 and V2

Vehicle Database	Seat Name	Orientation	Installation Method	Dummy	Bench Design	HIC 36	Rel. Change (%)	Chest Accel. (g)	Rel. Change (%)	Head Excursion (mm)	Rel. Change (%)	Knee Excursion (mm)	Rel. Change (%)
						1000		60		720 (w/ tether) 813 (w/o tether)		915	
8916	Britax B-Safe	RF Infant	LA Only	12 MO CRABI	V1	493.1	21	45.0	-8	-	-	-	-
9608	Britax B-Safe 35	RF Infant	LA Only	12 MO CRABI	V2	598.2		41.6		-		-	
8918	Safety1st Onboard 35	RF Infant	SB3PT	12 MO CRABI	V1	420.6	-13	49.6	-16	-	-	-	-
9609	Safety1st Onboard 35 Air	RF Infant	SB3PT	12 MO CRABI	V2	363.9		41.7		-		-	
8924	Evenflo Tribute	RF Convertible	LA Only	HIII-3YO	V1	598.4	-14	42.7	14	-	-	-	-
9617	Evenflo Tribute	RF Convertible	LA Only	HIII-3YO	V2	512.2		48.8		-		-	
8928	Alpha Omega Elite	RF Convertible	SB3PT	HIII-3YO	V1	488.2	46	44.1	-2	-	-	-	-
9614	Alpha Omega Elite	RF Convertible	SB3PT	HIII-3YO	V2	711.1		43.4		-		-	
8931	Graco My Ride 65	RF Convertible	SB3PT	HIII-3YO	V1	446.5	8	50.2	-2	-	-	-	-
9615	Graco My Ride 65	RF Convertible	SB3PT	HIII-3YO	V2	482.5		49.3		-		-	

Table 17. Results of paired sled tests with standard seat assemblies V1 and V2 – Continued

Vehicle Database	Seat Name	Orientation	Installation Method	Dummy	Bench Design	HIC 36	Rel. Change (%)	Chest Accel. (g)	Rel. Change (%)	Head Excursion (mm)	Rel. Change (%)	Knee Excursion (mm)	Rel. Change (%)
						1000		**60**		**720 (w/ tether) 813 (w/o tether)**		**915**	
8934	Cosco Scenera	FF Convertible	LA Only	HIII-3YO	V1	406.4	44	47.5	-10	639	0	745	-32
9619	Cosco Scenera NEXT	FF Convertible	LA Only	HIII-3YO	V2	585.8		42.7		640		504	
8927	Alpha Omega Elite	FF Convertible	LATCH	HIII-3YO	V1	402.0	-4	39.9	18	591	4	667	-2
9618	Alpha Omega Elite	FF Convertible	LATCH	HIII-3YO	V2	384.1		47.0		612		652	
8929	Evenflo Tribute	FF Convertible	SB3PT	HIII-3YO	V1	410.7	10	44.4	-5	606	-1	694	-4
9620	Evenflo Tribute	FF Convertible	SB3PT	HIII-3YO	V2	453.2		42.3		603		664	
8910	Evenflo Titan Elite	FF Convertible	LA Only	HIII-6YO	V1	566.0	-8	34.7	4	**815**	-3	897	-14
9615	Evenflo Titan	FF Convertible	LA Only	HIII-6YO	V2	523.5 *		36.0		792		773	
8914	Graco My Ride 65	FF Convertible	LATCH	HIII-6YO	V1	398.6	16	41.8	1	520	15	775	-7
9601	Graco My Ride 65	FF Convertible	LATCH	HIII-6YO	V2	462.9		42.3		598		721	
8915	Britax Marathon	FF Convertible	SB3PT	HIII-6YO	V1	668.4	0	44.4	-14	728	0	843	-11
9602	Britax Marathon	FF Convertible	SB3PT	HIII-6YO	V2	671.5		38.1		725		749	

Table 17. Results of paired sled tests with standard seat assemblies V1 and V2 – Continued

Vehicle Database	Seat Name	Orientation	Installation Method	Dummy	Bench Design	HIC 36	Rel. Change (%)	Chest Accel. (g)	Rel. Change (%)	Head Excursion (mm)	Rel. Change (%)	Knee Excursion (mm)	Rel. Change (%)
						1000		**60**		**720 (w/ tether) 813 (w/o tether)**		**915**	
8920	Recaro Performance Ride	FF Convertible	SB3PT	HIII-6YO	V1	600.1	19	47.1	-3	723	-3	813	-7
9604	Recaro Performance Ride	FF Convertible	SB3PT	HIII-6YO	V2	714.3		45.7		705		754	
8919	Graco Nautilus	FF Convertible	SB3PT	HIII-6YO	V1	457.6	19	45.4	-5	691	-4	780	-7
9611	Graco Nautilus	FF Convertible	SB3PT	HIII-6YO	V2	*546.7*		*43.2*		*665.0*		*728.6*	
9612	Graco Nautilus	FF Convertible	SB3PT	HIII-6YO	V2								
9613	Graco Nautilus	FF Convertible	SB3PT	HIII-6YO	V2								
8930	Alpha Omega Elite	FF Convertible	SB3PT &T	HIII-6YO	V1	471.4	-2	40.3	10	596	10	707	1
9608	Alpha Omega Elite	FF Convertible	SB3PT&T	HIII-6YO	V2	461.1		44.3		654		711	
8916	Chicco Nextfit	FF Convertible	SB3PT&T	HIII-6YO	V1	389.7	10	41.9	-7	626	2	776	-5
9605	Chicco Nextfit	FF Convertible	SB3PT&T	HIII-6YO	V2	429.9		39.1		639		739	

Table 17. Results of paired sled tests with standard seat assemblies V1 and V2 – Continued

Vehicle Database	Seat Name	Orientation	Installation Method	Dummy	Bench Design	HIC 36	Rel. Change (%)	Chest Accel. (g)	Rel. Change (%)	Head Excursion (mm)	Rel. Change (%)	Knee Excursion (mm)	Rel. Change (%)
						1000		60		720 (w/ tether) 813 (w/o tether)		915	
8924	Cosco Highrise Booster NB	BPB	SB3PT	HIII-6YO	V1	289.9	54	42.8	12	510	-6	561	2
9603	Cosco Ambassador NB	BPB	SB3PT	HIII-6YO	V2	446.9		47.9		477		575	
8927	Bubble Bum	BPB	SB3PT	HIII-6YO	V1	194.9	74	48.8	5	541	-17	598	-1
9614	Bubble Bum	BPB	SB3PT	HIII-6YO	V2	338.8 *		51.2		450		591	
8922	Graco Turbo Booster	BPB	SB3PT	HIII-6YO	V1	361.1	34	38.6	19	562	1	584	6
9609	Graco Turbo Booster	BPB	SB3PT	HIII-6YO	V2	484.7		45.9		568		620	
8926	Harmony Youth NB	BPB	SB3PT	HIII-6YO	V1	297.9	34	43.3	22	551	-12	604	-2
9610	Harmony Youth NB	BPB	SB3PT	HIII-6YO	V2	399.3		52.8		483		591	
8921	Graco Nautilus	BPB	SB3PT	HIII-10YO	V1	-	-	43.1	8	600	-4	754	0
9602	Graco Nautilus	BPB	SB3PT	HIII-10YO	V2	-		46.7		574		758	

Note: SB3PT means 3-point belt, *SB3PT&T* means 3-point seat belt and tether, *LATCH* means the full child restraint anchorage system, *LA Only* means lower anchorages of the child restraint anchorage system, *RF* means rear-facing, *FF* means forward-facing and *BPB* means belt positioning booster seat.
Performance measures in italics represent average values of repeated tests.
*HIC was calculated using a truncated acceleration pulse because of head strikes with rear seat structure during the rebound phase of the test.

Three CRS models (Evenflo Nurture, Graco Nautilus, and Graco Affix) were tested three times on the proposed standard seat assembly (V2) to evaluate repeatability of the sled tests. Results showed that the coefficient of variation

(CV) of the injury measures was under 10 percent, which is repeatable (see Table 18).

Table 18. Coefficient of variation (CV) in repeat sled tests using the proposed standard seat assembly (V2)

Vehicle Database	Seat Name	Orientation	Installation Method	Dummy	HIC 36	Chest Accel. (g)	Head Excursion (mm)	Knee Excursion (mm)
					1000	60	813 (w/o tether)	915
9610	Evenflo Nurture	RF Infant	LA Only	12 MO CRABI	680	48	-	-
9611	Evenflo Nurture	RF Infant	LA Only	12 MO CRABI	685	50	-	-
9612	Evenflo Nurture	RF Infant	LA Only	12 MO CRABI	721	50	-	-
				Std Dev	18	1		
				Average	695	49		
				%CV	2.6%	1.8%		
9611	Graco Nautilus	FF Convertible	SB3PT	HIII-6YO	570	44	*664*	725
9612	Graco Nautilus	FF Convertible	SB3PT	HIII-6YO	535	42	*656*	721
9613	Graco Nautilus	FF Convertible	SB3PT	HIII-6YO	535	43	*676*	740
				Std Dev	17	1	8	8
				Average	547	43	665	729
				%CV	3.1%	1.5%	1.3%	1.1%
9616	Graco Affix NB	BPB	SB3PT	HIII-6YO	479	55	*466*	589
9617	Graco Affix NB	BPB	SB3PT	HIII-6YO	573	58	*491*	599
9618	Graco Affix NB	BPB	SB3PT	HIII-6YO	535	58	*495*	598
				Std Dev	39	2	12	5
				Average	529	57	484	595
				%CV	7.3%	2.7%	2.6%	0.8%

Note: SB3PT means 3-point belt, *LA Only* means lower anchorages of the child restraint anchorage system, *RF* means rear-facing, *FF* means forward-facing and *BPB* means belt positioning booster seat.

BILLING CODE 4910–59–C

The higher seat back in the V2 seat assembly was intended to reduce dummy head contact with rear seat structure of the seat assembly that was observed in the V1 seat assembly. While the number of head contacts with the rear seat structure were reduced compared to the V1 assembly, head contact still occurs in the V2 seat assembly when testing backless booster seats with the HIII–6YO dummy. For these tests, the HIC calculation was made using a head acceleration pulse truncated between 175–200 msec that corresponded to a time in the rebound phase before the head impact with the seat support structure. NHTSA seeks comment on whether, in the FMVSS No. 213 compliance test, HIC should be computed for backless booster seats tested with the HIII–6YO dummy using an acceleration pulse that is truncated to 175 msec.

Summary of All Sled Test Performed on the Proposed Seat Assembly (V2)

NHTSA performed 40 tests using 24 CRS models and 10 makes using the proposed seat assembly (V2). Results showed the following:

- Rear-facing CRSs including infant carriers and convertibles tested with the CRABI–12MO or the HIII–3YO dummies: Six (6) CRS models were tested with the CRABI–12MO dummy and 4 were tested with the HIII–3YO dummy. All the CRSs tested met all the performance requirements.
- Forward-facing CRSs tested with the HIII–3YO dummy: One (1) CRS model was tested with tether attached and two (2) CRS models were tested without tether attached. All CRSs tested met all the performance requirements.
- Forward-facing CRSs tested with the HIII–6YO dummy: Four (4) CRSs tested with the tether attached met all the performance requirements. Four (4) CRS models were tested without the tether attached. All met all the performance requirements.
- Forward-facing CRSs tested with the HIII–10YO dummy: One (1) CRS model was tested with the tether attached and 2 CRS models were tested without the use of the tether. The CRS tested with the tether attached met all performance requirements. The CRSs tested without the tether met all performance requirements, except for one that exceeded the head excursion limit.
- Booster seats with the HIII–6YO dummy: Six (6) booster seat models were tested and all met all performance requirements.
- Booster seats with the HIII–10YO dummy: Three (3) booster seat models were tested and all met all performance requirements.

VIII. Communicating With Today's Parents

NHTSA proposes to amend several of FMVSS No. 213's owner information and labeling requirements to improve communication with today's CRS owners.

a. CRS Owner Registration

1. Background

NHTSA established a CRS owner registration program in FMVSS No. 213 (S5.8) to increase the ''completion rate'' of recalled restraints, *i.e.,* the percentage of recalled units sold to consumers for which the consumer contacts the manufacturer for free remedy of the defect or noncompliance.[76] Prior to the registration program in FMVSS No. 213, there was a 10 to 13 percent completion rate for child restraint recalls.

NHTSA believed that the CRS completion rate could be increased by disseminating recall information directly to individual owners. Prior to the program, consumers were only indirectly notified of a safety recall by notice to the general public. At the same time, CRS owners were eager to know if their CRS was recalled and were highly motivated to remedy their CRSs if the restraints had been recalled.[77] Given this interest, NHTSA believed that owners were not completing the remedy because they were unaware that their CRS had been recalled. NHTSA adopted the registration program to facilitate direct notification of owners in a recall campaign.

There are three aspects to the registration program: (a) Manufacturers' providing a registration form to purchasers of new CRSs; (b) labeling on the CRS and in the owner's manual to notify and register owners who did not use the mail-in card (this particularly targets second-hand owners of the CRS); and (c) recordkeeping requirements for manufacturers to maintain registrants' contact information for 6 years in case a defect or noncompliance arose with the CRS leading to a safety recall (49 CFR part 588, ''Child restraint systems recordkeeping requirements''). This NPRM proposes changes to program aspects (a) and (b).

With regard to (a) above, FMVSS No. 213 requires manufacturers to provide a standardized, postage-paid registration form with each CRS.[78] The Agency designed the form in part using information obtained in a NHTSA study of consumers' attitudes about the intended program.[79] The researchers found that focus group participants—

> [I]ndicated that they would be most likely to return a pre-addressed, postage-prepaid card with an uncluttered graphic design that clearly and succinctly communicates the benefits of recall registration, differentiates itself from a warranty registration card, and requires minimal time and effort of the participant's part.

The study also showed that participants reacted favorably to the idea of being assured by the manufacturer that their names would not be placed on a mailing list if they registered their restraints.

In view of the study's findings, NHTSA standardized the form's text and layout to increase the likelihood that the owners would register.

The form consists of two parts (see Figures 9a and 9b of FMVSS No. 213). The first part (''information card'') contains a message on the importance of registering the CRS and instructions for registering.[80] The information card is intended to motivate owners to register.

The second part (''mail-in card'') is to be mailed in by the owner to register. On the mail-in card, manufacturers must preprint their return address and information identifying the model name or number of the CRS to which the form is attached, so that owners do not need to look up and provide that information themselves (a possible impediment to completing the registration). The card must have distinct spaces for the owner to fill in his/her name and address and must use tint to highlight to the owner that minimal input is required to register. To distinguish the mail-in card from a warranty card or some kind of advertisement material, the standard prohibits any other information from appearing on the card, except for identifying information that distinguishes a particular CRS from other systems of that model name or number. The card must meet minimum U.S. Postal Service size and thickness specifications so that it can be mailed as a postcard. To encourage consumers to mail back the card, manufacturers must pay the postage.

[76] Final rule, 57 FR 41428, September 10, 1992. NHTSA also issued the rule to assist the agency in determining whether manufacturers met their recall notification responsibilities under the Vehicle Safety Act, and to motivate owners to register CRSs for recall notification purposes.

[77] NPRM, February 19, 1991, 56 FR 6603, 6604.

[78] The form must be attached to a contactable surface of the CRS so that the owner will notice the form and need to handle it physically.

[79] See March 9, 1993 final rule discussion of focus group testing by National Analysts, ''Child Safety Seat Registration: The Consumer View,'' February 1991, 57 FR at 41426.

[80] In 2005, NHTSA amended the requirements to permit information regarding online registration to be included on this part of the owner registration form (September 9, 2005; 70 FR 53569).

2. Overview

The CRS owner registration program has had mixed success. Prior to the registration program in FMVSS No. 213, there was a 10 to 13 percent completion rate for child restraint recalls. The average recall completion rate is about 40 percent in recent years, which, while much higher than that before the program, is still low compared to the completion rate for vehicle recalls.[81] When NHTSA issued the final rule adopting the registration program (1992), the Consumer Product Safety Commission (CPSC) had information showing a return rate for warranty cards of 20 to 30 percent for cards that did not have postage paid and 40 percent for cards that had postage paid. The current average registration rate for child restraint systems is only 23 percent, even with a postage-paid card.

NHTSA's intention in issuing this NPRM is to raise the 23 percent CRS owner registration rate. By raising the registration rate, the Agency seeks to raise the CRS recall completion rate.

NHTSA is taking graduated steps to raise the CRS owner registration rate. NHTSA's CRS registration program primarily involves the interaction between the CRS manufacturer and the CRS owner; the primary instrument enabling and facilitating that interaction is the registration form required by S5.8 of the standard.[82]

CRS manufacturers have expressed to NHTSA their interest in exploring different registration methods, given the advances in communication technologies. They would like to optimize the design of the registration form to increase registrations. However, the current registration form requirements prevent CRS manufacturers from changing the language and format of the form to capture the consumer's interest and persuade them to register.

In response, the agency is proposing to provide flexibility to CRS manufacturers in the content and format of the form. NHTSA believes that manufacturers will take advantage of additional flexibilities to craft more optimized and effective forms of communication that will lead to higher rates of registration without introducing consumer confusion that could have an adverse effect on registration. The Agency requests comment on this assumption for all aspects of the proposed changes here.

Twenty-eight (28) years have passed since the final rule[83] establishing the registration program for FMVSS No. 213. Since that time, a generation of children has grown to become the new parents of today. This new generation grew up with and continues to interact with vast, rapidly-changing advancements in electronic communication and information technology. To make FMVSS No. 213 more responsive to the communication preferences and practices of today's parents, this NPRM would provide manufacturers leeway to use additional modern and creative means of outreach and information exchange in an effort to increase owner registration rates. NHTSA's purpose in allowing this flexibility is to allow CRS manufacturers the opportunity to cultivate their method of communicating with their customer-caregivers and to use innovative ways to get their customers to register.

At the same time, however, NHTSA believes that the registration form also must be designed to meet the needs of owners who may not have access to or may not be comfortable with modern electronic means of communication. The Agency has drafted the proposed amendatory language in a way that maintains features of the current form for owners who would register by mail.

NHTSA also recognizes that reducing the restrictions on the content and format of the form reduces the standardization of the form, which raises some concerns. The standardized registration form is readily recognizable, easy to understand and designed with carefully considered text and formatting features. When manufacturers are given substantial leeway to design content and format, it introduces a risk that some designs may be confusing or ineffective. This proposal provides more flexibility but also limits certain aspects of design that NHTSA believes would be ineffective, such as advertisements on the form, and the Agency requests comment on whether any other aspects should be similarly prohibited. Likewise, the Agency requests comment on whether any of the design aspects that the agency has proposed to cease being standardized should, instead, remain standardized.

Further, in the event NHTSA finalizes the proposal to increase flexibility here, NHTSA anticipates that it will monitor the content and format that manufacturers use on the forms to see if more standardization is needed. Standardization might be appropriate not only to disallow confusing or ineffective designs, but to promote particularly effective content and format that have resulted in increased registration rates.

3. Proposed Changes to the Registration Program

i. Information Card

The information card is the top part of the two-part registration form shown in Figures 9a and 9b of FMVSS No. 213. The size, font, color, and layout of the information card are currently prescribed in Figures 9a and 9b, as is the attachment method (fold/perforation) of the information card to the lower part of the form (the mail-in card). The information card sets forth: (a) Prescribed wording advising the consumer of the importance of registering; (b) prescribed instructions on how to register; and (c) prescribed statements that the mail-in card is pre-addressed and that postage is already paid.

The Agency proposes to remove the restrictions on size, font, color, layout, and attachment method of the information card portion. These changes would provide flexibility to CRS manufacturers on how the required information is presented to the consumer. The Agency believes that these changes have the potential to increase registration rates, but does not have information suggesting the extent to which this would occur and requests comments on what effect, in any, these changes will have on increasing registration rates. Comments are also requested on whether a two-part registration form format is warranted. Assuming it is, this NPRM proposes that manufacturers can decide how the information card is attached to the mail-in card. The agency believes that the information card should be easily detachable from the mail-in card portion, without the use of scissors and the like.

In addition, the agency is proposing to amend the requirements in (a) and (b) above such that the wording would no longer be prescribed. Instead, CRS manufacturers would be given leeway to use their own words to convey the importance of registering the CRS and to instruct how registration is achieved. NHTSA would allow statements explaining how consumers can use

[81] The average recall completion rate for vehicles for the 10-year period from 2006 to 2015 is 79 percent.

[82] This NPRM focuses on improving the registration form to enhance the interaction between manufacturers and owners but the agency asks for comment on ways registration rates could possibly improve by the involvement of third parties, such as retailers and other dealers. NHTSA is interested in learning about programs that have involved point-of-sale registration, the practicalities of the arrangement (*e.g.,* how the merchant conveyed the owner information to the manufacturer), and the successes and challenges associated with them.

[83] Final rule, 57 FR 41428, September 10, 1992.

electronic (or any other means) of registering, as long as instructions are provided on using the paper card for registering (including that the mail-in card is pre-addressed and that the postage is pre-paid). NHTSA requests comment on any benefits or safety risks of allowing manufacturers to provide their own language here.

NHTSA also proposes to permit or possibly require a statement that the information collected through the registration process will not be used by the manufacturer for any purpose other than contacting the consumer in the event of a recall. Comments are requested on NHTSA's requiring such a statement. NHTSA also proposes to continue to prohibit any other information unrelated to the registration of the CRS, such as advertising or warranty information.

These proposed changes to the information card, if adopted, would affect the collection of information, ''Consolidated Child Restraint System Registration, Labeling and Defect Notification,'' OMB Control Number: 2127–0576. This NPRM includes a request for comment on the collection of information. Comments are requested from manufacturers on whether they plan to take advantage of this increased flexibility in providing information to consumers to motivate them to register their child restraints.

ii. Mail-In Card

The Agency proposes that the mail-in card portion of the form (the lower half of the form depicted in Figures 9a and 9b of FMVSS No. 213) does not need to be changed.[84] The current mail-in card has the basic elements needed for registering by mail, including the necessary owner contact information, preprinted CRS restraint information (Figure 9a), manufacturer's preprinted address and prepaid postage information (Figure 9b), and minimum size of the card (important so it can be mailed to the manufacturer as a postcard).

NHTSA requests comment on whether other elements should be added to or eliminated from the currently required mail-in card, and if leeway should be given on how the card is formatted.

iii. Electronic Registration Form

FMVSS No. 213 currently permits manufacturers to provide a web address on the information card to enable owners to register online (S5.8.1(d)). The web address must provide a direct link to an ''electronic registration form'' meeting the requirements of S5.8.2 of the standard. Under S5.8.2, the electronic registration form must conform to a specified format and have certain content, including: (a) A prescribed message to advise the consumer of the importance of registering; (b) prescribed instructions on how to register; and, (c) fields to record the CRS's model name or number and date of manufacture, and the owner's name, mailing address, and optionally, the owner's email address.

This NPRM proposes to amend S5.8.1(d) so that the electronic form may be reached by using methods other than a web address. For instance, should consumers be able to access the electronic form by a code (such as a QR[85] code)? NHTSA is also considering amending S5.8.l to delete the specific reference to an ''electronic registration form,'' and, instead, reference any electronic means to register owners.

With regard to the requirements for the electronic registration form (S5.8.2), NHTSA proposes to change the requirements for elements (a) and (b) above, from NHTSA-prescribed messages to messages crafted by the CRS manufacturer conveying the importance of registering and instructions on how to register. Comments are requested on whether S5.8.2 should be further amended, possibly by rescinding some of the requirements in that section. What changes are needed to allow innovative electronic methods for registering CRSs? How can FMVSS No. 213 facilitate use of those technologies? What benefits or safety risks would be introduced by allowing these flexibilities?

iv. Information on Labels and in Owners' Manuals

NHTSA also proposes that provisions in FMVSS No. 213 requiring information on registering CRSs on child restraint labels[86] and in owners' manuals[87] also be amended in the manner discussed above.

b. Information on Correctly Using CRSs

NHTSA proposes to lessen restrictions in labeling and owner's manual requirements so that manufacturers have more flexibility in providing information on correct CRS use (S5.5, S5.6). The agency intends for manufacturers to determine the words and diagrams that most effectively instruct consumers on using their CRSs and to determine how the labeling should be presented to communicate best with consumers. The goal of the proposal is to increase the correct use of CRSs.

1. Removing Requirements for Specific Wording

FMVSS No. 213 requires manufacturers to label CRSs with information on the maximum height and weight of the children who can safely occupy the system (S5.5.2(f)). NHTSA believes there is a continued need for this ''use information'' to be permanently labeled on CRSs. However, because S5.5.2(f) prescribes specific statements for the label that have become dated and that are not optimized for particular CRS designs and features, the agency proposes to rescind the requirement that they be used. Instead, NHTSA proposes requiring that the information be provided for each mode the CRS can be used (rear-facing, forward-facing, booster) and, subject to the conditions discussed below, manufacturers would have the flexibility to provide the use information in statements or a combination of statements and pictograms at locations that they deem most effective.

The proposed conditions are based on sound best practice recommendations developed by the child passenger safety community.

Conditions on the Provided Use Information

i. NHTSA and the entire child passenger safety community strongly recommend that children up to the age of 1 be kept riding rear-facing at least up to the age of 1. NHTSA further recommends that children 1 to 3 years of age ride rear-facing as long as possible, until they reach the manufacturer-recommended upper height or weight limit for riding rear-facing in the CRS, and that children 4 to 7 years of age ride forward-facing in CRSs with internal harnesses as long as they are within the height and weight limits allowed by the CRS's manufacturer.[88]

With these recommendations in mind, NHTSA proposes that the use information manufacturers provide for CRSs that can be used in multiple ''modes'' (rear-facing, forward-facing, booster) must provide information about the weight and height of children for

[84] Typographical errors would be corrected, such as the spelling of the words ''postage'' and ''mailed.''

[85] QR code means Quick Response Code. This is a matrix barcode similar to a standard Universal Product Code (UPC) barcode but has greater storage capacity. Usually QR codes are used for product tracking, item identification and general marketing.

[86] See S5.5.2(m) and S5.5.5(k).

[87] See S5.6.1.7 and S5.6.2.2.

[88] *https://www.safercar.gov/parents/CarSeats/Right-Car-Seat-Age-Size.htm?view=full.*

each mode of use. Currently S5.5.2(f) requires the *overall* maximum and minimum height and weight ranges of the children for whom the CRS is recommended, which are not broken down by modes of use. The requirement to parse the height and weight ranges *by mode* would result in clearer instructions on when to turn a child forward-facing, so that children are not turned forward-facing too soon.

To illustrate, instead of stating that a convertible (a CRS that can be used rear-facing and forward-facing) is for use by children weighing 5 to 65 lb (2.3 to 29.5 kg) and with heights up to 48 inches (121.9 centimeters (cm)), the statements or a combination of statements and pictograms would indicate that the CRS is used rear-facing by children weighing 5 to 40 lb (2.3 to 18.1 kg) and with heights up to 48 inches (121.9 cm), and forward-facing by children weighing 27 to 65 lb (12.2 to 29.5 kg) and with heights up to 48 inches (121.9 cm). This information may be provided in combination with pictograms on labels already provided on the CRS, as shown in Figure 8. Evenflo and SafeRide News have requested this amendment in a petition for rulemaking, *supra.* NHTSA grants this part of the petition.

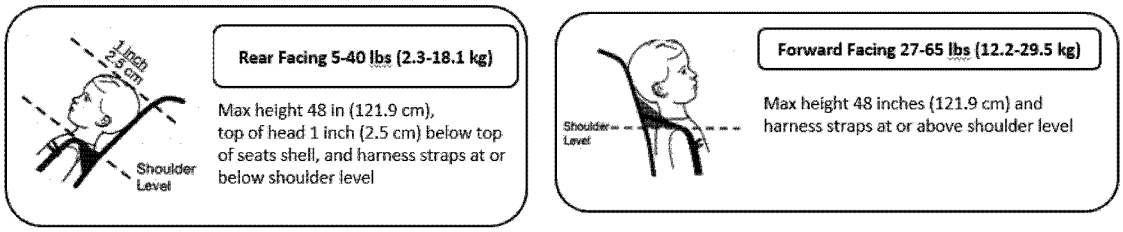

Figure 8. Example of manufacturer-recommended weight and height of children for rear-facing and forward-facing modes of use, currently included on labels voluntarily provided by some manufacturers.

ii. Given the need for children to be kept rear-facing at least up to the age of 1, NHTSA proposes that CRSs may only be recommended for forward-facing use by children weighing a minimum of 12 kg (26.5 lb). The 26.5 lb value corresponds to the weight of a 95th percentile 1-year-old. This provision would apply to CRSs designed to be used only forward-facing and to CRSs that are designed for use rear-facing for infants and forward-facing for older children (*i.e.,* the latter restraints cannot use a ''turnaround weight'' that is less than 12 kg (26.5 lb)).

The purpose of this provision is to increase the number of children younger than 1 that are transported rear-facing, because a child under 1 is significantly safer rear-facing than forward-facing in a crash. FMVSS No. 213 currently sets the minimum weight recommendation for a child in a forward-facing CRS at 9 kg (20 lb) (S5.5.2(k)(2)), but that weight is too low to capture a sufficiently full population of children 1-year-old and younger. A 50th percentile 1-year-old weighs 10 kg (22 lb); hence the 9 kg (20 lb) threshold is unsatisfactory because it does not cover more than half the children under 1 year of age. The change to 12 kg (26.5 lb) would capture almost all 1-year-olds and would therefore increase the likelihood that children under 1 will be transported rear-facing.

Another benefit from the 12 kg (26.5 lb) minimum weight would be to increase the likelihood that more young toddlers would be transported rear-facing. Rear-facing CRSs support the infant or toddler's posterior torso, neck, head, and pelvis and help to distribute crash forces over the entire body. Developmental considerations, including incomplete vertebral ossification, more horizontally oriented spinal facet joints, and excessive ligamentous laxity put young children at risk for head and spinal cord injury. Rear-facing CRSs address this risk by supporting the child's head, preventing the relatively large head from moving independently of the proportionately smaller neck.

Although NHTSA recommends that children 1 to 3 ride in rear-facing child restraints as long as possible to address the above risks, many caregivers are not following this recommendation and instead appear to be following labeling instructions that specify a turnaround weight of 9kg (20 lb).[89] NCRUSS [90] data indicate that, among children weighing less than 9 kg (20 lb), 93 percent were restrained in a rear-facing CRS, yet among children weighing 9 to 13.1 kg (20 to 29 lb), only 22 percent were restrained in a rear-facing CRS. The weight of 12 kg (26.5 lb) corresponds to the weight of a 75th percentile 18-month-old (18MO) and about a 50th percentile 2-year-old. Raising the turnaround weight to 12 kg (26.5 lb) would help keep a larger percentage of very young children restrained rear-facing.

As explained in the Appendix to this NPRM, NHTSA estimates 0.7 to 2.3 lives saved and 1.0 to 3.5 moderate to serious injuries prevented by this amendment.

iii. NHTSA currently recommends that children riding forward-facing should be restrained in CRSs with internal harnesses (car safety seats) as long as possible before transitioning to a booster seat. FMVSS No. 213 permits booster seats only to be recommended for children weighing at least 13.6 kg (30 lb) (S5.5.2(f)). Based on an analysis of field data and other considerations, NHTSA believes the 13.6 kg (30 lb) value should be raised. Thirty pounds corresponds to the weight of a 50th percentile 3-year-old, and to the weight of a 95th percentile 18-month-old; *i.e.,* children too small to be safely protected in a booster seat.

NHTSA proposes to amend S5.5.2(f) to raise the 13.6 kg (30 lb) limit to 18.2 kg (40 lb), which is greater than the weight of a 97th percentile 3-year-old (17.7 kg (39.3 lb)) and approximately the weight of an 85th percentile 4-year-old. NHTSA's field data analyses indicate risks associated with booster seat use by 3- and 4-year-old children.[91] The Agency conducted statistical analyses of field data (NASS CDS data from 1998–

[89] As noted above, S5.5.2(k)(2) permits a turnaround weight of 9 kg (20 lb). Although NHTSA meant for that weight to be a minimum, many CRSs use a turnaround weight of only 9kg (20 lb).

[90] ''Findings of the National Child Restraint Use Special Study (NCRUSS),'' *supra.*

[91] ''Booster Seat Effectiveness Estimates Based on CDS and State Data,'' NHTSA Technical Report, DOT HS 811 338, July 2010. *http://www-nrd.nhtsa.dot.gov/Pubs/811338.pdf,* last accessed on October 1, 2018.

2008 and 17 combined years of State data from Kansas, Washington and Nebraska) to estimate the effect of early graduation from CRSs with an internal harness (car safety seats) to booster seats. NHTSA found that among 3- and 4-year-olds, there was as much as a 27 percent increased risk in non-incapacitating to fatal injury when restrained in booster seats compared to car safety seats. The analysis indicated that this effect may be more pronounced for children 3 years old and younger than for older children. These data indicate a need to keep children in CRSs with internal harnesses (car safety seats) until after the child turns 4 years old.[92] NHTSA estimates this change could save 1.2 to 4 lives and prevent 1.6 to 5.2 moderate to serious injuries. In addition, NHTSA's proposed side impact test for CRSs would only apply to child restraints recommended for children weighing less than 18.2 kg (40 lb). Keeping children in car safety seats longer (until at least a weight of 18.2 kg (40 lb)) would enhance their protection in side impacts as well.

2. Labeling of Use Information

The Agency proposes deleting a requirement in S5.5.2(g)(1)(i) that the use information required by S5.5.2(f) must be in a specific warning label. The use information would still be on the CRS in a visible location, but would not have to be part of the ''warning label'' statements. NHTSA tentatively concludes that if S5.5.2(f) is amended as proposed in this NPRM, the use information that S5.5.2(f) provides will be clearer to consumers, and there would not be a need to highlight the information on the specific warning label at issue.

3. Deleting S5.5.2(k)(2)

This NPRM proposes deleting the labeling requirement of S5.5.2(k)(2), as S5.5.2(k)(2) would duplicate the information of S5.5.2(f) if the latter were amended as described above. Both provisions would instruct consumers to use the rear-facing CRS with children weighing under a specified weight limit.

4. Other Requests of Evenflo and Safe Ride News Petition

Evenflo and Safe Ride News (SRN) request that NHTSA amend S5.5.2(k)(2) to reference a turnaround age (of 2 years old). The petitioners refer to the age of 2 based on a then-American Academy of Pediatrics (AAP) recommendation that children use rear-facing CRSs up to at least age 2 or until they reach the highest weight or height of the particular CRS they are using.[93]

NHTSA is denying this request. As explained above, the Agency believes that the label specified by S5.5.2(k)(2) is no longer necessary given the labeling changes proposed in this NPRM, and has proposed deleting that statement. Instead, NHTSA is proposing that manufacturers include statements, or a combination of statements and pictograms, specifying the manufacturer's recommendations for the mass and height ranges of children who can safely occupy the system in each applicable mode (*i.e.,* rear-facing, forward-facing, or booster), subject to NHTSA's amended minimum weight recommendations. NHTSA believes that the proposed change addresses the concerns of Evenflo and SRN's relating to caregiver confusion on the wording of the label, as the requirement to parse the height and weight ranges *by mode* would result in clearer instructions on when to turn a child forward-facing, so that children are not turned forward-facing sooner than recommended.

In addition, the proposed labeling changes align with NHTSA's recommendation that children under age 1 should always ride in a rear-facing car seat, and children 1–3 years old ride rear-facing as long as possible, until they reach the manufacturer-recommended upper height or weight limit for riding rear-facing in the CRS. As discussed above, rear-facing CRSs address the risk of head and spinal cord injury for infants and toddlers, and the longer that these children are transported rear-facing, the longer they can take advantage of the posterior torso, neck, head, and pelvis support that a rear-facing CRS provides.

However, since children of the same age vary by size, NHTSA declines to refer to a hard age on the CRS label. CRSs are made to protect the child occupant based on the management of crash forces based on the child's height and weight, not his or her age. NHTSA's recommendations aim to provide general guidance to the public on what CRSs are appropriate to use during specific child age ranges, as an age-based recommendation is easier for consumers to remember than a weight-based one. Raising the minimum weight for forward-facing CRSs to children that weigh a minimum of 12 kg (26.5 lb), while also including the maximum weight and height for each mode on the label, aligns with NHTSA's recommendations by ensuring children are almost always kept in rear-facing seats until they are at least age 1, while also making clear that children over age 1 who are below the maximum weight and height for a seat's rear facing mode can remain rear-facing. NHTSA continues to recommend that children remain in a rear-facing car seat until he or she reaches the maximum height or weight limit allowed by the CRS manufacturer.

NHTSA believes that it is also important to note that the AAP has since updated their 2011 recommendation on car seat use by removing the specific age 2 milestone.[94] AAP's 2018 best practice recommendation is that, ''All infants and toddlers should ride in a rear-facing CRS as long as possible, until they reach the highest weight or height allowed by their CRS's manufacturer.'' AAP's 2018 recommendation is aligned with NHTSA's recommendation. Accordingly, the Agency believes that, for the CRS label, specifying the appropriate child weight and height ranges is more accurate to identify the child occupant for whom the CRS is designed to protect than specifying an age.

NHTSA is also denying the petitioners' request to delete a requirement that the use information include the heights of the children who can occupy the system safely. The petitioners request that NHTSA delete this requirement because they believe ''overall child height is not the most useful measure.'' The petitioners suggest that consumers be instead directed to ''follow height requirements described in the owner's manual, up to a maximum of ____ inches (____ cm).'' The petitioners believe that the caregiver can determine whether his or her child's height is within the maximum for the seat and can be alerted to important information on height by the CRS owner's manual.

NHTSA denies this request. The Agency does not believe that the caregiver should be referred to the CRS owner's manual for information on the height limits for a child to use the restraint safely, because many consumers do not consult the manual.[95]

[92] A 50th percentile 48-month-old weighs 16.1 kg (35.5 lb).

[93] AAP Updates Recommendation on Car Seats (March 21, 2011), *available at https://web.archive.org/web/20170824075402/https://www.aap.org/en-us/about-the-aap/aap-press-room/pages/aap-updates-recommendation-on-car-seats.aspx.*

[94] Benjamin D. Hoffman, M.D., FAAP, New child passenger safety seat guidance advises kids to rise rear-facing as long as possible; drops age criterion (Aug. 30, 2018), *https://www.aappublications.org/news/2018/08/30/passengersafety083018.*

[95] Findings from NCRUSS (DOT HS 811 679, *https://crashstats.nhtsa.dot.gov/Api/Public/ViewPublication/812142*) indicate that only 66 percent of caregivers consulted the user's manual when installing a child restraint. There was no

The Agency believes that height information should be permanently attached to the CRS where it is readily available and easily accessible.

IX. Streamlining NHTSA's Use of ATDs in Compliance Tests To Reflect CRS Use Today

a. Introduction

To simplify and to make more evaluative NHTSA's compliance testing of CRSs, this NPRM proposes to streamline how the Agency uses ATDs (test dummies) to assess CRS performance. Many of these changes would make the Agency's use of the ATDs more reflective of how CRSs are used today. The proposed changes are discussed below.

By way of background, child restraint systems must meet FMVSS No. 213's performance requirements when dynamically tested with test dummies that represent children of various ages. The current dummies used in compliance testing are the newborn infant, the CRABI–12MO, HIII–3YO, HIII–6YO or the H2–6YO, and the HIII–10-year-old child dummy.

NHTSA selects which test dummy to use based in part on the height and weight of the children for whom the manufacturer recommends for the child restraint (see S7 of FMVSS No. 213). To illustrate, Table 19 below shows which dummies NHTSA uses to test child restraints based on the height and weight recommendations established for the restraint by the manufacturer. If a child restraint is recommended for a range of children whose weight overlaps, in whole or in part, two or more of the weight ranges in the table, the restraint is subject to testing with the dummies specified for each of those ranges. Thus, for example, if a child restraint is recommended for children having weights from 10 kg to 22.7 kg (22—50 lb), it would be subject to testing with the CRABI–12MO, the HIII–3YO, and the HIII–6YO or H2–6YO dummies.

TABLE 19—CURRENT USE OF DUMMIES BASED ON MANUFACTURER'S WEIGHT RECOMMENDATION

[571.213, S7]

CRS recommended for use by children of these weights—	Are compliance tested by NHTSA with these ATDs (subparts refer to 49 CFR part 572)
Weight (W) ≤5 kg (11 lb), Height (H) ≤650 mm (25.5 inches)	Newborn (subpart K).
Weight 5 kg (11 lb) <W ≤10 kg (22 lb), Height 650 mm (25.5 inches) <H ≤850 mm (33.5 inches).	Newborn (subpart K), CRABI–12MO (subpart R).
Weight 10 kg (22 lb) <W ≤18.2 kg (40 lb), Height 850 mm (33.5 inches) <H ≤1100 mm (43.3 inches).	CRABI–12MO (subpart R), HIII–3YO (subpart P).
Weight 18kg (40 lb) <W ≤22.7 kg (50 lb), Height 1100 mm (43.3 inches) <H ≤1250 mm (49.2 inches).	HIII–6YO (subpart N) or H2–6YO (subpart I) (manufacturer's option).
Weight 22.7 kg (50 lb) <W ≤30 kg (65 lb), Height 1100 mm (43.3 inches) <H ≤1250 mm (49.2 inches).	HIII–6YO (subpart N) or H2–6YO (subpart I) (manufacturer's option), and weighted HIII–6YO (subpart S).
Weight greater than 30 kg (65 lb), Height greater than 1250 mm (49.2 inches).	HIII–10YO (subpart T).*

* No HIC measured with HIII–10YO.

(**Note:** CRSs with internal harnesses that weigh more than 30 kg (65 lb) with an ATD are not tested with that ATD on the child restraint anchorage system of the standard seat assembly.)

b. Testing CRSs for Children Weighing 10–13.6 kg (22–30 lb)

Currently under FMVSS No. 213, CRSs labeled for use by children in the weight range 10 kg to 18.2 kg (22 lb to 40 lb) are subject to testing with the CRABI 12MO and the HIII–3YO dummy (S7.1.2(c)). This NPRM proposes to amend these specifications so that child restraints would not be subject to testing with the 3YO dummy unless the recommended weights of children for whom the CRS is marketed is 13.6 to 18.2 kg (30—40 lb). NHTSA proposes this change because, as a practical matter, 3YOs are too large to fit in a CRS recommended for children in the lower end of the 10 to 18.2 kg (22—40 lb) weight range. The intent of this change is to reduce unnecessary test burdens. NHTSA proposes amending S7.1.2(c) by splitting the 10 to 18.2 kg (22—40 lb) weight range into a 10 to 13.6 kg (22—30 lb) and a 13.6 to 18.2 kg (30—40 lb) weight range. CRSs recommended for children in the former range (10 to 13.6 kg (22—30 lb)) would be tested with the CRABI 12MO, while CRSs for children in the latter (13.6 to 18.2 kg (30—40 lb)) would be tested with the HIII–3YO.[96]

NHTSA is particularly mindful of the effect the amendment would have on infant carriers.[97] The current CRS market has infant carrier models recommended for children weighing up to 10 kg (22 lb), 13.6 kg (30 lb), 15.8 kg (35 lb), and 18.2 kg (40 lb) and with child height limits ranging from 736 mm (29 inches) to 889 mm (35 inches). Absent the amendment, these infant carriers would be subject to testing with the HIII–3YO (35 lb) dummy rear-facing. However, the HIII–3YO dummy (stature of 945 mm (37.2 inches)) does not fit easily in infant carriers. Current infant carriers would also likely fail FMVSS No. 213's head containment requirement (S5.1.3.2) with the HIII–3YO without substantial redesign that would add weight, bulk and cost to the CRS.

Given the purpose of infant carriers, there does not seem be a safety need warranting such redesign. Current infant carriers are convenient to use with infants and are popular with parents. The availability and ease-of-use of current carriers may result in more infants riding rear-facing than if the carriers were heavier, bulkier and more expensive.

NHTSA expects that the proposed amendment would not necessitate any design changes in infant carriers. Currently there are a number of infant carriers that are marketed for children weighing up to 15.8 kg (35 lb) or 18.2 kg (40 lb). The Agency expects that manufacturers will reduce the maximum weight recommendations such that the restraints would be

specific detail on what topic in the manual was reviewed.

[96] As a practical matter, most CRS would be subject to testing using at least two ATDs since most CRS are sold for children of weights spanning more than one weight category. A CRS that is recommended for a weight range that overlaps, in whole or in part, two or more of the weight ranges is subject to testing with the ATDs specified for each of those ranges (571.213, S7).

[97] An infant carrier is a rear-facing CRS designed to be readily used in and outside of the vehicle. It has a carrying handle that enables caregivers to tote the CRS plus child outside of the vehicle.

marketed for children up to 13.6 kg (30 lb). Because NHTSA does not believe that the infant carriers are significantly used by children weighing more than 13.6 kg (30 lb),[98] the proposed amendment is not likely to engender an unfulfilled need for the carriers by over-13.6 kg (30 lb) children. On the other hand, if a manufacturer would like to continue marketing its infant carrier for children weighing more than 13.6 kg (30 lb), it may do so, provided it can certify that the CRS can meet the performance requirements of FMVSS No. 213 when tested with the HIII–3YO test dummy. Comments are requested on this issue.

This NPRM also proposes to amend S7.1.2's height specifications for testing with the ATDs so that height categories are consistent with the corresponding weight limits. This is to simplify the standard. This proposal is explained further below.

Currently S7.1.2(b) specifies that the newborn and CRABI–12MO dummies are used to test CRSs recommended for children in a height range from 650 mm to 850 mm. The average height of a 12MO child is 750 mm (29.5 inches), not 850 mm. NHTSA proposes to change the upper end of that height range to 750 mm (29.5 inches), to correspond to the average height of a 12MO child (750 mm (29.5 inches)) (which also is the height of the CRABI–12MO ATD). The revised height range would be part of a new S7.1.1(b).

Similarly, as discussed earlier, proposed S7.1.1(c) specifies that the CRABI–12MO dummy would be used to test a CRS recommended for children weighing 10 to 13.6 kg (22 to 30 lb). A child weighing 13.6 kg (30 lb) on average is about 870 mm (34.3 inches) tall. (The 95th percentile 18MO child weighs about 13.6 (30 lb) and has a corresponding height of about 870 mm (34.3 inches).) Therefore, to make the height specifications for testing with ATDs consistent with the corresponding weight limits, this NPRM proposes that CRSs would be tested with the CRABI–12MO if they are recommended for children in the weight range of up to 13.6 kg (30 lb) or in the height range of up 870 mm (34.3 inches).

c. Testing CRSs for Children Weighing 13.6–18.2 kg (30–40 lb)

This NPRM proposes amendments affecting CRSs labeled for use by children of weights from 13.6 kg to 18.2 kg (30–40 lb). Currently, these CRSs are subject to testing with the CRABI–12MO and the HIII–3YO (S7.1.2(c)).[99] NHTSA has tentatively determined that the CRSs do not need to be tested with the CRABI–12MO, since the 10 kg (22 lb) dummy is not representative of 13.6 to 18.2 kg (30–40 lb) children for whom the restraint is intended.[100] A new S7.1.1(d) would apply to these CRSs.

The new S7.1.1(d) would specify that NHTSA would test CRSs recommended for children in the weight range of 13.6 kg to 18.2 kg (30—40 lb) with the HIII–3YO dummy. Also, to make the height specification for testing with the ATD consistent with the corresponding weight limit proposed in S7.1.1(c), NHTSA proposes to use the HIII–3YO dummy to test CRSs recommended for children in the height range of 870 mm to 1,100 mm (34.3 to 43.3 inches), instead of 850 mm to 1,100 mm (33.5 to 43.3 inches).

d. Testing CRSs for Children Weighing 18–29.5 kg (40–65 lb)

FMVSS No. 213 currently provides child restraint manufacturers the option of having NHTSA use the HIII–6YO or the H2–6YO in compliance tests of CRSs for children weighing 18 to 29.5 kg (40 to 65 lb) (S7.1.3). This NPRM proposes to test these CRSs only with the HIII–6YO. The HIII–6YO is preferred as it is a more biofidelic test device than the H2–6YO dummy, and more and more CRS manufacturers are using the HIII rather than the H2–6YO dummy. Further, it is becoming increasingly difficult to obtain replacement parts for the older H2–6YO dummy.

NHTSA adopted the HIII–6YO in FMVSS No. 213 in response to a mandate in the Transportation Recall Enhancement, Accountability and Documentation (TREAD) Act[101] that directed NHTSA to consider a number of rulemakings to improve CRS safety, including one on incorporating use of the HIII–6YO in FMVSS No. 213 compliance tests. NHTSA incorporated the ATD into FMVSS No. 213 after determining in its rulemaking that the dummy is ''considerably more biofidelic'' than the H2–6YO dummy, and with enhanced capability to measure an array of impact responses never before measured by a child test dummy, such as neck moments and chest deflection.[102]

Problems arose after adoption of the HIII–6YO in FMVSS No. 213, however. The HIII–6YO had been successfully used in low-risk deployment and static suppression compliance tests of advanced air bags under FMVSS No. 208, ''Occupant crash protection.'' However, in the FMVSS No. 213 test environment where no air bag is present, the HIII–6YO exhibited unrealistic chin-to-chest and head-to-knee contact in tests of booster seats, which resulted in inordinately high, often times failing HIC values recorded by the dummy.

NHTSA responded by adopting a provision permitting the optional use of the H2–6YO dummy in place of the HIII–6YO. NHTSA originally intended the matter as an interim measure to provide manufacturers time to adjust to the new ATD, and later, on extension, to provide NHTSA time to develop seating procedures for the dummy.[103] However, in 2011, NHTSA issued a final rule to permit optional use of the H2–6YO ''until further notice.'' The Agency announced that, while the HIII–6YO is an advanced test dummy with state-of-the-art capabilities and is used by some CRS manufacturers in certifying restraints, NHTSA wanted to complete ongoing efforts to improve the HIII–6YO dummy to make it more useful as an FMVSS No. 213 test device before testing child restraints solely with the ATD.[104]

Since 2011, NHTSA has pursued long-term improvements to the biofidelity of the HIII–6YO. Part of NHTSA's work involves development of a Large Omnidirectional Child (LODC) dummy using the HIII–10YO dummy, formulating LODC concepts and mechanisms that can eventually be adapted to the design of a 6YO prototype.[105]

[98] Feedback from child passenger safety technicians involved in child restraint system checks indicates that infants usually outgrow infant carriers because of reaching the height limit of the carrier rather than the weight limit. Further, as an infant reaches a 13.6 kg (30 lb) weight, the weight of the infant and the infant carrier together becomes too heavy for a caregiver to pull out of the vehicle and carry around by a handle. Therefore, parents often switch to a convertible or all-in one CRS as the child weight nears 13.6 kg (30 lb).

[99] The CRABI–12MO is not used to test a booster seat (S7.1.2(c)).

[100] However, if such a CRS were also labeled for use by children weighing less than 13.6 kg (30 lb), then the CRS would be subject to testing with the CRABI–12MO.

[101] November 1, 2000, Public Law 106–414, 114 Stat. 1800.

[102] Final rule, 68 FR 37620, June 24, 2003.

[103] 70 FR 44520, July 28, 2005; 73 FR 45355, August 5, 2008. The Hybrid III ATD was called the ''HIII–6C''and the Hybrid II was called the ''H2–6C'' in these documents.

[104] 76 FR 55825, September 9, 2011.

[105] The improvements in the prototype HIII–10YO LODC dummy include: A head with pediatric mass properties; a neck that produces head lag with free Z-axis rotation at the atlanto-occipital joint; a flexible thoracic spine; multi-point thoracic deflection measurement capability; skeletal anthropometry representative of a seated child; and an abdomen that can directly measure belt loading. More information on the LODC dummy can be found at: *http://www.nhtsa.gov/DOT/NHTSA/NVS/Public%20Meetings/SAE/2016/Development%20of%20the%20LODC%20ATD-SAE2016.pdf.*

Yet also since 2011, new information indicates NHTSA may not need to wait longer to use the HIII–6YO solely as the 6YO child ATD in FMVSS No. 213 compliance tests. While developing this NPRM, NHTSA tested the HIII–6YO in booster seats and in CRSs with internal harnesses (''harnessed-CRSs'') on the proposed standard seat assembly and found that the ATD did not exhibit high head injury measures and high head acceleration spikes in the dynamic tests. Chin-to-chest contact occurred at times, but it was a significantly softer contact than the contact observed in tests on the current seat assembly. On the proposed seat assembly, the high HIC values and the high head acceleration spikes that had been measured by the dummy on the current seat assembly were absent. NHTSA believes this change is due to the firmer seat cushion on the proposed assembly that prevents the CRS from bottoming out against the seat frame.

The difference in head accelerations due to the different seat assemblies is illustrated below. Figure 9 shows the head accelerations of the HIII–6YO in tests on the current FMVSS No. 213 standard seat assembly in booster seats (solid lines), and on the proposed standard seat assembly in booster seats (dashed lines) and in forward-facing harnessed-CRSs (dotted lines). As shown in the figure, the peak head accelerations curves of the HIII–6YO in tests with the proposed standard seat assembly are lower in magnitude than in tests with the current seat assembly and show the absence of severe head acceleration spikes.[106]

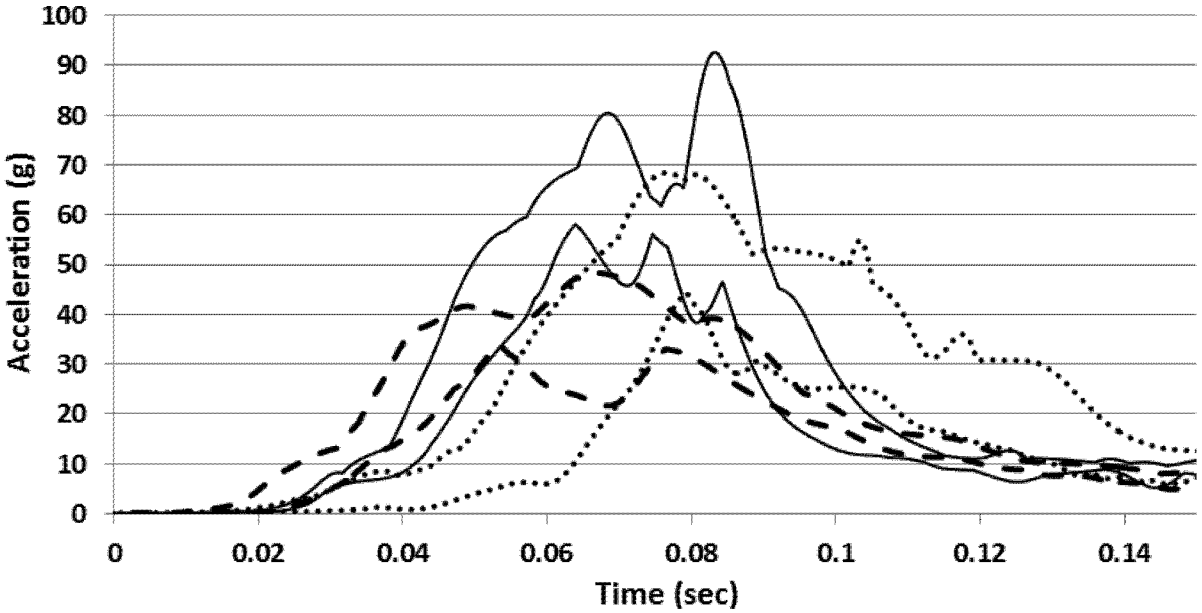

Figure 9. Head acceleration time histories and minimum and maximum corridors in tests with the HIII-6YO dummy with dummy restrained in (1) booster seats on current FMVSS No. 213 standard seat assembly (solid line), (2) booster seats on proposed standard seat assembly (dashed line) and (3) forward-facing CRSs with and without tether attached on proposed standard seat assembly (dotted line).

Those data are consistent with other data showing that the HIII–6YO dummy measures lower peak head acceleration and HIC on the proposed seat assembly than on the current FMVSS No. 213 assembly. As shown in Table 20 below, the average peak head acceleration and average HIC of the HIII–6YO on the proposed standard seat assembly were 52.9 g and 447.4, respectively. The average peak head acceleration and average HIC of the HIII–6YO dummy in tests conducted on the current FMVSS No. 213 standard seat assembly were 77.6 g and 976.2, respectively. This amounted to an average peak head acceleration that was 31.8 percent lower and an average HIC that was 54.2 percent lower when the proposed standard seat assembly is used versus the current seat assembly. Again, we attribute the overall change in magnitude in peak head acceleration to the stiffer seat cushion foam in the proposed standard seat assembly.

BILLING CODE 4910–59–P

[106] Full detail of the sled tests results are discussed in Section VII of this preamble, *supra.*

Table 20. Peak head acceleration and HIC measures in tests performed with the HIII-6YO and H2-6YO on the current FMVSS No. 213 seat assembly and tests performed with the HIII-6YO dummy on the proposed standard seat assembly.

Bench	Test No and CRS Model	Dummy	Time of peak head acceleration (sec)	Peak head acceleration (g)	HIC
FMVSS No. 213 (Research VRTC)	6769 - Safety 1st Apex 65	HIII	0.070	67.88	733.14
	6770 - Safety 1st Apex 65	HIII	0.068	80.43	862.28
	6773 - Britax Parkway	HIII	0.084	87.90	1195.59
	6774 - Britax Parkway	HIII	0.083	92.61	1192.59
	6771 - Britax Parkway	HIII	0.067	70.63	1043.39
	6778 - Cosco Ventura	HIII	0.078	66.20	829.90
	Average		**0.075**	**77.61**	**976.15**
Proposed Bench	8924 - Cosco Highrise Booster NB	HIII	0.052	40.55	289.92
	8927 - BubbleBum	HIII	0.049	41.66	194.87
	8926 - Harmony Youth NB	HIII	0.069	39.81	297.87
	8921 - Graco Nautilus BPB	HIII	0.067	48.36	374.16
	8922 - Graco TurboBooster	HIII	0.069	46.15	361.08
	8925 - Evenflo Amp HighBack	HIII	0.069	41.18	290.31
	8918 - Graco Nautilus	HIII	0.078	52.99	457.61
	8917 - Evenflo Titan Elite	HIII	0.103	54.87	570.40
	8920 - Recaro PerformanceRide	HIII	0.081	68.05	600.13
	8915 - Britax Marathon	HIII	0.078	64.27	668.36
	8910 - Evenflo Titan Elite	HIII	0.092	53.23	566.03
	8914 - Graco My Ride 65 (tethered)	HIII	0.075	50.41	398.55
	8916 - Chicco Nextfit (tethered)	HIII	0.074	54.82	389.71
	8929 - Graco Nautilus (tethered)	HIII	0.072	55.50	420.50
	8913 - AlphaOmegaElite (tethered)	HIII	0.072	55.66	441.55
	8923 - Evenflo Titan Elite (tethered)	HIII	0.077	60.53	581.27
	8912 - Evenflo Titan Elite (tethered)	HIII	0.080	56.82	518.18
	8919 - Britax Marathon (tethered)	HIII	0.078	56.85	503.83
	8928 - Recaro Performance Ride (tethered)	HIII	0.077	68.43	673.55
	8931 - Graco Nautilus (tethered)	HIII	0.077	47.11	349.81
	Average		**0.074**	**52.86**	**447.38**
FMVSS No. 213 (Compliance MGA)	Dorel Highrise Booster (H2) 213-MGA-12-034	H2	0.058	60.91	478.00
	Evenflo Amp High Back Booster (H2) 213-MGA-12-053	H2	0.078	50.72	424.00
	Graco Turbo Booster (H2) 213-MGA-12-064	H2	0.075	47.35	421.00
	Dorel Alpha Omega Elite (H2) 213-MGA-13-031	H2	0.074	52.72	331.00
	Dorel Highrise (H2) 213-MGA-13-039	H2	0.165	87.99	630.00
	Evenflo Titan (H2) 213-MGA-13-047	H2	0.093	48.65	359.00
	Evenflo Big Kid Sport Amp High Back (H2) 213-MGA-13-053	H2	0.057	49.50	402.00
	Graco MyRide 65 (H2) 213-MGA-13-061	H2	0.087	46.76	236.00
	Average		**0.086**	**55.57**	**410.13**

BILLING CODE 4910–59–C

In short, these data indicate that updating the standard seat assembly would eradicate the impediments found in the past to using the HIII–6YO dummy in compliance tests. When CRSs are tested on the proposed, more realistic standard seat assembly, the HIII–6YO's chin-to-chest contact is absent or significantly reduced in severity. The absence of contact or softer chin-to-chest contact results in lower

HIC scores compared to the HICs from tests of both the HIII–6YO and the H2–6YO on the current FMVSS No. 213 seat assembly. Thus, we believe we should terminate the optional use of the H2–6YO in compliance tests, as the primary reason NHTSA permitted continued use of the H2–6YO is no longer valid.

Another reason is to improve our overall assessment of CRS performance in the FMVSS No. 213 test. The HIII–6YO dummy is more biofidelic than the H2–6YO dummy.[107] The HIII–6YO has been shown to have good kinematics replicating that of a human in slow speed sled testing, exhibiting similar head and pelvis excursion as human children.[108] Testing CRSs on the updated (proposed) standard seat assembly in itself would yield dummy kinematics more representative of the kinematics of restrained children in real world frontal crashes than current tests, given the proposed seat assembly is specially designed to represent a current vehicle rear seat. However, having the HIII–6YO be a part of the test would amplify that realism.

Importantly, using the HIII–6YO could improve our assessment of CRS performance particularly in the significant safety area of head injury. NASS–CDS data from 1995–2009 show that 39 percent of AIS 2+ injuries to restrained children in frontal crashes are to the head and face, with 59 percent of these injuries due to contact with the seat and back support.[109] Mandatory use of the HIII–6YO in compliance testing could boost those efforts to address the head injury problem.

The HIII–6YO dummy yields a more accurate depiction of the restrained child's head excursion and would help better ensure CRSs are designed to prevent head impacts. Test data indicate the HIII–6YO exhibits more head excursion than the older H2–6YO dummy in FMVSS No. 213 tests. Table 21 shows paired sled test data of the HIII–6YO on the proposed seat assembly and the H2–6YO on the current FMVSS No. 213 seat assembly, with the dummies restrained in the same or equivalent booster seat model. Paired T-tests indicated that the measured differences in HIC and head excursion were significant (p-value <0.01).

BILLING CODE 4910–59–P

Table 21. Paired comparison of responses of the HIII-6YO on the proposed seat assembly and the H2-6YO on the current seat assembly (compliance test data), using the same booster seats.

Test Number	Seat Name	Dummy	HIC36		Chest Clip		Head Excursion		Knee Excursion	
				(+) Increase (-) Reduction	(g)	(+) Increase (-) Reduction	(mm)	(+) Increase (-) Reduction	(mm)	(+) Increase (-) Reduction
8924	Cosco Highrise Booster NB	HIII-6YO	289.92	-39.3%	42.77	3.3%	510	27.9%	561	20.2%
213-MGA-12-034	Dorel Highrise Booster 22297AOF	H2-6YO	478		41.4		399		467	
8924	Cosco Highrise Booster NB	HIII-6YO	289.92	-54.0%	42.77	-15.0%	510	35.8%	561	9.0%
213-MGA-13-039	Dorel Highrise 22297BHW	H2-6YO	630		50.3		376		515	
8925	Evenflo Amp High Back	HIII-6YO	290.31	-31.5%	45	-3.8%	574	32.3%	618	-6.1%
213-MGA-12-053	Evenflo Amp High Back 31911337	H2-6YO	424		46.8		434		658	
8922	Graco Turbo Booster	HIII-6YO	361.08	-14.2%	38.64	-8.7%	562	7.9%	584	-10.8%
213-MGA-12-064	Graco TurboBooster 1781042	HIII-6YO	421		42.3		521		655	
8926	Harmony Youth NB	HIII-6YO	297.87	-28.2%	43.29	-8.3%	551	26.1%	604	16.0%
213-MGA-12-069	Harmony LiteRider Youth Booster 0304003	HIII-6YO	415		47.2		437		521	
8927	Bubble Bum	HIII-6YO	194.87	-56.2%	48.81	10.7%	541	45.8%	598	10.6%
213-MGA-12-090	Bubble Bum Inflatable Booster	HIII-6YO	445		44.1		371		541	

BILLING CODE 4910–59–C

The average HIC, chest acceleration, and head and knee excursions are shown in Table 22.

[107] HIII–6YO also has extended instrumentation capability in many areas, such as in the neck and chest, which would be advantageous in the event a need should arise to measure the corresponding risk of injury to children in child restraints.

[108] Seacrist, T., et al., ''Kinematic Comparison of the Hybrid III and Q-Series Pediatric ATDs to Pediatric Volunteers in Low-Speed Frontal Crashes,'' 56th Annals of Advances in Automotive Medicine, October 2012.

[109] In a study of 28 cases of children ages 0 to 15 who sustained AIS 2+ head or face injuries in a frontal crash, researchers found that the front row seat back and the B-pillar were the most commonly contacted components. Arbogast, K.B., S. Wozniak, Locey, C.M., Maltese, M.R., and Zonfrillo, M.R. (2012). Head impact contact points for restrained child occupants. *Traffic Injury Prevention,* 13(2):172–81.

TABLE 22—AVERAGE HIC, CHEST ACCELERATION, HEAD EXCURSION, AND KNEE EXCURSION OF THE HIII–6YO ON THE PROPOSED SEAT ASSEMBLY AND THE H2–6YO ON THE CURRENT SEAT ASSEMBLY USING THE SAME BOOSTER SEAT MODEL

ATD	HIC	Chest acceleration	Head excursion	Knee excursion
HIII–6YO on proposed seat assembly	288	43 g	537 mm	584 mm
H2–6YO on current seat assembly	492	46 g	416 mm	533 mm

T-test showed that there was no significant difference (p-value<0.15) between the chest acceleration and knee excursion measures of the HIII–6YO in the proposed seat assembly and the H2–6YO on the current standard seat assembly when restrained in the same booster seat model.

NHTSA requests comments on whether using the HIII–6YO and the updated seat assembly would examine more closely the ability of CRSs to manage the kinematics of a restrained child in modern vehicles than a test with the H2–6YO.

NHTSA is also concerned that replacement parts for the ATD are becoming increasingly more difficult for the agency to procure. Although NHTSA's crash test dummies are designed to be durable and capable of withstanding crash testing without unreasonably breaking, all test dummies need refurbishment and parts replacement from time to time. As the H2–6YO is not a state-of-the-art dummy, it has become more difficult for NHTSA to obtain replacement parts for the ATD. The Agency is concerned that as parts become harder to obtain, NHTSA's inability to obtain parts will delay and impede its compliance test program. Ending the optional use of the H2–6YO dummy in compliance testing would avoid that potential problem.

NHTSA does not believe that terminating the optional use of the H2–6YO dummy would affect the manufacture of current child restraints significantly. First, while the head and knee excursions of the HIII–6YO dummy were greater than those of the H2–6YO, the excursion levels were well below FMVSS No. 213's excursion limits.[110]

Second, most CRS manufacturers are already using the HIII–6YO dummy to test some or all of their CRS models. Information from manufacturers to NHTSA in 2014 showed that 43 percent of CRS manufacturers use the HIII–6YO to test their CRSs, 21 percent use the H2–6YO and 36 percent use both dummies for testing their various CRS models. Manufacturers using both the H2–6YO and HIII–6YO dummies test at least 50 percent of their models using the HIII–6YO dummy.

For the above reasons, NHTSA is proposing to specify in FMVSS No. 213 that the agency will only use the HIII–6YO and not the H2–6YO dummy, with provision of sufficient lead time (*e.g.,* 3 years after publication of a final rule) for the change. Comments are requested on the issues discussed above.

e. Positioning the Legs of the HIII–3YO Dummy in Rear-Facing CRSs

Because CRSs labeled for use by children in the 10 kg–18.2 kg (22–40 lb) weight range are often sold to be used rear-facing, we seek to make more evaluative our compliance testing of these CRSs when so used.

Under current FMVSS No. 213, rear-facing CRSs labeled for use by children in the 10 kg–18.2 kg (22–40 lb) weight range are subject to testing with the (33 lb) HIII–3YO test dummy. In the past, testing with the 3YO dummy rear-facing has been complicated by the dummy's legs oftentimes getting crammed against the seat back[111] and the Agency not knowing how it ought to position the ATD's legs in the compliance test. In this NPRM, we propose a dummy leg positioning procedure that calls for placing the ATD's legs up against the seat back and removing the test dummy's knee joint stops to allow the leg to extend at the knee in the dynamic test. The procedure is already used by some commercial test labs and CRS manufacturers to test rear-facing CRSs for older children.

The positioning procedure is based on data analyzing toddler lower extremity postures when seated in rear-facing CRSs. NHTSA initiated a research project conducted by the University of Michigan Transportation Research Institute (UMTRI) to identify toddlers' common lower extremity postures.[112] UMTRI evaluated 29 subjects ages 18- to 36-months in two rear-facing conditions (wide and narrow seat).[113] UMTRI took anthropometry measures, surface scans and coordinate measures to evaluate the toddler seating postures.

UMTRI found that the most common seating postures for toddlers in rear-facing restraints are with the child's legs bent and ''relaxed'' with the bottom part of the feet up against the seat back, and with the child's legs spread and ''feet flat against each other.'' These seating positions are not achievable by the HIII–3YO dummy due to the dummy's limited hip range of motion. However, the children also frequently sat with their legs bent and elevated against the vehicle seat back. The HIII–3YO's legs are able to achieve this bent and elevated position.

We have tentatively decided to position the HIII–3YO's legs bent and elevated in rear-facing seats as shown by many of the children in the UMTRI study. Positioning the ATD's legs this way would replicate a typical position many children take in a rear-facing CRS. As noted above, the proposed procedure is already used by some commercial test labs and CRS manufacturers to test rear-facing CRSs for older children.

As part of the study, UMTRI conducted sled tests to compare the proposed positioning protocol to those used by Transport Canada in Canadian Motor Vehicle Safety Standard (CMVSS) No. 213 and by various commercial test labs and CRS manufacturers, to assess differences, if any, in CRS performance and the ease-of-use of the procedures.[114] UMTRI evaluated the following protocols: (a) Positioning the ATD in an unaltered state (baseline);[115] (b) removing knee joint stops to allow the leg to extend at the knee (NHTSA's proposed procedure); (c) removing lower leg completely (used by CMVSS

[110] Since not every CRS on the market was tested, there may be some that may need some design changes to meet the head excursion limit when tested with the HIII–6YO on the proposed seat assembly. However, the design changes would be warranted for child safety, as using the HIII–6YO better replicates the kinematics of an actual child than the H2–6YO.

[111] Positioning the HIII- 3YO dummy in a rear-facing CRSs has proven difficult in laboratory tests because of the bracing interaction between the legs of the dummy and the seat which can change the pre-test set recline angle of the rear-facing CRS and the pre-test applied lap belt tension.

[112] ''Toddler Lower Extremity Posture in Child Restraint Systems,'' March 2015, UMTRI–2014–8.

[113] UMTRI also identified the children's common lower extremity postures in forward-facing seats (long and short cushion). *Id.*

[114] ''Assessment of ATD Selection and Use for Dynamic Testing of Rear Facing Restraint Systems Designed for Larger Toddlers.'' UMTRI–2014–12. March 2015.

[115] Experienced bracing between the seat and CRS because of the legs.

No. 213); (d) removing lower leg and attaching the shank mass to the sides or top of thigh (used by CMVSS No. 213); and (e) bending the leg at the knee. The sled tests were conducted using three convertible child restraints (Graco Comfort Sport, Cosco Scenera and Cosco Scenera 40RF).

Test results in Table 23 show that the different seating procedures had little effect on the response data (HIC, chest acceleration, seat back rotation) obtained from tests of the three restraints.[116] Table 23 shows that the coefficient of variation of the different dummy configurations in three different CRSs was less than 10 percent except for one that showed an 11 percent CV for HIC.

TABLE 23—HIII–3YO RESPONSES IN SLED TESTS WITH DIFFERENT SEATING CONFIGURATIONS

UMTRI test number (NT12##)	CRS	Dummy configuration	Max seat back angle (degrees)	HIC	Chest acceleration 3 ms clip (g)
53	Cosco Scenera	A–Baseline	57	342	39
54	Cosco Scenera	B–Kneestop	59	293	38
55	Cosco Scenera	D–Shank	56	296	39
52	Cosco Scenera	E–Bent Knee	57	334	37
Average			57.3	316.3	38.3
Standard Deviation			1.3	25.4	1.0
CV			2%	8%	3%
50	Cosco Scenera 40	A–Baseline	55	383	38
49	Cosco Scenera 40	B–Kneestop	55	359	40
48	Cosco Scenera 40	D–Shank	54	361	40
51	Cosco Scenera 40	E–Bent	55	337	37
Average			54.8	360.0	38.8
STD			0.5	18.8	1.5
CV			1%	5%	4%
41	Graco Comfort Sport	A–Baseline	54	358	41
42	Graco Comfort Sport	B–Kneestop	54	350	45
45	Graco Comfort Sport	C—No leg	51	364	41
46	Graco Comfort Sport	D–Shank	51	436	35
44	Graco Comfort Sport	E–Bent	55	334	40
Average			53	368.4	40.4
STD			1.9	39.4	3.6
CV			4%	11%	9%

UMTRI also found that sled testing went more smoothly with some of the procedures than with others. An unaltered HIII–3YO dummy installation (baseline) created the most interaction (bracing) between the dummy's legs and the standard seat assembly. Removing the HIII–3YO knee joint and bending the legs at the knee (proposed procedure) were found to be easy to do in the lab and added little time to the testing process. Removing the HIII–3YO lower legs and attaching them to the upper leg was not a simple task; the reattached segments were not sufficiently coupled using tape and it added bulk to the thigh area of the dummy. We are also concerned that the added bulk of the reattached segments can create fit issues in narrow CRSs.[117]

In summary, more and more CRSs are sold for use rear-facing with older children. The proposed positioning procedure would facilitate NHTSA's compliance testing of the CRSs to the requirements of FMVSS No. 213. The procedure involves removing the dummy's knee joint stops to allow the leg to bend freely at the knee. Removing the knee joint stops results in a seating posture that toddlers adopt in real life, minimizes the possibility of bracing between the CRS and the standard seat assembly, is a task easily accomplished in the test lab and minimizes changes to the HIII–3YO dummy.[118]

f. Table Summarizing Proposed Amendments

Table 24 below illustrates this NPRM's proposed weight categories discussed above.

[116] ''Assessment of ATD Selection and Use for Dynamic Testing of Rear Facing Restraint Systems Designed for Larger Toddlers,'' *supra.*

[117] UMTRI also tested a CRABI–18MO by adding mass to the torso and thigh of the dummy to achieve a 33–35 lb weight. UMTRI found that while adding mass to the CRABI–18MO dummy was not difficult, the flexible weights have to be attached around the torso of the dummy which changes the shape of the dummy and may affect the ATD's biofidelity. In addition, the CRABI–18MO is not incorporated into 49 CFR part 572. Therefore, the CRABI–18MO was not further considered.

[118] NHTSA and UMTRI explored making changes to the HIII–3YO dummy to allow it to achieve the ''relaxed'' and ''feet flat against each other'' postures shown by toddlers in the study. Efforts involved reshaping the dummy's thigh flesh and changing the thigh joint to a ball-and-socket joint to improve the range of motion of the dummy's hips. However, prototypes showed that making those changes yielded little improvement in the seating posture and that a more involved effort would be needed to attain the postures. Since the test data indicated that different seating procedures had little effect on the response data, we decided there was not a sufficient need to pursue modifying the HIII–3YO dummy. ''Toddler Lower Extremity Posture in Child Restraint Systems,'' *supra.*

TABLE 24—PROPOSED USE OF DUMMIES BASED ON MANUFACTURER'S WEIGHT AND HEIGHT RECOMMENDATIONS

CRS recommended for use by children of these weights and heights—	Are compliance tested by NHTSA with these ATDs (subparts refer to 49 CFR part 572)
Weight (W) ≤5 kg (11 lb), Height (H) ≤650 mm (25.5 inches)	Newborn (subpart K).
Weight 5 kg (11 lb) <W ≤10 kg (22 lb), Height 650 mm (25.5 inches) <H ≤750 mm (29.5 inches).	Newborn (subpart K), CRABI–12MO (subpart R).
Weight 10 kg (22 lb) <W ≤13.6 kg (30 lb), Height 750 mm (29.5 inches) <H ≤870 mm (34.3 inches).	CRABI–12MO (subpart R).
Weight 13.6 kg (30 lb) <W ≤18.2 kg (40 lb), Height 870 mm (34.3 inches) <H ≤1100 mm (43.3 inches).	HIII–3YO (subpart P).
Weight 18.2 kg (40 lb) <W ≤22.7 kg (50 lb), Height 1100 mm (43.3 inches) <H ≤1250 mm (49.2 inches).	HIII–6YO (subpart N).
Weight 22.7 kg (50 lb) <W ≤29.5 kg (65 lb), Height 1100 mm (43.3 inches) <H ≤1250 mm (49.2 inches).	HIII–6YO (subpart N) and weighted HIII–6YO (subpart S).
Weight greater than 29.5 kg (65 lb), Height greater than 1250 mm (49.2 inches).	HIII–10YO (subpart T*).

*HIC is not a pass/fail criterion when testing with the HIII–10YO dummy.
(**Note:** CRSs with internal harnesses exceeding 29.5 kg (65 lb) with an ATD are not tested with that ATD on the child restraint anchorage system of the standard seat assembly.)

g. Consistency With NHTSA's Use of ATDs in the Proposed Side Impact Test

NHTSA requests comment on the merits of adopting the above proposed dummy selection categories in the January 28, 2014 proposed side impact test for CRSs, regarding CRSs for children weighing up to 18.2 kg (40 lb). The January 28, 2014 NPRM referred to the weight categories currently in FMVSS No. 213 to determine which ATD NHTSA would use in a side impact compliance test. That is, NHTSA proposed to use the CRABI–12MO dummy to test CRSs designed for children weighing up to 10 kg (22 lb), and to use a newly-developed side impact ATD (called the ''Q3s'') to test CRSs for children weighing 10 to 18.2 kg (22–40 lb). To align the side impact test with this frontal impact test proposal, NHTSA is considering using the CRABI–12MO to test CRSs designed for children weighing up to 13.6 kg (30 lb), and using the Q3s (3YO dummy) to test CRSs designed for children weighing 13.6 to 18.2 kg (30–40 lb) in the side impact test. The Agency's reasons for considering this change are the same ones discussed above in this NPRM relating to fitting the ATDs in the CRSs and how representative the ATDs are of the children who would be using the CRS. Further, NHTSA believes it would make sense for CRSs to be tested with the same ATDs in both the frontal impact and side impact tests.

X. School Bus CRSs

FMVSS No. 213 permits a type of CRS that is designed for exclusive use on school buses. The CRS type is a ''harness,'' which the standard defines in S4 as ''a combination pelvic and upper torso child restraint system that consists primarily of flexible material, such as straps, webbing or similar material, and that does not include a rigid seating structure for the child.'' NHTSA amended FMVSS No. 213 to accommodate harnesses manufactured for use on school bus seats because many school districts and school bus operators needed a product with a seat back mount to transport preschoolers, children who need help sitting upright, and children who need to be physically restrained because of physical or behavioral needs.[119] The seat back mount of the specialized harnesses manufactured for use on school bus seats does not use a seat belt to attach to the seat and thus can be used on large school buses without seat belts, which most large school buses do not have.

NHTSA has become aware of a CRS that is also designed exclusively for school bus use. The CRS uses a seat back mount to attach to the school bus seat without the use of a seat belt. However, because the CRS is not a harness, it does not qualify as a school bus harness under the wording of the standard and is not permitted under FMVSS No. 213.[120]

NHTSA proposes amendments to FMVSS No. 213 to make the standard more design-neutral regarding CRSs that are designed for exclusive use on school bus seats. To permit restraints for exclusive school bus use other than harnesses, the proposed amendments would include a new design-neutral definition for this type of CRS.

NHTSA proposes to amend FMVSS No. 213 so that CRSs manufactured for exclusive use on school bus seats could be certified using a seat back mount or a seat back and seat pan mount attachment method. Specifically, NHTSA proposes to add a definition of ''school bus child restraint system'' in S4 of FMVSS No. 213 that would define the term as a child restraint system (including harnesses), sold for exclusive use on school bus seats, that has a label conforming with S5.3.1(b) of FMVSS No. 213.

NHTSA proposes amending S5.3.1(b) to require school bus CRSs to bear a permanent warning label, depicted in Figure 12 of FMVSS No. 213, that is permanently affixed to the part of the harness or strap that attaches the CRS to a vehicle seat back. This label must be plainly visible when installed and easily readable, the message area must be white with black text and no less than 20 square centimeters, and the pictogram shall be gray and black with a red circle and slash on a white background and no less than 20 mm in diameter.

NHTSA proposes to amend table S5.1.3.1(a) which specifies the head and knee excursion requirements. School bus CRSs would be subject to the current excursion limit requirements for harnesses manufactured for use on school bus seats when installed using a seat back mount or seat back and seat pan mounts. Also, NHTSA proposes to amend the table to S5.3.2 to indicate that school bus CRSs must meet the relevant requirements of the standard when attached with a seat back mount or seat back and seat pan mounts.

This NPRM also proposes to amend S5.6.1.11 of FMVSS No. 213 to require that printed instructions accompanying these school bus CRSs include the warning statement: ''WARNING! This restraint must only be used on school bus seats. Entire seat directly behind must be unoccupied or have restrained occupants.''

[119] 69 FR 10928, March 9, 2004.

[120] NHTSA letter to IMMI, September 21, 2016 *https://isearch.nhtsa.gov/files/14-001678%20IMMI%20STAR%20crs.htm.*

School bus CRSs would not be required to have lower attachments to install the CRS using the child restraint anchorage system, nor would they be required to meet performance requirements when tested using seat belt and lower anchorages attachment methods. School bus CRSs would not need to have alternative methods of attachments other than the seat back mount or seat back and seat pan mounts because school bus seats do not always have seat belts and/or lower anchorages.

XI. Child Passenger Safety Issues Arising From Research Findings

NHTSA requests comment on several developments in child passenger safety that have arisen in the research context. The Agency would like commenters' views on how best to approach those developments. The Agency has docketed a paper that discusses these issues in more detail.

1. NHTSA has reviewed research reports on testing done on certain kinds of child restraints—CRSs not yet widely available in the U.S—that raise concerns about a potential unreasonable risk of submarining [121] or ejection from these devices in some crash scenarios. The CRSs in question are inflatable booster seats, and ''shield-type'' child restraints (shield-only-CRSs) available in markets overseas. Comments are requested on the findings of the reports.[122]

(a) *Inflatable booster seats:* Transport Canada conducted 25–30 mph frontal impact crash tests of different vehicle models, with the HIII–6YO and HIII–10YO dummies restrained in inflatable boosters in rear seats. In the tests, the dummies experienced significant submarining due to excessive compression of the inflatable booster during the crash event. Booster seats sold in Canada are required to compress by not more than 25 mm when subjected to a 2,250 N quasi-static compression force. Inflatable booster seats cannot meet the requirements of this quasi-static compression test and so inflatable boosters are not sold in Canada. Comments are requested on the findings of the research crash tests conducted in Canada, on the booster seat compression test requirements in Canada, and on the safety need to have a compression test in FMVSS No. 213.

(b) *Shield-only-CRSs:* Shield-only-CRSs only have a shield to restrain a young child's upper torso, lower torso, and crotch. While such CRSs are currently not available in the U.S., there are a wide variety of shield-only-CRSs in Europe intended for children weighing less than 13.6 kg (30 lb). Child dummies (representing children aged 18-months old and 3-years-old) restrained in shield-only-CRSs in simulated vehicle rollover tests, 64 km/h (40 mph) offset frontal impact vehicle crash tests, and in 64 km/h (40 mph) Allgemeiner Deutsher Automobil-Club (ADAC) type frontal impact sled tests were completely or partially ejected from the CRSs. These test results raise concern about the ability of a shield-only-CRS to retain small children in the CRS in certain crashes or in a rollover. NHTSA seeks comment on the findings of these research tests. Should FMVSS No. 213 require shield-only-CRSs to have additional shoulder belts and a crotch strap, similar to the requirements for child restraints that have belts designed to restrain the child (S5.4.3.3)?

2. NHTSA requests information on a matter showing up in the field concerning children under 1YO outgrowing infant carriers by height much earlier than by weight. Research studies conducted at UMTRI [123] show that some infant carriers marketed as suitable for children up to 13.6 kg (30 lb), which is greater than the weight of a 95th percentile 1 YO and an average 1.5 YO, cannot ''fit'' the height of a 95th percentile 1 YO or an average 1.5 YO.[124] NHTSA believes that infant carriers' height and weight recommendations should better match the children for whom the CRS is recommended. NHTSA seeks comment on UMTRI's research findings regarding how current infant carriers fit children that they are designed for. Should infant carriers' height and weight recommendations better match up to better accommodate the children for whom the CRS is recommended?

3. NHTSA has supported the development of computer models of children of different weights and heights to assist CRS manufacturers in designing child restraints that better fit the children for whom the CRS is recommended.[125] These virtual models are available to the public to improve the fit of CRSs to children.[126] NHTSA requests comments from manufacturers and other parties on whether they used the models and whether the models were helpful.

XII. Proposed Lead Time

This NPRM proposes that the compliance date for most of the amendments in this rulemaking action would be three years following the date of publication of the final rule in the **Federal Register**, with optional early compliance permitted (exceptions are discussed below). NHTSA tentatively believes that a 3-year period is in the public interest because CRS manufacturers would need to gain familiarity with the new standard seat assembly and new test protocols, and would need time to assess their products' conformance to the new FMVSS No. 213 test requirements. They would need time to implement design and production changes as needed. A 3-year lead time also aligns with the typical design cycle of child restraints.

Exceptions to the proposed 3-year compliance date would be as follows. NHTSA proposes a 180-day compliance date for the proposed changes to registration card requirements and the proposed changes to permit school bus child restraint systems (early optional compliance would be permitted). A 1-year compliance date is proposed for labeling requirement changes (early optional compliance would be permitted). NHTSA would like to implement these changes as early as possible to attain the safety benefits they can achieve. The proposed time should provide enough time to change the card and labels. The proposed 180-day compliance date would be sufficient for school bus CRSs since the proposed amendment would remove a restriction on the manufacture of such products.

XIII. Corrections and Other Minor Amendments

This NPRM proposes a few housekeeping and other amendments to the text of FMVSS No. 213.

a. Correct Reference

The Agency would amend S5.5.2(l)(3)(i) of FMVSS No. 213 by correcting a reference to ''S5.5.2(l)(3)(A)(i), (ii), or (iii).'' The reference would be corrected to refer to ''S5.5.2(l)(3)(i)(A), (B), or (C).''

[121] ''Submarining'' refers to the tendency for a restrained occupant to slide forward feet first under the lap belt during a vehicle crash, which could result in serious abdominal, pelvic, and spinal injuries.

[122] Reports documenting vehicle crash tests using inflatable and shield-type CRSs are available in the docket for this NPRM.

[123] Manary. M., et al., ''Comparing the CRABI–12 and CRABI–18 for Infant Child Restraint System Evaluation.'' June 2015. DOT HS 812 156. The report is available in the docket for this NPRM.

[124] Field experience indicates that children at the higher end of growth charts typically outgrow the carriers by height at around 9–10 months.

[125] NHTSA has sponsored an UMTRI project developing toddler virtual dummies for use in improving of the fit of CRSs to child passengers. Information on a 2015 UMTRI workshop describing development of the toddler virtual fit dummies can be found at: *http://umtri.umich.edu/our-results/projects/umtri-workshop-new-tools-child-occupant-protection.*

[126] Toddler virtual models available for download at: *http://childshape.org/toddler/manikins/.*

b. Section 5.1.2.2

The Agency is removing and reserving S5.1.2.2 because it applies to CRSs manufactured before August 1, 2005 and so is no longer applicable.

c. Table to S5.1.3.1(a) and Test Configuration II

The Agency is correcting the table to S5.1.3.1(a), which specifies performance criteria and test conditions for FMVSS No. 213's occupant excursion requirements for add-on forward-facing CRSs. When NHTSA created the table the agency inadvertently did not include a reference to Test Configuration II of FMVSS No. 213.[127] NHTSA seeks to correct this oversight.

Test Configuration II is a 32 km/h (20 mph) ''misuse'' test that applies to CRSs that are ''equipped with a fixed or movable surface described in S5.2.2.2.'' [128] (S6.1.2(a)(2).) [129] In Test Configuration II, NHTSA tests those types of CRSs without attaching ''any of the child restraint belts unless they are an integral part of the fixed or movable surface.'' [130] In addition, the child restraint is untethered (S6.1.2(a)(2)(i)). The tested child restraint must meet all the dynamic performance requirements of the standard, not just excursion requirements, when tested in this manner.[131] Test Configuration II is intended to address the possibility that the restraint's internal belt system will be misused or not used at all by the caregiver. If this happens, Test Configuration II ensures that the restraint will offer some minimal protection even when the CRS is not properly used.

d. Updating Reference to SAE Recommended Practice J211/1

Current specifications of the test device for built-in child restraints in FMVSS No. 213 (S6.1.1(a)(2)(i)(B) and S6.1.1(a)(2)(ii)(G)) require that instrumentation and data processing be in conformance with SAE Recommended Practice J211 (June 1980), ''Instrumentation for Impact Tests.'' SAE Recommended Practice J211 has been revised several times since June 1980 and most test facilities are currently using newer versions of the document. FMVSS No. 208, ''Occupant crash protection,'' currently refers to the document as SAE Recommended Practice J211/1 (March 1995). The 1995 version of SAE J211/1 is consistent with the current requirements for instrumentation and data processing in FMVSS No. 213. Using the same Recommended Practice J211/1 (1995) in S6.1.1(a)(2)(i)(B) and S6.1.1(a)(2)(ii)(G) would update the FMVSS No. 213 provisions and facilitate the processing of test results when combining a test of built-in child restraints with an FMVSS No. 208 test. Therefore, NHTSA proposes updating the reference to SAE Recommended Practice J211(1980) in sections S6.1.1(a)(2)(i)(B) and S6.1.1(a)(2)(ii)(G) to SAE Recommended Practice J211/1 (1995).[132]

XIV. Regulatory Notices and Analyses

Executive Order (E.O.) 12866, E.O. 13563, and DOT Rulemaking Procedures

The Agency has considered the impact of this rulemaking action under E.O. 12866, E.O. 13563, and the Department of Transportation's administrative rulemaking procedures set forth in 49 CFR part 5, subpart B. This rulemaking is not considered significant and was not reviewed by the Office of Management and Budget under E.O. 12866, ''Regulatory Planning and Review.''

Estimated Benefits and Costs

The NPRM proposes to amend FMVSS No. 213 by (a) updating the standard seat assembly to represent better the rear seating environment in the current vehicle fleet, (b) amending several labeling and owner information requirements to improve communication with today's CRS owners and to align with current best practices for child passenger safety, and (c) amending how NHTSA uses ATDs to make the Agency's compliance tests more evaluative of CRS performance. The proposal would provide some safety benefits with, at most, minimal incremental costs.

Updated Sled Assembly

The proposed updates to the sled test would better align the performance of CRSs in compliance tests to that in real world crashes.

NHTSA tested 24 CRS models representing the market of infant carrier, convertible, all-in-one, and booster type CRSs on the proposed standard seat assembly with the appropriate size dummies. All but one forward-facing CRS models met the current and proposed performance requirements. The Diono Radian tested with the HIII–10YO dummy met all performance requirements except for the head excursion limit in the untethered condition. Based on these data, the Agency believes that only a few CRSs may need minor redesign to meet the requirements in the proposed standard seat assembly (V2).[133]

NHTSA believes that a lead time of three years is sufficient for the redesign. The Agency has not estimated a cost of this redesign, assuming the redesign could be incorporated into a typical business model involving manufacturers refining child restraint designs to freshen their product lines. The refinements result in new product offerings that appeal to consumers and help manufacturers remain competitive.

There would be costs involved in changing the standard seat assembly used by NHTSA to assess CRS compliance. Manufacturers are not required to use the standard seat assembly, but as a practical matter they usually choose to do so, to test their CRSs as similarly to the tests conducted by NHTSA. The one-time cost of the updated standard seat assembly sled

[127] NHTSA adopted the table into FMVSS No. 213 in a March 5, 1999 final rule establishing the requirements for child restraint anchorage systems for vehicles and corresponding requirements for CRSs (64 FR 10786).

[128] S5.2.2.2 states that each forward-facing child restraint system shall have no fixed or movable surface: (a) directly forward of the dummy and intersected by a horizontal line, parallel to the seat orientation reference line (term defined in S4 of FMVSS No. 213), in the case of the add-on child restraint system, or parallel to a vertical plane through the longitudinal center line of the vehicle seat, in the case of a built-in child restraint system, and (b) passing through any portion of the dummy, except for surfaces which restrain the dummy when the system is tested in accordance with S6.1.2(a)(2), so that the child restraint system shall conform to the requirements of S5.1.2 and S5.1.3.1.

[129] S6.1.2(a)(2)(i) and (ii) also state that Test Configuration II applies to ''backless child restraint system[s] with a top anchorage strap'' and to a ''built-in booster seat with a top anchorage strap.'' NHTSA is proposing to remove references in FMVSS No. 213 to those CRSs because such restraints are no longer or have never been produced.

[130] See FMVSS No. 213 S10.2.1(b)(2) and S10.2.2(c)(2).

[131] The CRSs must also meet the requirements of FMVSS No. 213 when tested to Test Configuration I's 48 km/h (30 mph) tests. The CRSs' internal belts are attached in Test Configuration I but the top tether cannot be attached to meet FMVSS No. 213's head excursion limit of 813 mm (32 inches) and the other dynamic performance requirements in S5.1 of the standard.

[132] NHTSA would also reference the updated SAE J211/1 in the compliance test procedure proposed for FMVSS No. 213a's side impact test. See 79 FR at 4603, S6.1.2(f).

[133] Preliminary tests with the proposed standard seat assembly using an average 23.3 g peak acceleration pulse and an average 47.5 km/h (29.5 mph) velocity within the FMVSS No. 213 acceleration corridor showed dummy HIC and chest accelerations in some booster seats, tested with the HIII–6YO and HIII–10YO dummies, near or exceeding allowable threshold levels. While NHTSA expects that some booster seats may need to be redesigned to meet the performance measures when tested with a higher acceleration pulse, these redesigns could be accomplished without additional material cost. For example, different foams could be used in the CRS seating cushions that work better with the proposed stiffer standard seat cushion foam to lower the HIC and chest g values.

buck is about $8,000. If a manufacturer chooses to build the assembly itself or uses one at an independent test facility, either way there would be minimal cost impacts when the cost of the assembly and testing CRSs is distributed among the hundreds of thousands of CRSs that would be sold by each manufacturer.

Labeling and Owner Registration

The Agency believes that the proposed updates to the labeling requirements would benefit safety by reducing the premature graduation of children from rear-facing CRSs to forward-facing CRSs, and from forward-facing CRSs to booster seats. The Agency estimates 1.9 to 6.3 lives would be saved and 2.6 to 8.7 moderate-to-critical severity injuries would be prevented annually by aligning FMVSS No. 213's use instructions with current best practices on transporting children.[134]

The proposed changes to the labeling requirements would have minimal or no cost impacts, as mostly they are deregulatory. Manufacturers would be given the flexibility to provide required information in statements or a combination of statements and pictograms at locations that they deem most effective. Manufacturers may provide the recommended child weight and height ranges for the use of CRSs in a specific installation mode on existing voluntary labels by simply changing the minimum child weight limit values. Since no additional information would be required on the labels by this NPRM, the size of the label would not need to be increased. Thus, there would be minimal or no additional cost for the label. There would also be no decrease in sales of forward-facing car safety seats or of booster seats as a result of the proposal to raise the minimum child weight limit values for forward-facing CRSs and booster seats. Most forward-facing CRSs cover a wide child weight range, so the labeling changes would only affect how consumers use the products and not the sale of them. For example, consumers would still purchase forward-facing car safety seats but would wait to use them forward-facing until the child is at least 1. They would still purchase convertible CRSs, but will delay turning the child forward-facing until the child is at least 1. Consumers would still purchase booster seats, but would use them only from when the child reaches 18.2 kg (40 lb).

The proposed changes to the registration program generally lessen restrictions and are optional for manufacturers to implement. These proposed changes to the registration card would provide flexibility to manufacturers in how they communicate with consumers and would likely help improve registration rates and recall completion rates. NHTSA cannot quantify the benefits at this time.

NHTSA estimates there would be no costs associated with the proposed changes. While the changes could affect the collection of information pursuant to the Paperwork Reduction Act (which is discussed later in this section), there would be no additional material cost associated with the proposed changes to the registration card or to the CRS label or owner manual pertaining to registration. Manufacturers could use the same card and labels and just change the wording on them.

ATDs

The proposed updates of how ATDs are used in the sled test for assessing CRS performance better accords with current CRS designs and best practices for transporting child passengers compared to the current specifications in FMVSS No. 213. NHTSA cannot quantify the possible safety benefits at this time.

Some of the proposed changes lessen testing burdens by reducing the extent of testing with ATDs. For example, the NPRM proposes that CRSs for children weighing 10 kg to 13.6 kg (22 to 30 lb) would no longer be subject to testing with the HIII–3YO dummy. NHTSA estimates a reduction in testing cost of $540,000 for the current number of infant carrier models in the market.[135] Also, CRSs for children weighing 13.6–18.2 kg (30–40 lb) would no longer be tested with the CRABI–12MO. However, the Agency does not expect any reduction in testing costs from this latter modification since all CRSs with internal harnesses are sold for children weighing less than 13.6 kg (30 lb), and so would still be subject to testing with the CRABI–12MO in that regard. The proposed positioning procedure for the legs of the HIII–3YO dummy in rear-facing CRSs is unlikely to have cost implications because the procedure is the same as that currently used by manufacturers.

Similarly, NHTSA believes that testing CRSs solely with the HIII–6YO rather than the H2–6YO dummy would not have significant cost implications. This is because there would be little or no design changes needed for the CRSs due to this proposed update since nearly all the CRSs tested with the HIII–6YO in the proposed standard seat assembly complied with all the FMVSS No. 213 requirements.[136] NHTSA's testing also showed that CRSs that currently comply with FMVSS No. 213 using the H2–6YO dummy also met all the performance requirements in the standard when tested using the HIII–6YO dummy in the proposed standard seat assembly. In addition, manufacturers are increasingly certifying at least some of their CRS models for older children using the HIII–6YO dummy rather than the H2–6YO and so most manufacturers already have access to the HIII–6YO dummy and would not need to purchase the dummy as a result of this proposed update. Most CRS manufacturers hire commercial test labs to test their CRSs for conformance with FMVSS No. 213 requirements. These labs already have the HIII–6YO dummy since some of their CRS manufacturer clients currently want to certify their CRSs based on tests with the HIII–6YO dummy. Thus, there would not be a cost increase to purchase and test with the dummy.

NHTSA believes that a lead time of three years is sufficient for redesigning CRSs that may need modifications to comply with the proposed updates to ATD selection for the sled test because most CRSs would need minor or no modifications as a result of the proposed updates. Further, a 3-year time frame aligns with the typical design cycle for CRSs. The Agency notes also that manufacturers have the option of not changing CRS designs in some instances, and may instead change the weight of the children for whom the CRS is recommended. Narrowing the population of children for whom the CRS is recommended could result in reducing the number of ATDs NHTSA and manufacturers use in compliance and certification tests, respectively.

School Bus Child Restraint Systems

The proposed changes to include in FMVSS No. 213 a new type of CRS

[134] Details of the benefits analysis are provided in the Appendix to this NPRM.

[135] There are currently 45 infant carrier models with recommended upper weight limit exceeding 10 kg (22 lb). Each rear-facing CRS is tested in three different configurations on the standard seat assembly with each dummy used for testing the CRS: (1) CRS installed using seat belts, (2) CRS installed using the lower anchors and no tether, and (3) CRS installed without the base using the lower anchors and no tether. The cost of a sled test is estimated at $4,000. Therefore, the cost savings by not testing the 45 infant carrier models using the HIII–3YO dummy is estimated to be $540,000 (= $4,000 × 3 × 45). Since manufacturers typically conduct more than one test in each of the CRS installation configurations, NHTSA expects the actual cost savings to be greater than the estimated $540,000.

[136] Of 21 tests with the HIII–6YO in the proposed seat assembly, all passed the performance metrics, except for one that failed head excursion limits.

manufactured for exclusive use on school bus seats would allow the sale of these products. The Agency estimates there would be no cost impacts associated with the proposed changes because the amendment would permit more products to be sold for school bus use. The benefits of the proposed changes are associated with the popularity of such CRSs in the pupil transportation industry for transporting preschool and special-needs children. However, NHTSA cannot quantify these benefits at this time.

Executive Order 13771

Executive Order 13771 titled ''Reducing Regulation and Controlling Regulatory Costs,'' directs that, unless prohibited by law, whenever an executive department or agency publicly proposes for notice and comment or otherwise promulgates a new regulation, it shall identify at least two existing regulations to be repealed. In addition, any new incremental costs associated with new regulations shall, to the extent permitted by law, be offset by the elimination of existing costs. Only those rules deemed significant under section 3(f) of Executive Order 12866, ''Regulatory Planning and Review,'' are subject to these requirements. As discussed above, this rule is not a significant rule under Executive Order 12866 and, accordingly, is not subject to the offset requirements of 13771.

This proposed rule is expected to be an E.O. 13771 deregulatory action because NHTSA believes it would reduce the cost of complying with NHTSA's requirements. The proposed rule would amend FMVSS No. 213 to update the standard seat assembly and reduce costs by eliminating unnecessary or outdated requirements, such as unnecessary testing of infant carriers with the 3YO dummy. The proposal to eliminate unnecessary testing with the 3YO test dummy would result in a reduction in testing costs of $540,000 for the current number of infant carrier models in the market. Removing the restrictions in the owner registration program will enable manufacturers to interact with consumers using modern methods of communication, which should encourage design innovation and productivity. Proposals to update labels and owners' manuals would not increase costs, as manufacturers would be replacing current labels and manuals with updated versions. NHTSA estimates that virtually all CRSs made in the U.S. would meet FMVSS No. 213's performance requirements on the proposed seat assembly.

Regulatory Flexibility Act

Pursuant to the Regulatory Flexibility Act (5 U.S.C. 601 *et seq.,* as amended by the Small Business Regulatory Enforcement Fairness Act (SBREFA) of 1996), whenever an agency is required to publish a notice of proposed rulemaking or final rule, it must prepare and make available for public comment a regulatory flexibility analysis that describes the effect of the rule on small entities (*i.e.,* small businesses, small organizations, and small governmental jurisdictions), unless the head of an agency certifies the rule will not have a significant economic impact on a substantial number of small entities. Agencies must also provide a statement of the factual basis for this certification.

I certify that this proposed rule would not have a significant economic impact on a substantial number of small entities. NHTSA estimates there to be 29 manufacturers of child restraints, none of which are small businesses. Even if there were a small CRS manufacturer, the impacts of this proposed rule would not be significant. NHTSA believes that virtually all CRSs would meet FMVSS No. 213's requirements on the new seat assembly without modification. Manufacturers may need to change the labels on their child restraints pursuant to the proposed requirements, but the changes are minor and would entail switching out values on current labels.

National Environmental Policy Act

NHTSA has analyzed this proposed rule for the purposes of the National Environmental Policy Act and determined that it would not have any significant impact on the quality of the human environment.

Executive Order 13132 (Federalism)

NHTSA has examined this proposed rule pursuant to Executive Order 13132 (64 FR 43255, August 10, 1999) and concluded that no additional consultation with States, local governments or their representatives is mandated beyond the rulemaking process. The Agency has concluded that the rulemaking would not have sufficient federalism implications to warrant consultation with State and local officials or the preparation of a federalism summary impact statement. The proposed rule would not have ''substantial direct effects on the States, on the relationship between the national government and the States, or on the distribution of power and responsibilities among the various levels of government.''

NHTSA rules can preempt in two ways. First, the National Traffic and Motor Vehicle Safety Act contains an express preemption provision: When a motor vehicle safety standard is in effect under this chapter, a State or a political subdivision of a State may prescribe or continue in effect a standard applicable to the same aspect of performance of a motor vehicle or motor vehicle equipment only if the standard is identical to the standard prescribed under this chapter. 49 U.S.C. 30103(b)(1). It is this statutory command by Congress that preempts any non-identical State legislative and administrative law addressing the same aspect of performance.

The express preemption provision described above is subject to a savings clause under which ''[c]ompliance with a motor vehicle safety standard prescribed under this chapter does not exempt a person from liability at common law.'' 49 U.S.C. 30103(e). Pursuant to this provision, State common law tort causes of action against motor vehicle manufacturers that might otherwise be preempted by the express preemption provision are generally preserved. However, the Supreme Court has recognized the possibility, in some instances, of implied preemption of such State common law tort causes of action by virtue of NHTSA's rules, even if not expressly preempted. This second way that NHTSA rules can preempt is dependent upon there being an actual conflict between an FMVSS and the higher standard that would effectively be imposed on motor vehicle manufacturers if someone obtained a State common law tort judgment against the manufacturer, notwithstanding the manufacturer's compliance with the NHTSA standard. Because most NHTSA standards established by an FMVSS are minimum standards, a State common law tort cause of action that seeks to impose a higher standard on motor vehicle manufacturers will generally not be preempted. However, if and when such a conflict does exist—for example, when the standard at issue is both a minimum and a maximum standard—the State common law tort cause of action is impliedly preempted. See *Geier* v. *American Honda Motor Co.,* 529 U.S. 861 (2000).

Pursuant to Executive Orders 13132 and 12988, NHTSA has considered whether this proposed rule could or should preempt State common law causes of action. The Agency's ability to announce its conclusion regarding the preemptive effect of one of its rules reduces the likelihood that preemption will be an issue in any subsequent tort litigation. To this end, the agency has examined the nature (*e.g.,* the language

and structure of the regulatory text) and objectives of this proposed rule and finds that this proposed rule, like many NHTSA rules, would prescribe only a minimum safety standard. As such, NHTSA does not intend that this proposed rule would preempt State tort law that would effectively impose a higher standard on motor vehicle manufacturers than that established by this proposed rule. Establishment of a higher standard by means of State tort law would not conflict with the minimum standard proposed here. Without any conflict, there could not be any implied preemption of a State common law tort cause of action.

Civil Justice Reform

With respect to the review of the promulgation of a new regulation, section 3(b) of Executive Order 12988, ''Civil Justice Reform'' (61 FR 4729, February 7, 1996) requires that Executive agencies make every reasonable effort to ensure that the regulation: (1) Clearly specifies the preemptive effect; (2) clearly specifies the effect on existing Federal law or regulation; (3) provides a clear legal standard for affected conduct, while promoting simplification and burden reduction; (4) clearly specifies the retroactive effect, if any; (5) adequately defines key terms; and (6) addresses other important issues affecting clarity and general draftsmanship under any guidelines issued by the Attorney General. This document is consistent with that requirement.

Pursuant to this Order, NHTSA notes as follows. The preemptive effect of this proposed rule is discussed above. NHTSA notes further that there is no requirement that individuals submit a petition for reconsideration or pursue other administrative proceeding before they may file suit in court.

National Technology Transfer and Advancement Act

Under the National Technology Transfer and dvancement Act of 1995 (NTTAA) (Pub. L. 104–113), all Federal agencies and departments shall use technical standards that are developed or adopted by voluntary consensus standards bodies, using such technical standards as a means to carry out policy objectives or activities determined by the agencies and departments. Voluntary consensus standards are technical standards (*e.g.,* material specifications, test methods, sampling procedures, and business practices) that are developed or adopted by voluntary consensus standards bodies, such as the International Organization for Standardization (ISO) and the SAE International (SAE). The NTTAA directs agencies to provide Congress, through OMB, explanations when the agency decides not to use available and applicable voluntary consensus standards. NHTSA searched for but did not find voluntary consensus standards directly applicable to the amendments proposed in this NPRM, other than the minor proposal to update the reference to SAE Recommended Practice J211/1 to the March 1995 version.

However, consistent with the NTTAA, NHTSA reviewed the procedures and regulations developed globally to test child restraints dynamically and found areas of common ground.[137] While there is no single procedure or regulation of another country that sufficiently replicates frontal crashes occurring in the U.S., the agency considered various aspects of international regulations pertaining to the testing of child restraint systems. NHTSA analyzed aspects of the seating assemblies used by NPACS, ECE R.44 and Transport Canada's CMVSS No. 213 and the frontal test speeds used worldwide in sled tests. NHTSA proposes a requirement to test CRSs with Type 2 (3-point) seat belts, which is consistent with CMVSS No. 213. NHTSA tentatively concludes that the provisions would increase CRS safety, and would promote harmonization of our countries' regulatory approaches in testing CRSs.

Unfunded Mandates Reform Act

Section 202 of the Unfunded Mandates Reform Act of 1995 (UMRA), Public Law 104–4, requires Federal agencies to prepare a written assessment of the costs, benefits, and other effects of proposed or final rules that include a Federal mandate likely to result in the expenditure by State, local, or tribal governments, in the aggregate, or by the private sector, of more than $100 million annually (adjusted for inflation with base year of 1995). Adjusting this amount by the implicit gross domestic product price deflator for the year 2010 results in $136 million (110.993/81.606 = 1.36). This NPRM would not result in a cost of $136 million or more to either State, local, or tribal governments, in the aggregate, or the private sector. Thus, this NPRM is not subject to the requirements of sections 202 of the UMRA.

[137] The NTTAA seeks to support efforts by the Federal government to ensure that agencies work with their regulatory counterparts in other countries to address common safety issues. Circular No. A–119, ''Federal Participation in the Development and Use of Voluntary Consensus Standards and in Conformity Assessment Activities,'' January 27, 2016, p. 15.

Executive Order 13609 (Promoting International Regulatory Cooperation)

The policy statement in section 1 of E.O. 13609 provides, in part:

> The regulatory approaches taken by foreign governments may differ from those taken by U.S. regulatory agencies to address similar issues. In some cases, the differences between the regulatory approaches of U.S. agencies and those of their foreign counterparts might not be necessary and might impair the ability of American businesses to export and compete internationally. In meeting shared challenges involving health, safety, labor, security, environmental, and other issues, international regulatory cooperation can identify approaches that are at least as protective as those that are or would be adopted in the absence of such cooperation. International regulatory cooperation can also reduce, eliminate, or prevent unnecessary differences in regulatory requirements.

NHTSA requests public comment on the ''regulatory approaches taken by foreign governments'' concerning the subject matter of this rulemaking. In the discussion above on the NTTAA, NHTSA has noted that it has reviewed the procedures and regulations developed by Transport Canada regarding testing CRSs with Type 2 (3-point) seat belts, and tentatively agrees with the merits of the CMVSS No. 213 provision. Comments are requested on the above policy statement and the implications it has for this rulemaking.

If you have any responses to these questions, please write to NHTSA with your views.

Paperwork Reduction Act

Under the Paperwork Reduction Act of 1995, a person is not required to respond to a collection of information by a Federal agency unless the collection displays a valid OMB control number. Before seeking OMB approval, Federal agencies must provide a 60-day public comment period and otherwise consult with members of the public and affected agencies concerning each collection of information requirement. NHTSA believes the proposed changes to the owner registration program (571.213, S5.8) constitute changes to a ''collection of information'' requirement for child restraint system manufacturers. NHTSA is providing a 60-day comment period on reporting burdens and other matters associated with the proposal.

OMB has promulgated regulations describing what must be included in the request for comment document. Under OMB's regulation (at 5 CFR 1320.8(d)), an agency must ask for public comment on the following:

Whether the proposed collection of information is necessary for the proper

performance of the functions of the agency, including whether the information will have practical utility;

The accuracy of the agency's estimate of the burden of the proposed collection of information, including the validity of the methodology and assumptions used;

How to enhance the quality, utility, and clarity of the information to be collected;

How to minimize the burden of the collection of information on those who are to respond, including the use of appropriate automated, electronic, mechanical, or other technological collection techniques or other forms of information technology, *e.g.* permitting electronic submission of responses.

In compliance with these requirements, NHTSA asks for public comments on the following proposed collection of information:

Title: ''Consolidated Child Restraint System Registration, Labeling and Defect Notifications.'' *OMB Control Number:* 2127–0576.

Requested Expiration Date of Approval: Three years from the approval date.

Type of Request: Revision of a currently approved collection.

Affected Public: Businesses, Individuals and Households.

Summary of the Collection of Information:

Child restraint manufacturers are required to provide an owner registration card for purchasers of child restraint systems in accordance with title 49 of the Code of Federal Regulations (CFR), part 571, section 213, ''Child restraint systems.'' The registration card is required to be perforated into two parts. The top part (information part) contains a message and suitable instructions to be retained by the purchaser. The size, font, color, and layout of the top part are currently prescribed in Figures 9a and 9b,[138] as is the attachment method (fold/perforation) of the information card to the lower part of the form (the mail-in card). The top part of the registration card sets forth: (a) Prescribed wording advising the consumer of the importance of registering; (b) prescribed instructions on how to register; and (c) prescribed statements that the mail-in card is pre-addressed and that postage is already paid.

The bottom part (the mail-in card) is to be returned to the manufacturer by the purchaser. The bottom part includes prepaid return postage, the pre-printed name/address of the manufacturer, the pre-printed model and date of manufacture, and spaces for the purchaser to fill in his/her name and address. Optionally, child restraint manufacturers are permitted to add to the registration form: (a) Specified statements informing CRS owners that they may register online; (b) the internet address for registering with the company; (c) revisions to statements reflecting use of the internet to register; and (d) a space for the consumer's email address.

Child restraint manufacturers are also required to provide printed instructions with new CRSs, with step-by-step information on how the restraint is to be used, and a permanently attached label that gives ''quick look'' information on matters such as use instructions and information on registering the CRS.

Under this NPRM, the Agency is proposing to amend the requirements that prescribe wording advising the consumer of the importance of registering and instructing how to register. NHTSA proposes to stop prescribing the wording. Instead, CRS manufacturers would be given leeway to use their own words to convey the importance of registering the CRS and to instruct how registration is achieved. NHTSA would allow statements instructing consumers to use electronic (or any other means) of registering, as long as instructions are provided on using the paper card for registering (including that the mail-in card is pre-addressed and that the postage is pre-paid). NHTSA also proposes to permit or possibly require a statement that the information collected through the registration process will not be used by the manufacturer for any purpose other than contacting the consumer in the event of a recall.

The Agency also proposes to remove restrictions on manufacturers on their use of size, font, color, layout, and attachment method of the information card portion. NHTSA proposes to continue a current provision that prohibits any other information unrelated to the registration of the CRS, such as advertising or warranty information.

If the proposed changes to the information card are adopted, NHTSA anticipates a change to the hour burden or costs associated with the revised information card, labels and owner's manuals. Child restraint manufacturers produce, on average, a total of approximately 15,000,000 child restraints per year. NHTSA estimates there are 29 CRS manufacturers with 159 distinct CRS models.

The hour burden associated with the revised label consists of the child restraint manufacturer: (a) Designing the information card with statements to instruct how to register, encourage registration and optionally, how to register electronically and how the submitted information will be used; and (b) updating this information on the existing information card, label and instruction manual. NHTSA assumes for purposes of this NPRM analysis that each manufacturer would design the registration information on the information card, label and manuals 5 times per year, whether it is to use different registration cards designs in different CRS models or to adapt the design to improve registrations. The Agency estimates 50 hours of additional burden per child restraint manufacturer for the designing of the registration card (information card portion), labels and manuals that no longer have prescribed text (50 hours × 5 designs/year × 29 CRS manufacturers = 7,250 hours annually).

Estimated Additional Annual Burden: 7,250 hours.

Comments are invited on: Whether the proposed collection of information is necessary for the proper performance of the functions of the Department, including whether the information will have practical utility; the accuracy of the Department's estimate of the burden of the proposed information collection; ways to enhance the quality, utility and clarity of the information to be collected; and ways to minimize the burden of the collection of information on respondents, including the use of automated collection techniques of other forms of information technology.

You may submit comments (identified by the DOT Docket ID Number above) by any of the following methods:

- *Federal eRulemaking Portal:* Go to *http://www.regulations.gov.* Follow the online instructions for submitting comments.
- *Mail:* Docket Management Facility: U.S. Department of Transportation, 1200 New Jersey Avenue SE, West Building Ground Floor, Room W12–140, Washington, DC 20590–0001.
- *Hand Delivery or Courier:* West Building Ground Floor, Room W12–140, 1200 New Jersey Avenue SE, Washington, DC 20590–0001 between 9 a.m. and 5 p.m. ET, Monday through Friday, except Federal holidays.
- *Fax:* 202–493–2251.

Regardless of how you submit your comments, you should mention the docket number of this document. You may call the Docket at (202) 366–9826. Please identify the proposed collection of information for which a comment is provided, by referencing its OMB

[138] Prescribed in FMVSS No. 213, ''Child restraint systems.'' As discussed in this preamble, this NPRM proposes to relieve some of those restrictions.

clearance number. It is requested, but not required, that two copies of the comment be provided. Note that all comments received will be posted without change to *http://www.regulations.gov,* including any personal information provided. Anyone is able to search the electronic form of all comments received into any of our dockets by the name of the individual submitting the comment (or signing the comment, if submitted on behalf of an association, business, labor union, etc.). You may review DOT's complete Privacy Act Statement in the **Federal Register** published on April 11, 2000 (65 FR 19477–78).

Regulation Identifier Number

The Department of Transportation assigns a regulation identifier number (RIN) to each regulatory action listed in the Unified Agenda of Federal Regulatory and Deregulatory Actions. The Regulatory Information Service Center publishes the Unified Agenda in April and October of each year. You may use the RIN contained in the heading at the beginning of this document to find this action in the Unified Agenda.

Plain Language

Executive Order 12866 requires each agency to write all rules in plain language.

Application of the principles of plain language includes consideration of the following questions:

- Have we organized the material to suit the public's needs?
- Are the requirements in the rule clearly stated?
- Does the rule contain technical language or jargon that isn't clear?
- Would a different format (grouping and order of sections, use of headings, paragraphing) make the rule easier to understand?
- Would more (but shorter) sections be better?
- Could we improve clarity by adding tables, lists, or diagrams?
- What else could we do to make the rule easier to understand?

NHTSA has considered these questions and attempted to use plain language in writing this proposed rule. Please inform the agency if you can suggest how NHTSA can improve its use of plain language.

Incorporation by Reference

In updating the standard seat assembly used in the FMVSS No. 213 frontal test, NHTSA would incorporate by reference a drawing package titled, ''NHTSA Standard Seat Assembly; FMVSS No. 213, No. NHTSA–213–2019,'' dated May 2019, into FMVSS No. 213 (49 CFR 571.213). The drawing package consists of detailed drawings of and other materials related to the proposed standard seat assembly. Interested persons could use the drawing package to manufacture the standard seat assembly for their own use if they wished to do so.

NHTSA has placed a copy of the drawing package in the docket for this NPRM. Interested parties can download a copy of the drawing package or view the materials on line by accessing *www.Regulations.gov.* We also will place a copy of the drawing package in the docket of the final rule that incorporates the new standard seat assembly into FMVSS No. 213.

This NPRM also proposes to change an incorporation by reference of SAE Recommended Practice J211, ''Instrumentation for Impact Tests,'' revised 1980, to a 1995 version of J211 (J211/1). SAE J211/1, Revised March 1995, ''Instrumentation for Impact Test—Part 1—Electronic Instrumentation,'' provides guidelines and recommendations for techniques of measurement with electronic instrumentation used in impact tests. These include a series of performance recommendations for data channels, guidelines for selecting a frequency response class for electronic instrumentation, and guidelines on sign convention and digital data processing. The Director of the Federal Register has already approved the incorporation by reference of SAE Recommended Practice J211/1 (1995) into 49 CFR part 571 (see 49 CFR 571.5(l)(4)). Interested parties can obtain a copy of the SAE Recommended Practice J211/1 (March 1995) ''Instrumentation for Impact Test—Part 1—Electronic Instrumentation,'' from SAE International, 400 Commonwealth Drive, Warrendale, PA 15096. Telephone: (724) 776–4841, website: *www.sae.org.*

XV. Public Participation

How do I prepare and submit comments?

To ensure that your comments are correctly filed in the Docket, please include the Docket Number in your comments.

Your comments must be written and in English. Your comments must not be more than 15 pages long. NHTSA established this limit to encourage you to write your primary comments in a concise fashion. However, you may attach necessary additional documents to your comments, and there is no limit on the length of the attachments.

If you are submitting comments electronically as a PDF (Adobe) file, NHTSA asks that the documents be submitted using the Optical Character Recognition (OCR) process, thus allowing NHTSA to search and copy certain portions of your submissions.

Please note that pursuant to the Data Quality Act, in order for substantive data to be relied on and used by NHTSA, it must meet the information quality standards set forth in the OMB and DOT Data Quality Act guidelines. Accordingly, NHTSA encourages you to consult the guidelines in preparing your comments. DOT's guidelines may be accessed at *https://www.transportation.gov/regulations/dot-information-dissemination-quality-guidelines.*

Tips for Preparing Your Comments

When submitting comments, please remember to:

Identify the rulemaking by docket number and other identifying information (subject heading, **Federal Register** date and page number).

Explain why you agree or disagree, suggest alternatives, and substitute language for your requested changes.

Describe any assumptions you make and provide any technical information and/or data that you used.

If you estimate potential costs or burdens, explain how you arrived at your estimate in sufficient detail to allow for it to be reproduced.

Provide specific examples to illustrate your concerns, and suggest alternatives.

Explain your views as clearly as possible, avoiding the use of profanity or personal threats.

To ensure that your comments are considered by the agency, make sure to submit them by the comment period deadline identified in the **DATES** section above.

For additional guidance on submitting effective comments, see https://www.regulations.gov/docs/Tips_For_Submitting_Effective_Comments.pdf.

How can I be sure my comments were received?

If you wish Docket Management to notify you upon its receipt of your comments, enclose a self-addressed, stamped postcard in the envelope containing your comments. Upon receiving your comments, Docket Management will return the postcard by mail.

How do I submit confidential business information?

If you wish to submit any information under a claim of confidentiality, you

should submit three copies of your complete submission, including the information you claim to be confidential business information, to the Chief Counsel, NHTSA, at the address given above under **FOR FURTHER INFORMATION CONTACT**. In addition, you should submit a copy from which you have deleted the claimed confidential business information to the docket. When you send a comment containing information claimed to be confidential business information, you should include a cover letter setting forth the information specified in our confidential business information regulation. (49 CFR part 512.)

Will the Agency consider late comments?

NHTSA will consider all comments that the docket receives before the close of business on the comment closing date indicated above under **DATES**. To the extent possible, NHTSA will also consider comments that the docket receives after that date. If the docket receives a comment too late for the agency to consider it in developing a final rule, NHTSA will consider that comment as an informal suggestion for future rulemaking action.

How can I read the comments submitted by other people?

You may read the comments received by the docket at the address given above under **ADDRESSES**. You may also see the comments on the internet (*http://regulations.gov*).

Please note that even after the comment closing date, NHTSA will continue to file relevant information in the docket as it becomes available. Further, some people may submit late comments. Accordingly, the agency recommends that you periodically check the docket for new material.

Anyone is able to search the electronic form of all comments received into any of our dockets by the name of the individual submitting the comment (or signing the comment, if submitted on behalf of an association, business, labor union, etc.). You may review DOT's complete Privacy Act Statement in the **Federal Register** published on April 11, 2000 (Volume 65, Number 70; Pages 19477–78).

List of Subjects in 49 CFR Part 571

Imports, Motor vehicle safety, Motor vehicles, and Tires; Incorporation by Reference.

In consideration of the foregoing, NHTSA proposes to amend 49 CFR part 571 as set forth below.

PART 571—FEDERAL MOTOR VEHICLE SAFETY STANDARDS

■ 1. The authority citation for Part 571 continues to read as follows:

Authority: 49 U.S.C. 322, 30111, 30115, 30117 and 30166; delegation of authority at 49 CFR 1.95.

■ 2. Section 571.5 is amended by adding and reserving paragraphs (k)(5) through (8), adding paragraph (k)(9), and revising paragraph (l)(4), to read as follows:

§ 571.5 Matter incorporated by reference.

* * * * *

(k) * * *

(5) [Reserved.]

(6) [Reserved.]

(7) [Reserved.]

(8) [Reserved.]

(9) Drawing Package, ''NHTSA Standard Seat Assembly; FMVSS No. 213, No. NHTSA–213–2019,'' (consisting of drawings and a bill of materials), May 2019, into § 571.213.

(l) * * *

(4) SAE Recommended Practice J211/1, revised March 1995, ''Instrumentation for Impact Test—Part 1—Electronic Instrumentation'' into §§ 571.202a; 571.208; 571.213; 571.213a 571.218; 571.403.

* * * * *

■ 3. Section 571.213 is amended by—

■ Adding, in alphabetical order, a definition of ''school bus child restraint system'' to S4;

■ Removing and reserving S5.1.2.2;

■ Revising S5.1.3.1(a);

■ Revising S5.3.1(b);

■ Revising S5.3.2;

■ Revising the introductory text of S5.5.2;

■ Revising S5.5.2(f), S5.5.2(g)(1)(i), removing and reserving S5.5.2(k)(2);

■ Removing and reserving S5.5.2(l)(2), revising S5.5.2(l)(3)(i);

■ Revising S5.5.2(m), S5.5.5(f), S5.5.5(k), S5.6.1.7, S5.6.1.11, S5.6.2.2, S5.8.1, S5.8.2, and S5.9(a);

■ Adding S6.1.1(a)(1)(i) and revising S6.1.1(a)(1)(ii);

■ Revising S6.1.1(a)(2)(i)(B) and S6.1.1(a)(2)(ii)(G);

■ Removing and reserving S6.1.1(c);

■ Revising S6.1.2(a), S6.1.2(a)(1) and S6.1.2(a)(2) and S6.2(d)(1)(ii);

■ Adding S7.1.1;

■ Revising the introductory paragraph to S7.1.2;

■ Revising S7.1.3, and,

■ Adding S10.2.2(e), and Figures 1D, 1D', 1E, 1E', 9c and 9d.

The revised and added text and figures read as follows:

§ 571.213 Child restraint systems.

* * * * *

S4. Definitions * * *

School bus child restraint system means a child restraint system (including a harness) manufactured and sold only for use on school bus seats, that has a label conforming with S5.3.1(b).

* * * * *

S5.1.2.2 [Reserved]

* * * * *

S5.1.3.1 * * *

(a)(1) For each add-on child restraint system manufactured before [*date 3 years after date of publication of final rule*]—

(i) No portion of the test dummy's head shall pass through a vertical transverse plane that is 720 mm or 813 mm (as specified in table 2 to this S5.1.3.1(a)) forward of point Z on the Standard Seat Assembly No. NHTSA–213–2003, measured along the center SORL (as illustrated in figure 1B of this standard); and

(ii) Neither knee pivot point shall pass through a vertical transverse plane that is 915 mm forward of point Z on the Standard Seat Assembly No. NHTSA–213–2003, measured along the center SORL. * * *

(2) For each add-on child restraint system manufactured on or after [*date 3 years after date of publication of final rule*]—

(i) No portion of the test dummy's head shall pass through a vertical transverse plane that is 720 mm or 813 mm (as specified in table 3 to this S5.1.3.1(a)) forward of point Z on the Standard Seat Assembly No. NHTSA–213–2019, measured along the center SORL (as illustrated in figure 1D of this standard); and

(ii) Neither knee pivot point shall pass through a vertical transverse plane that is 915 mm forward of point Z on the Standard Seat Assembly No. NHTSA–213–2019, measured along the center SORL.

TABLE 2 TO S5.1.3.1(a)—ADD-ON FORWARD-FACING CHILD RESTRAINTS MANUFACTURED BEFORE

[Date 3 years after date of publication of final rule]

When this type of child restraint	Is tested in accordance with—	These excursion limits apply	Explanatory note: in the test specified in 2nd column, the child restraint is attached to the test seat assembly in the manner described below, subject to certain conditions
Harnesses, backless booster seats and restraints designed for use by physically handicapped children.	S6.1.2(a)(1)(i)(A) ...	Head 813 mm; Knee 915 mm	Attached with lap belt; in addition, if a tether is provided, it is attached.
School bus child restraint systems.	S6.1.2(a)(1)(i)(A) ...	Head 813 mm; Knee 915 mm	Attached with seat back mount, or seat back and seat pan mounts.
Belt-positioning seats	S6.1.2(a)(1)(ii)	Head 813 mm; Knee 915 mm	Attached with lap and shoulder belt; no tether is attached.
Child restraints other than harnesses, backless booster seats, restraints designed for use by physically handicapped children, school bus child restraint systems, and belt-positioning seats.	S6.1.2(a)(1)(i)(B) ...	Head 813 mm; Knee 915 mm	Attached with lap belt; no tether is attached.
	S6.1.2(a)(1)(i)(D) ...	Head 813 mm; Knee 915 mm	Attached to lower anchorages of child restraint anchorage system; no tether is attached.
	.....	.....	Attached with lap belt; in addition, if a tether is provided, it is attached.
	.....	.....	
	.....	.....	
	S6.1.2(a)(1)(i)(A) ...	Head 720 mm; Knee 915 mm	
	.....	.....	
	S6.1.2(a)(1)(i)(C) ...	Head 720 mm; Knee 915 mm	Attached to lower anchorages of child restraint anchorage system; in addition, if a tether is provided, it is attached.
Child restraints equipped with a fixed or movable surface described in S5.2.2.2 that has belts that are not an integral part of that fixed or movable surface.	S6.1.2(a)(2)(i)	Head 813 mm; Knee 915 mm	Attached with lap belt or lower anchorages of child restraint anchorage system; no tether is attached.

TABLE 3 TO S5.1.3.1(a)—ADD-ON FORWARD-FACING CHILD RESTRAINTS MANUFACTURED ON OR AFTER

[Date 3 years after date of publication of final rule]

When this type of child restraint	Is tested in accordance with—	These excursion limits apply	Explanatory note: in the test specified in 2nd column, the child restraint is attached to the test seat assembly in the manner described below, subject to certain conditions
Harnesses and restraints designed for use by physically handicapped children.	S6.1.2(a)(1)(iv)(A)	Head 813 mm; Knee 915 mm.	Attached with lap and shoulder belt; in addition, if a tether is provided, it is attached.
School bus child restraint systems.	S6.1.2(a)(1)(iv)(A)	Head 813 mm; Knee 915 mm	Attached with seat back mount, or seat back and seat pan mounts.
Booster seats	S6.1.2(a)(1)(iv)(B)	Head 813 mm; Knee 915 mm	Attached with lap and shoulder belt; no tether is attached.
Child restraints other than harnesses, restraints designed for use by physically handicapped children, school bus child restraint systems, and booster seats.	S6.1.2(a)(1)(iv)(B)	Head 813 mm; Knee 915 mm	Attached with lap and shoulder belt; no tether is attached.
	S6.1.2(a)(1)(iv)(D)	Head 813 mm; Knee 915 mm	Attached to lower anchorages of child restraint anchorage system; no tether is attached.
	.....	.....	Attached with lap and shoulder belt; in addition, if a tether is provided, it is attached.
	S6.1.2(a)(1)(iv)(A)	Head 720 mm; Knee 915 mm	
	.....	.....	
	S6.1.2(a)(1)(iv)(C)	Head 720 mm; Knee 915 mm	Attached to lower anchorages of child restraint anchorage system; in addition, if a tether is provided, it is attached.
	.....	.....	
	.....	.....	
Child restraints equipped with a fixed or movable surface described in S5.2.2.2 that has belts that are not an integral part of that fixed or movable surface.	S6.1.2(a)(2)(i)	Head 813 mm; Knee 915 mm	Attached with lap and shoulder belt or lower anchorages of child restraint anchorage system; no tether is attached.

* * * * *

S5.3.1 * * *

(b) School bus child restraint systems must have a label, that conforms in content to Figure 12 and to the requirements of S5.3.1(b)(1) through S5.3.1(b)(3) of this standard, and that is permanently affixed to the part of the school bus child restraint system that attaches the system to a vehicle seat back.

(1) The label must be plainly visible when installed and easily readable.

(2) The message area must be white with black text. The message area must be no less than 20 square centimeters.

(3) The pictogram shall be gray and black with a red circle and slash on a white background. The pictogram shall be no less than 20 mm in diameter.

S5.3.2 Each add-on child restraint system manufactured before [*date 3 years after date of publication of final rule*] and each add-on child restraint

system manufactured on or after [*date 3 years after date of publication of final rule*] shall be capable of meeting the requirements of this standard when installed solely by each of the means indicated in the following tables 5 and 6, respectively, for the particular type of child restraint system:

TABLE 5 TO S5.3.2 MEANS OF INSTALLATION FOR CHILD RESTRAINTS MANUFACTURED BEFORE

[Date 3 years after date of publication of final rule]

Type of add-on child restraint system	Type 1 seat belt assembly	Type 1 seat belt assembly plus a tether anchorage, if needed	Child restraint anchorage system	Type 2 seat belt assembly	Seat back mount, or seat back and seat pan mounts
School bus child restraint systems					X
Other harnesses		X			
Car beds	X				
Rear-facing restraints	X		X		
Belt-positioning seats				X	
All other child restraints	X	X	X		

TABLE 6 TO S5.3.2 MEANS OF INSTALLATION FOR CHILD RESTRAINTS MANUFACTURED ON OR AFTER

[Date 3 years after date of publication of final rule]

Type of add-on child restraint system	Type 2 seat belt assembly plus a tether anchorage, if needed	Child restraint anchorage system	Type 2 seat belt assembly	Seat back mount, or seat back and seat pan mounts
School bus child restraint systems				X
Other harnesses	X			
Car beds			X	
Rear-facing restraints		X	X	
Booster seats			X	
All other child restraints	X	X	X	

* * * * *

S5.5.2 The information specified in paragraphs (a) through (e) and paragraphs (g) through (m) of this section shall be stated in the English language and in letters and numbers that are not smaller than 10 point type. Unless otherwise specified, the information shall be labeled on a white background with black text. Unless written in all capitals, the information shall be stated in sentence capitalization.

* * * * *

(f) Statements or a combination of statements and pictograms specifying the manufacturer's recommendations for the mass and height ranges of children who can safely occupy the system in each applicable mode (rear-facing, forward-facing, booster), except manufacturers shall not recommend forward-facing child restraint systems with internal harnesses for children of masses less than 12 kg (26.5 lb), and shall not recommend booster seats for children of masses less than 18.4 kg (40 lb). For seats that can only be used as belt-positioning seats, manufacturers must include the maximum and minimum recommended height, but may delete the reference to maximum weight.

* * * * *

(g) * * *

(1) * * *

(i) As appropriate, the statements required by the following sections will be bulleted and placed after the statement required by 5.5.2(g)(1) in the following order: 5.5.2(k)(1), 5.5.2(h), 5.5.2(j), and 5.5.2(i).

* * * * *

(k)(1) * * *

(2) [Reserved]

* * * * *

(l) * * *

(2) [Reserved]

(3) * * *

(i) If the child restraint is designed to meet the requirements of this standard when installed by the child restraint anchorage system according to S5.3.2, and if the sum of the weight of the child restraint and the maximum child weight recommended for the child restraint when used with the restraint's internal harness or components is greater than 65 lb when used forward-facing or rear-facing, include the following statement on this installation diagram: ''Do not install by this method for a child weighing more than *.'' At the manufacturer's option, ''*'' is the child weight limit in English units in accordance with S5.5.2(l)(3)(i)(A), (B) or (C). The corresponding child weight limit in metric units may also be included in the statement at the manufacturer's option.

* * * * *

(m) Statements informing the owner of the importance of registering the child restraint for recall purposes and instructing the owner how to register the child restraint at least by mail and by telephone, providing a U.S. telephone number. The following statement must also be provided: ''For recall information, call the U.S. Government's Vehicle Safety Hotline at 1–888–327–4236 (TTY: 1–800–424–9153), or go to *www.NHTSA.gov.*''

* * * * *

S5.5.5 * * *

(f) The same statement(s) provided under S5.5.2(f).

* * * * *

(k) Statements informing the owner of the importance of registering the child restraint for recall purposes and instructing the owner how to register the child restraint at least by mail and by telephone, providing a U.S. telephone number. The following statement must also be provided: ''For recall information, call the U.S. Government's Vehicle Safety Hotline at 1–888–327–4236 (TTY: 1–800–424–9153), or go to *www.NHTSA.gov.*''

* * * * *

S5.6.1.7 Statements informing the owner of the importance of registering the child restraint for recall purposes and instructing the owner how to register the child restraint at least by mail and by telephone, providing a U.S. telephone number. The following statement must also be provided: ''For recall information, call the U.S. Government's Vehicle Safety Hotline at 1–888–327–4236 (TTY: 1–800–424–9153), or go to *www.NHTSA.gov.*''

* * * * *

S5.6.1.11 For school bus child restraint systems, the instructions must include the following statement:

''WARNING! This restraint must only be used on school bus seats. Entire seat directly behind must be unoccupied or have restrained occupants.'' (The instruction's reference to a ''restrained occupant'' refers to an occupant restrained by any user-appropriate vehicle restraint or child restraint system (*e.g.,* lap belt, lap and shoulder belt, booster seat or other child restraint system.)

* * * * *

S5.6.2.2 The instructions for each built-in child restraint system other than a factory-installed restraint shall include statements informing the owner of the importance of registering the child restraint for recall purposes and instructing the owner how to register the child restraint at least by mail and by telephone, providing a U.S. telephone number. The following statement must also be provided: ''For recall information, call the U.S. Government's Vehicle Safety Hotline at 1–888–327–4236 (TTY: 1–800–424–9153), or go to *www.NHTSA.gov.*''

* * * * *

S5.8.1 *Attached registration form.*

(a) Each child restraint system, except a factory-installed built-in restraint system, shall have a registration form attached to any surface of the restraint that contacts the dummy when the dummy is positioned in the system in accordance with S6.1.2 of Standard 213. The form shall not have advertising or any information other than that related to registering the child restraint system.

(b) Each attached form shall provide a mail-in postcard that conforms in size, and in basic content and format to the forms depicted in Figures 9c and 9d of this section.

(1) The mail-in postcard shall:

(i) Have a thickness of at least 0.007 inches and not more than 0.0095 inches;

(ii) Be pre-printed with the information identifying the child restraint for recall purposes, such as the model name or number and date of manufacture (month, year) of the child restraint system to which the form is attached;

(iii) Contain space for the owner to record his or her name, mailing address, email address, and other pertinent information; and

(iv) Be addressed to the manufacturer, and be postage paid.

(c) The registration form attached to the child restraint shall also provide information:

(1) Informing the owner of the importance of registering the child restraint; and,

(2) Instructing the owner how to register the CRS.

(3) Manufacturers must provide statements informing the purchaser that the registration card is pre-addressed and that postage has been paid.

(4) Manufacturers may provide instructions to register the child restraint electronically. If an electronic registration form is used, it must meet the requirements of S5.8.2 of this section.

(5) Manufacturers must provide statements to the owner explaining that the registration card is not a warranty card, and that the information collected from the owner will not be used for marketing purposes.

S5.8.2 *Electronic registration form.*

(a) Each electronic registration form must meet the requirements of this S5.8.2. Each form shall:

(1) Contain statements at the top of the form:

(i) Informing the owner of the importance of registering the CRS; and,

(ii) Instructing the owner how to register the CRS.

(2) Provide as required registration fields, space for the purchaser to record the model name or number and date of manufacture (month, year) of the child restraint system, and space for the purchaser to record his or her name and mailing address. At the manufacturer's option, a space is provided for the purchaser to record his or her email address.

(b) No advertising information shall appear on the electronic registration form.

(c) The electronic registration form may provide information identifying the manufacturer or a link to the manufacturer's home page, a field to confirm submission, and a prompt to indicate any incomplete or invalid fields prior to submission.

(d) If a manufacturer printed the electronic address (in form of a website or code) on the attached registration form provided pursuant to S5.8.1, the electronic registration form shall be accessed directly by the electronic address. Accessing the electronic address (in form of a website or code) that contains the electronic registration form shall not cause additional screens or electronic banners to appear.

S5.9 * * *

(a)(1) Each add-on child restraint system manufactured before [*date 3 years after publication date of final rule*], other than a car bed, harness, school bus child restraint system, and belt-positioning seat, shall have components permanently attached that enable the restraint to be securely fastened to the lower anchorages of the child restraint anchorage system specified in Standard No. 225 (§ 571.225) and depicted in Drawing Package SAS–100–1000, Standard Seat Belt Assembly with Addendum A or in Drawing Package, ''NHTSA Standard Seat Assembly; FMVSS No. 213, No. NHTSA–213–2003'' (both incorporated by reference, see § 571.5). The connectors must be attached to the add-on child restraint by use of a tool, such as a screwdriver. In the case of rear-facing child restraints with detachable bases, only the base is required to have the components. [*NHTSA notes: inclusion of the following text was proposed by a January 23, 2015 NPRM, 80 FR 3744, 3775. ''The connectors designed to attach the add-on child restraint to the lower anchorages of the child restraint anchorage system shall be permanently marked with the pictogram in Figure 15. The pictogram is not less than 9 mm in diameter.''*]

(2) Each add-on child restraint system manufactured on or after [*date 3 years after publication date of final rule*], other than a car bed, harness, school bus child restraint system and belt-positioning seat, shall have components permanently attached that enable the restraint to be securely fastened to the lower anchorages of the child restraint anchorage system specified in Standard No. 225 (§ 571.225) and depicted in Drawing Package, ''NHTSA Standard Seat Assembly; FMVSS No. 213, No. NHTSA–213–2019'' (incorporated by reference, see § 571.5). The connectors must be attached to the add-on child restraint by use of a tool, such as a screwdriver. In the case of rear-facing child restraints with detachable bases, only the base is required to have the components. [*NHTSA notes: inclusion of the following text would be consistent with a January 23, 2015 NPRM, 80 FR at 3775. ''The connectors designed to attach the add-on child restraint to the lower anchorages of the child restraint anchorage system shall be permanently marked with the pictogram in Figure 15.*

The pictogram is not less than 9 mm in diameter.'']

* * * * *

S6.1.1 * * *

(a) * * *

(1) * * *

(i) The test device for add-on restraint systems manufactured before *date 3 years after publication date of final rule*] is a standard seat assembly consisting of a simulated vehicle bench seat, with three seating positions, which is depicted in Drawing Package, ''NHTSA Standard Seat Assembly; FMVSS No. 213, No. NHTSA–213–2003,'' (consisting of drawings and a bill of materials) dated June 3, 2003 (incorporated by reference; see § 571.5). The assembly is mounted on a dynamic test platform so that the center SORL of the seat is parallel to the direction of the test platform travel and so that movement between the base of the assembly and the platform is prevented. As illustrated in Figures 1A and 1B of this standard, attached to the seat belt anchorage points provided on the standard seat assembly are Type 1 seat belt assemblies in the case of add-on child restraint systems other than belt-positioning seats, or Type 2 seat belt assemblies in the case of belt-positioning seats. These seat belt assemblies meet the requirements of Standard No. 209 (§ 571.209) and have webbing with a width of not more than 2 inches, and are attached to the anchorage points without the use of retractors or reels of any kind. As illustrated in Figures 1A' and 1B' of this standard, attached to the standard seat assembly is a child restraint anchorage system conforming to the specifications of Standard No. 225 (§ 571.225).

(ii) The test device for add-on restraint systems manufactured on or after [*date 3 years after publication date of final rule*] is a standard seat assembly consisting of a simulated vehicle rear seat which is depicted in Drawing Package, ''NHTSA Standard Seat Assembly; FMVSS No. 213, No. NHTSA–213–2019,'' (consisting of drawings and a bill of materials) dated May 2019 (incorporated by reference; see § 571.5). The assembly is mounted on a dynamic test platform so that the center SORL of the seat is parallel to the direction of the test platform travel and so that movement between the base of the assembly and the platform is prevented. As illustrated in Figures 1D and 1E of this standard, attached to the seat belt anchorage points provided on the standard seat assembly is a Type 2 seat belt assembly. The seat belt assembly meets the requirements of Standard No. 209 (§ 571.209) and has webbing with a width of not more than 2 inches, and are attached to the anchorage points without the use of retractors or reels of any kind. As illustrated in Figures 1D' and 1E' of this standard, attached to the standard seat assembly is a child restraint anchorage system conforming to the specifications of Standard No. 225 (§ 571.225).

(2) * * *

(i) * * *

(B) The platform is instrumented with an accelerometer and data processing system having a frequency response of 60 Hz channel frequency class as specified in SAE Recommended Practice J211/1 (1995), ''Instrumentation for Impact Tests,'' (incorporated by reference, see § 571.5). The accelerometer sensitive axis is parallel to the direction of test platform travel.

(ii) * * *

(G) All instrumentation and data reduction is in conformance with SAE Recommended Practice J211/1 (1995), ''Instrumentation for Impact Tests,'' (incorporated by reference, see § 571.5).

* * * * *

S6.1.1(c) [Reserved]

S6.1.2 *Dynamic test procedure.*

(a) Activate the built-in child restraint or attach the add-on child restraint to the seat assembly in any of the following manners, at the agency's option.

(1) *Test configuration I.*

(i) *Child restraints other than belt-positioning seats, manufactured before [date 3 years from date of publication of final rule].* Attach the child restraint in any of the following manners specified in S6.1.2(a)(1)(i)(A) through (D), unless otherwise specified in this standard.

(A) Install the child restraint system at the center seating position of the standard seat assembly, in accordance with the manufacturer's instructions provided with the system pursuant to S5.6.1, except that the standard lap belt is used and, if provided, a tether strap may be used. Attach school bus child restraint systems in accordance with the manufacturer's instructions provided with the system pursuant to S5.6.1, *i.e.,* the seat back or seat back and seat pan mounts are used.

(B) Except for a harness, a school bus child restraint system, a backless child restraint system with a tether strap, and a restraint designed for use by physically handicapped children, install the child restraint system at the center seating position of the standard seat assembly as in S6.1.2(a)(1)(i)(A), except that no tether strap (or any other supplemental device) is used.

(C) Install the child restraint system using the child restraint anchorage system at the center seating position of the standard seat assembly in accordance with the manufacturer's instructions provided with the system pursuant to S5.6.1. The tether strap, if one is provided, is attached to the tether anchorage.

(D) Install the child restraint system using only the lower anchorages of the child restraint anchorage system as in S6.1.2(a)(1)(i)(C). No tether strap (or any other supplemental device) is used.

(ii) *Belt-positioning seats manufactured before [date 3 years from date of publication of final rule].* A belt-positioning seat is attached to either outboard seating position of the standard seat assembly in accordance with the manufacturer's instructions provided with the system pursuant to S5.6.1 using only the standard vehicle lap and shoulder belt and no tether (or any other supplemental device). Place the belt-positioning seat on the standard seat assembly such that the center plane of the belt-positioning seat is parallel and aligned to the center plane of the outboard seating positions on the standard seat assembly and the base of the belt-positioning seat is flat on the standard seat assembly cushion. Move the belt-positioning seat rearward on the standard seat assembly until some part of the belt-positioning seat touches the standard seat assembly back. Keep the belt-positioning seat and the seating position center plane aligned as much as possible. Apply 133 N (30 pounds) of force to the front of the belt-positioning seat rearward into the standard seat assembly and release.

(iii) In the case of each built-in child restraint system, activate the restraint in the specific vehicle shell or the specific vehicle, in accordance with the manufacturer's instructions provided in accordance with S5.6.2.

(iv) *Child restraints other than booster seats, manufactured on or after [date 3 years from date of publication of final rule].* At the agency's option, attach the child restraint in any of the following manners specified in S6.1.2(a)(1)(iv)(A) through (D), unless otherwise specified in this standard.

(A) Install the child restraint system on the standard seat assembly, in accordance with the manufacturer's instructions provided with the system pursuant to S5.6.1, except that the standard lap and shoulder belt is used and, if provided, a tether strap may be used. Attach the school bus child restraint system in accordance with the manufacturer's instructions provided with the system pursuant to S5.6.1, *i.e.,* the seat back or seat back and seat pan mounts are used.

(B) Except for a harness, a school bus child restraint system, and a restraint designed for use by physically handicapped children, install the child restraint system on the standard seat assembly as in S6.1.2(a)(1)(iv)(A), except that no tether strap (or any other supplemental device) is used.

(C) Install the child restraint system using the child restraint anchorage system on the standard seat assembly in accordance with the manufacturer's instructions provided with the system pursuant to S5.6.1. The tether strap, if one is provided, is attached to the tether anchorage.

(D) Install the child restraint system using only the lower anchorages of the child restraint anchorage system as in S6.1.2(a)(1)(iv)(C). No tether strap (or any other supplemental device) is used.

(v) Booster seats manufactured on or after *[date 3 years from date of publication of final rule].* A booster seat is attached to the standard seat assembly in accordance with the manufacturer's instructions provided with the system pursuant to S5.6.1 using only the standard lap and shoulder belt and no tether (or any other supplemental device). Place the booster seat on the standard seat assembly such that the center plane of the booster seat is parallel and aligned to the center plane of the standard seat assembly and the base of the booster seat is flat on the standard seat assembly cushion. Move the booster seat rearward on the standard seat assembly until some part of the booster seat touches the standard seat assembly back. Keep the booster seat and the seating position center plane aligned as much as possible. Apply 133 N (30 pounds) of force to the front of the booster seat rearward into the standard seat assembly and release.

(2) *Test configuration II.* (i) In the case of each add-on child restraint system manufactured before *[date 3 years from date of publication of final rule]* which is equipped with a fixed or movable surface described in S5.2.2.2 that has belts that are not an integral part of that fixed or movable surface, install the add-on child restraint system at the center seating position of the standard seat assembly using only the standard seat lap belt to secure the system to the standard seat. Do not attach the top tether. In the case of each add-on child restraint system manufactured on or after *[date 3 years from date of publication of final rule]* which is equipped with a fixed or movable surface described in S5.2.2.2 that has belts that are not an integral part of that fixed or movable surface, install the add-on child restraint system on the standard seat assembly using only the lap and shoulder belt to secure the system to the standard seat, or at NHTSA's option, only the lower anchorages of the child restraint anchorage system. Do not attach the top tether.

(ii) In the case of each built-in child restraint system which is equipped with a fixed or movable surface described in S5.2.2.2 that has belts that are not an integral part of that fixed or movable surface, activate the system in the specific vehicle shell or the specific vehicle in accordance with the manufacturer's instructions provided in accordance with S5.6.2.

* * * * *

(d) Belt adjustment.

(1) * * *

(i) * * *

(ii) All Type I belt systems used to attach an add-on child restraint to the standard seat assembly, and any provided additional anchorage belt (tether), are tightened to a tension of not less than 53.5 N and not more than 67 N, as measured by a load cell used on the webbing portion of the belt. All belt systems used to attach a school bus child restraint system are also tightened to a tension of not less than 53.5 N and not more than 67 N, by measurement means specified in this paragraph.

* * * * *

S7.1.1 Child restraints that are manufactured on or after *date three years after date of publication of the final rule*], are subject to the following provisions.

(a) A child restraint that is recommended by its manufacturer in accordance with S5.5 for use either by children in a specified mass range that includes any children having a mass of not greater than 5 kg (11 lb), or by children in a specified height range that includes any children whose height is not greater than 650 mm, is tested with a 49 CFR part 572 subpart K dummy (newborn infant dummy).

(b) A child restraint that is recommended by its manufacturer in accordance with S5.5 for use either by children in a specified mass range that includes any children having a mass greater than 5 kg but not greater than 10 kg (11 to 22 lb), or by children in a specified height range that includes any children whose height is greater than 650 mm but not greater than 750 mm, is tested with a 49 CFR part 572 subpart K dummy (newborn infant dummy), and a part 572 subpart R dummy (CRABI 12-month-old infant dummy).

(c) A child restraint that is recommended by its manufacturer in accordance with S5.5 for use either by children in a specified mass range that includes any children having a mass greater than 10 kg but not greater than 13.6 kg (22 to 30 lb), or by children in a specified height range that includes any children whose height is greater than 750 mm but not greater than 870 mm, is tested with a part 572 subpart R dummy (CRABI 12-month-old infant dummy).

(d) A child restraint that is recommended by its manufacturer in accordance with S5.5 for use either by children in a specified mass range that includes any children having a mass greater than 13.6 kg but not greater than 18.2 kg (30 to 40 lb), or by children in a specified height range that includes any children whose height is greater than 870 mm but not greater than 1100 mm, is tested with a part 572 subpart P dummy (Hybrid III 3-year-old dummy).

(e) A child restraint that is recommended by its manufacturer in accordance with S5.5 for use either by children in a specified mass range that includes any children having a mass greater than 18.2 kg (40 lb) but not greater than 22.7 kg (50 lb), or by children in a specified height range that includes any children whose height is greater than 1100 mm but not greater than 1250 mm is tested with a 49 CFR part 572, subpart N dummy (Hybrid III 6-year-old dummy).

(f) A child restraint that is recommended by its manufacturer in accordance with S5.5 for use either by children in a specified mass range that includes any children having a mass greater than 22.7 kg (50 lb) but not greater than 29.5 kg (65 lb) or by children in a specified height range that includes any children whose height is greater than 1100 mm but not greater than 1250 mm is tested with a 49 CFR part 572, subpart N dummy (Hybrid III 6-year-old dummy) and with a part 572, subpart S dummy (Hybrid III 6-year-old weighted dummy).

(g) A child restraint that is recommended by its manufacturer in accordance with S5.5 for use either by children in a specified mass range that includes any children having a mass greater than 29.5 kg (65 lb) or by children in a specified height range that includes any children whose height is greater than 1250 mm is tested with a 49 CFR part 572, subpart T dummy (Hybrid III 10-year-old dummy).

S7.1.2 Child restraints that are manufactured before [*date three years after date of publication of the final rule*], are subject to the following provisions and S7.1.3.

* * * * *

S7.1.3 *Voluntary use of alternative dummies.* For child restraint systems

manufactured before [*date 3 years after date of publication of a final rule*], at the manufacturer's option (with said option irrevocably selected prior to, or at the time of, certification of the restraint), when this section specifies use of the 49 CFR part 572, subpart N (Hybrid III 6-year-old dummy) test dummy, the test dummy specified in 49 CFR part 572, subpart I (Hybrid II 6-year-old dummy) may be used in place of the subpart N test dummy.

* * * * *

S10.2.2 * * *

(e)(1) When using the Hybrid III 3-year-old (part 572, subpart P) dummy in a rear-facing child restraint system with an internal restraint system, remove the knee stop screw (210–6516 in drawing 210–5000–1,-2; incorporated by reference, see § 571.5) from the right and left knee so as to let the knees hyperextend.

(2) Place the Subpart P dummy in the forward- or rear-facing child restraint system being tested so that the back of the dummy torso contacts the back support surface of the system. For a child restraint system equipped with a fixed or movable surface described in S5.2.2.2 that is being tested under the conditions of test configuration II, do not attach any of the child restraint belts unless they are an integral part of the fixed or movable surface. For all other child restraint systems and for a child restraint system with a fixed or movable surface that is being tested under the conditions of test configuration I, attach all appropriate child restraint belts and tighten them as specified in S6.1.2. Attach all appropriate vehicle belts and tighten them as specified in S6.1.2. Position each movable surface in accordance with the instructions that the manufacturer provided under S5.6.1 or S5.6.2.

Figures to § 571.213

* * * * *

BILLING CODE 4910–59–P

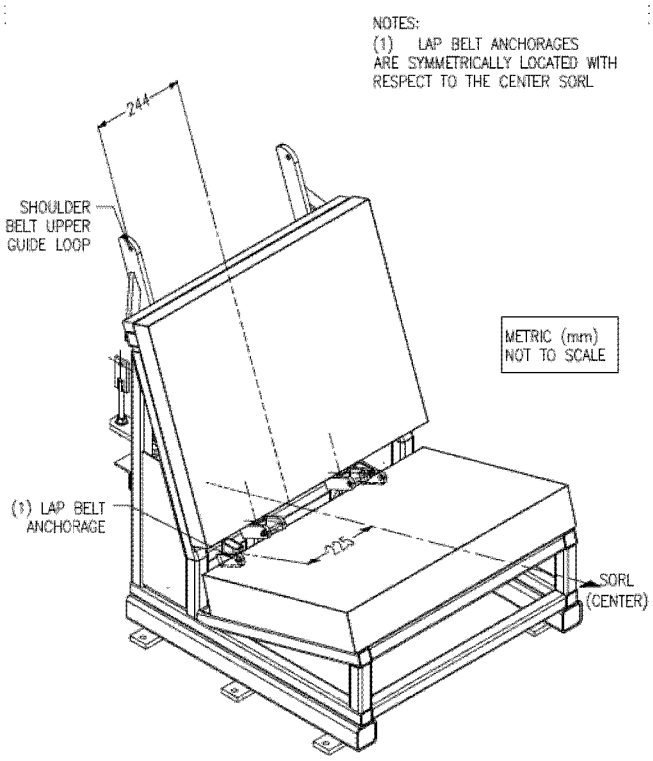

SEAT ORIENTATION REFERENCE LINE AND SEAT BELT ANCHORAGE POINT LOCATIONS ON THE STANDARD SEAT ASSEMBLY

Figure 1D

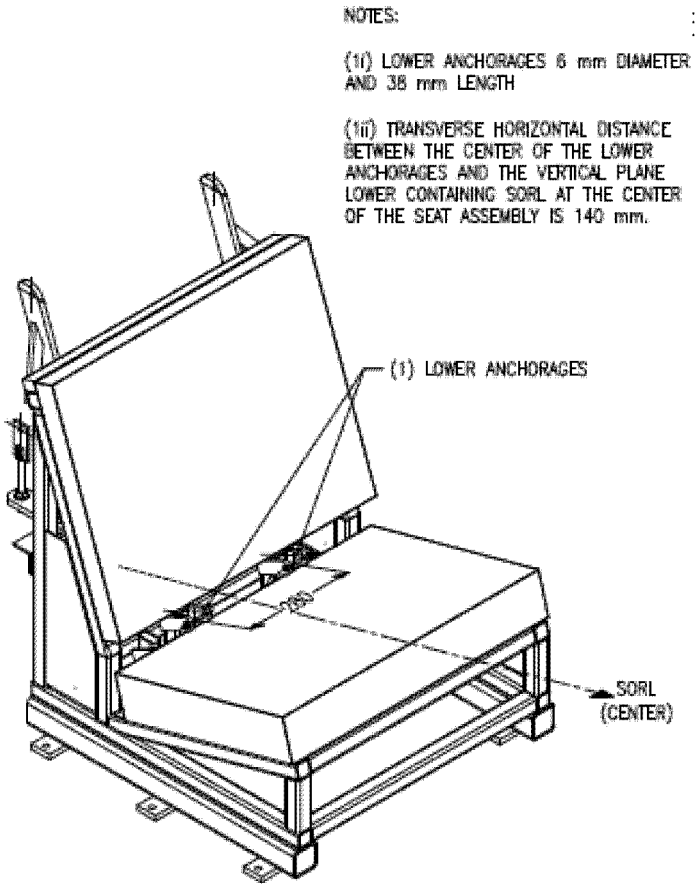

SEAT ORIENTATION REFERENCE LINE AND LOCATION OF THE LOWER ANCHORAGES OF THE CHILD RESTRAINT ANCHORAGE SYSTEM ON THE STANDARD SEAT ASSEMBLY

Figure 1D'

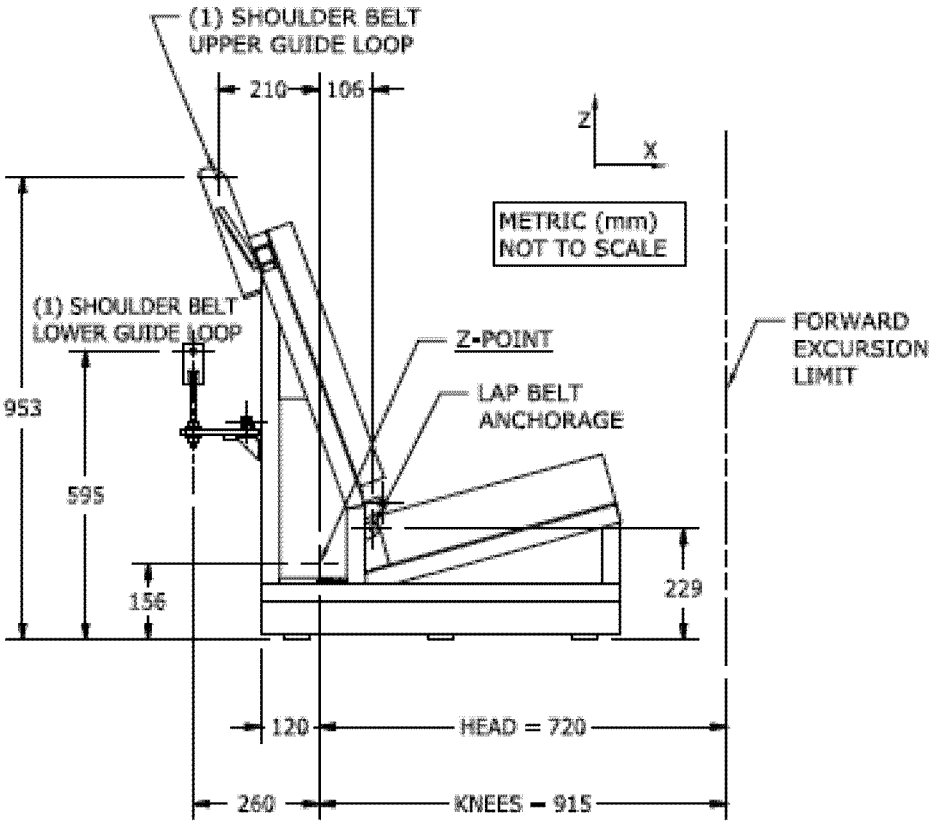

NOTES:
(1) SHOULDER BELT UPPER AND LOWER GUIDE LOOPS ARE LOCATED 244 mm RIGHT AND LEFT OF THE CENTER SORL AS SHOWN IN FIGURE 1A

LOCATION OF SHOULDER BELT UPPER AND LOWER GUIDE LOOPS AND FORWARD EXCURSION LIMITS ON THE STANDARD SEAT ASSEMBLY

Figure 1E

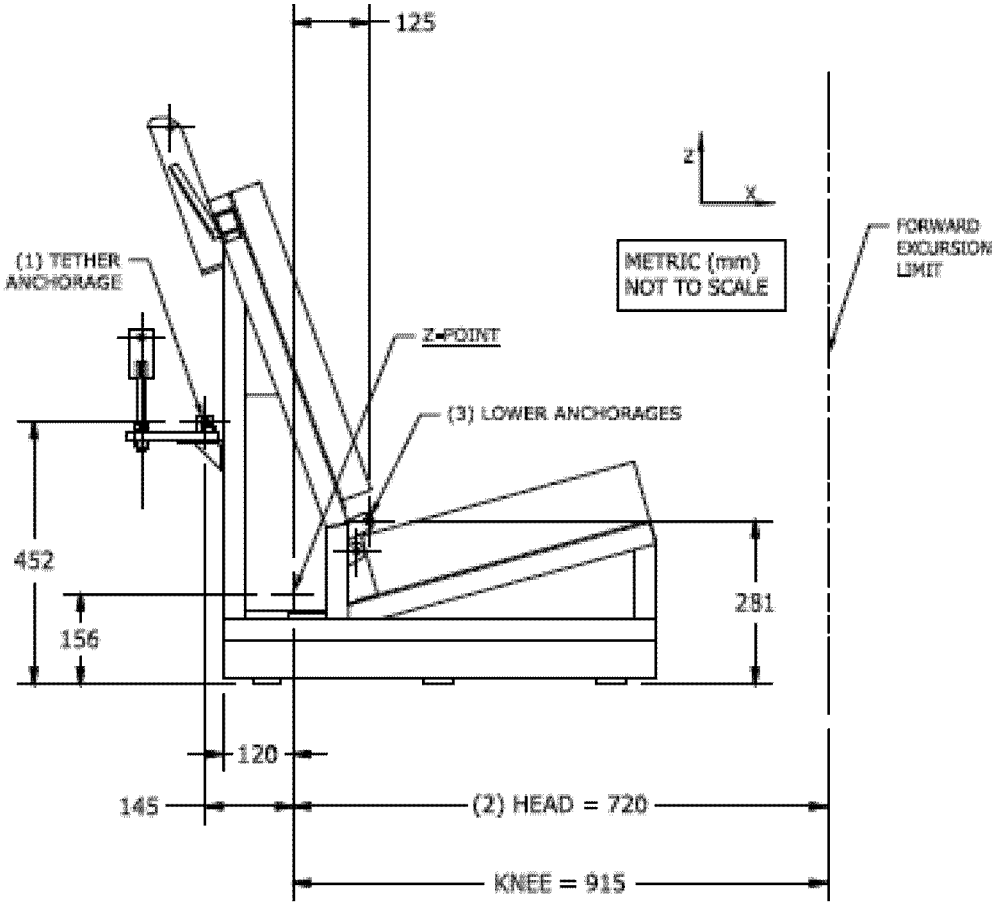

NOTES:
(1) TETHER ANCHORAGE LOCATED ON CENTER SDRL
(2) HEAD EXCURSION LIMIT IS (I) 720 mm WITH TETHER ATTACHED AND (II) 813 mm WITH TETHER UNATTACHED
(3) LOWER ANCHORAGES LOCATED 125 mm FORWARD OF Z POINT AND 281 mm UPWARD FROM FLOOR

LOCATION OF THE CHILD RESTRAINT ANCHORAGES AND FORWARD EXCURSION LIMITS ON THE STANDARD SEAT ASSEMBLY
Figure 1E'

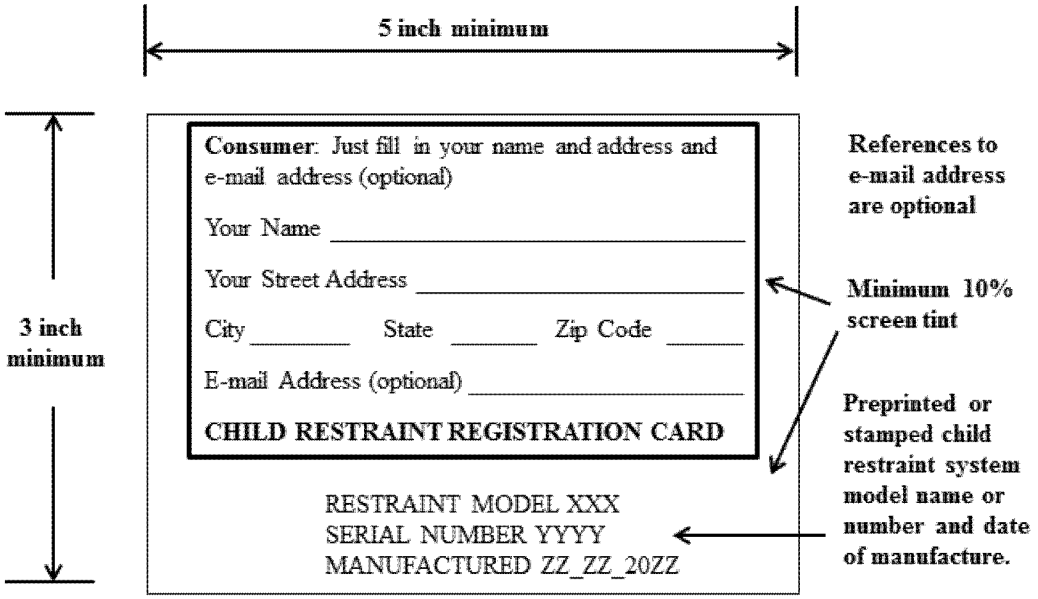

Figure 9c – Registration mail-in postcard for child restraint systems – product identification number and purchaser information side

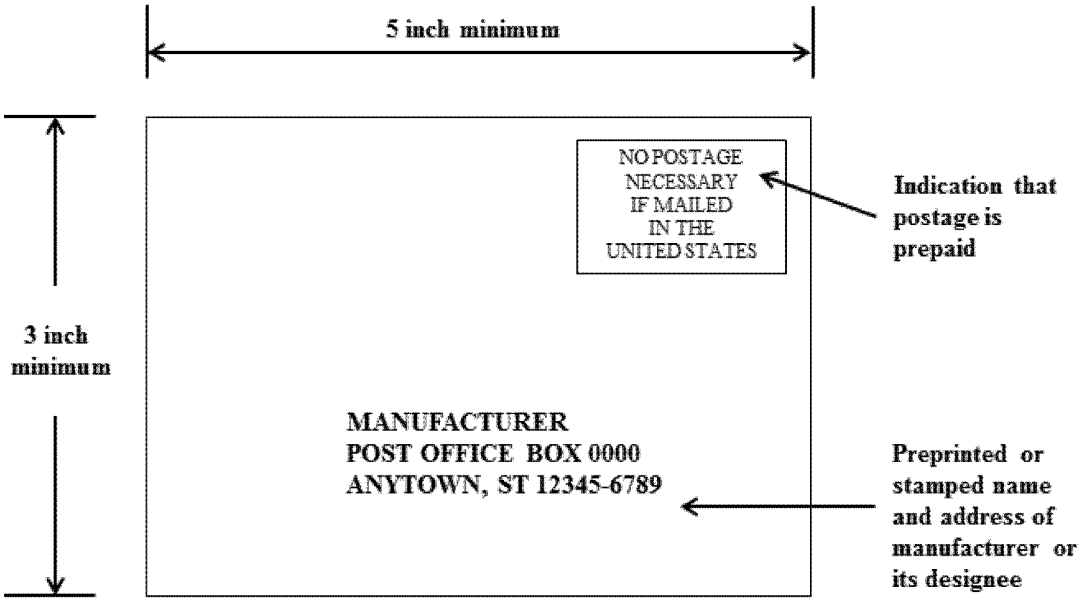

Figure 9d – Registration mail-in postcard for child restraint systems – address side

BILLING CODE 4910–59–C

Note: The following appendix will not appear in the Code of Federal Regulations.

Appendix to Preamble

Estimation of Potential Benefits From the Proposed Increase in the Manufacturer-Recommended Minimum Child Weight for Use of Forward-Facing CRSs and Booster Seats

Under FMVSS No. 213, manufacturers label their child restraints with information about the children for whom the CRS is recommended, based on the children's height and weight. Children should be rear-facing until they are at least 1 year in age, as physically they are safer riding rear-facing so that their head and neck are supported by the CRS back structure in a crash. Currently, the standard requires forward-facing child restraints to be recommended for children weighing a minimum of 9 kg (20 lb). This NPRM proposes to raise this minimum to 12 kg (26.5 lb), because 12 kg (26.5 lb) corresponds to the weight of a 95th percentile one-year-old. In addition, FMVSS No. 213 currently requires booster seats to be recommended for children weighing at least 13.6 kg (30 lb). This NPRM proposes to raise that weight limit to 18.2 kg (40 lb). The proposed increase in the manufacturer-recommended minimum child weight for forward-facing CRSs reduce the premature graduation from rear-facing CRSs to forward-facing CRSs, and from forward-facing car safety seats to booster seats. The proposed changes would align the standard with current best practices on child passenger safety and are anticipated to have a beneficial effect on child passenger safety. This appendix provides the data and analysis methodology to illustrate and estimate that beneficial effect, in terms of potential lives saved and injuries prevented.

(1) Increasing Manufacturer-Recommended Minimum Child Weight for Forward-Facing CRS Use From 9 kg to 12 kg (20 lb to 26.5 lb)

Increasing the manufacturer-recommended minimum child weight for use of forward-facing CRSs from 9 kg to 12 kg (20 lb to 26.5 lb) could potentially reduce premature graduation of children to forward-facing CRSs. NHTSA recommends [139] that all children up to the age of one year should always ride in rear-facing CRSs and that children 1 to 3 years of age ride in rear-facing CRSs as long as possible and until they reach the upper height or weight limit allowed by the CRS's manufacturer. By supporting the entire posterior torso, neck, head, and pelvis, a rear-facing CRS distributes crash forces over the entire body rather than focusing them only at belt contact points as with a forward-facing CRS. Therefore, biomechanical experts, together with the child passenger safety community, recommend rear-facing CRS use for infants and toddlers.

To determine the potential lives saved and injuries prevented by this proposal, the Agency reviewed literature and analyzed available data for: (a) Estimating the incremental effectiveness of rear-facing CRSs over forward-facing CRSs in protecting children in crashes; (b) determining the number of children killed and injured in CRSs categorized by age of child; (c) the percentage of children by age in rear-facing and forward-facing CRSs; (d) the percentage of children by age weighing less than 12 kg (26.5 lb); and, (e) the percentage of caregivers who would follow manufacturer's instructions provided on CRS labels and the users' manual regarding use of the CRS.

Incremental Effectiveness of Rear-Facing CRSs Over Forward-Facing CRSs

McMurry, et al.[140] examined the National Automotive Sampling System—Crashworthiness Data System (NASS–CDS) data files for the years 1988–2015 to compare the injury risk for children up to the age of 2 years in rear-facing CRSs and forward-facing CRSs. The data showed an extremely low injury rate in children up to 2 years of age in both rear-facing CRSs and forward-facing CRSs. McMurry noted that children 2–YO and younger experienced lower rates of injury when restrained in rear-facing CRSs than when restrained in forward-facing CRSs, but this difference was not statistically significant. Due to the absence of any other field data to estimate the incremental effectiveness of rear-facing CRS over forward-facing CRSs for children up to 2 years of age, NHTSA used the weighted data in NASS–CDS reported by McMurry, as shown in Table A–1. Though the weighted data is provided as a percentage, it can still be used to determine incremental effectiveness of rear-facing CRS over forward-facing CRS since effectiveness is estimated from a ratio of injured to uninjured occupants.

TABLE A–1—NUMBER OF INJURED AND UNINJURED CHILD OCCUPANTS BY AGE AND CRS ORIENTATION (RFCRS OR FFCRS) ALONG WITH SURVEY-WEIGHTED PERCENTAGES

[NASS–CDS 1988–2015]

Age	RFCRS	FFCRS
Infants (0–11 months)		
Uninjured	551 (99.4%)	71 (99.3%)
Injured	27 (0.6%)	3 (0.7%)
Effectiveness of RFCRSs over FFCRSs	=1-(0.6/99.4)/(0.7/99.3) = 0.144	
1 year-olds (12–23 months)		
Uninjured	98 (99.8%)	339 (99.5%)
Injured	3 (0.2%)	14 (0.5%)
Effectiveness of RFCRSs over FFCRSs	=1-(0.2/99.8)/(0.5/99.5) = 0.601	

McMurry's data in Table A–1 shows that the effectiveness of rear-facing CRSs over forward-facing CRSs for 0–11 months is 14.4 percent and that for 12–23 months is 60.1 percent. Based on biomechanical testing, the incremental protection offered by rear-facing CRSs over forward-facing CRSs should be greater for smaller/younger children than larger/older children. The 60.1 percent incremental effectiveness of rear-facing CRSs over forward-facing CRSs for 12–23 month-old children seems to be rather high considering the low fatality and injury rates for this age group, so the agency used the same effectiveness rate for this age group as that computed for the 0–11 month age group. Therefore, for estimating the potential benefits of raising the minimum child weight limit for forward-facing CRSs from 9 kg to 12 kg, the incremental effectiveness of 14.4 percent was used for rear-facing CRSs in preventing fatalities among children 0 to 23 months over that of forward-facing CRSs.

Number of Children Retrained in CRSs Killed Annually in Motor Vehicle Crashes

The Fatality Analysis Reporting System (FARS) data files for the 5-year period from 2010 to 2014 were analyzed to determine the annual average number of children restrained

[139] NHTSA's Car Seat Recommendations: *https://www.nhtsa.gov/sites/nhtsa.dot.gov/files/nhtsacarseatrecommendations.pdf.*

[140] McMurry, T.L., Arbogast, K.B., Sherwood, C.P., Vaca, F., Bull, M., Crandall, J.R., Kent, R.W., ''Rear-facing versus forward-facing child restraints: an updated assessment,'' Injury Prevention, 2017;0:1–5.doi:10.1136/injuryprev-2017–042512.

in CRSs killed in motor vehicle crashes (see Table A–2). These data files were also analyzed to determine the percentage of fatally injured children in different types of CRSs (rear-facing CRSs, forward-facing CRSs, and booster seats) (see Table A–3).

TABLE A–2—AVERAGE ANNUAL FATALITIES AMONG 0–7 YEAR-OLD CHILDREN RESTRAINED IN CRSS IN REAR SEATING POSITIONS OF LIGHT VEHICLES

[2010–2014 FARS]

	Age (years)									
Crash mode	<1	1	2	3	4	5	6	7	Total	Percent total
Rollover	9.4	8.2	6.6	6.2	6.2	6.2	3.6	2.2	48.6	28.0
Front	9.2	11.8	9	11.8	8.8	5.8	4.6	2.2	63.2	36.4
Side	8.2	6.2	5.4	6	3.6	3	2.6	1.8	36.8	21.2
Near-side	5.2	3.8	3.6	4	1.8	1.8	1.8	1.2	23.2	13.4
Far-side	3	2.4	1.8	2	1.8	1.2	0.8	0.6	13.6	7.8
Rear	4.2	5.6	4.2	3	3.2	2.6	1.4	0.8	25.0	14.4
Total	31	31.8	25.2	27	21.8	17.6	12.2	7	173.6	100.0

TABLE A–3—PERCENTAGE OF FATALLY INJURED CHILDREN RESTRAINED IN DIFFERENT CRS TYPES OF CRSS IN REAR SEATING POSITIONS OF LIGHT VEHICLES BY AGE OF CHILD

[FARS 2010–2014]

	Age (years)							
CRS type	<1 (percent)	1 (percent)	2 (percent)	3 (percent)	4 (percent)	5 (percent)	6 (percent)	7 (percent)
RFCRS	73.5	11.9	1.6	0.0	0.0	0.0	0.0	0.0
FFCRS	26.5	85.1	78.7	58.2	38.5	36.5	23.1	11.1
Booster	0.0	3.0	19.7	41.8	58.5	63.5	76.9	88.9

Percentage of Children 0 to 3–YO Weighing Less Than 12 kg (26.5 lb)

The percent of children weighing less than 12 kg (26.5 lb) for children of age less than 1 year, 1-year, 2 years, and 3-years was determined using the 2000 Center for Disease Control (CDC) Growth Charts. The percent of girls and boys weighing less than 12 kg from the growth charts for each month from newborn to 36 months of age was determined and averaged for 12-month periods to determine the percentage of children weighing less than 12 kg for less than 1-year, 1-year, 2-years, and 3-years of age (see Table A–4).[141]

TABLE A–4—PERCENT OF CHILDREN WEIGHING LESS THAN 12 kg (26.5 lb) BY CHILD AGE

[2000 CDC growth charts]

	<1 YO (percent)	1 YO (percent)	2 YO (percent)	3 YO (percent)
Percentile	99.8	71.4	22.3	0

Percentage of Caregivers Following Information on CRS Use on CRS Labels or the Users' Manual

The proposed raising of the manufacturer-recommended minimum child weight for use of forward-facing CRSs from 9 kg to 12 kg could reduce premature graduation of children from rear-facing CRSs to forward-facing CRSs. However, this is contingent upon caregivers reading and following the manufacturer-supplied information on CRS use on the CRS labels and the Users' manual.

There is no field data on the percentage of caregivers who would follow the information on CRS labels or the manual but inferences can be made from studies on CRS misuse. NHTSA conducted a detailed review of side impact crashes for the years 2002—2009[142] and frontal impact crashes for the years 2003–2013[143] where a CRS restrained child was killed. This review showed that, among survivable side and front crashes with a child fatality, nearly half the children were incorrectly restrained in CRSs, meaning that the CRSs were either not installed appropriately in the vehicle and/or the children were not restrained correctly in CRSs in accordance with manufacturer's instructions. Further, NHTSA's National Child Restraint Use Special Study (NCRUSS) published in 2015 noted CRS misuse of about 46 percent (DOT HS 812 157). This high rate of CRS misuse means that a change in the minimum child weight for use of forward-facing CRSs that is provided on CRS labels and in the Users' manual is highly unlikely to lead to all caregivers making the switch, as existing instructions themselves are not followed by all caregivers.

The Agency does not have further information on the efficacy of instructions on CRS labels and the manual and is therefore using the low rates of 15 percent and 50 percent of caregivers that would follow the instructions on the CRS labels and manual for forward-facing CRS use.

Estimating Lives Saved

Using the information derived from field data on the incremental effectiveness of rear-facing CRSs over forward-facing CRSs, the number of children killed who are restrained in forward-facing CRSs, the percentage of children weighing less than 12 kg, and the assumptions regarding caregivers following CRS use instructions supplied by the

[141] Data from 2000 CDC *http://www.cdc.gov/growthcharts.*

[142] PRIA for the January 28, 2014 NPRM to include a side impact test in FMVSS No. 213 (79 FR 4570, Docket No. NHTSA–2014–0012).

[143] This NPRM upgrading the frontal sled test in FMVSS No. 213.

manufacturer, the agency estimates that the lives of 0.7–2.3 children 0–2 YO could be saved (see Table A–5) by raising the manufacturer-recommended minimum child weight for use of forward-facing CRSs from 9 kg to 12 kg.

TABLE A–5—ESTIMATE OF POTENTIAL LIVES SAVED FROM THE PROPOSED INCREASE IN THE MANUFACTURER-RECOMMENDED MINIMUM CHILD WEIGHT FOR USE OF FORWARD-FACING CRSS FROM 9 kg TO 12 kg

	Age (years)		
	<1	1	2
Average Annual Fatalities (a)	31	31.8	25.2
Percent in FFCRS (b)	26.5%	85.1%	78.7%
Percent weight less than 26.5 lb (c)	99.8%	71.4%	22.3%
Target Population (d) = (a)×(b)×(c)	8.2	19.3	4.4
Effectiveness of RFCRSs vs FFCRSs (e)	14.4%	14.4%	14.4%
Percent people following instructions (f)	15%–50%	15%–50%	15%–50%
Benefits for 15% follow instructions (d)×(e)×0.15	0.2	0.4	0.1
Benefits for 50% follow instructions (d)×(e)×0.5	0.6	1.4	0.3

Moderate-to-Critical Injuries Prevented Among Children Restrained in CRSs in Motor Vehicle Crashes

The agency analyzed NASS–CDS data files for the year 2010–2014 to determine average annual Abbreviated Injury Scale (AIS) [144] 2+ injured children who are restrained in CRSs in rear seating positions of light vehicles. On an annual average, there were 31 children under 1 year of age and 77 children 1–2 years old that sustained AIS 2+ injuries for the period 2010–2014 (See Table A–6).

TABLE A–6—AVERAGE ANNUAL ESTIMATES OF 0 TO 7 YEAR-OLD CRS RESTRAINED CHILDREN WITH AIS 2+ INJURIES IN REAR SEATING POSITIONS OF LIGHT PASSENGER VEHICLES INVOLVED IN MOTOR VEHICLE CRASHES BY CRASH MODE

[Weighted data NASS–CDS 2010–2014]

	Age (years)				
Crash mode	Under 1	1–2 YO	3 YO*	4–7 YO	Total
Rollover	0	0	0	172	172
Front	0	55	37	47	139
Side	30	14	10	1	55
Near-side	29	5	4	0	38
Far-side	1	9	6	1	17
Rear	1	7	5	73	86
Total	31	77	51	293	452

* NASS–CDS data have very few cases of restrained injured children. For this reason, the ages are grouped together. About 40% of AIS 2+ injuries among AIS 2+ 1–3 YO children are to 3-year-old children. Therefore, the number of 1–2 YO children injured is 128*0.6 = 77.

The information on whether children were restrained in RFCRS or FFCRS was not available in many cases in the NASS–CDS data files so this information was obtained from the National Child Restraint Use Survey System (NCRUSS) [145] as shown in Table A–7.[146]

TABLE A–7—TYPE OF CRS USED TO RESTRAIN CHILDREN IN NON-FATAL CRASHES

[NCRUSS]

	RFCRS percent	FFCRS percent	Booster percent	Seat belt percent
under 1YO	96	4	1	.....
1–2YO	11	86	2	1
3 YO	.....	76	22	2
4–7YO	.....	30	64	6

As before, 15 percent to 50 percent of caregivers were assumed would follow the manufacturer's instructions on CRS labels or the Users' manual regarding CRS use and would keep children weighing less than 12 kg (26.5 lb) in rear-facing CRSs. Using these assumptions along with the percentage effectiveness of RFCRSs over FFCRS and the 2010–2014 NASS–CDS data, the agency

[144] The Abbreviated Injury Scale is a 6-point ranking system used for ranking the severity of injuries. AIS2+ Injuries means injuries of severity level 2 (moderate), 3 (serious), 4 (severe), 5 (critical) according to the Abbreviate Injury Scale. *www.aaam.org.*

[145] National Child Restraint Use Special Study, DOT HS 811 679, *https://crashstats.nhtsa.dot.gov/Api/Public/ViewPublication/812142.* NCRUSS is a large-scale nationally-representative survey that involves both an inspection of the child passenger's restraint system by a certified child passenger safety technician and a detailed interview of the driver. The survey collected information on drivers and child passengers ages 0–8 years between June and August 2011.

[146] Tables C–5 and C–6 of DOT–HS–812142.

estimated that 1.0–3.5 AIS 2+ injuries could be prevented for children 0–2 YO (see Table A–8) by the proposed change in the manufacturer-recommended minimum child weight limit for forward-facing CRS use.

TABLE A–8—ESTIMATE OF INJURIES PREVENTED FROM THE PROPOSED INCREASE IN THE MANUFACTURER-RECOMMENDED MINIMUM CHILD WEIGHT FOR USE OF FORWARD-FACING CRSS FROM 9 kg TO 12 kg

	Age (years)	
	<1	1–2
Average Annual AIS 2+ injured children (a)	31	77
Percent in FFCRS (b)	4.0%	86.0%
Percent weight less than 12 kg (26.5 lb) (c)	99.8%	71.4%
Target Population (d) = (a)x(b)x(c)	1.2	47.3
Effectiveness of RFCRSs vs FFCRSs (e)	14.4%	14.4%
Percent people following label (f)	15%–50%	15%–50%
Benefits for 15% follow label (d)x(e)x0.15	0.0	1.0
Benefits for 50% follow label (d)x(e)x0.50	0.1	3.4

The agency estimates that the increase in the minimum child weight from 9 kg to 12 kg for FFCRS use could potentially save 0.7–2.3 lives and prevent 1.0–3.5 AIS 2+ injuries.

(2) Increasing Manufacturer-Recommended Minimum Child Weight for Booster Seat Use

Increasing the manufacturer-recommended minimum child weight for booster seat use from 13.6 kg to 18.2 kg (30 lb to 40 lb) would reduce premature graduation from forward-facing CRSs to booster seats. NHTSA determined that among 3- to 4-year-olds, there is a 27 percent increased risk of moderate to fatal injuries when restrained in booster seats compared to forward-facing CRSs.[147] The effectiveness of FFCRS over booster seats is likely reduced for older children who may be taller and have improved belt fit in a booster seat. So, for children 5—7 years of age, NHTSA assumed that there is a 10 percent increased risk of fatal injuries when restrained in booster seats compared to forward-facing CRSs. An average 3-year old weighs 13.6 kg (30 lb) and an average 4-year old weighs 16.1 kg (35.5 lb). Using the 2000 Center for Disease Control (CDC) Growth Charts, the agency determined the percentage of children weighing less than 18.2 kg (40 lb) for each age group (see Table A–9).

TABLE A–9. PERCENT OF CHILDREN WEIGHING LESS THAN 18.2 kg (40 lb) BY AGE OF CHILD

[2000 CDC growth charts]

	2 YO (percent)	3 YO (percent)	4 YO (percent)	5 YO (percent)	6 YO (percent)	7 YO (percent)
Percentile	100	100	82.5	50	20	4

To determine the lives saved by increasing the minimum child weight for booster seat use, the agency: (1) Used the fatality data in Table A–2, the percentage of children in booster seats in Table A–3, and the percentage of children weighing less than 18.2 kg (40 lb) in Table A–9; (2) made the same assumptions that 15 percent to 50 percent of caregivers would follow manufacturer's instructions in the CRS labels and/or Users' manual and keep children weighing less than 18.2 kg (40 lb) in CRSs with internal harnesses, and (3) followed a similar analysis method as in Table A–5. Based on this analysis, the agency estimates that 1.2- 4 lives could potentially be saved (see Table A–10) by raising the manufacturer-recommended minimum child weight for booster seat use from 13.6 kg to 18.2 kg (30 lb to 40 lb).

TABLE A–10—ESTIMATE OF LIVES SAVED FOR PROPOSED LABEL CHANGE INCREASING WEIGHT OF CHILDREN IN BOOSTER SEATS FROM 13.6 TO 18.2 kg

[30 to 40 lb]

	Age					
	2	3	4	5	6	7
Average Annual Fatalities (a)	25.2	27	21.8	17.6	12.2	7
Percent in booster seats (b)	19.7%	41.8%	58.5%	63.5%	76.9%	88.9%
Percent weight less than 18.2 kg (40 lb) (c)	100.0%	100.0%	82.5%	50.0%	20.0%	4.0%
Target Population (d) = (a)x(b)x(c)	5.0	11.3	10.5	5.6	1.9	0.2
Effectiveness of FFCRSs vs Boosters (e)	27.0%	27.0%	27.0%	10.0%	10.0%	10.0%
Percent people following label (f)	15%-50%	15%-50%	15%-50%	15%-50%	15%-50%	15%-50%
Benefits for 50% follow label (d)x(e)x0.15	0.2	0.5	0.4	0.1	0.0	0.0
Benefits for 15% follow label (d)x(e)x0.5	0.7	1.5	1.4	0.3	0.1	0.0

[147] DOT HS 811 338 July 2010—Booster seat effectiveness estimates based on CDS and State data.

Using the data in Table A–6 and Table A–7 and following the analysis as shown in Table A–10, the number of AIS 2+ injuries were estimated that could potentially be prevented by the proposed increase in the minimum child weight recommendation for booster seat use from 13.6 to 18.2 kg (30 to 40 lb). This analysis, shown in Table A–11, estimated that 1.6–5.2 AIS 2+ injuries could be prevented.

TABLE A–11—ESTIMATE OF INJURIES PREVENTED FOR PROPOSED INCREASE IN MANUFACTURER-RECOMMENDED MINIMUM CHILD WEIGHT FOR BOOSTER SEAT USE FROM 13.6 TO 18.2 kg

[30 to 40 lb]

	Age	
	1–3	4–7
Average Annual AIS 2+ injured children (a)	128	293
Percent in Boosters (b)	9.0%	64.0%
Percent weight less than 18.2 kg (40 lb) (c)	100.0%	39.1%
Target Population (d) = (a)×(b)×(c)	11.5	73.4
Effectiveness of FFCRSs vs. boosters (e)	27.0%	10.0%
Percent people following label (f)	15%–50%	15%–50%
Benefits for 70% follow label (d)×(e)×(f)	0.5	1.1
Benefits for 15% follow label (d)×(e)×0.15	1.6	3.7

The agency estimates that the increase in the minimum child weight for booster seat use from 13.6 kg to 18.2 kg (30 lb to 40 lb) could potentially save 1.2–4 lives and prevent 1.6–5.2 AIS 2+ injuries.

In summary, the proposed increase in the manufacturer-recommended minimum child weight for forward-facing CRS use and booster seat use could potential save 1.9 to 6.3 lives and prevent 2.6 to 8.7 AIS 2+ injuries.

Issued in Washington, DC, under authority delegated in 49 CFR 1.95 and 501.8.

James C. Owens,

Deputy Administrator.

[FR Doc. 2020–21477 Filed 10–30–20; 8:45 am]

BILLING CODE 4910–59–P

FEDERAL REGISTER

Vol. 85 Monday,

No. 212 November 2, 2020

Part III

The President

Notice of October 30, 2020—Continuation of the National Emergency With Respect to Sudan

Federal Register
Vol. 85, No. 212
Monday, November 2, 2020

Presidential Documents

Title 3—

The President

Notice of October 30, 2020

Continuation of the National Emergency With Respect to Sudan

On November 3, 1997, by Executive Order 13067, the President declared a national emergency with respect to Sudan pursuant to the International Emergency Economic Powers Act (50 U.S.C. 1701–1706) and took related steps to deal with the unusual and extraordinary threat to the national security and foreign policy of the United States posed by the actions and policies of the Government of Sudan. On April 26, 2006, by Executive Order 13400, the President determined that the conflict in Sudan's Darfur region posed an unusual and extraordinary threat to the national security and foreign policy of the United States, expanded the scope of the national emergency declared in Executive Order 13067, and ordered the blocking of property of certain persons connected to the Darfur region. On October 13, 2006, by Executive Order 13412, the President took additional steps with respect to the national emergency declared in Executive Order 13067 and expanded in Executive Order 13400. In Executive Order 13412, the President also took steps to implement the Darfur Peace and Accountability Act of 2006 (Public Law 109–344).

On January 13, 2017, by Executive Order 13761, the President found that positive efforts by the Government of Sudan between July 2016 and January 2017 improved certain conditions that Executive Orders 13067 and 13412 were intended to address. Given these developments, and in order to encourage the Government of Sudan to sustain and enhance these efforts, section 1 of Executive Order 13761 provided that sections 1 and 2 of Executive Order 13067 and the entirety of Executive Order 13412 would be revoked as of July 12, 2017, provided that the criteria in section 12(b) of Executive Order 13761 had been met.

On July 11, 2017, by Executive Order 13804, I amended Executive Order 13761, extending until October 12, 2017, the effective date in section 1 of Executive Order 13761. On October 12, 2017, pursuant to Executive Order 13761, as amended by Executive Order 13804, sections 1 and 2 of Executive Order 13067 and the entirety of Executive Order 13412 were revoked.

Despite recent positive developments, the crisis constituted by the actions and policies of the Government of Sudan that led to the declaration of a national emergency in Executive Order 13067 of November 3, 1997; the expansion of that emergency in Executive Order 13400 of April 26, 2006; and, with respect to which additional steps were taken in Executive Order 13412 of October 13, 2006, Executive Order 13761 of January 13, 2017, and Executive Order 13804 of July 11, 2017, has not been resolved. These actions and policies continue to pose an unusual and extraordinary threat to the national security and foreign policy of the United States. Therefore, I have determined that it is necessary to continue the national emergency declared in Executive Order 13067, as expanded by Executive Order 13400, with respect to Sudan.

This notice shall be published in the *Federal Register* and transmitted to the Congress.

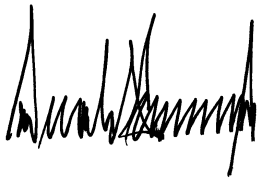

THE WHITE HOUSE,
October 30, 2020.

[FR Doc. 2020–24429
Filed 10–30–20; 11:15 am]
Billing code 3295–F1–P

Reader Aids

Federal Register

Vol. 85, No. 212

Monday, November 2, 2020

CUSTOMER SERVICE AND INFORMATION

Federal Register/Code of Federal Regulations	
General Information, indexes and other finding aids	**202–741–6000**
Laws	**741–6000**
Presidential Documents	
Executive orders and proclamations	**741–6000**
The United States Government Manual	**741–6000**
Other Services	
Electronic and on-line services (voice)	**741–6020**
Privacy Act Compilation	**741–6050**

ELECTRONIC RESEARCH

World Wide Web

Full text of the daily Federal Register, CFR and other publications is located at: **www.govinfo.gov.**

Federal Register information and research tools, including Public Inspection List and electronic text are located at: **www.federalregister.gov.**

E-mail

FEDREGTOC (Daily Federal Register Table of Contents Electronic Mailing List) is an open e-mail service that provides subscribers with a digital form of the Federal Register Table of Contents. The digital form of the Federal Register Table of Contents includes HTML and PDF links to the full text of each document.

To join or leave, go to **https://public.govdelivery.com/accounts/USGPOOFR/subscriber/new**, enter your email address, then follow the instructions to join, leave, or manage your subscription.

PENS (Public Law Electronic Notification Service) is an e-mail service that notifies subscribers of recently enacted laws.

To subscribe, go to **http://listserv.gsa.gov/archives/publaws-l.html and select** *Join or leave the list (or change settings);* then follow the instructions.

FEDREGTOC and **PENS** are mailing lists only. We cannot respond to specific inquiries.

Reference questions. Send questions and comments about the Federal Register system to: **fedreg.info@nara.gov**

The Federal Register staff cannot interpret specific documents or regulations.

FEDERAL REGISTER PAGES AND DATE, NOVEMBER

69119–69464 2

CFR PARTS AFFECTED DURING NOVEMBER

At the end of each month the Office of the Federal Register publishes separately a List of CFR Sections Affected (LSA), which lists parts and sections affected by documents published since the revision date of each title.

3 CFR

Administrative Orders:
Notices:
Notice of October 30, 2020 69463

8 CFR

Proposed Rules:
214.....69236

12 CFR

1003.....69119

13 CFR

124.....69120
125.....69120
129.....69120

14 CFR

39 .....69126, 69129, 69131, 69134, 69138, 69140, 69142, 69144
71.....69147, 69148
97.....69149, 69151
Proposed Rules:
27.....69265
39 .....69267, 69269, 69272, 69276
71.....69279, 69281

21 CFR

1301.....69153
1306.....69153
Proposed Rules:
1300.....69282
1301.....69282

29 CFR

1695.....69167

33 CFR

165.....69172
Proposed Rules:
165.....69299, 69301

36 CFR

1.....69175
4.....69175
Proposed Rules:
222.....69303

40 CFR

9.....69189
122.....69189
123.....69189
127.....69189
403.....69189
503.....69189
Proposed Rules:
152.....69307

43 CFR

8340.....69206

47 CFR

Proposed Rules:
73.....69311

49 CFR

Proposed Rules:
571.....69388

50 CFR

27.....69223

LIST OF PUBLIC LAWS

Note: No public bills which have become law were received by the Office of the Federal Register for inclusion in today's **List of Public Laws**.

Last List October 26, 2020

Public Laws Electronic Notification Service (PENS)

PENS is a free email notification service of newly enacted public laws. To subscribe, go to *https://listserv.gsa.gov/cgi-bin/wa.exe?SUBED1=PUBLAWS-L&A=1*

Note: This service is strictly for email notification of new laws. The text of laws is not available through this service. **PENS** cannot respond to specific inquiries sent to this address.

TABLE OF EFFECTIVE DATES AND TIME PERIODS—NOVEMBER 2020

This table is used by the Office of the Federal Register to compute certain dates, such as effective dates and comment deadlines, which appear in agency documents. In computing these dates, the day after publication is counted as the first day.

When a date falls on a weekend or holiday, the next Federal business day is used. (See 1 CFR 18.17)

A new table will be published in the first issue of each month.

Date of FR publication	15 days after publication	21 days after publication	30 days after publication	35 days after publication	45 days after publication	60 days after publication	90 days after publication
November 2	Nov 17	Nov 23	Dec 2	Dec 7	Dec 17	Jan 4	Feb 1
November 3	Nov 18	Nov 24	Dec 3	Dec 8	Dec 18	Jan 4	Feb 1
November 4	Nov 19	Nov 25	Dec 4	Dec 9	Dec 21	Jan 4	Feb 2
November 5	Nov 20	Nov 27	Dec 7	Dec 10	Dec 21	Jan 4	Feb 3
November 6	Nov 23	Nov 27	Dec 7	Dec 11	Dec 21	Jan 5	Feb 4
November 9	Nov 24	Nov 30	Dec 9	Dec 14	Dec 24	Jan 8	Feb 8
November 10	Nov 25	Dec 1	Dec 10	Dec 15	Dec 28	Jan 11	Feb 8
November 12	Nov 27	Dec 3	Dec 14	Dec 17	Dec 28	Jan 11	Feb 10
November 13	Nov 30	Dec 4	Dec 14	Dec 18	Dec 28	Jan 12	Feb 11
November 16	Dec 1	Dec 7	Dec 16	Dec 21	Dec 31	Jan 15	Feb 16
November 17	Dec 2	Dec 8	Dec 17	Dec 22	Jan 4	Jan 19	Feb 16
November 18	Dec 3	Dec 9	Dec 18	Dec 23	Jan 4	Jan 19	Feb 16
November 19	Dec 4	Dec 10	Dec 21	Dec 24	Jan 4	Jan 19	Feb 17
November 20	Dec 7	Dec 11	Dec 21	Dec 28	Jan 4	Jan 19	Feb 18
November 23	Dec 8	Dec 14	Dec 23	Dec 28	Jan 7	Jan 22	Feb 22
November 24	Dec 9	Dec 15	Dec 24	Dec 29	Jan 8	Jan 25	Feb 22
November 25	Dec 10	Dec 16	Dec 28	Dec 30	Jan 11	Jan 25	Feb 23
November 27	Dec 14	Dec 18	Dec 28	Jan 4	Jan 11	Jan 26	Feb 25
November 30	Dec 15	Dec 21	Dec 30	Jan 4	Jan 14	Jan 29	Mar 1