AUTHENTICATED
U.S. GOVERNMENT
INFORMATION
GPO

FEDERAL REGISTER

Vol. 85 Monday,
No. 207 October 26, 2020

Pages 67631–67964

OFFICE OF THE FEDERAL REGISTER

The **FEDERAL REGISTER** (ISSN 0097–6326) is published daily, Monday through Friday, except official holidays, by the Office of the Federal Register, National Archives and Records Administration, under the Federal Register Act (44 U.S.C. Ch. 15) and the regulations of the Administrative Committee of the Federal Register (1 CFR Ch. I). The Superintendent of Documents, U.S. Government Publishing Office, is the exclusive distributor of the official edition. Periodicals postage is paid at Washington, DC.

The **FEDERAL REGISTER** provides a uniform system for making available to the public regulations and legal notices issued by Federal agencies. These include Presidential proclamations and Executive Orders, Federal agency documents having general applicability and legal effect, documents required to be published by act of Congress, and other Federal agency documents of public interest.

Documents are on file for public inspection in the Office of the Federal Register the day before they are published, unless the issuing agency requests earlier filing. For a list of documents currently on file for public inspection, see *www.federalregister.gov.*

The seal of the National Archives and Records Administration authenticates the Federal Register as the official serial publication established under the Federal Register Act. Under 44 U.S.C. 1507, the contents of the **Federal Register** shall be judicially noticed.

The **Federal Register** is published in paper and on 24x microfiche. It is also available online at no charge at *www.govinfo.gov*, a service of the U.S. Government Publishing Office.

The online edition of the **Federal Register** is issued under the authority of the Administrative Committee of the Federal Register as the official legal equivalent of the paper and microfiche editions (44 U.S.C. 4101 and 1 CFR 5.10). It is updated by 6:00 a.m. each day the **Federal Register** is published and includes both text and graphics from Volume 1, 1 (March 14, 1936) forward. For more information, contact the GPO Customer Contact Center, U.S. Government Publishing Office. Phone 202-512-1800 or 866-512-1800 (toll free). E-mail, *gpocusthelp.com.*

The annual subscription price for the **Federal Register** paper edition is $860 plus postage, or $929, for a combined **Federal Register, Federal Register** Index and List of CFR Sections Affected (LSA) subscription; the microfiche edition of the **Federal Register** including the **Federal Register** Index and LSA is $330, plus postage. Six month subscriptions are available for one-half the annual rate. The prevailing postal rates will be applied to orders according to the delivery method requested. The price of a single copy of the daily **Federal Register,** including postage, is based on the number of pages: $11 for an issue containing less than 200 pages; $22 for an issue containing 200 to 400 pages; and $33 for an issue containing more than 400 pages. Single issues of the microfiche edition may be purchased for $3 per copy, including postage. Remit check or money order, made payable to the Superintendent of Documents, or charge to your GPO Deposit Account, VISA, MasterCard, American Express, or Discover. Mail to: U.S. Government Publishing Office—New Orders, P.O. Box 979050, St. Louis, MO 63197-9000; or call toll free 1-866-512-1800, DC area 202-512-1800; or go to the U.S. Government Online Bookstore site, see *bookstore.gpo.gov.*

There are no restrictions on the republication of material appearing in the **Federal Register.**

How To Cite This Publication: Use the volume number and the page number. Example: 85 FR 12345.

Postmaster: Send address changes to the Superintendent of Documents, Federal Register, U.S. Government Publishing Office, Washington, DC 20402, along with the entire mailing label from the last issue received.

SUBSCRIPTIONS AND COPIES

PUBLIC

Subscriptions:

Paper or fiche	**202–512–1800**
Assistance with public subscriptions	**202–512–1806**
General online information	**202–512–1530; 1–888–293–6498**

Single copies/back copies:

Paper or fiche	**202–512–1800**
Assistance with public single copies	**1–866–512–1800 (Toll-Free)**

FEDERAL AGENCIES

Subscriptions:

Assistance with Federal agency subscriptions:

Email	*FRSubscriptions@nara.gov*
Phone	**202–741–6000**

The Federal Register Printing Savings Act of 2017 (Pub. L. 115-120) placed restrictions on distribution of official printed copies of the daily **Federal Register** to members of Congress and Federal offices. Under this Act, the Director of the Government Publishing Office may not provide printed copies of the daily **Federal Register** unless a Member or other Federal office requests a specific issue or a subscription to the print edition. For more information on how to subscribe use the following website link: *https://www.gpo.gov/frsubs.*

Printed on recycled paper.

Contents

Federal Register

Vol. 85, No. 207

Monday, October 26, 2020

Agency for Healthcare Research and Quality
NOTICES
Meetings:
National Advisory Council for Healthcare Research and Quality, 67743

Agriculture Department
See Animal and Plant Health Inspection Service
See Commodity Credit Corporation
See Foreign Agricultural Service

Animal and Plant Health Inspection Service
NOTICES
Assessment:
Newcastle Disease Status of the Cantons of Neuchatel and Ticino of Switzerland, 67705

Bureau of Consumer Financial Protection
RULES
Qualified Mortgage Definition under the Truth in Lending Act (Regulation Z):
Extension of Sunset Date, 67938–67960

Census Bureau
NOTICES
Agency Information Collection Activities; Proposals, Submissions, and Approvals:
Current Population Survey, Annual Social and Economic Survey, 67708–67709

Centers for Disease Control and Prevention
NOTICES
Meetings, 67743–67744

Chemical Safety and Hazard Investigation Board
NOTICES
Meetings; Sunshine Act, 67707–67708

Civil Rights Commission
NOTICES
Meetings:
Missouri Advisory Committee, 67708

Commerce Department
See Census Bureau
See Foreign-Trade Zones Board
See International Trade Administration
See National Oceanic and Atmospheric Administration

Commodity Credit Corporation
RULES
Environmental Quality Incentives Program, 67637–67648

Commodity Futures Trading Commission
NOTICES
Agency Information Collection Activities; Proposals, Submissions, and Approvals, 67720–67721, 67723
Agency Information Collection Activities; Proposals, Submissions, and Approvals:
Off-Exchange Foreign Currency Transactions, 67721–67723

Consumer Product Safety Commission
PROPOSED RULES
Safety Standard for Crib Mattresses, 67906–67936

Defense Department
NOTICES
Agency Information Collection Activities; Proposals, Submissions, and Approvals:
Payment by Electronic Fund Transfer—Other than System for Award Management, 67742–67743

Education Department
NOTICES
Agency Information Collection Activities; Proposals, Submissions, and Approvals:
Parent Loan for Undergraduate Students Adverse Credit Reconsideration Loan Counseling, 67724

Employment and Training Administration
NOTICES
Agency Information Collection Activities; Proposals, Submissions, and Approvals:
Contribution Operations, 67776–67777
Trade Adjustment Assistance; Determinations, 67771–67775, 67777–67778
Worker Adjustment Assistance; Investigations, 67775–67776

Energy Department
See Federal Energy Regulatory Commission

Environmental Protection Agency
RULES
Air Quality State Implementation Plans; Approvals and Promulgations:
New Hampshire; Infrastructure State Implementation Plan Requirements for the 2015 Ozone and 2012 $PM_{2.5}$ Standard, 67651–67653
South Dakota; Infrastructure Requirements for the 2015 Ozone National Ambient Air Quality Standards; Revisions to Administrative Rules, 67653–67660
West Virginia; Redesignation of the Marshall Sulfur Dioxide Nonattainment Area to Attainment and Approval of the Area's Maintenance Plan, 67661–67665
National Emission Standards for Hazardous Air Pollutants:
Petroleum Refinery Sector; Action Denying a Petition for Reconsideration, 67665–67666
PROPOSED RULES
Vessel Incidental Discharge National Standards of Performance, 67818–67903
NOTICES
Access by Contractors to Information Claimed as Confidential Business Information Submitted under the Clean Air Act and Related Regulations, 67738–67739
Meetings:
Farm, Ranch, and Rural Communities Advisory Committee, 67737–67738

Federal Aviation Administration
RULES
Airspace Designations and Reporting Points:
Vicinity of New Hope, KY, 67649–67651

Vicinity of Texoma, OK, 67648–67649
PROPOSED RULES
Airworthiness Directives:
Airbus Helicopters Deutschland GmbH Helicopters, 67694–67696
Airbus SAS Airplanes, 67696–67699
Sikorsky Aircraft and Sikorsky Aircraft Corporation Helicopters, 67692–67694
NOTICES
Environmental Assessments; Availability, etc.:
South-Central Florida Metroplex Project; Finding of No Significant Impact and the Record of Decision, 67811

Federal Deposit Insurance Corporation
PROPOSED RULES
Removal of Transferred Office of Thrift Supervision Regulations Regarding Certain Subordinate Organizations of State Savings Associations, 67684–67691

Federal Emergency Management Agency
NOTICES
Emergency and Related Determinations:
Alabama, 67765
Florida, 67763
Louisiana, 67762
Mississippi, 67762–67763
Oregon, 67754–67755
Emergency Declaration:
Louisiana; Amendment 1, 67765
Mississippi; Amendment No. 1, 67753
Final Flood Hazard Determinations, 67760–67761
Flood Hazard Determinations; Changes, 67756–67758
Flood Hazard Determinations; Proposals, 67758–67759
Major Disaster and Related Determinations:
Florida, 67753–67754
Major Disaster Declaration:
Alabama, 67763–67764
Alabama; Amendment No. 1, 67759–67760
California; Amendment No. 5, 67755
California; Amendment No. 6, 67755–67756
Florida; Amendment No. 1, 67759
Florida; Amendment No. 2, 67764
Iowa; Amendment No. 4, 67754
Louisiana; Amendment No. 11, 67764–67765
New York; Amendment No. 1, 67766
Oregon; Amendment No. 1, 67755

Federal Energy Regulatory Commission
PROPOSED RULES
Fuel Cell Thermal Energy Output:
Bloom Energy Corp., 67699–67704
NOTICES
Agency Information Collection Activities; Proposals, Submissions, and Approvals, 67732–67733
Application and Establishing an Intervention Deadline:
Golden Pass Pipeline, LLC, 67724–67726
Application:
Brookfield White Pine Hydro, LLC; Merimil, LP; Eagle Creek Kennebec Hydro, LLC, 67728–67729
City of Hamilton and American Municipal Power, Inc., 67736–67737
Northern States Power Co., 67730–67731
Combined Filings, 67724, 67726–67727, 67729–67730, 67736
Complaint:
North Carolina Electric Membership Corporation v. Duke Energy Progress, LLC, 67727–67728
Environmental Impact Statements; Availability, etc.:
LA Storage, LLC, 67733–67736
Initial Market-Based Rate Filings Including Requests for Blanket Section 204 Authorizations:
Flat Ridge 3 Wind Energy, LLC, 67732
HDSI, LLC, 67731–67732
XO Energy CAL, LP, 67729

Federal Maritime Commission
NOTICES
Agency Information Collection Activities; Proposals, Submissions, and Approvals, 67739–67740

Federal Mediation and Conciliation Service
NOTICES
Privacy Act; System of Records, 67740–67742

Federal Railroad Administration
NOTICES
Charter Renewal:
Railroad Safety Advisory Committee, 67811–67812

Fish and Wildlife Service
NOTICES
Environmental Assessments; Availability, etc.:
Tumwater East Distribution Center and Tumwater West Conservation Site, Thurston County, WA; Proposed Habitat Conservation Plan, 67767–67768

Food and Drug Administration
NOTICES
Pilot Program:
Alignment of Third-Party Food Safety Standards with Food Safety Regulations, 67744–67746

Foreign Agricultural Service
NOTICES
Adjustment of Appendices:
Dairy Tariff-Rate Quota Import Licensing Regulation for the 2020 Tariff–Rate Quota Year, 67706–67707

Foreign-Trade Zones Board
NOTICES
Proposed Production Activity:
Coating Place, Inc., Foreign-Trade Zone 266, Dane County, Wisconsin, 67709

General Services Administration
NOTICES
Agency Information Collection Activities; Proposals, Submissions, and Approvals:
Payment by Electronic Fund Transfer—Other than System for Award Management, 67742–67743

Health and Human Services Department
See Agency for Healthcare Research and Quality
See Centers for Disease Control and Prevention
See Food and Drug Administration
See National Institutes of Health
NOTICES
Meetings:
National Committee on Vital and Health Statistics, 67746–67747

Homeland Security Department
See Federal Emergency Management Agency
See Transportation Security Administration
See U.S. Customs and Border Protection

Housing and Urban Development Department
NOTICES
Meetings:
Manufactured Housing Consensus Committee, 67766–67767

Interior Department
See Fish and Wildlife Service
See Land Management Bureau
RULES
Procedures for Issuing Guidance Documents, 67666–67670

International Trade Administration
NOTICES
Antidumping or Countervailing Duty Investigations, Orders, or Reviews:
Chlorinated Isocyanurates from the People's Republic of China, 67709–67711
Determination of Sales At Less Than Fair Value:
Certain Aluminum Foil from the Republic of Armenia, Brazil, the Sultanate of Oman, the Russian Federation, and the Republic of Turkey, 67711–67717

Justice Department
NOTICES
Agency Information Collection Activities; Proposals, Submissions, and Approvals, 67769–67770
Agency Information Collection Activities; Proposals, Submissions, and Approvals:
Generic Clearance for Cognitive, Pilot, and Field Studies for Office of Juvenile Justice and Delinquency Prevention, 67768–67769

Labor Department
See Employment and Training Administration
NOTICES
Agency Information Collection Activities; Proposals, Submissions, and Approvals:
Apprenticeship Evidence-Building Portfolio Evaluation, 67778–67779
Requirements for Occupational Safety and Health Administration Training Institute Education Centers Program and Occupational Safety and Health Administration Outreach, 67778

Land Management Bureau
RULES
Non-Energy Solid Leasable Minerals Royalty Rate Reduction Process, 67671–67681

National Aeronautics and Space Administration
NOTICES
Agency Information Collection Activities; Proposals, Submissions, and Approvals:
Payment by Electronic Fund Transfer—Other than System for Award Management, 67742–67743

National Archives and Records Administration
NOTICES
Agency Information Collection Activities; Proposals, Submissions, and Approvals, 67779–67780

National Credit Union Administration
NOTICES
Meetings; Sunshine Act, 67780

National Highway Traffic Safety Administration
NOTICES
Denial of Petition for Decision of Inconsequential Noncompliance:
Daimler Trucks North America, 67812–67814

National Institutes of Health
NOTICES
Agency Information Collection Activities; Proposals, Submissions, and Approvals:
Grant and Contract Data that May Be of Interest to Historically Black Colleges and Universities and Small Businesses, 67749–67750
Identifying Experts in Prevention Science Methods to Include on NIH Review Panels, 67750–67751
Meetings:
Center for Scientific Review, 67747–67748
National Cancer Institute, 67748–67749
National Institute Of General Medical Sciences, 67749
National Institute on Aging, 67751
National Library of Medicine, 67747, 67749
Sexual and Gender Minority Research Listening Session, 67748

National Labor Relations Board
PROPOSED RULES
Representation-Case Procedures:
Voter List Contact Information; Absentee Ballots for Employees on Military Leave, 67704

National Oceanic and Atmospheric Administration
RULES
Fisheries of the Northeastern United States:
Atlantic Bluefish Fishery; Quota Transfer from Virginia to North Carolina, 67683
NOTICES
Agency Information Collection Activities; Proposals, Submissions, and Approvals:
Prohibited Species Donation Program, 67718–67719
West Coast Region Vessel Identification Requirements, 67719
Meetings:
Fisheries of the South Atlantic; Southeast Data, Assessment, and Review, 67717–67718
Mid-Atlantic Fishery Management Council, 67718
New England Fishery Management Council, 67720
South Atlantic Fishery Management Council, 67718

Nuclear Regulatory Commission
NOTICES
Meetings; Sunshine Act, 67780
Post-Shutdown Decommissioning Activities Report:
NextEra Energy Duane Arnold, LLC, Duane Arnold Energy Center, 67780–67781

Presidential Documents
EXECUTIVE ORDERS
Government Agencies and Employees:
Excepted Service, Schedule F; Establishment (EO 13957), 67631–67635
ADMINISTRATIVE ORDERS
Congo, Democratic Republic of the; Continuation of National Emergency (Notice of October 23, 2020), 67961–67963

Securities and Exchange Commission
NOTICES
Application:
Primark Private Equity Investments Fund and Primark Advisors, LLC, 67791–67794
Meetings; Sunshine Act, 67806
Self-Regulatory Organizations; Proposed Rule Changes:
Cboe BYX Exchange, Inc., 67802–67804
Cboe BZX Exchange, Inc., 67789–67791
Cboe EDGX Exchange, Inc., 67787–67789, 67806–67809
Cboe Exchange, Inc., 67782–67787, 67804–67806
Financial Industry Regulatory Authority, Inc., 67794–67802
Nasdaq PHLX LLC, 67781–67782

Selective Service System
NOTICES
Agency Information Collection Activities; Proposals, Submissions, and Approvals:
Forms Submitted to the Office of Management and Budget for Extension of Clearance, 67809

Small Business Administration
NOTICES
Agency Information Collection Activities; Proposals, Submissions, and Approvals, 67809–67810

State Department
NOTICES
Agency Information Collection Activities; Proposals, Submissions, and Approvals:
Certificate of Eligibility for Exchange Visitor Status (J–NONIMMIGRANT), 67810–67811

Transportation Department
See Federal Aviation Administration
See Federal Railroad Administration
See National Highway Traffic Safety Administration

Transportation Security Administration
RULES
Security Training for Surface Transportation Employees: Compliance Dates; Amendment, 67681–67683

U.S. Customs and Border Protection
NOTICES
Agency Information Collection Activities; Proposals, Submissions, and Approvals:
Crew Member's Declaration, 67752–67753
Documents Required Aboard Private Aircraft, 67752

Veterans Affairs Department
NOTICES
Privacy Act; Matching Programs, 67814–67815

Separate Parts In This Issue

Part II
Environmental Protection Agency, 67818–67903

Part III
Consumer Product Safety Commission, 67906–67936

Part IV
Bureau of Consumer Financial Protection, 67938–67960

Part V
Presidential Documents, 67961–67963

Reader Aids

Consult the Reader Aids section at the end of this issue for phone numbers, online resources, finding aids, and notice of recently enacted public laws.

To subscribe to the Federal Register Table of Contents electronic mailing list, go to https://public.govdelivery.com/accounts/USGPOOFR/subscriber/new, enter your e-mail address, then follow the instructions to join, leave, or manage your subscription.

CFR PARTS AFFECTED IN THIS ISSUE

A cumulative list of the parts affected this month can be found in the Reader Aids section at the end of this issue.

3 CFR

Executive Orders:

13957 67631

Administrative Orders:

Notices:

Notice of October 23, 2020 67963

7 CFR

1466 67637

12 CFR

1026 67938

Proposed Rules:

362 67684

390 67684

14 CFR

71 (2 documents) 67648, 67649

Proposed Rules:

39 (3 documents) 67692, 67694, 67696

16 CFR

Proposed Rules:

1112 67906

1130 67906

1241 67906

18 CFR

Proposed Rules:

292 67699

29 CFR

Proposed Rules:

102 67704

40 CFR

52 (3 documents) 67651, 67653, 67661

63 67665

81 67661

Proposed Rules:

139 67818

43 CFR

51 67666

3500 67671

49 CFR

1570 67681

50 CFR

648 67683

Federal Register
Vol. 85, No. 207
Monday, October 26, 2020

Presidential Documents

Title 3—

The President

Executive Order 13957 of October 21, 2020

Creating Schedule F in the Excepted Service

By the authority vested in me as President by the Constitution and the laws of the United States of America, including sections 3301, 3302, and 7511 of title 5, United States Code, it is hereby ordered as follows:

Section 1. *Policy.* To effectively carry out the broad array of activities assigned to the executive branch under law, the President and his appointees must rely on men and women in the Federal service employed in positions of a confidential, policy-determining, policy-making, or policy-advocating character. Faithful execution of the law requires that the President have appropriate management oversight regarding this select cadre of professionals.

The Federal Government benefits from career professionals in positions that are not normally subject to change as a result of a Presidential transition but who discharge significant duties and exercise significant discretion in formulating and implementing executive branch policy and programs under the laws of the United States. The heads of executive departments and agencies (agencies) and the American people also entrust these career professionals with non-public information that must be kept confidential.

With the exception of attorneys in the Federal service who are appointed pursuant to Schedule A of the excepted service and members of the Senior Executive Service, appointments to these positions are generally made through the competitive service. Given the importance of the functions they discharge, employees in such positions must display appropriate temperament, acumen, impartiality, and sound judgment.

Due to these requirements, agencies should have a greater degree of appointment flexibility with respect to these employees than is afforded by the existing competitive service process.

Further, effective performance management of employees in confidential, policy-determining, policy-making, or policy-advocating positions is of the utmost importance. Unfortunately, the Government's current performance management is inadequate, as recognized by Federal workers themselves. For instance, the 2016 Merit Principles Survey reveals that less than a quarter of Federal employees believe their agency addresses poor performers effectively.

Separating employees who cannot or will not meet required performance standards is important, and it is particularly important with regard to employees in confidential, policy-determining, policy-making, or policy-advocating positions. High performance by such employees can meaningfully enhance agency operations, while poor performance can significantly hinder them. Senior agency officials report that poor performance by career employees in policy-relevant positions has resulted in long delays and substandard-quality work for important agency projects, such as drafting and issuing regulations.

Pursuant to my authority under section 3302(1) of title 5, United States Code, I find that conditions of good administration make necessary an exception to the competitive hiring rules and examinations for career positions in the Federal service of a confidential, policy-determining, policy-making, or policy-advocating character. These conditions include the need to provide agency heads with additional flexibility to assess prospective appointees without the limitations imposed by competitive service selection procedures.

Placing these positions in the excepted service will mitigate undue limitations on their selection. This action will also give agencies greater ability and discretion to assess critical qualities in applicants to fill these positions, such as work ethic, judgment, and ability to meet the particular needs of the agency. These are all qualities individuals should have before wielding the authority inherent in their prospective positions, and agencies should be able to assess candidates without proceeding through complicated and elaborate competitive service processes or rating procedures that do not necessarily reflect their particular needs.

Conditions of good administration similarly make necessary excepting such positions from the adverse action procedures set forth in chapter 75 of title 5, United States Code. Chapter 75 of title 5, United States Code, requires agencies to comply with extensive procedures before taking adverse action against an employee. These requirements can make removing poorly performing employees difficult. Only a quarter of Federal supervisors are confident that they could remove a poor performer. Career employees in confidential, policy-determining, policy-making, and policy-advocating positions wield significant influence over Government operations and effectiveness. Agencies need the flexibility to expeditiously remove poorly performing employees from these positions without facing extensive delays or litigation.

Sec. 2. *Definition.* The phrase ''normally subject to change as a result of a Presidential transition'' refers to positions whose occupants are, as a matter of practice, expected to resign upon a Presidential transition and includes all positions whose appointment requires the assent of the White House Office of Presidential Personnel.

Sec. 3. *Excepted Service.* Appointments of individuals to positions of a confidential, policy-determining, policy-making, or policy-advocating character that are not normally subject to change as a result of a Presidential transition shall be made under Schedule F of the excepted service, as established by section 4 of this order.

Sec. 4. *Schedule F of the Excepted Service.* (a) Civil Service Rule VI is amended as follows:

(i) 5 CFR 6.2 is amended to read:

''OPM shall list positions that it excepts from the competitive service in Schedules A, B, C, D, E, and F, which schedules shall constitute parts of this rule, as follows:

Schedule A. Positions other than those of a confidential or policy-determining character for which it is not practicable to examine shall be listed in Schedule A.

Schedule B. Positions other than those of a confidential or policy-determining character for which it is not practicable to hold a competitive examination shall be listed in Schedule B. Appointments to these positions shall be subject to such noncompetitive examination as may be prescribed by OPM.

Schedule C. Positions of a confidential or policy-determining character normally subject to change as a result of a Presidential transition shall be listed in Schedule C.

Schedule D. Positions other than those of a confidential or policy-determining character for which the competitive service requirements make impracticable the adequate recruitment of sufficient numbers of students attending qualifying educational institutions or individuals who have recently completed qualifying educational programs. These positions, which are temporarily placed in the excepted service to enable more effective recruitment from all segments of society by using means of recruiting and assessing candidates that diverge from the rules generally applicable to the competitive service, shall be listed in Schedule D.

Schedule E. Position of administrative law judge appointed under 5 U.S.C. 3105. Conditions of good administration warrant that the position

of administrative law judge be placed in the excepted service and that appointment to this position not be subject to the requirements of 5 CFR, part 302, including examination and rating requirements, though each agency shall follow the principle of veteran preference as far as administratively feasible.

Schedule F. Positions of a confidential, policy-determining, policy-making, or policy-advocating character not normally subject to change as a result of a Presidential transition shall be listed in Schedule F. In appointing an individual to a position in Schedule F, each agency shall follow the principle of veteran preference as far as administratively feasible.''

(ii) 5 CFR 6.4 is amended to read:

''Except as required by statute, the Civil Service Rules and Regulations shall not apply to removals from positions listed in Schedules A, C, D, E, or F, or from positions excepted from the competitive service by statute. The Civil Service Rules and Regulations shall apply to removals from positions listed in Schedule B of persons who have competitive status.''

(b) The Director of the Office of Personnel Management (Director) shall:

(i) adopt such regulations as the Director determines may be necessary to implement this order, including, as appropriate, amendments to or rescissions of regulations that are inconsistent with, or that would impede the implementation of, this order, giving particular attention to 5 CFR, part 212, subpart D; 5 CFR, part 213, subparts A and C; and 5 CFR 302.101; and

(ii) provide guidance on conducting a swift, orderly transition from existing appointment processes to the Schedule F process established by this order.

Sec. 5. *Agency Actions.* (a) Each head of an executive agency (as defined in section 105 of title 5, United States Code, but excluding the Government Accountability Office) shall conduct, within 90 days of the date of this order, a preliminary review of agency positions covered by subchapter II of chapter 75 of title 5, United States Code, and shall conduct a complete review of such positions within 210 days of the date of this order. Thereafter, each agency head shall conduct a review of agency positions covered by subchapter II of chapter 75 of title 5, United States Code, on at least an annual basis. Following such reviews each agency head shall:

(i) for positions not excepted from the competitive service by statute, petition the Director to place in Schedule F any such competitive service, Schedule A, Schedule B, or Schedule D positions within the agency that the agency head determines to be of a confidential, policy-determining, policy-making, or policy-advocating character and that are not normally subject to change as a result of a Presidential transition. Any such petition shall include a written explanation documenting the basis for the agency head's determination that such position should be placed in Schedule F; and

(ii) for positions excepted from the competitive service by statute, determine which such positions are of a confidential, policy-determining, policy-making, or policy-advocating character and are not normally subject to change as a result of a Presidential transition. The agency head shall publish this determination in the *Federal Register*. Such positions shall be considered Schedule F positions for the purposes of agency actions under sections 5(d) and 6 of this order.

(b) The requirements set forth in subsection (a) of this section shall apply to currently existing positions and newly created positions.

(c) When conducting the review required by subsection (a) of this section, each agency head should give particular consideration to the appropriateness of either petitioning the Director to place in Schedule F or including in the determination published in the *Federal Register*, as applicable, positions whose duties include the following:

(i) substantive participation in the advocacy for or development or formulation of policy, especially:

(A) substantive participation in the development or drafting of regulations and guidance; or

(B) substantive policy-related work in an agency or agency component that primarily focuses on policy;

(ii) the supervision of attorneys;

(iii) substantial discretion to determine the manner in which the agency exercises functions committed to the agency by law;

(iv) viewing, circulating, or otherwise working with proposed regulations, guidance, executive orders, or other non-public policy proposals or deliberations generally covered by deliberative process privilege and either:

(A) directly reporting to or regularly working with an individual appointed by either the President or an agency head who is paid at a rate not less than that earned by employees at Grade 13 of the General Schedule; or

(B) working in the agency or agency component executive secretariat (or equivalent); or

(v) conducting, on the agency's behalf, collective bargaining negotiations under chapter 71 of title 5, United States Code.

(d) The Director shall promptly determine whether to grant any petition under subsection (a) of this section. Not later than December 31 of each year, the Director shall report to the President, through the Director of the Office of Management and Budget and the Assistant to the President for Domestic Policy, concerning the number of petitions granted and denied for that year for each agency.

(e) Each agency head shall, as necessary and appropriate, expeditiously petition the Federal Labor Relations Authority to determine whether any Schedule F position must be excluded from a collective bargaining unit under section 7112(b) of title 5, United States Code, paying particular attention to the question of whether incumbents in such positions are required or authorized to formulate, determine, or influence the policies of the agency.

Sec. 6. *Prohibited Personnel Practices Prohibited.* Agencies shall establish rules to prohibit the same personnel practices prohibited by section 2302(b) of title 5, United States Code, with respect to any employee or applicant for employment in Schedule F of the excepted service.

Sec. 7. *General Provisions.* (a) Nothing in this order shall be construed to impair or otherwise affect:

(i) the authority granted by law to an executive department or agency, or the head thereof; or

(ii) the functions of the Director of the Office of Management and Budget relating to budgetary, administrative, or legislative proposals.

(b) This order shall be implemented consistent with applicable law and subject to the availability of appropriations.

(c) This order is not intended to, and does not, create any right or benefit, substantive or procedural, enforceable at law or in equity by any party against the United States, its departments, agencies, or entities, its officers, employees, or agents, or any other person.

(d) If any provision of this order, or the application of any provision to any person or circumstances, is held to be invalid, the remainder of this order and the application of any of its other provisions to any other persons or circumstances shall not be affected thereby.

(e) Nothing in this order shall be construed to limit or narrow the positions that are or may be listed in Schedule C.

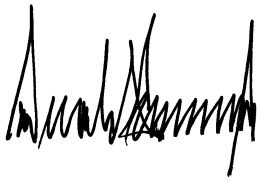

THE WHITE HOUSE,
October 21, 2020.

[FR Doc. 2020–23780
Filed 10–23–20; 8:45 am]
Billing code 3295–F1–P

Rules and Regulations

Federal Register
Vol. 85, No. 207
Monday, October 26, 2020

This section of the FEDERAL REGISTER contains regulatory documents having general applicability and legal effect, most of which are keyed to and codified in the Code of Federal Regulations, which is published under 50 titles pursuant to 44 U.S.C. 1510.

The Code of Federal Regulations is sold by the Superintendent of Documents.

DEPARTMENT OF AGRICULTURE

Commodity Credit Corporation

7 CFR Part 1466

[Docket ID NRCS–2019–0009]

RIN 0578–AA68

Environmental Quality Incentives Program

AGENCY: Natural Resources Conservation Service (NRCS) and the Commodity Credit Corporation (CCC), United States Department of Agriculture (USDA).

ACTION: Final rule.

SUMMARY: This final rule adopts, with minor changes, an interim rule published in the **Federal Register** on December 17, 2019, that made changes to the NRCS's Environmental Quality Incentives Program (EQIP). The changes were made to be consistent with the Agriculture Improvement Act of 2018 (the 2018 Farm Bill) and implemented administrative improvements and clarifications. NRCS received input from 197 commenters who provided 598 comments in response to the interim rule. This final rule makes permanent those changes appearing in the interim rule, responds to comments, and makes further adjustments in response to some of the comments received.

DATES: *Effective:* October 26, 2020.

FOR FURTHER INFORMATION CONTACT: Michael Whitt; phone: (202) 690–2267; or email: *michael.whitt@usda.gov.* Persons with disabilities who require alternative means for communication should contact the USDA Target Center at (202) 720–2600 (voice).

SUPPLEMENTARY INFORMATION:

Background

On December 17, 2019, NRCS published an interim rule with request for comments in the **Federal Register** (84 FR 69272–69293) to implement mandatory changes made by the 2018 Farm Bill and administrative improvements and clarifications. This final rule adopts, with minor changes, the amendments made by the interim rule. These changes are in response to public comment as explained in the summary of EQIP comments below.

Discussion of EQIP (7 CFR Part 1466)

Through EQIP, NRCS incentivizes agricultural producers to conserve and enhance soil, water, air, plants, animals (including wildlife), energy, and related natural resources on their land. EQIP promotes agricultural production, forest management, and environmental quality as compatible goals, and optimizes environmental benefits by assisting producers in addressing resource concerns on their operations. EQIP also helps agricultural producers meet Federal, State, and local environmental requirements and avoid the need for new requirements.

Eligible lands include cropland, grassland, rangeland, pasture, wetlands, nonindustrial private forest land, and other land on which agricultural or forest-related products or livestock are produced and natural resource concerns may be addressed. Participation in EQIP is voluntary.

The Secretary of Agriculture delegated authority to the Chief, NRCS, to administer EQIP on behalf of CCC.

The interim rule:

- Incorporated the addition of new or expected resource concerns to EQIP program purposes, adapting to and mitigating against increasing weather volatility, and drought resiliency measures.
- Amended how EQIP interacts with the Regional Conservation Partnership Program (RCPP) since RCPP is now a stand-alone program.
- Amended some definitions and added others to address changes made by the 2018 Farm Bill, including—
  - Animal feeding operation (AFO);
  - Eligible land;
  - Estimated income foregone;
  - Forest management plan;
  - High priority area;
  - Incentive practice;
  - Priority resource concern;
  - Semipublic;
  - Soil remediation;
  - Soil testing; and
  - Water management entity (WME).
- Added ''increased weather volatility'' as a resource concern under the national priorities identified in the regulation.
- Added to outreach responsibilities the requirement to notify historically underserved producers about the availability to elect to receive advance payments.
- Addressed EQIP contract provisions associated with WMEs and certain water conservation projects.
- Removed the requirement that a participant must implement and develop a comprehensive nutrient management plan (CNMP) by the end of the contract and replaced it with the following: Any conservation practices in the EQIP plan of operation must be implemented consistent with a CNMP.
- Incorporated the ability to waive the $450,000 regulatory contract limitation and establish a $900,000 regulatory contract limitation for certain projects with joint operations, group projects, or contracts where NRCS has waived the payment limitation for a WME.
- Increased payment rates for certain high-priority practices and increased payment rates for practices that address source water protection.
- Updated the statutory payment limitations for general EQIP contracts and contracts entered into under the National Organic Initiative.
- Clarified provisions related to contract administration, including procedures for contract modification and termination.
- Relocated provisions related to administration of Conservation Innovation Grants (CIGs) to its own subpart and incorporated the addition of On-farm Conservation Innovation Trials (On-farm Trial), which include the Soil Health Demonstration (SHD) Trial.
- Added a new subpart to address EQIP incentive contracts, which are a new enrollment option created by section 2304 of the 2018 Farm Bill.
- Relocated the General Administration provisions from subpart C to a new subpart E and updated language addressing environmental markets to reflect changes made by the 2018 Farm Bill.

Summary of EQIP Comments

The interim rule had a 60-day comment period ending February 18, 2020. NRCS received 598 comments from 197 commenters in response to the rule. In addition, one organization submitted a spreadsheet with 12,852 comments. NRCS reviewed these comments and categorized and

summarized them according to the topics identified below. The topics that generated the greatest response include conservation practices, contract limits, and national priorities.

In this rule, the comments have been organized in alphabetic order by topic. The topics include:

- Administration;
- Advance payments;
- Applicability;
- CIG—On-farm Trials, Other, and SHD Trials;
- Conservation Practices—High Priority Practices, Incentive Practices, Other, Prairie Pothole Wildlife Practice, Soil Health, and Source Water Protection;
- Contract Administration;
- Contract Limits Unrelated to WMEs;
- Contract Requirements;
- Contracts with WMEs—Adjusted Gross Income (AGI) and Payment Limitation Waiver, Land Eligibility Criteria, and Other;
- Definitions—Eligible Land, High Priority Area, Priority Resource Concern, Soil Testing, and WMEs;
- Eligibility;
- Environmental Assessment;
- EQIP Plan of Operations—Comprehensive Nutrient Management Plan;
- Fund Allocations;
- General;
- Incentive Contracts—Selection Criteria;
- National Priorities;
- Outreach Activities;
- Payment Limits;
- Payment Rates; and
- Ranking.

Of the 598 comments raised by the 197 commenters, 47 were general in nature and most expressed support for EQIP or how EQIP has benefitted particular operations. NRCS also received 21 comments that were not relevant to the EQIP interim rule. Seven comments criticized the regulation for not strengthening EQIP's impact on climate resilience or soil health. Six comments requested NRCS technical assistance for existing and potential projects. Several of these comments conveyed frustration with the process or specific working relationships. NRCS is committed to providing the highest quality service to its customers and partners, and these comments have been forwarded to the appropriate staff.

In general, comments focusing on topics that were outside the scope of the regulation will not be addressed. In response to the request that public comment be submitted through email, NRCS reminds the public that all comments should be submitted to the agency dockets on *Regulations.gov* and any comments that are received by another method will be posted on *regulations.gov* for public access to all of the comments in one place. In following the rulemaking process, NRCS seeks to provide equal consideration to all who wish to provide feedback. Submission of public comment through *Regulations.gov* provides a more equitable and reliable system by which to collect comments within the stated timeframes.

NRCS also received 24 comments that expressed nonspecific dissatisfaction with EQIP or the interim rule and 47 comments that supported EQIP or the interim rule. These comments do not include any recommendations for change. This final rule responds to the comments received by the public comment deadline and makes minor clarifying and related changes.

Administration

Comment: NRCS received comment related to EQIP administration, including comment addressing outreach, organic production, input from State advisory committees, funding targets, expanding the Working Lands for Wildlife model, additional training to employees, and allowing grazing on all land uses.

Response: NRCS appreciates the suggestions for improving outreach and operations and will incorporate suggestions when updating outreach plans and EQIP policies. No change is being made to the regulation in response to this issue.

Advance Payments

Comment: NRCS received comment recommending making advance payments mandatory or changing their timing, including making the advance payment when the producer is ready to begin the practice or to begin the 90-day clock upon practice installation.

Response: NRCS built criteria into business tools that must be met prior to approving an advance payment, including verification that the request is for an immediate need and that a final design has been accepted by the participant. NRCS cannot change the start time for the 90-day clock since statute specifies that the clock starts on the date that the advance payment is received by the participant. The participant's receipt of the advance payment, and NRCS's expenditure of funds, commences the 90-day clock. NRCS offers advance payments to all historically underserved producers and records, by contract item, the producer decision to receive advance payments on the EQIP schedule of operations. No change is being made to the regulation in response to this issue.

Applicability

Comment: NRCS received comment recommending changes to EQIP's purpose, scope, and objectives as discussed in the Applicability section, § 1466.1, including identifying that EQIP participation should also avoid the need for regulatory programs, identifying that the EQIP purpose includes financial and technical assistance to organic producers, adding that new or expected resource concerns relate also to organic producers, and suggesting that assisting producers with transitioning from an expiring Conservation Reserve Program (CRP) contract should be an EQIP priority in order to keep land in grass and maintain financial and resource investments.

Response: The final rule focuses on the purposes spelled out in statute, including referencing assistance related to organic production and helping producers transition from CRP and, in doing so, keeping land in grass and thereby maintaining financial and resource investments. The regulatory text has been modified at § 1466.1(a) and § 1466.20(b) to address these concerns. No other changes are being made to the regulation in response to this issue.

CIGs

CIG On-Farm Trials

Comment: NRCS received comment supporting CIG On-farm Trials testing of new technologies at the field level, including recommending that NRCS clearly state that on-farm conservation research is authorized under CIG, and that soil health testing be required of all On-farm Trials to determine impacts to soil health.

Response: On-farm Trials ''facilitate and incentivize experimentation and testing of new and innovative conservation approaches.'' If research falls within the scope of ''experimentation and testing,'' it is an authorized activity for On-farm Trials. Soil health testing is not a required part of every On-farm Trials project, although NRCS may apply the extent to which an On-farm Trial seeks to measure or improve soil health as a ranking consideration in the context of funding opportunities. No change is being made to the regulation in response to this issue.

Other

Comment: NRCS received comment recommending changes to other aspects of CIG, requesting NRCS waive its one-

to-one match requirement for grants that assist historically underserved producers, reword the 10 percent funding for grants that assist historically underserved producers to require that no less than 10 percent of CIG funding be awarded to historically underserved producers, expand the purpose of CIG to specifically mention on-farm practical field research as a purpose, and directing a CIG study for new and innovative manure management.

Response: This final rule allows a reduction of match requirements for historically underserved producers on a case-by-case basis and sets forth the criteria for granting such a match reduction. NRCS has consistently met the 10 percent funding goal for historically underserved producers and is committed to improving outreach to this demographic. No changes are made regarding the funding goal in the final rule. This rule is expanding the purposes language in the regulation to include practical field research and is continuing to work with producers and partners to develop innovative practices for manure management through multiple avenues, including CIG.

SHD Trials

Comment: NRCS received comment recommending that NRCS add language to the rule to diversify participation in SHD Trials—for example, by farm type, size, location, and underrepresented producers. Comment also recommended funding for soil testing.

Response: The final rule provides for a process that results in diverse CIG participation. NRCS is developing a soil test activity which could be utilized in CIG contracts with producers. If an SHD Trial results in a reliable, efficient, and cost-effective process for soil health testing, NRCS will consider it in developing the soil test activity noted above. No additional language was added to the regulation in response to this issue.

Conservation Practices

High-Priority Practices

Comment: NRCS received comment recommending specific targets and specific habitat and area restoration plans (such as prioritizing practices with a high environmental benefit but low adoption rate or offering longer contracts with additional payments for foregone income for practices that benefit wildlife).

Response: The EQIP regulation gives States the greatest flexibility to adapt to local needs and determine high-priority practices in consultation with State technical committees and local working groups. States currently have the authority to prioritize practices that have a high environmental benefit but low adoption rate to increase practice adoption. In addition, EQIP provides the opportunity for producers to enter into contracts of up to 10 years, and NRCS currently allows States to assign higher significance to wildlife habitat development and other natural resource concerns when determining rates for estimated foregone income. No change is being made to the regulation in response to this issue.

Incentive Practices

Comment: NRCS received comment recommending prioritizing EQIP incentive practices that are compatible with ecosystem services markets; prioritizing applications with at least two priority resource concerns; allowing EQIP grazing practices on cover crops and other grass-based practices that have wildlife benefits; prioritizing payments for management practices to encourage long-term, beneficial changes to production systems; and using longer-term incentive contracts in certain circumstances, such as with wildlife projects.

Response: Incentive practices are a relatively new area for NRCS, and NRCS is continuing to work with State, local, and Tribal groups to develop practices that are best suited for incentive payments in each high-priority area. As NRCS develops those practices, it is considering compatibility with ecosystem services markets, multiplicity of benefits, wildlife benefits, long-term benefits, and term length where appropriate and within the bounds of statute. No change is being made to the regulation in response to this issue.

Other

Comment: NRCS received comment recommending incorporating new technologies and advancements in conservation practice standards, creating interim standards where beneficial, and encouraging flexibility to better address State and local needs.

Response: NRCS will continue to adapt and innovate the application of science and technology to provide the best resource conservation possible through each of its programs, including EQIP. These adaptations and innovations will be reflected in future NRCS practice standards. No change is being made to the regulation in response to this issue.

Prairie Pothole Wildlife Practice

Comment: NRCS received comment recommending prioritizing longer wildlife habitat contracts to benefit such areas as the Prairie Pothole Region and rice-producing areas. The EQIP statute (section 1240B(g)(3)), provides for longer-term (up to 10 year) contracts that benefit wildlife and includes postharvest flooding practices or practices that maintain the hydrology of temporary and seasonal wetlands.

Response: NRCS recognizes the importance of wildlife protection in the Prairie Pothole Region and rice-producing areas. State and regional priorities determine how best to implement strategies for ensuring the most appropriate contract terms are in place to protect wildlife. No change is being made to the regulation in response to this issue.

Soil Health

Comment: NRCS received comment requesting that NRCS provide more soil health practice options, including suites or bundles of soil health practices through outreach efforts and asked that NRCS consider additional ranking points for applicants using suites or bundles of soil health practices. Comment also asked that NRCS develop soil health planning protocols for cropland, grazing land, and other agricultural lands; that these protocols be widely available through EQIP technical and financial assistance; and that soil health testing be required for any contract supporting the adoption of soil health practices and that grazing of cover crops be permitted to enhance soil health conditions.

Response: Improving and maintaining soil function is a priority for, and a foundation of, NRCS's programs and maintaining or developing relevant measures to promote soil health is a focus of the agency.

Regarding the overall process of additional soil health conservation practice options, NRCS follows a formal process to review each national conservation practice standard at least once every 5 years from its date of issuance or review. Interim conservation practice standards serve as mechanisms for field testing new technology. Interim conservation practices that prove successful are either developed into national conservation practice standards or incorporated into existing practice standards, as appropriate. States may modify national practice standards to meet State or local needs.

The National Technical Guide Committee publishes a notice in the **Federal Register** requesting comments on all additions or revisions to conservation practices in the NRCS National Handbook of Conservation Practice Standards. The comment

period is not less than 30 days from the date of notice publication.

The NRCS Conservation Practice Standard Cover Crop (Code 340) provides guidance for grazing cover crops. Grazing of cover crops may be permitted depending on such factors as the soil condition and growth state of the cover crop. When addressing conditions such as soil health and organic matter content, cover crop species will be selected on the basis of producing higher volumes of organic material and root mass to maintain or increase soil. Grazing must not cause negative impact to the site (for example, erosion or compaction).

No change is being made to the regulation in response to these issues.

Source Water Protection

Comment: NRCS received comment suggesting that wetland practices, such as wetland restoration and buffers, count as source water protection practices. Comment noted the importance of involving State technical committees in designating source water protection areas and eligible source water protection practices.

Response: NRCS will continue to work closely with State technical committees, which are crucial in designating source water protection areas and eligible source water protection practices. As determined by NRCS in collaboration with the State technical committees, wetland restoration and buffers will be source water protection practices. No change is being made to the regulation in response to this issue.

Contract Administration

Comment: NRCS received comment encouraging that NRCS use the longest possible contract lengths (up to 10 years) for wildlife conservation, especially for wildlife practices that require high levels of site preparation and maintenance. Comment also highlighted that EQIP requires applicants to obtain the written concurrence of the landowner to apply a conservation practice, while Colorado state law allows ditch owners to install water pipelines to replace open-air ditches without the landowner's consent.

Response: States already may offer contracts with a term of up to 10 years with one or more annual management practices to restore, develop, protect, and improve wildlife habitat. Regarding the difference between State law and Federal regulation, the EQIP requirement to obtain landowner permission to apply a conservation practice cannot be waived. However, if the holder of the right of way has the property rights necessary to install water pipelines without consent of the fee title landowner, then NRCS considers the holder of the right of way the landowner for consent purposes. No change is being made to the regulation in response to this issue.

Contract Limits Unrelated to Water Management Entities

Comment: NRCS received comment recommending removing joint operations and confined animal feed operations (CAFOs) from the list of operations for which a waiver can be requested to exceed the $450,000 contract limit. The specific change requested was to amend the rule by striking § 1466.21(e)(1)(ii)(A) and the words or individual member thereof from § 1466.6(d)(3)(iii).

While the higher contract limit does not relate specifically to CAFOs, the comment associated CAFOs with joint operations and the availability of higher levels of program assistance. Comment also recommended that EQIP not fund CAFOs at all.

Response: By statute, EQIP has an aggregate $450,000 payment limitation per person or legal entity, directly or indirectly, for all contracts entered into during fiscal years (FYs) 2019 through 2023. The overall program payment limitation may not be waived; further, NRCS does not have the discretion to automatically disqualify CAFOs from EQIP assistance. Under payment limitation requirements that apply to NRCS and Farm Service Agency programs, joint operations are able to receive a payment up to the maximum amount specified for a person or legal entity multiplied by the number of persons or legal entities that comprise ownership of that joint operation (see 7 CFR part 1400). When a joint operation consisting of two or more members enters into an EQIP contract, the EQIP contract with the joint operation may receive funding of up to $900,000. Without a contract limit, joint operations could receive very large payments under an EQIP contract.

To address concerns related to large contracts with joint operations, NRCS in 2009 imposed a regulatory contract limit that corresponded with the EQIP payment limit. The 2009 interim rule did not adjust the contract limit for joint operations, and this system was maintained in the EQIP regulation through the 2014 Farm Bill. The $450,000 limit does not, therefore, represent a change to EQIP brought about in the 2019 interim rule.

To clarify, the overall program payment limitation may not be waived. No member of a joint operation may receive more than $450,000 in payment through EQIP for program years 2019 through 2023. But, when a joint operation consisting of two or more members enters into an EQIP contract, the EQIP contract with the joint operation may receive funding of up to $900,000. EQIP is using this flexibility to help streamline contract administration for these types of arrangements. Unlike the Conservation Stewardship Program (CSP), EQIP does not require enrollment of the entire operation. Each operation may receive multiple contracts for EQIP; therefore, the purpose of contract limits in EQIP differs from that in CSP.

No change is being made to the regulation in response to these issues.

Contract Requirements

Comment: NRCS received comment recommending provisions for NRCS to incorporate into the EQIP contracts with producers, including requiring participants to report EQIP environmental outcomes to NRCS; ensuring that the eligibility of irrigation districts for EQIP contracts does not alter the annual funding allocation to States; strengthening support for best grazing management practices; limiting contracts to only 1 year; and requiring consideration as to how irrigation projects and practices could inadvertently negatively impact wildlife habitats and wetlands and increase water consumption by bringing additional land into production or converting land to more water-intensive crops.

Response: NRCS provides an assessment of resource concerns, including impacts to wildlife and water conservation, before a practice or activity is implemented, and determines any potential effects and expected environmental outcomes through the ranking process prior to approving EQIP contracts. In accordance with statutory limitations, NRCS does not provide supplemental allocations to States for WME projects. Contract terms are up to 10 years with the actual term determined by the producer and agreed to by NRCS. No change is being made to the regulation in response to this issue.

Contracts With Water Management Entities

Adjusted Gross Income and Payment Limitation Waiver

Comment: NRCS received comment related to AGI and payment limitation waiver criteria with respect to contracts with WMEs, including: General support

for the $900,000 payment limit; support for increasing the payment limitation amount to over $900,000 as long as it adheres to specific, narrow cases allowed by statute; and support for increasing the payment limit to at least 10 times the individual limit (over $4.5 million) to address large-scale irrigation infrastructure projects. Other comment suggested waiver criteria, such as if the contract addressed multiple natural resource concerns outlined in statute, service to multiple farm operations, or benefitted historically underserved producers. Some comment expressed a desire that individual producers maintain access to funds within State EQIP allocations, either by maintaining the $900,000 payment limit, reducing it to the standard $450,000, by establishing a separate national allocation pool for WME projects or continuing to fund WMEs thorough RCPP. Other comment recommended separating the AGI waiver and payment limitation waiver.

Response: NRCS appreciates the diverse array of views. When a WME establishes through its program application that it deserves an AGI waiver using the criteria established in the interim rule (and retained in this final rule), it also establishes that it needs an increased contract limit. The contract limit of $900,000 is an appropriate size to draw a distinction between EQIP and other programs that may protect watersheds, such as RCPP or Watershed Operation Assistance under public law 83–566. No change is being made to the regulation in response to this issue.

Land Eligibility Criteria

Comment: NRCS received comment expressing general support for contracts with WMEs; recommending expanding the definition of adjacent land to include lands that create a direct connection between the infrastructure under the control of a WME and the producer's land (*i.e.,* any land over which the WME holds an easement); limiting the scope of adjacent land to land that abuts an EQIP-eligible farm or ranch and is necessary for the practice or system being implemented by the WME; limiting recipients of EQIP funds to existing agricultural producers; and, ensuring that EQIP contracts do not enable water spreading, increase consumptive use, or put new land into agricultural production.

Response: The term ''adjacent'' is not defined in the interim rule or in this final rule. However, the adjacent land must meet several criteria in order to be eligible for enrollment in a contract with a WME, including that it must be ''necessary to support the installation of a conservation practice or system on eligible land.'' This supports an expansive interpretation of ''adjacent'' while ensuring that the adjacent land's enrollment supports the installation of a practice or system on eligible land. No change is being made to the regulation in response to this issue.

Other

Comment: NRCS received comment supporting the expansion of EQIP eligibility to WMEs, including land grant—mercedes, and recommended streamlined processes, clarification on eligibility, and guidance for WMEs on application.

Response: Streamlining and clarification will be addressed through additional outreach and communication to stakeholders. No change is being made to the regulation in response to this issue. The regulation in § 1466.6, ''Program requirements,'' includes additional criteria for WME eligibility, consistent with statutory direction, to ensure water conservation projects typical of land grant—mercedes can be considered for assistance.

Definitions

Eligible Land

Comment: NRCS received comment recommending including reference to wildlife under the definition for eligible land to incentivize stewardship of land managed for wildlife and expanding the definition of associated agricultural lands to include neighboring properties as eligible lands to both support agriculture and wildlife habitat.

Response: NRCS appreciates the interest in EQIP from wildlife and conservation stakeholders. The purpose of EQIP is to provide financial and technical assistance to agricultural producers on eligible agricultural and nonindustrial private forest land. No change is being made to the regulation in response to this issue.

High-Priority Area

Comment: NRCS received comment on the definition of high-priority areas, including recommending how to conduct a robust consultation process with the State technical committees and other stakeholders, selecting areas that cover broad and diverse areas of agricultural production and resource concerns, and also selecting areas based on a narrower, prioritized implementation approach.

Response: NRCS will continue to work cooperatively with State technical committees through the local working group process to select high-priority areas consistent with national, State, and local priorities. No change is being made to the regulation in response to this issue.

Priority Resource Concern

Comment: NRCS received comment supporting the local role of the State in setting priority resource concerns, including wildlife practices and high-priority practices.

Response: NRCS will continue to work cooperatively with State technical committees to select priority resource concerns consistent with national, State, and local priorities. No change is being made to the regulation in response to this issue.

Soil Testing

Comment: NRCS received comment that supported identifying appropriate soil health testing protocols, requiring the protocols in all EQIP contracts related to soil health, and quantifying the environmental outcomes of EQIP contracts on soil health.

Response: NRCS appreciates the attention that the public has given to soil health. NRCS continues to develop activities designed around soil health and soil testing, which are likely to receive recognition in local, State, or national priorities for ranking or other purposes. No change is being made to the regulation in response to this issue.

Water Management Entities

Comment: NRCS received comment recommending that the definition of ''water management entity'' include mutual ditch, irrigation, and canal companies as ''similar entities'' due to their similarities to acequias in their purpose, size, legal status, and organizational structure. Comment also supported limiting EQIP funding for WMEs to contracts where the water users are farmers and ranchers.

Response: NRCS will keep the current definition of WME in § 1466.3, since this definition does not exclude ditch and related companies. Ditch and related companies *may* be eligible WMEs if they are a semipublic organization with the purpose of assisting private agricultural producers manage water distribution or conservation systems. No change is being made to the regulation in response to this issue.

Eligibility

Comment: NRCS received comment recommending EQIP eligibility language reflect grazing rights on public lands better, make entities that do not have direct control of the land and members of Internal Revenue Code (IRC) Section

501(d) religious organizations eligible for participation, and expand eligibility for On-farm Trials to organizations that conduct business related to conservation on agricultural lands.

Response: Control of land is a necessary requirement for participant eligibility. The participant must be able to implement the requirements of the EQIP contract, which is demonstrated through control of the land.

Regarding publicly-owned land, NRCS considers whether the land is within the applicant's control (in other words, that the applicant can implement the terms of the EQIP contract), whether the land is a working component of the producer's agricultural or forestry operation (for example, that the producer uses the land for grazing), and whether conservation practices to be implemented on the public land are necessary and will contribute to an improvement in the identified resource concern. If all three criteria are met, the land may be eligible.

Religious organizations are not excluded from eligibility. A legal entity organized under IRC Section 501(d) meets the definition of legal entity in § 1466.3 provided it owns land or an agricultural commodity, product, or livestock or produces an agricultural commodity, product, or livestock.

An eligible entity for the purposes of On-farm Trials includes a third-party private entity, the primary business of which is related to agriculture. This includes organizations that conduct business related to conservation on agricultural lands.

No change is being made to the regulation in response to this issue.

Environmental Assessment

Comment: NRCS received comment related to the Programmatic Environmental Assessment (EA). Comment asserted: The current ''no action'' alternative is not a legally permissible outcome; the Programmatic EA must indicate which decisions are discretionary or mandatory; for discretionary decisions, NRCS must list at least two legally permissible alternatives; and because the Programmatic EA is insufficient, the Finding of No Significant Impact (FONSI) is also insufficient.

Comment also indicated that data collection is a key input to assessing environmental impact, suggesting that NRCS incentivize producer participation in third-party data collection services to track environmental benefits of conservation practices.

Response: NRCS prepares its programmatic National Environmental Policy Act (NEPA) documents to provide broad-scale analyses to which site-specific program actions may tier, when appropriate, for purposes of complying with NEPA. NEPA does not require Federal agencies to consider alternatives that have substantially similar consequences; rather, it is clearly intended to help agencies avoid significant adverse impacts. The ''no action'' alternative describes continuation of EQIP under its previous regulations. NEPA regulations require analysis of a no action alternative for comparative reasons. Conservation activities associated with each EQIP contract undergo additional site-specific environmental review and analysis designed to avoid, minimize, rectify, reduce, eliminate, or compensate for any potential adverse impacts. No change is being made to the regulation in response to this issue.

EQIP Plan of Operations—Comprehensive Nutrient Management Plan

Comment: NRCS received comment about progressive implementation of a CNMP, asserting that the interim rule only requires development of a CNMP and does not require progressive implementation and thus is contrary to the intent of Congress.

Response: NRCS understands these comments to suggest that the interim rule is ambiguous regarding CNMP implementation. This rule revises the regulation to add clarity. From a practical standpoint, a producer implementing EQIP-funded conservation practices consistent with CNMP is progressively implementing CNMP. However, some EQIP contracts are for development of CNMP as a conservation activity plan only. There are no practices to implement progressively under these contracts other than the plan itself. In addition, this rule clarifies that CNMP will address all ''applicable'' natural resources since natural resource issues are site-specific. In this manner, NRCS hopes to avoid any confusion about the scope of CNMP while maintaining core aspects that have been in the CNMP definition since 2003.

Fund Allocations

Comment: NRCS received comment recommending that NRCS address the funding allocation for wildlife conservation practices, including that NRCS: Ensure the 10 percent allocation is a ''floor'' and not a ''ceiling'' for wildlife practice funding; set the 10 percent allocations at the State rather than national level; make a narrower list of practices that count toward the 10 percent allocation or including State partners in determining which practices should count in that State; and exclude EQIP contracts from the 10 percent allocation that involve either the Working Lands for Wildlife model or interagency cooperation with the U.S. Fish and Wildlife Service. Comment also expressed a desire for increased collaboration with State and local partners for targeting wildlife habitat and conservation.

Other comment addressed the funding allocation for livestock practices, including disapproval of the statutory change from 60 percent to 50 percent, opinion that the 50 percent mandate was far too high, and request about how the national mandate is implemented on a State-by-State basis.

Comment also addressed other fund allocation topics as follows:

- Concern over whether NRCS was making equitable allocations to States by citing a 2017 U.S. Government Accountability Office report suggesting that NRCS was using historical allocation data rather than seeking to optimize environmental benefits.
- Recommendation to create a national initiative for targeted funding for small-scale operations based on existing State-level initiatives.
- Concern that allocations of funds to WMEs would take conservation dollars away from producers, so they requested that NRCS add language ensuring that producers would be the ultimate beneficiaries of EQIP funding for contracts with WMEs.
- Note that Congress did not want contracts with irrigation districts to adjust State funding allocations.
- Suggestion that contracts with WMEs should increase allocations for western States.
- Request that NRCS link funding allocations to accountability mechanisms so that activities with limited conservation benefits are not funded.

Response: NRCS will consider these comments in its allocation process. The breadth and depth of these comments indicate the importance of fund allocations to EQIP stakeholders and partners. EQIP implementation, including the allocation of funding, is complex in nature because the statute provides for multiple goals and requirements. All statutory goals must be addressed even though some desired outcomes are difficult or impossible to quantify given current information availability. Through local input, combined with the use of the Conservation Effect Assessment Project (CEAP) and other important data, USDA seeks to enable program managers and

leaders to achieve the most effective and efficient program outcomes across the entire range of statutory goals.

State technical committees and local work groups, with the knowledge and expertise of their members, also provide additional sources of data and information. Their membership includes leaders in agriculture, conservation, producers, and other stakeholders and their input provides a means of ensuring EQIP allocations are made according to the resource concern, targeted to the local conditions, and relevant to and contributing to national resource priorities. These State and local sources provide valuable information and data on environmental concerns not otherwise available, thus giving allocation decisions far more depth and granularity. The State technical committee regulation and standard operating procedures address this process and thus no change is being made to the EQIP regulation in response to this issue.

General

Comment: NRCS received comment requesting a modification to how the changes made by the 2018 Farm Bill appear in the interim rule preamble.

Response: The interim rule preamble provides a summary and is not intended to represent a comprehensive description of the 2018 Farm Bill changes. NRCS encourages reviewers to read the 2018 Farm Bill if additional perspective is sought. No change is being made to the regulation in response to this issue.

Incentive Contracts—Selection Criteria

Comment: NRCS received comment recommending NRCS modify the incentive contract selection criteria, giving priority to applications aiming to make the participant eligible for CSP at the end of the contract period.

Response: Incentive contracts are designed to serve as a bridge between EQIP and CSP. State technical committees and other local stakeholders designate priority resource concerns and high-priority areas and assist in determining priority resource concerns for CSP. The final rule maintains language in the interim rule to maximize local control over what EQIP practices are best suited for the applicant to transition to CSP. No change is being made to the regulation in response to this issue.

National Priorities

Comment: NRCS received comment recommending the addition of soil health, climate resilience, and drought resiliency to the list of national priorities in § 1466.4(a), indicating that Congress made soil testing and soil health planning qualified activities for EQIP support in the 2018 Farm Bill, and that Congress spoke to the need to focus on climate resilience by making addressing weather variability and drought resilience new purposes for EQIP.

Response: Rather than increasing the number of national priorities from 8 to 10, this rule adds concepts of soil health and climate resiliency to existing national priorities. In particular NRCS incorporates concepts of climate resiliency through the addition of the language ''increased resilience against drought and weather volatility'' in § 1466.4(a)(4) and incorporates ''improvement of soil health'' in § 1466.4(a)(6).

Outreach Activities

Comment: NRCS received comment recommending a variety of different actions with respect to its outreach activities, including: Requesting a focus on the conservation benefits of wildlife practices; targeting diverse farming operations; additional outreach at the local level; adding information on advance payment options in outreach to historically underserved producers to increase EQIP participation; and using USDA and other data to inform producers of the potential economic impact of adopting conservation practices. Comment recommended that NRCS track and provide annual information to the public on the results of the allocations for wildlife practices and the use of native plants. Other comment offered general support for NRCS activities.

Response: NRCS is committed to providing high-quality service across the Nation. Outreach strategies and efforts are in place at the national, State, and local levels, with those at the State and local level tailored to the needs of the specific area. In addition, targeted outreach efforts are underway for historically underserved producers and Tribes. In the regulation, § 1466.5 contains special outreach authorization for historically underserved producers and a paragraph including outreach and documentation to historically underserved producers pertaining to advance payments. Regarding economic impacts, NRCS considers estimated economic impact in its conservation planning process, including in the development of conservation practice standards. The 2018 Farm Bill also requires the Secretary to identify available data sets within USDA that link the use of conservation practices to farm and ranch profitability (including crop yields, soil health, and other risk-related factors).

NRCS tracks EQIP investment and performance. In addition to the 2018 Farm Bill's emphasis on reporting EQIP outcomes, the agency has an interest in understanding the impact of the statutory increase of the wildlife allocation from 5 to 10 percent. Regarding publicly available reports, the Soil and Water Resources Conservation Act (RCA) provides broad natural resource strategic assessment and planning authority for USDA. Information about NRCS's conservation programs at the State, regional, and national level, is available on the RCA interactive data viewer (*https://www.nrcs.usda.gov/wps/portal/nrcs/detail/national/technical/nra/rca/ida/*).

No changes have been made to the regulation in response to these comments.

Payment Limits

Comment: NRCS received comment related to payment limits, including opposition to the increased payment limit for participants in the organic initiative, request for removal of the $200,000 payment limit for incentive contracts, and support for keeping the aggregate payment limit of $450,000.

Response: NRCS provides financial and technical assistance, through the National Organic Initiative, to help organic or transitioning-to-organic producers. In the interim rule, in § 1466.24, NRCS updated the payment limitations for organic production from annual limits to an aggregate limit from FY 2019 through 2023, as required by the 2018 Farm Bill. Economic analysis indicates little impact as organic initiative contracts are usually well below the multiyear payment limit of $80,000 previously set by the 2014 Farm Bill. In the past, organic participants who exceed the organic initiative payment limit use other EQIP funding mechanisms. With the increased limit, more organic applicants will be able to make use of the organic initiative and consequently need only compete with other organic operations for funding.

The 2018 Farm Bill's introduction of EQIP incentive contracts provides a new option for participation. In § 1466.44 of the interim rule NRCS established criteria for incentive payments, including establishing a regulatory $200,000 payment limit similar to CSP, and ensuring that incentive contracts support a participant's ability to transition to CSP eligibility. While there were no comments submitted that opposed the $200,00 payment limit in this section, NRCS may consider setting

a contract limit on EQIP incentive contracts in the future.

No change is being made to the regulation in response to this issue.

Payment Rates

Comment: NRCS received comment on the topic of payment rates, including adding the cost of third-party measurement of environmental benefits of adopted practices to payment rates as well as soil testing and data collection costs associated with using emerging sustainability tools and platforms and emerging ecosystem markets; using additional financial incentives (for example, through increased foregone income payments or higher cost-share percentages for high-priority practices) to meet the funding goal for wildlife practices; concern that payments received by participants may exceed the actual costs associated with the practice; and recommending that States, not regions, set payment rates, as project costs can vary widely from State to State.

Response: NRCS follows a methodical approach and will consider each comment in developing payment schedules. The 2018 Farm Bill authorized increased payment rates for certain high-priority practices and for practices that address source water protection. Further, States can designate high-priority practices that will be eligible for higher payment rate at the State level. Policy requires soliciting input from State technical committees and the posting of payment schedules on a public website. In addition, as NRCS develops the functionality of digital tools, such as the Conservation Assessment and Ranking Tool (CART), the process of determining payment rate alignment with statutory factors will be refined. NRCS incorporates all statutory payment factors into regulations and ensures that payment rates are consistent between EQIP and CSP. No change is being made to the regulation in response to this issue.

Ranking

Comment: NRCS received comment recommending criteria changes to ranking and the weighting of ranking factors including that: Ranking focus on the net benefit to stream flows; preference be given to operators who have demonstrated ''best practices'' (with a focus on nonpoint source pollution); accountability mechanisms be built to ensure practices are achieving the maximum benefit; States prioritize practices addressing multiple resource concerns; and priority for EQIP enrollment be provided to land transitioned through the CRP Transition Incentive Program (CRP–TIP) (see 16 U.S.C. 3835(f)(1)(E)).

Response: NRCS will continue to work cooperatively with its State and local partners to develop ranking criteria that fit national, State, and local priorities. These priorities may include net benefit to stream flows, nonpoint source pollution, the feasibility of requiring accountability mechanisms in contract implementation, or multiplicity of conservation benefits. However, NRCS is not requiring these specific ranking factors in every situation.

State Conservationists, in consultation with State technical committees, determine how many extra points to provide CRP–TIP in ranking. NRCS is committed to protecting CRP–TIP land in transition to a covered farmer or rancher and has incorporated this statutory priority in this final rule by adding language to §§ 1466.1 and 1466.20(b). No other changes are made to the regulation in response to this issue.

Paperwork Reduction Act and Effective Date

In general, the Administrative Procedure Act (APA) (5 U.S.C. 553) requires that a notice of proposed rulemaking be published in the **Federal Register** and interested persons be given an opportunity to participate in the rulemaking through submission of written data, views, or arguments with or without opportunity for oral presentation, except when the rule involves a matter relating to public property, loans, grants, benefits, or contracts. This rule involves matters relating to benefits and therefore is exempt from the APA requirements. Further, the regulations to implement the programs of chapter 58 of title 16 of the U.S. Code, as specified in 16 U.S.C. 3846, and the administration of those programs, are—

- To be made as an interim rule effective on publication, with an opportunity for notice and comment,
- Exempt from the Paperwork Reduction Act (44 U.S.C. ch. 35), and
- To use the authority under 5 U.S.C. 808 related to Congressional review.

Consistent with the use of the authority under 5 U.S.C. 808 related to Congressional review for the immediate effect date of the interim rule, this rule is also effective on the date of publication in the **Federal Register**.

Executive Orders 12866, 13563, 13771, and 13777

Executive Order 12866, ''Regulatory Planning and Review,'' and Executive Order 13563, ''Improving Regulation and Regulatory Review,'' direct agencies to assess all costs and benefits of available regulatory alternatives and, if regulation is necessary, to select regulatory approaches that maximize net benefits (including potential economic, environmental, public health and safety effects, distributive impacts, and equity). Executive Order 13563 emphasized the importance of quantifying both costs and benefits, reducing costs, harmonizing rules, and promoting flexibility. The requirements in Executive Orders 12866 and 13573 for the analysis of costs and benefits apply to rules that are determined to be significant. Executive Order 13777, ''Enforcing the Regulatory Reform Agenda,'' established a Federal policy to alleviate unnecessary regulatory burdens on the American people.

The Office of Management and Budget (OMB) designated this rule as economically significant under Executive Order 12866, and therefore, OMB has reviewed this rule. The costs and benefits of this rule are summarized below in the next section of this rule. The full regulatory impact analysis is available on *https://www.regulations.gov/.*

Executive Order 13771, ''Reducing Regulation and Controlling Regulatory Costs,'' requires that, to manage the private costs required to comply with Federal regulations for every new significant or economically significant regulation issued, the new costs must be offset by the savings from deregulatory actions. This rule involves transfer payments and is not required to comply with Executive Order 13771.

In general response to the requirements of Executive Order 13777, USDA created a Regulatory Reform Task Force, and USDA agencies were directed to remove barriers, reduce burdens, and provide better customer service both as part of the regulatory reform of existing regulations and as an on-going approach. NRCS reviews regulations and makes changes to improve any provision that was determined to be outdated, unnecessary, or ineffective.

Cost Benefit Analysis

Most of this rule's impacts consist of transfer payments to producers for completed conservation practices under EQIP contracts. There are also costs and benefits, which are described after a discussion of the transfers. The 2018 Farm Bill increases EQIP funding over 2014 Farm Bill funding by 15 percent on average to $1.84 billion per year. From FY 2014 through 2018, EQIP was authorized at $8.0 billion, but annual funding restrictions resulted in actual authority being $7.51 billion, for an

annual average amount of $1.50 billion. In contrast, the authorized level for EQIP for FY 2019 through 2023 is $9.18 billion (assuming future funding is set at authorized amounts). Additionally, EQIP funds remain available until expended, meaning that any unobligated balance at the end of a fiscal year is available for obligation in the subsequent year.

NRCS recognizes that a participant incurs costs in gaining access to EQIP. These costs are in addition to the participant's share of the cost of implementing conservation activities under EQIP. NRCS estimates the total cost of accessing the program over 5 years to be $17.7 million. The cost to participants of implementing conservation practices over 5 years is estimated at $4.46 billion and total transfers (NRCS funds) over 5 years are estimated at $9.18 billion. Given a 3 percent discount rate, this translates into a projected annualized real cost to producers for implementing conservation practices of $855.10 million and projected annualized real transfers of $1.76 billion (Table 1). In addition, participants incur $3.5 million in access costs in nominal terms.

TABLE 1—ANNUAL ESTIMATED COSTS, BENEFITS, AND TRANSFERS

Category	Annual estimate
Participant costs:	
Access [a]	$3,549,676.
Implementation [b]	855,100,000.
Benefits	Qualitative.
Transfers [c]	$1,760,000,000.

[a] All estimates are discounted at 3 percent to 2019 $ except for the participant access cost, which is nominal.

[b] Imputed cost of applicant time to gain access to EQIP.

[c] Participant share of the cost of implementing conservation practices under EQIP.

The costs associated with this rule consist of the administrative costs of applying for EQIP funding and are described in the full regulatory impact analysis. The benefits of this rule are the environmental improvements that are due to the increased conservation practices over and above those that farmers privately undertake. Conservation practices funded through EQIP will continue to: Contribute to improvements in soil health and reductions in water and wind erosion on cropland, pasture and rangeland; reduce nutrient losses to streams, rivers, lakes and estuaries; increase wildlife habitat; and provide other environmental benefits. Further, continued implementation of practices which treat and manage animal waste through EQIP will directly contribute to improvements in water quality and improvements in air quality (such as reduced risk of algal blooms or reduction in methane emissions, respectively). NRCS estimates that the expenditures, from both public and private sources, of implementing EQIP conservation practices will be $13.6 billion dollars (FY 2019 through 2023), assuming a historical average participant cost of 40 percent and a technical assistance share of 27 percent.

Changes in funding levels for EQIP livestock and wildlife practices will alter to a minor extent the types of conservation practices that are funded. From FY 2014 through 2018, wildlife practices accounted for 7.6 percent of EQIP funds through wildlife and landscape initiatives and 16 designated wildlife conservation practices. The 2.4 percent increase in funding for wildlife to meet the new 10 percent level will likely occur through greater support for existing wildlife initiatives and may target additional wildlife habitat development efforts through new initiatives. With respect to livestock, over 60 percent of EQIP funds went to livestock-related practices during FY 2014 through 2018, but the 2018 Farm Bill reduced this target to 50 percent for each of fiscal years 2019 through 2023. With greater EQIP funding overall, the amount of funding being provided for the implementation of livestock conservation practices should not change significantly.

To address increasing demands on the nation's water supply, the 2018 Farm Bill expands EQIP eligibility to WMEs like irrigation districts, ground water management districts, and acequias, along with providing the Secretary with the authority to waive AGI and payment limits to encourage continued efforts in agricultural water conservation. In some states, particularly in the West, these WMEs may increase competition for funding and enhance conservation benefits per dollar spent. The impacts, however, on the allocation of EQIP funding will be limited. The 2018 Farm Bill directs NRCS to maintain current funding allocations to states, limiting the impact nationally. Also, NRCS in the interim rule established a payment limit of $900,000 on all contracts with WMEs.

The 2018 Farm Bill establishes conservation incentive contracts to address up to three priority resource concerns for each land use within a given watershed, or other region, or area. Contracts will range from a minimum of 5 years to up to 10 years in length and provide an annual payment and incentive practice payments. NRCS has established a payment limit of $200,000 to align with CSP. The impact of these new conservation incentive contracts is uncertain, particularly regarding benefits per dollar. Overall, given the current demand for regular enrollment in EQIP, and the currently uncertain impacts that conservation incentive contracts will have, the aggregate benefits from these new conservation incentive contracts may be limited.

Increasing the payment limit for participants in the organic initiative to $140,000 over the period FY 2019 through 2023, will likely have little impact on EQIP performance. This is because existing organic initiative contracts are usually well below the existing multi-year payment limit of $80,000 set by 2014 Farm Bill. Currently, organic participants who exceed the organic initiative payment limit use other EQIP funding mechanisms. The increase in the organic initiative limit to $140,000 may attract producers who have higher organic practice costs or perhaps larger operations, and EQIP participants may make greater use of the organic initiative and designated funding pool.

Regulatory Flexibility Act

The Regulatory Flexibility Act (5 U.S.C. 601–612), as amended by the Small Business Regulatory Enforcement Fairness Act of 1996 (SBREFA), generally requires an agency to prepare a regulatory analysis of any rule whenever an agency is required by APA or any other law to publish a proposed rule, unless the agency certifies that the rule will not have a significant economic impact on a substantial number of small entities. This rule is not subject to the Regulatory Flexibility Act because this rule is exempt from notice and comment rulemaking requirements of the APA and no other law requires that a proposed rule be published for this rulemaking initiative.

Environmental Review

The environmental impacts of this rule have been considered in a manner consistent with the provisions of NEPA (42 U.S.C. 4321–4347), the regulations of the Council on Environmental Quality (40 CFR 1500 through 1508), and the NRCS regulations for compliance with NEPA (7 CFR part 650). NRCS conducted an analysis of the EQIP interim rule, which determined there will not be a significant impact to the human environment and as a result, an environmental impact statement (EIS) is not required to be prepared (40 CFR 1508.1(l)). The 2018 Farm Bill requires minor changes to NRCS conservation programs, and there are no

changes to the basic structure of the programs. The analysis has determined there will not be a significant impact to the human environment and as a result, an EIS is not required to be prepared (40 CFR 1508.1(l)). While OMB has designated this rule as ''economically significant'' under Executive Order 12866, ''. . . economic or social effects are not intended by themselves to require preparation of an environmental impact statement'' (40 CFR 1502.16(b)), when not interrelated to natural or physical environmental effects. The EA and FONSI were available for review and comment for 30 days from the date of publication of the interim rule in the **Federal Register**. NRCS considered this input and updated the EA and FONSI with information relevant to environmental concerns and bearing on the proposed action.

Executive Order 12372

Executive Order 12372, ''Intergovernmental Review of Federal Programs,'' requires consultation with State and local officials that would be directly affected by proposed Federal financial assistance. The objectives of the Executive Order are to foster an intergovernmental partnership and a strengthened Federalism, by relying on State and local processes for State and local government coordination and review of proposed Federal financial assistance and direct Federal development. For reasons specified in the final rule-related notice regarding 7 CFR part 3015, subpart V (48 FR 29115, June 24, 1983), the program and activities in this rule are excluded from the scope of Executive Order 12372.

Executive Order 12988

This rule has been reviewed under Executive Order 12988, ''Civil Justice Reform.'' This rule will not preempt State or local laws, regulations, or policies unless they represent an irreconcilable conflict with this rule. Before any judicial actions may be brought regarding the provisions of this rule, the administrative appeal provisions of 7 CFR part 11 are to be exhausted.

Executive Order 13132

This rule has been reviewed under Executive Order 13132, ''Federalism.'' The policies contained in this rule do not have any substantial direct effect on States, on the relationship between the Federal Government and the States, or on the distribution of power and responsibilities among the various levels of government, except as required by law. Nor does this rule impose substantial direct compliance costs on State and local governments. Therefore, consultation with the States is not required.

Executive Order 13175

This rule has been reviewed in accordance with the requirements of Executive Order 13175, ''Consultation and Coordination with Indian Tribal Governments.'' Executive Order 13175 requires federal agencies to consult and coordinate with Tribes on a Government-to-Government basis on policies that have Tribal implications, including regulations, legislative comments or proposed legislation, and other policy statements or actions that have substantial direct effects on one or more Indian Tribes, on the relationship between the Federal Government and Indian Tribes, or on the distribution of power and responsibilities between the Federal Government and Indian Tribes.

The USDA's Office of Tribal Relations (OTR) has assessed the impact of this rule on Indian Tribes and determined that this rule does not, to their knowledge, have Tribal implication that require Tribal consultation under Executive Order 13175. Tribal consultation for this rule was included in the two 2018 Farm Bill Tribal consultations held on May 1, 2019, at the National Museum of the American Indian, in Washington, DC, and on June 26–28, 2019, in Sparks, NV. For the May 1, Tribal consultation, the portion of the Tribal consultation relative to this rule was conducted by Bill Northey, USDA Under Secretary for the Farm Production and Conservation mission area, as part of the Title II session. There were no specific comments from Tribes on the EQIP rule during the Tribal consultation. If a Tribe requests consultation, NRCS will work with OTR to ensure meaningful consultation is provided where changes, additions, and modifications identified here in this rule are not expressly mandated by legislation. OTR has determined that Tribal consultation for this rule is not required at this time.

Separate from Tribal consultation, communication, and outreach efforts are in place to assure that all producers, including Tribes (or their members), are provided information about the regulation changes. Specifically, NRCS obtains input through Tribal Conservation Advisory Councils. A Tribal Conservation Advisory Council may be an existing Tribal committee or department and may also constitute an association of member Tribes organized to provide direct consultation to NRCS at the State, regional, and national levels to provide input on NRCS rules, policies, programs, and impacts on Tribes. Tribal Conservation Advisory Councils provide a venue for agency leaders to gather input on Tribal interests. Additionally, NRCS held several sessions with Indian Tribes and Tribal entities across the country in FY 2019 to describe the 2018 Farm Bill changes to NRCS conservation programs, obtain input about how to improve Tribal and Tribal member access to NRCS conservation assistance, and make any appropriate adjustments to the regulations that will foster such improved access. NRCS will continue to conduct these sessions with Indian Tribes and Tribal entities.

Unfunded Mandates

Title II of the Unfunded Mandates Reform Act of 1995 (UMRA) (Pub. L. 104–4), requires federal agencies to assess the effects of their regulatory actions on State, local, and Tribal Governments or the private sector. Agencies generally must prepare a written statement, including cost-benefits analysis, for proposed and final rules with Federal mandates that may result in expenditures of $100 million or more in any 1 year for State, local or Tribal Governments, in the aggregate, or to the private sector. UMRA generally requires agencies to consider alternatives and adopt the more cost-effective or least burdensome alternative that achieves the objectives of the rule. This rule contains no Federal mandates, as defined under Title II of UMRA, for State, local, and Tribal Governments or the private sector. Therefore, this rule is not subject to the requirements of UMRA.

Federal Assistance Programs

The title and number of the Federal Domestic Assistance Programs in the Catalog of Federal Domestic Assistance to which this rule applies:

10.912—Environmental Quality Incentives Program.

E-Government Act Compliance

NRCS and CCC are committed to complying with the E-Government Act, to promote the use of the internet and other information technologies to provide increased opportunities for citizen access to Government information and services, and for other purposes.

List of Subjects in 7 CFR Part 1466

Administrative practice and procedure, Animal welfare, Natural resources, Soil conservation, Water resources.

Accordingly, for the reasons stated above, the interim rule amending 7 CFR part 1466, which was published at 84

FR 69272 on December 17, 2019, is adopted as final with the following changes:

PART 1466—ENVIRONMENTAL QUALITY INCENTIVES PROGRAM

■ 1. The authority citation for part 1466 continues to read as follows:

Authority: 15 U.S.C. 714b and 714c; and 16 U.S.C. 3839aa–3839–8.

■ 2. Amend § 1466.1 by revising paragraphs (a)(2) through (4) to read as follows:

§ 1466.1 Applicability.

(a) * * *

(2) Through EQIP, NRCS provides technical and financial assistance to eligible agricultural producers, including nonindustrial private forest (NIPF) landowners and Indian Tribes, to help implement conservation practices that address resource concerns related to organic production; soil, water, and air quality; wildlife habitat; nutrient management associated with crops and livestock; pest management; ground and surface water conservation; irrigation management; drought resiliency measures; adapting to and mitigating against increasing weather volatility; energy conservation; and related resource concerns.

(3) EQIP's financial and technical assistance helps:

(i) Producers comply with environmental regulations and enhance agricultural and forested lands in a cost-effective and environmentally beneficial manner; and

(ii) To the maximum extent practicable, avoid the need for resource and regulatory programs.

(4) The purposes of EQIP are achieved by planning and implementing conservation practices on eligible land to address identified, new, or expected resource concerns, including such resource concerns related to lands enrolled under a Conservation Reserve Program contract that are transitioning into production as specified in 16 U.S.C. 3835(f).

* * * * *

■ 3. Amend § 1466.3 by revising the definition for ''Comprehensive nutrient management plan (CNMP)'' to read as follows:

§ 1466.3 Definitions.

* * * * *

Comprehensive nutrient management plan (CNMP) means a conservation plan that is specifically for an AFO. A CNMP identifies conservation practices and management activities that, when implemented as part of a conservation system, will manage sufficient quantities of manure, waste water, or organic by-products associated with a waste management facility. A CNMP incorporates practices to use animal manure and organic by-products as a beneficial resource while protecting all applicable natural resources including water and air quality associated with an AFO. A CNMP is developed to assist an AFO owner or operator in meeting all applicable local, Tribal, State, and Federal water quality goals or regulations. For nutrient-impaired stream segments or water bodies, additional management activities or conservation practices may be required by local, Tribal, State, or Federal water quality goals or regulations.

* * * * *

■ 4. Amend § 1466.4 by revising paragraph (a) to read as follows:

§ 1466.4 National priorities.

(a) The national priorities in paragraphs (a)(1) through (8) of this section, consistent with statutory resources concerns, include soil quality, water quality and quantity, plants, energy, wildlife habitat, air quality, increased weather volatility, and related natural resource concerns, that may be used in EQIP implementation are:

(1) Reductions of nonpoint source pollution, such as nutrients, sediment, pesticides, or excess salinity in impaired watersheds consistent with total maximum daily loads (TMDL) where available;

(2) The reduction of ground and surface water contamination;

(3) The reduction of contamination from agricultural sources, such as animal feeding operations;

(4) Conservation of ground and surface water resources, including improvement of irrigation efficiency and increased resilience against drought and weather volatility;

(5) Reduction of emissions, such as particulate matter, nitrogen oxides, volatile organic compounds, and ozone precursors and depleters that contribute to air quality impairment violations of the National Ambient Air Quality Standards;

(6) Reduction in soil erosion and sedimentation from unacceptable levels and improvement of soil health on eligible land;

(7) Promotion of at-risk species habitat conservation including development and improvement of wildlife habitat; and

(8) Energy conservation to help save fuel, improve efficiency of water use, maintain production, and protect soil and water resources by more efficiently using fertilizers and pesticides.

* * * * *

■ 5. Amend § 1466.6 by revising paragraph (d)(1) to read as follows:

§ 1466.6 Program requirements.

* * * * *

(d) * * *

(1) Notwithstanding paragraphs (b) and (c) of this section, NRCS may enter into an EQIP contract with a water management entity provided the criteria in paragraphs (d)(1)(i), (ii), and (iii) of this section can be met:

(i) The entity is a public or semipublic agency or organization,

(ii) Its purpose is to assist private agricultural producers manage water distribution or conservation systems, and

(iii) The water conservation or irrigation practices support a water conservation project under § 1466.20(c) that will effectively conserve water, provide fish and wildlife habitat, or provide for drought-related environmental mitigation, as determined by the Chief.

* * * * *

■ 6. Amend § 1466.7 by revising paragraph (d) to read as follows:

§ 1466.7 EQIP plan of operations.

* * * * *

(d) If an EQIP plan of operations includes an animal waste storage or treatment facility to be implemented on an AFO, the participant must agree to:

(1) Develop a CNMP by the end of the contract period; and

(2) Implement any applicable conservation practices in the EQIP plan of operation consistent with an approved CNMP.

* * * * *

■ 7. Amend § 1466.20 as follows:

■ a. In paragraph (b)(2)(viii), remove the word ''and'';

■ b. Add paragraph (b)(2)(ix); and

■ c. Redesignate paragraph (b)(2)(xi) as paragraph (b)(2)(x).

The addition reads as follows:

§ 1466.20 Application for contracts and selecting applications.

* * * * *

(b) * * *

(2) * * *

(ix) The land is enrolled under a CRP contract transitioning to a covered farmer or rancher as specified in 16 U.S.C. 3835(f); and

* * * * *

■ 8. Amend § 1466.31 by revising paragraph (a) to read as follows:

§ 1466.31 Purpose and scope.

(a) The purpose of Conservation Innovation Grants (CIG) is to stimulate the development and adoption of innovative conservation approaches and technologies, including field research, while leveraging Federal investment in environmental enhancement and protection in conjunction with agricultural production. Notwithstanding any limitation of this part, NRCS administers CIG in accordance with this subpart. Unless otherwise provided for in this subpart, grants under CIG are subject to the provisions of 2 CFR part 200, Uniform Administrative Requirements, Cost Principles, and Audit Requirements for Federal Awards.

* * * * *

■ 9. Amend § 1466.32 by redesignating paragraphs (c) and (d) as paragraphs (d) and (e), respectively, and by adding a new paragraph (c) to read as follows:

§ 1466.32 Conservation innovation grant funding.

* * * * *

(c) *Authority to reduce matching requirement.* The Chief may reduce the matching requirements of paragraphs (b)(1) and (2) of this section, provided that the applicant is:

(1) An historically underserved producer;

(2) A community-based organization comprised of, representing, or exclusively working with historically underserved producers on a CIG project;

(3) Developing an innovative conservation approach or technology specifically targeting historically underserved producers' unique needs and limitations; or

(4) An 1890 or 1994 land grant institution (7 U.S.C. 3222 *et seq.*), Hispanic-serving institution (20 U.S.C. 1101a), or other minority-serving institution, such as an historically Black college or university (20 U.S.C. 1061), a tribally controlled college or university (25 U.S.C. 1801), or Asian American and Pacific Islander-serving institution (20 U.S.C. 1059g).

* * * * *

Kevin Norton,

Acting Chief, Natural Resources Conservation Service.

Robert Stephenson,

Executive Vice President, Commodity Credit Corporation.

[FR Doc. 2020–23437 Filed 10–23–20; 8:45 am]

BILLING CODE 3410–16–P

DEPARTMENT OF TRANSPORTATION

Federal Aviation Administration

14 CFR Part 71

[Docket No. FAA–2020–0505; Airspace Docket No. 20–ASW–1]

RIN 2120–AA66

Amendment of V–63 in the Vicinity of Texoma, OK

AGENCY: Federal Aviation Administration (FAA), DOT.

ACTION: Final rule.

SUMMARY: This action amends VHF Omnidirectional Range (VOR) Federal airway V–63 due to the planned decommissioning of the VOR portion of the Texoma, OK, VOR/Distance Measuring Equipment (VOR/DME) navigation aid (NAVAID). The Texoma VOR provides navigation guidance for a portion of V–63 and is being decommissioned as part of the FAA's VOR Minimum Operational Network (MON) program.

DATES: Effective date 0901 UTC, December 31, 2020. The Director of the Federal Register approves this incorporation by reference action under Title 1 Code of Federal Regulations part 51, subject to the annual revision of FAA Order 7400.11 and publication of conforming amendments.

ADDRESSES: FAA Order 7400.11E, Airspace Designations and Reporting Points, and subsequent amendments can be viewed online at *https://www.faa.gov/air_traffic/publications/.* For further information, you can contact the Rules and Regulations Group, Federal Aviation Administration, 800 Independence Avenue SW, Washington, DC 20591; telephone: (202) 267–8783. The Order is also available for inspection at the National Archives and Records Administration (NARA). For information on the availability of FAA Order 7400.11E at NARA, email: *fedreg.legal@nara.gov* or go to *https://www.archives.gov/federal-register/cfr/ibr-locations.html.*

FOR FURTHER INFORMATION CONTACT: Colby Abbott, Rules and Regulations Group, Office of Policy, Federal Aviation Administration, 800 Independence Avenue SW, Washington, DC 20591; telephone: (202) 267–8783.

SUPPLEMENTARY INFORMATION:

Authority for This Rulemaking

The FAA's authority to issue rules regarding aviation safety is found in Title 49 of the United States Code. Subtitle I, Section 106 describes the authority of the FAA Administrator. Subtitle VII, Aviation Programs, describes in more detail the scope of the agency's authority. This rulemaking is promulgated under the authority described in Subtitle VII, Part A, Subpart I, Section 40103. Under that section, the FAA is charged with prescribing regulations to assign the use of the airspace necessary to ensure the safety of aircraft and the efficient use of airspace. This regulation is within the scope of that authority as it modifies the route structure as necessary to preserve the safe and efficient flow of air traffic within the National Airspace System.

History

The FAA published a notice of proposed rulemaking for Docket No. FAA–2020–0505 in the **Federal Register** (85 FR 38340; June 26, 2020), amending VOR Federal airway V–63 in the vicinity of Texoma, OK. The proposed action was due to the planned decommissioning of the VOR portion of the Texoma, OK, VOR/DME. Interested parties were invited to participate in this rulemaking effort by submitting written comments on the proposal. No comments were received.

VOR Federal airways are published in paragraph 6010(a) of FAA Order 7400.11E dated July 21, 2020, and effective September 15, 2020, which is incorporated by reference in 14 CFR 71.1. The VOR Federal airways listed in this document will be subsequently published in the Order.

Availability and Summary of Documents for Incorporation by Reference

This document amends FAA Order 7400.11E, Airspace Designations and Reporting Points, dated July 21, 2020, and effective September 15, 2020. FAA Order 7400.11E is publicly available as listed in the **ADDRESSES** section of this document. FAA Order 7400.11E lists Class A, B, C, D, and E airspace areas, air traffic service routes, and reporting points.

The Rule

The FAA is amending Title 14 Code of Federal Regulations (14 CFR) part 71 to modify VOR Federal airway V–63 due to the planned decommissioning of the VOR portion of the Texoma, OK, VOR/DME. The VOR Federal airway action is described below.

V–63: V–63 extends between the Bowie, TX, VORTAC and the Texoma, OK, VOR/DME; between the Razorback, AR, VORTAC and the Oshkosh, WI, VORTAC; and between the Wausau, WI, VORTAC and the Houghton, MI, VOR/DME. The airway segment between the Bowie, TX, VORTAC and the Texoma,

OK, VOR/DME is removed. The unaffected portions of the existing airway remain as charted.

FAA Order 7400.11, Airspace Designations and Reporting Points, is published yearly and effective on September 15.

Regulatory Notices and Analyses

The FAA has determined that this regulation only involves an established body of technical regulations for which frequent and routine amendments are necessary to keep them operationally current. It, therefore: (1) Is not a ''significant regulatory action'' under Executive Order 12866; (2) is not a ''significant rule'' under Department of Transportation (DOT) Regulatory Policies and Procedures (44 FR 11034; February 26, 1979); and (3) does not warrant preparation of a regulatory evaluation as the anticipated impact is so minimal. Since this is a routine matter that will only affect air traffic procedures and air navigation, it is certified that this rule, when promulgated, will not have a significant economic impact on a substantial number of small entities under the criteria of the Regulatory Flexibility Act.

Environmental Review

The FAA has determined that this action of modifying VOR Federal airway V–63 due to the planned decommissioning of the VOR portion of the Texoma, OK, VOR/DME NAVAID qualifies for categorical exclusion under the National Environmental Policy Act and its implementing regulations at 40 CFR part 1500, and in accordance with FAA Order 1050.1F, Environmental Impacts: Policies and Procedures, paragraph 5–6.5a, which categorically excludes from further environmental impact review rulemaking actions that designate or modify classes of airspace areas, airways, routes, and reporting points (see 14 CFR part 71, Designation of Class A, B, C, D, and E Airspace Areas; Air Traffic Service Routes; and Reporting Points). As such, this action is not expected to result in any potentially significant environmental impacts. In accordance with FAA Order 1050.1F, paragraph 5–2 regarding Extraordinary Circumstances, the FAA has reviewed this action for factors and circumstances in which a normally categorically excluded action may have a significant environmental impact requiring further analysis. The FAA has determined that no extraordinary circumstances exist that warrant preparation of an environmental assessment or environmental impact study.

List of Subjects in 14 CFR Part 71

Airspace, Incorporation by reference, Navigation (air).

Adoption of the Amendment

In consideration of the foregoing, the Federal Aviation Administration amends 14 CFR part 71 as follows:

PART 71—DESIGNATION OF CLASS A, B, C, D, AND E AIRSPACE AREAS; AIR TRAFFIC SERVICE ROUTES; AND REPORTING POINTS

■ 1. The authority citation for part 71 continues to read as follows:

Authority: 49 U.S.C. 106(f), 106(g); 40103, 40113, 40120; E.O. 10854, 24 FR 9565, 3 CFR, 1959–1963 Comp., p. 389.

§ 71.1 [Amended]

■ 2. The incorporation by reference in 14 CFR 71.1 of FAA Order 7400.11D, Airspace Designations and Reporting Points, dated August 8, 2019, and effective September 15, 2019, is amended as follows:

Paragraph 6010(a) Domestic VOR Federal Airways.

* * * * *

V–63 [Amended]

From Razorback, AR; Springfield, MO; Hallsville, MO; Quincy, IL; Burlington, IA; Moline, IL; Davenport, IA; Rockford, IL; Janesville, WI; Badger, WI; to Oshkosh, WI. From Wausau, WI; Rhinelander, WI; to Houghton, MI. Excluding that airspace at and above 10,000 feet MSL from 5 NM north to 46 NM north of Quincy, IL, when the Howard West MOA is active.

* * * * *

Issued in Washington, DC, on October 17, 2020.

Scott M. Rosenbloom,

Acting Manager, Rules and Regulations Group.

[FR Doc. 2020–23375 Filed 10–23–20; 8:45 am]

BILLING CODE 4910–13–P

DEPARTMENT OF TRANSPORTATION

Federal Aviation Administration

14 CFR Part 71

[Docket No. FAA–2020–0497; Airspace Docket No. 20–ASO–1]

RIN 2120–AA66

Amendment of V–5 and V–178, and Revocation of V–513 in the Vicinity of New Hope, KY

AGENCY: Federal Aviation Administration (FAA), DOT.

ACTION: Final rule.

SUMMARY: This action amends VHF Omnidirectional Range (VOR) Federal airways V–5 and V–178 in the vicinity of New Hope, KY, and removes V–513 in its entirety. The amendments are due to the planned decommissioning of the VOR portion of the New Hope, KY (EWO), VOR/Distance Measuring Equipment (VOR/DME) navigation aid (NAVAID) which provides navigation guidance for portions of the affected airways. The New Hope VOR is being decommissioned as part of the FAA's VOR Minimum Operational Network (MON) program.

DATES: Effective date 0901 UTC, December 31, 2020. The Director of the Federal Register approves this incorporation by reference action under Title 1 Code of Federal Regulations part 51, subject to the annual revision of FAA Order 7400.11 and publication of conforming amendments.

ADDRESSES: FAA Order 7400.11E, Airspace Designations and Reporting Points, and subsequent amendments can be viewed online at *https://www.faa.gov/air_traffic/publications/.* For further information, you can contact the Rules and Regulations Group, Federal Aviation Administration, 800 Independence Avenue SW, Washington, DC 20591; telephone: (202) 267–8783. The Order is also available for inspection at the National Archives and Records Administration (NARA). For information on the availability of FAA Order 7400.11E at NARA, email: *fedreg.legal@nara.gov* or go to *https://www.archives.gov/federal-register/cfr/ibr-locations.html.*

FOR FURTHER INFORMATION CONTACT: Colby Abbott, Rules and Regulations Group, Office of Policy, Federal Aviation Administration, 800 Independence Avenue SW, Washington, DC 20591; telephone: (202) 267–8783.

SUPPLEMENTARY INFORMATION:

Authority for This Rulemaking

The FAA's authority to issue rules regarding aviation safety is found in Title 49 of the United States Code. Subtitle I, Section 106 describes the authority of the FAA Administrator. Subtitle VII, Aviation Programs, describes in more detail the scope of the agency's authority. This rulemaking is promulgated under the authority described in Subtitle VII, Part A, Subpart I, Section 40103. Under that section, the FAA is charged with prescribing regulations to assign the use of the airspace necessary to ensure the safety of aircraft and the efficient use of airspace. This regulation is within the scope of that authority as it modifies the route structure as necessary to preserve

the safe and efficient flow of air traffic within the National Airspace System.

History

The FAA published a notice of proposed rulemaking (NPRM) for Docket No. FAA–2020–0497 in the **Federal Register** (85 FR 34146; June 3, 2020), amending VOR Federal airways V–5 and V–178, and removing V–513 in the vicinity of New Hope, KY, due to the planned decommissioning of the VOR portion of the New Hope, KY, VOR/DME. Interested parties were invited to participate in this rulemaking effort by submitting written comments on the proposal. No comments were received.

Subsequent to the NPRM, the FAA published a rule for Docket No. FAA–2020–0188 in the **Federal Register** (85 FR 38317; June 26, 2020), amending VOR Federal airway V–5 by removing the airway segment between the Choo Choo, TN, VORTAC and the New Hope, KY, VOR/DME. That airway amendment, effective September 10, 2020, is included in this rule.

VOR Federal airways are published in paragraph 6010(a) of FAA Order 7400.11E dated July 21, 2020, and effective September 15, 2020, which is incorporated by reference in 14 CFR 71.1. The VOR Federal airways listed in this document will be subsequently published in the Order.

Availability and Summary of Documents for Incorporation by Reference

This document amends FAA Order 7400.11E, Airspace Designations and Reporting Points, dated July 21, 2020, and effective September 15, 2020. FAA Order 7400.11E is publicly available as listed in the **ADDRESSES** section of this document. FAA Order 7400.11E lists Class A, B, C, D, and E airspace areas, air traffic service routes, and reporting points.

The Rule

The FAA is amending Title 14 Code of Federal Regulations (14 CFR) part 71 to modify VOR Federal airways V–5 and V–178, and remove V–513. The planned decommissioning of the VOR portion of the New Hope, KY, VOR/DME has made this action necessary. The VOR Federal airway actions are described below.

V–5: V–5 extends between the Pecan, GA, VOR/DME and the Choo Choo, TN, VORTAC; and between the New Hope, KY, VOR/DME and the Appleton, OH, VORTAC. The airway segment between the New Hope, KY, VOR/DME and the Louisville, KY, VORTAC is removed. The unaffected portions of the existing airway remain as charted.

V–178: V–178 extends between the Hallsville, MO, VORTAC and the Farmington, MO, VORTAC; and between the New Hope, KY, VOR/DME and the Bluefield, WV, VOR/DME. The airway segment between the New Hope, KY, VOR/DME and the Lexington, KY, VOR/DME is removed. The unaffected portions of the existing airway remain as charted.

V–513: V–513 extends between the Livingston, TN, VOR/DME and the Louisville, KY, VORTAC. The airway is removed in its entirety.

The NAVAID radials contained in the VOR Federal airway descriptions below are unchanged and stated in True degrees.

FAA Order 7400.11, Airspace Designations and Reporting Points, is published yearly and effective on September 15.

Regulatory Notices and Analyses

The FAA has determined that this regulation only involves an established body of technical regulations for which frequent and routine amendments are necessary to keep them operationally current. It, therefore: (1) Is not a ''significant regulatory action'' under Executive Order 12866; (2) is not a ''significant rule'' under Department of Transportation (DOT) Regulatory Policies and Procedures (44 FR 11034; February 26, 1979); and (3) does not warrant preparation of a regulatory evaluation as the anticipated impact is so minimal. Since this is a routine matter that only affects air traffic procedures and air navigation, it is certified that this rule, when promulgated, does not have a significant economic impact on a substantial number of small entities under the criteria of the Regulatory Flexibility Act.

Environmental Review

The FAA has determined that this action of amending VOR Federal airways V–5 and V–178, and removing V–513, due to the planned decommissioning of the VOR portion of the New Hope, KY, VOR/DME NAVAID, qualifies for categorical exclusion under the National Environmental Policy Act and its implementing regulations at 40 CFR part 1500, and in accordance with FAA Order 1050.1F, Environmental Impacts: Policies and Procedures, paragraph 5–6.5a, which categorically excludes from further environmental impact review rulemaking actions that designate or modify classes of airspace areas, airways, routes, and reporting points (see 14 CFR part 71, Designation of Class A, B, C, D, and E Airspace Areas; Air Traffic Service Routes; and Reporting Points). As such, this action is not expected to result in any potentially significant environmental impacts. In accordance with FAA Order 1050.1F, paragraph 5–2 regarding Extraordinary Circumstances, the FAA has reviewed this action for factors and circumstances in which a normally categorically excluded action may have a significant environmental impact requiring further analysis. The FAA has determined that no extraordinary circumstances exist that warrant preparation of an environmental assessment or environmental impact study.

List of Subjects in 14 CFR Part 71

Airspace, Incorporation by reference, Navigation (air).

Adoption of the Amendment

In consideration of the foregoing, the Federal Aviation Administration amends 14 CFR part 71 as follows:

PART 71—DESIGNATION OF CLASS A, B, C, D, AND E AIRSPACE AREAS; AIR TRAFFIC SERVICE ROUTES; AND REPORTING POINTS

■ 1. The authority citation for part 71 continues to read as follows:

Authority: 49 U.S.C. 106(f), 106(g); 40103, 40113, 40120; E.O. 10854, 24 FR 9565, 3 CFR, 1959–1963 Comp., p. 389.

§ 71.1 [Amended]

■ 2. The incorporation by reference in 14 CFR 71.1 of FAA Order 7400.11E, Airspace Designations and Reporting Points, dated July 21, 2020, and effective September 15, 2020, is amended as follows:

Paragraph 6010(a) Domestic VOR Federal Airways.

* * * * *

V–5 [Amended]

From Pecan, GA; Vienna, GA; Dublin, GA; Athens, GA; INT Athens 340° and Electric City, SC, 274° radials; INT Electric City 274° and Choo Choo, TN, 127° radials; to Choo Choo. From Louisville, KY; Cincinnati, OH; to Appleton, OH.

* * * * *

V–178 [Amended]

From Hallsville, MO; INT Hallsville 183° and Vichy, MO, 321° radials; Vichy; to Farmington, MO. From Lexington, KY; to Bluefield, WV.

* * * * *

V–513 [Removed]

* * * * *

Issued in Washington, DC, on October 17, 2020.

Scott M. Rosenbloom,

Acting Manager, Rules and Regulations Group.

[FR Doc. 2020–23377 Filed 10–23–20; 8:45 am]

BILLING CODE 4910–13–P

ENVIRONMENTAL PROTECTION AGENCY

40 CFR Part 52

[EPA–R01–OAR–2020–0178; EPA–R01–OAR–2017–0344; FRL–10015–24–Region 1]

Air Plan Approval; New Hampshire; Infrastructure State Implementation Plan Requirements for the 2015 Ozone and 2012 $PM_{2.5}$ Standards

AGENCY: Environmental Protection Agency (EPA).

ACTION: Final rule and correcting amendments.

SUMMARY: The Environmental Protection Agency (EPA) is approving a State Implementation Plan (SIP) revision submitted by the State of New Hampshire that addresses the infrastructure requirements of the Clean Air Act (CAA or Act), excluding the interstate transport provisions, for the 2015 ozone National Ambient Air Quality Standards (NAAQS). We are also granting the state an exemption from the infrastructure SIP contingency plan obligation for ozone and are conditionally approving several elements of New Hampshire's submittal relating to air-quality modeling requirements. In addition, we are correcting errors in our previous approval of an infrastructure SIP submission from New Hampshire for the 2012 $PM_{2.5}$ NAAQS and conditionally approving several elements of that submittal. The infrastructure requirements are designed to ensure that the structural components of each state's air-quality management program, including provisions prohibiting emissions that will have certain adverse air-quality effects in other states, are adequate to meet the state's responsibilities under the CAA. This action is being taken in accordance with the Clean Air Act.

DATES: This rule is effective on November 25, 2020.

ADDRESSES: EPA has established a docket for this action under Docket Identification No. EPA–R01–OAR–2020–0178. All documents in the docket are listed on the *https://www.regulations.gov* website. Although listed in the index, some information is not publicly available, *i.e.,* CBI or other information whose disclosure is restricted by statute. Certain other material, such as copyrighted material, is not placed on the internet and will be publicly available only in hard copy form. Publicly available docket materials are available at *https://www.regulations.gov* or at the U.S. Environmental Protection Agency, EPA Region 1 Regional Office, Air and Radiation Division, 5 Post Office Square—Suite 100, Boston, MA. EPA requests that if at all possible, you contact the contact listed in the **FOR FURTHER INFORMATION CONTACT** section to schedule your inspection. The Regional Office's official hours of business are Monday through Friday, 8:30 a.m. to 4:30 p.m., excluding legal holidays and facility closures due to COVID–19.

FOR FURTHER INFORMATION CONTACT: Alison C. Simcox, Air Quality Branch, U.S. Environmental Protection Agency, EPA Region 1, 5 Post Office Square—Suite 100, (Mail code 05–2), Boston, MA 02109–3912, tel. (617) 918–1684, email *simcox.alison@epa.gov.*

SUPPLEMENTARY INFORMATION: Throughout this document whenever ''we,'' ''us,'' or ''our'' is used, we mean EPA.

Table of Contents

I. Background and Purpose
II. Final Action
III. Statutory and Executive Order Reviews

I. Background and Purpose

On August 4, 2020, EPA published a Notice of Proposed Rulemaking (NPRM) to approve most elements of a New Hampshire SIP revision addressing the infrastructure requirements of the Clean Air Act (CAA or Act)—excluding the interstate transport provisions—for the 2015 ozone National Ambient Air Quality Standards (NAAQS). This NPRM also proposed to grant the state an exemption from the infrastructure SIP contingency plan obligation for ozone, and to correct errors and conditionally approve several elements in our previous approval of an infrastructure SIP submission from New Hampshire for the 2012 $PM_{2.5}$ NAAQS. New Hampshire submitted the formal SIP revision for the 2015 ozone NAAQS on September 5, 2018, and the formal SIP revision for the 2012 $PM_{2.5}$ NAAQS on December 22, 2015. The rationale for EPA's proposed action is given in the NPRM and will not be restated here. EPA received no germane public comments on the NPRM.

II. Final Action

EPA is approving most elements of New Hampshire's September 5, 2018, infrastructure SIP submission for the 2015 ozone NAAQS—excluding the provisions of the SIP submittal addressing section 110(a)(2)(D)(i)(I) (*i.e.,* the ''Good Neighbor'' or ''transport'' provisions)—as a revision to the New Hampshire SIP. We are conditionally approving the SIP submittal for section 110(a)(2)(K) (Air quality modeling and data) and for the PSD-related requirements of sections 110(a)(2)(C), (D)(i)(II), and (J). We are also granting the state an exemption from the infrastructure SIP contingency plan obligation for ozone.

In addition, we are correcting errors and conditionally approving several elements in our previous approval of an infrastructure SIP submitted by New Hampshire on December 22, 2015, for the 2012 $PM_{2.5}$ NAAQS. Specifically, we are conditionally approving the 2015 SIP submittal for section 110(a)(2)(K) and replacing approvals of the 2015 SIP submittal for the PSD-related requirements of sections 110(a)(2)(C), (D)(i)(II), and (J) with conditional approvals.

The State must submit to EPA by October 26, 2021 the revisions to New Hampshire Part Env-A 619.03, *PSD Program Requirements* needed to fully approve the conditionally approved elements of the September 2018 and December 2015 infrastructure SIP submissions.

If the State fails to do so, this approval will become a disapproval on that date. EPA will notify the State by letter that this action has occurred. At that time, this commitment will no longer be a part of the approved New Hampshire SIP. EPA subsequently will publish a notice in the **Federal Register** notifying the public that the conditional approvals automatically converted to disapprovals. If the State meets its commitment, within the applicable time frame, the conditionally approved submissions will remain a part of the SIP until EPA takes final action approving or disapproving the necessary SIP revision. If EPA disapproves the new submittal(s), the conditional approvals of the infrastructure 2015 and 2018 SIP submissions from New Hampshire for the 2015 ozone and 2012 $PM_{2.5}$ NAAQS for section 110(a)(2)(K) and the PSD-related requirements of sections 110(a)(2)(C), 110(a)(2)(D)(i)(II), and 110(a)(2)(J) will also be disapproved at that time. If EPA approves the submittal(s) for section 110(a)(2)(K) and the revised PSD-related requirements of section 110(a)(2)(D)(i)(II), 110(a)(2)(C), and 110(a)(2)(J), the infrastructure SIP submissions from New Hampshire for the 2015 ozone and 2012 $PM_{2.5}$ NAAQS will be fully approved in their entirety

and will replace the conditionally approved elements in the SIP.

If the conditional approval is converted to a disapproval, such action will trigger EPA's authority to impose sanctions under section 110(m) of the CAA at the time EPA issues the final disapproval or on the date the State fails to meet its commitment. In this situation, EPA will notify the State by letter that the conditional approval has been converted to a disapproval and that EPA's sanctions authority has been triggered. In addition, the final disapproval triggers the Federal implementation plan (FIP) requirement under section 110(c).

III. Statutory and Executive Order Reviews

Under the Clean Air Act, the Administrator is required to approve a SIP submission that complies with the provisions of the Act and applicable Federal regulations. 42 U.S.C. 7410(k); 40 CFR 52.02(a). Thus, in reviewing SIP submissions, EPA's role is to approve state choices, provided that they meet the criteria of the Clean Air Act. Accordingly, this action merely approves state law as meeting Federal requirements and does not impose additional requirements beyond those imposed by state law. For that reason, this action:

- Is not a significant regulatory action subject to review by the Office of Management and Budget under Executive Orders 12866 (58 FR 51735, October 4, 1993) and 13563 (76 FR 3821, January 21, 2011);
- Is not an Executive Order 13771 regulatory action because this action is not significant under Executive Order 12866;
- Does not impose an information collection burden under the provisions of the Paperwork Reduction Act (44 U.S.C. 3501 *et seq.*);
- Is certified as not having a significant economic impact on a substantial number of small entities under the Regulatory Flexibility Act (5 U.S.C. 601 *et seq.*);
- Does not contain any unfunded mandate or significantly or uniquely affect small governments, as described in the Unfunded Mandates Reform Act of 1995 (Pub. L. 104–4);
- Does not have federalism implications as specified in Executive Order 13132 (64 FR 43255, August 10, 1999);
- Is not an economically significant regulatory action based on health or safety risks subject to Executive Order 13045 (62 FR 19885, April 23, 1997);
- Is not a significant regulatory action subject to Executive Order 13211 (66 FR 28355, May 22, 2001);
- Is not subject to requirements of Section 12(d) of the National Technology Transfer and Advancement Act of 1995 (15 U.S.C. 272 note) because application of those requirements would be inconsistent with the Clean Air Act; and
- Does not provide EPA with the discretionary authority to address, as appropriate, disproportionate human health or environmental effects, using practicable and legally permissible methods, under Executive Order 12898 (59 FR 7629, February 16, 1994).

In addition, the SIP is not approved to apply on any Indian reservation land or in any other area where EPA or an Indian tribe has demonstrated that a tribe has jurisdiction. In those areas of Indian country, the rule does not have tribal implications and will not impose substantial direct costs on tribal governments or preempt tribal law as specified by Executive Order 13175 (65 FR 67249, November 9, 2000).

The Congressional Review Act, 5 U.S.C. 801 *et seq.,* as added by the Small Business Regulatory Enforcement Fairness Act of 1996, generally provides that before a rule may take effect, the agency promulgating the rule must submit a rule report, which includes a copy of the rule, to each House of the Congress and to the Comptroller General of the United States. EPA will submit a report containing this action and other required information to the U.S. Senate, the U.S. House of Representatives, and the Comptroller General of the United States prior to publication of the rule in the **Federal Register**. A major rule cannot take effect until 60 days after it is published in the **Federal Register**. This action is not a ''major rule'' as defined by 5 U.S.C. 804(2).

Under section 307(b)(1) of the Clean Air Act, petitions for judicial review of this action must be filed in the United States Court of Appeals for the appropriate circuit by December 28, 2020. Filing a petition for reconsideration by the Administrator of this final rule does not affect the finality of this action for the purposes of judicial review nor does it extend the time within which a petition for judicial review may be filed, and shall not postpone the effectiveness of such rule or action. This action may not be challenged later in proceedings to enforce its requirements. (See section 307(b)(2).)

List of Subjects in 40 CFR Part 52

Environmental protection, Air pollution control, Carbon monoxide, Incorporation by reference, Intergovernmental relations, Lead, Nitrogen dioxide, Ozone, Particulate matter, Reporting and recordkeeping requirements, Sulfur oxides, Volatile organic compounds.

Dated: September 24, 2020.

Dennis Deziel,

Regional Administrator, EPA Region 1.

For the reasons stated in the preamble, the EPA amends 40 CFR part 52 as follows:

PART 52—APPROVAL AND PROMULGATION OF IMPLEMENTATION PLANS

■ 1. The authority citation for part 52 continues to read as follows:

Authority: 42 U.S.C. 7401 *et seq.*

Subpart EE—New Hampshire

■ 2. In § 52.1520 amend the table in paragraph (e) by:

■ a. Revising the entry for ''Submittals to meet Section 110(a)(2) Infrastructure Requirements for the 2012 $PM_{2.5}$ NAAQS,''; and

■ b. Adding entries for ''Submittal to meet Section 110(a)(2) Infrastructure Requirements for the 2015 Ozone NAAQS,'' and ''Request for exemption from contingency plan obligation'' at the end of the table.

Revision and additions to read as follows:

§ 52.1520 Identification of plan.

* * * * *

(e) *Nonregulatory.*

NEW HAMPSHIRE NONREGULATORY

Name of nonregulatory SIP provision	Applicable geographic or nonattainment area	State submittal date/ effective date	EPA approved date	Explanations
*	*	* *	*	* *
Submittals to meet Section 110(a)(2) Infrastructure Requirements for the 2012 $PM_{2.5}$ NAAQS.	Statewide	12/22/2015; supplement submitted 6/8/2016.	12/4/2018, 83 FR 62464	These submittals are approved with respect to the following CAA requirements: 110(a)(2)(A), (B), (C), (D), (E), (F), (G), (H), (J), (L), and (M).
		12/22/2015	[Insert **Federal Register** citation].	This submittal is conditionally approved with respect to provisions of CAA 110(a)(2)(K). The following previously approved items are corrected and changed from approval to conditional approval: 110(a)(C) (PSD only), (D)(i)(II) (prong 3 only), and (J) (PSD only).
*	*	* *	*	* *
Submittal to meet Section 110(a)(2) Infrastructure Requirements for the 2015 Ozone NAAQS.	Statewide	9/5/2018	[Insert **Federal Register** citation].	This submittal is approved with respect to the following CAA requirements: 110(a)(2)(A), (B), (C) (except PSD), (D)(i)(II) (except prong 3), (D)(ii), (E), (F), (G), (H), (J) (except PSD), (L), and (M), and conditionally approved for the following CAA requirements: 110(a)(2)(K) and (C) (PSD only), (D)(i)(II) (prong 3 only), and (J) (PSD only).
Request for exemption from contingency plan obligation for 2015 ozone NAAQS.	Merrimack Valley—Southern New Hampshire AQCR.	9/5/2018	[Insert **Federal Register** citation].	State's request for exemption from contingency plan obligation, made pursuant to 40 CFR 51.152(d)(1), is granted.

[FR Doc. 2020–21809 Filed 10–23–20; 8:45 am]

BILLING CODE 6560–50–P

ENVIRONMENTAL PROTECTION AGENCY

40 CFR Part 52

[EPA–R08–OAR–2019–0642; FRL–10014–86–Region 8]

Air Quality State Implementation Plans; Approval and Promulgation of Implementation Plans; South Dakota; Infrastructure Requirements for the 2015 Ozone National Ambient Air Quality Standards; Revisions to Administrative Rules

AGENCY: Environmental Protection Agency (EPA).

ACTION: Final rule.

SUMMARY: The Environmental Protection Agency (EPA) is approving the State of South Dakota's January 15, 2020, State Implementation Plan (SIP) submission that addresses infrastructure requirements for the 2015 ozone National Ambient Air Quality Standards (NAAQS). Additionally, in this action, we are approving a SIP revision submitted by the State of South Dakota on January 3, 2020, that revises the Administrative Rules of South Dakota (ARSD), Air Pollution Control Program, updating the date of incorporation by reference of federal rules in ARSD chapters pertaining to definitions, ambient air quality, air quality episodes, Prevention of Significant Deterioration (PSD), new source review, performance testing, control of visible emissions, continuous emission monitoring systems, State facilities in Rapid City area, construction permits and regional haze program administrative rules. The EPA is taking this action pursuant to the Clean Air Act (CAA).

DATES: This rule is effective on November 25, 2020.

ADDRESSES: The EPA has established a docket for this action under Docket ID No. EPA–R08–OAR–2019–0642. All documents in the docket are listed on the *http://www.regulations.gov* website. Although listed in the index, some information is not publicly available, *e.g.,* CBI or other information whose disclosure is restricted by statute. Certain other material, such as copyrighted material, is not placed on the internet and will be publicly available only in hard copy form. Publicly available docket materials are available through *http://www.regulations.gov,* or please contact the person identified in the **FOR FURTHER INFORMATION CONTACT** section for additional availability information.

FOR FURTHER INFORMATION CONTACT: Kate Gregory, telephone number: (303) 312–6175, email address: *gregory.kate@epa.gov.* Mail can be directed to the Air and Radiation Division, U.S. EPA, Region 8, Mail-code 8ARD–QP, 1595 Wynkoop Street, Denver, Colorado 80202–1129.

SUPPLEMENTARY INFORMATION: Throughout this document ''we,'' ''us,'' and ''our'' means the EPA.

I. Background

On March 12, 2008, the EPA promulgated a new NAAQS for ozone, revising the levels of primary and secondary 8-hour ozone standards from 0.08 parts per million (ppm) to 0.075 ppm (73 FR 16436). More recently, on October 1, 2015, the EPA promulgated and revised the NAAQS for ozone, further strengthening the primary and secondary 8-hour standards to 0.070 ppm (80 FR 65292). The October 1, 2015 standards are known as the 2015 ozone NAAQS.

Section 110(a)(1) of the CAA directs each state to make an infrastructure SIP submission to the EPA within 3 years of promulgation of a new or revised NAAQS. Infrastructure requirements for SIPs are provided in section 110(a)(1) and (2) of the CAA. Section 110(a)(2) lists the specific infrastructure elements that a state's infrastructure SIP submission must address, as applicable. The state's infrastructure SIP submission must establish that the state's existing SIP meets the applicable requirements or make revisions to satisfy those requirements as necessary. The elements that are the subject of this action are described in detail in our notice of proposed rulemaking (NPRM) published on May 19, 2020 (85 FR 29882) for South Dakota's infrastructure SIP submission, submitted to the EPA on January 15, 2020, and SIP revisions to the ARSD submitted to the EPA on January 3, 2020.

II. Response to Comments

Comments on our NPRM were due on or before June 18, 2020. The EPA

received four comments. The first comment was supportive of the proposed action. We summarize and respond to all other significant adverse comments below.

Comments: One commenter contends that our May 19, 2020 South Dakota infrastructure SIP NPRM is a ''blatantly illegal rule'' which should be retracted and disapproved because the EPA has ignored ''the courts,'' specifically the May 19, 2020 decision of the D.C. Circuit Court of Appeals in *Maryland* v. *EPA*.[1] The commenter contests the EPA's use of 2023 as the analytic year for evaluation of South Dakota's ''Good Neighbor'' obligations for the 2015 ozone NAAQS,[2] which the agency based on its interpretation of the relevant holding in *Wisconsin* v. *EPA* regarding the appropriate timeframes for analysis and implementation of Good Neighbor obligations.[3] Commenter maintains that the 2021 Marginal attainment year for the 2015 ozone NAAQS is the correct analytical year per the *Maryland* decision.

Similarly, another commenter alleges that EPA cannot approve the South Dakota infrastructure SIP submission ''as it relates to the good neighbor provision because it relies on the flawed modeling,'' and thus the EPA should disapprove it because the State relied on the wrong analysis. The commenter asserts that, ''courts have opined several times that 2023 is the improper year to evaluate for downwind contributions'' and the EPA must disapprove South Dakota's SIP submission due to 2021 being the correct analytical year to evaluate for Good Neighbor downwind contributions.

The commenter further argues that the Good Neighbor provision require states to perform the modeling analysis themselves, and thus because the EPA cannot perform the analysis for the State, that the EPA consequently cannot supplement South Dakota's infrastructure SIP submission with ''new manufactured'' modeling to support approval of the proposal. The commenter also asserts that if the EPA were to ''fix'' the modeling for the State, EPA must then disapprove the State's infrastructure SIP submission and promulgate a Federal Implementation Plan (FIP).

Response: The commenters are referring to recent D.C. Circuit court decisions addressing, in part, the issue of the relevant analytic year for the purposes of evaluating interstate ozone transport under the Good Neighbor provision, CAA section 110(a)(2)(D)(i)(I). On September 13, 2019, the D.C. Circuit issued a decision in *Wisconsin* v. *EPA,* remanding the Cross-State Air Pollution Rule (''CSAPR'') Update[4] to the extent that Good Neighbor FIPs in the CSAPR Update did not fully eliminate upwind states' ''significant contribution'' by the next applicable attainment date[5] by which downwind states must attain the 2008 ozone NAAQS. *See* 938 F.3d at 313. The EPA had interpreted that holding as limited to the attainment dates for Moderate or higher classifications under CAA section 181 on the basis that Marginal nonattainment areas have reduced planning requirements and other considerations. *See, e.g.,* 85 FR 29882, 29888–89 (May 19, 2020).

On May 19, 2020, the D.C. Circuit in *Maryland* v. *EPA,* applying the *Wisconsin* decision, held that the EPA must assess the impacts of interstate transport on air quality at the next downwind attainment date, including Marginal area attainment dates, in evaluating the basis for EPA's denial of a petition under CAA section 126(b). 958 F.3d at 1203–04. The EPA signed the NPRM proposing approval of South Dakota's Good Neighbor SIP prior to the D.C. Circuit's decision in *Maryland.* In accordance with the *Maryland* decision, the Agency now, in taking this final action approving the South Dakota SIP, considers the Marginal area attainment date[6] as the relevant analytic year for the purposes of determining whether sources in South Dakota will significantly contribute to downwind nonattainment or interfere with maintenance of the 2015 ozone NAAQS in any other states.[7]

EPA disagrees with the commenters' assertion that this change in analysis means EPA must disapprove South Dakota's infrastructure SIP submission as it pertains to the Good Neighbor provision. As an initial matter, in regard to the comment that South Dakota must conduct its own air quality analysis, EPA has authority and indeed an obligation to take into consideration any relevant information in the record, including its own air quality modeling analysis, to determine how to act on a SIP submission. Here, the State had concluded in its infrastructure SIP submission that it has no emissions reduction obligations for purposes of section 110(a)(2)(D)(i)(I), on the basis that its emissions are not linked to any nonattainment or maintenance receptors, remains approvable. Specifically, relying in part on the same data that informed its analysis of the year 2023, the EPA finds it reasonable to conclude that the impacts from emissions from South Dakota will not exceed a contribution threshold of 1 percent of the 2015 ozone NAAQS to any downwind nonattainment and maintenance sites in 2021. This finding is sufficient basis for EPA to conclude that South Dakota is not linked to any downwind receptors at step 2 of the four-step interstate transport framework.[8]

South Dakota's January 15, 2020 infrastructure SIP submission includes an interstate ozone transport analysis for the Good Neighbor provision that focused on the modeling information provided in the EPA's March 2018 memorandum,[9] which used 2023 as the analytic year (corresponding with the

[1] *Maryland* v. *EPA,* 958 F.3d 1185 (D.C. Cir. 2020).

[2] CAA section 110(a)(2)(D)(i)(I) is colloquially referred to as the ''Good Neighbor'' provision.

[3] *Wisconsin* v. *EPA,* 938 F.3d 303, 313–320 (D.C. Cir. 2019).

[4] 81 FR 74504 (October 26, 2016).

[5] *See* CAA 181(a); 40 CFR 51.1303.

[6] The attainment date for nonattainment areas classified as Marginal for the 2015 ozone NAAQS is August 3, 2021. *See* CAA 181(a); 40 CFR 51.1303; 83 FR 25776 (June 4, 2018).

[7] We note that the court in *Maryland* did not have occasion to evaluate circumstances in which EPA may determine that an upwind linkage to a downwind air quality problem exists at steps 1 and 2 of the four-step Good Neighbor framework by a particular attainment date, but for reasons of impossibility or profound uncertainty the Agency is unable to mandate upwind pollution controls by that date. *See* 938 F.3d at 319–320. The D.C. Circuit noted in *Wisconsin* that upon a sufficient showing, these circumstances may warrant a certain degree of flexibility in effectuating the implementation of the Good Neighbor provision. *Id.* Such circumstances are not at issue in the present action.

[8] Thus, it is not necessary for the EPA to proceed to evaluate whether the state's infrastructure SIP submission may also be approvable using an alternative contribution threshold of 1 ppb. The EPA released a memorandum in August 2018 which indicates that, based on the EPA's analysis of its most recent modeling data, the amount of upwind collective contribution capture using a 1 ppb threshold is generally comparable, overall, to the amount captured using a threshold equivalent to 1 percent of the 2015 ozone NAAQS. Accordingly, the EPA indicated that it may be reasonable and appropriate for states to use a 1 ppb contribution threshold, as an alternative to the 1 percent threshold, at step 2 of the four-step Good Neighbor framework in developing their SIP revisions addressing the Good Neighbor provision for the 2015 ozone NAAQS. *See* Analysis of Contribution Thresholds for Use in Clean Air Act Section 110(a)(2)(D)(i)(I) Interstate Transport State Implementation Plan Submissions for the 2015 Ozone National Ambient Air Quality Standards, August 31, 2018, available in the docket for this action or at *https://www.epa.gov/airmarkets/memo-and-supplemental-information-regarding-interstate-transport-sips-2015-ozone-naaqs.*

[9] Information on the Interstate Transport State Implementation Plan Submissions for the 2015 Ozone National Ambient Air Quality Standards under Clean Air Act Section 110(a)(2)(D)(i)(I), March 27, 2018, available in the docket for this action or at *https://www.epa.gov/interstate-air-pollution-transport/memos-and-notices-regarding-interstate-air-pollution-transport.*

2024 Moderate area attainment date).[10] Based on the contribution modeling included in the March 2018 memorandum, the EPA concludes that South Dakota's largest impact on any downwind nonattainment or maintenance receptors in 2023 are 0.07 parts per billion (ppb) and 0.05 ppb, respectively.[11] These values are both far less than 1 percent of the 2015 ozone NAAQS (0.70 ppb). In response to these comments and the *Maryland* decision, using the best available information (including the same data that informed EPA's 2023 modeling) to analyze South Dakota's air quality impacts in the year 2021, the EPA finds it reasonable to conclude that South Dakota's impact on any potential downwind nonattainment and maintenance receptor in 2021 would be similar to those projected in 2023, and likewise well below 1 percent of the 2015 ozone NAAQS, as detailed in the methodology described below. Therefore, EPA finds that South Dakota's infrastructure SIP submission satisfies the State's Good Neighbor obligations for the 2015 ozone NAAQS.

The EPA's analysis of receptors and contributions in 2021 relies in part on the 2023 modeling used in the NPRM of this action, the results of which were included with the March 2018 memorandum. These data are the most recent published applicable modeling data available at the time of this final action. To estimate South Dakota's maximum contribution to a nonattainment or maintenance receptor in 2021, EPA developed an interpolation analysis that evaluates available modeling, monitoring, and emissions data to assess air quality in this year. In general, this analysis utilizes 2019 measured design values[12] and 2023 modeled design values to estimate design values at each monitoring site in 2021. Specifically, 2021 average and maximum design values were calculated by straight-line linear interpolation between the 2019 measured data and the 2023 modeled data. EPA believes that the linear interpolation methodology using measured data and 2023 model projections provides a technically sound basis for estimation of ozone design values in 2021 in part because of the relatively short two-year span between 2021 and 2023.

EPA calculated ozone contributions in 2021 by applying the following two-step process. First, the contributions (in ppb) from each state to each monitoring site in 2023 were converted to a fractional portion of the 2023 average design value by dividing the contribution by the 2023 design value. In the second step, the resulting contribution fractions were multiplied by the estimated 2021 average design value to produce 2021 contributions from each state to each monitoring site.[13] [14]

The 2021 design values and contributions were examined to determine if South Dakota contributes at or above the 1 percent of the 2015 ozone NAAQS threshold (0.70 ppb) to a downwind nonattainment or maintenance receptor. The data indicate that the highest contribution in 2021 from South Dakota to a downwind receptor is 0.14 ppb to the nonattainment receptor site in Cook County, Illinois.[15] Based on this analysis, EPA finds it reasonable to conclude that South Dakota will contribute less than 1 percent of the 2015 ozone NAAQS to any potential nonattainment or maintenance receptors in 2021.

EPA also analyzed ozone precursor emissions trends in South Dakota to support the findings from the air quality analysis. In evaluating emissions trends, we focused on State-wide emissions of nitrogen oxides (''NO_X'') and volatile organic compounds (''VOCs'') in South Dakota.[16] [17] Emissions from mobile sources, electric generating units (''EGUs''), industrial facilities, gasoline vapors, and chemical solvents are some of the major anthropogenic sources of ozone precursors. This evaluation looks at both past emissions trends, as well as projected trends.

As shown in Table 1, between 2011 and 2017, annual total NO_X and VOC emissions have declined, by 32 percent and 9 percent, respectively. The projected reductions are a result of ''on the books'' and ''on the way'' regulations that will continue to decrease NO_X and VOC emissions in South Dakota, as indicated by our 2023 projected emissions. The large decrease in NO_X emissions between 2017 emissions and projected 2023 emissions in South Dakota are primarily driven by reductions in emissions from on-road and nonroad vehicles. EPA projects that the downward trend in both VOC and NO_X emissions from 2011 through 2017 is expected to continue at a steady rate out to 2023 and further into the future due to the replacement of higher emissions vehicles with lower emitting vehicles as a result of several mobile source control programs.[18] This downward trend in emissions in South Dakota adds support to the air quality analysis presented above, which indicates that the contributions from emissions from sources in South Dakota to ozone in downwind states will continue to decline and remain below 1 percent of the NAAQS.

[10] The year 2023 was used as the analytic year because that year aligns with the expected attainment year for Moderate ozone nonattainment areas. The attainment date for nonattainment areas classified as Moderate for the 2015 ozone NAAQS is August 3, 2024. *See* CAA 181(a); 40 CFR 51.1303; 83 FR 25776 (June 4, 2018).

[11] The EPA's analysis indicates that South Dakota will have a 0.07 ppb impact at the nonattainment receptor in Tarrant County, Texas (Site ID 484392003), which has a 2023 projected average design value of 72.5 ppb, and a 2023 projected maximum design value of 74.8 ppb. The EPA's analysis further indicates that South Dakota will have a 0.05 ppb impact at the maintenance receptors in Allegan, Michigan (Site ID 260050003) and Queens, New York (Site ID 360810124), which both had projected 2023 average design values below the 2015 ozone NAAQS (69.0 and 70.2 ppb, respectively), and 2023 projected maximum design values above the NAAQS (71.7 and 72.0 ppb, respectively). See the March 2018 memorandum, attachment C.

[12] The 2019 design values at each monitoring site nationwide are available at *https://www.epa.gov/air-trends/air-quality-design-values.*

[13] Note that the method used here for calculating contributions in 2021 is similar to the method used by EPA to calculate the 2023 contributions from 2023 air quality modeling.

[14] Design values for 2019, 2021, and 2023 along with the contributions in 2021 and 2023 are provided in a file in the docket for this rule.

[15] This downwind receptor site has Air Quality System (AQS) monitoring ID #170310001 and is located in Cook County, Illinois.

[16] This is because ground-level ozone is not emitted directly into the air but is a secondary air pollutant created by chemical reactions between ozone precursors, chiefly NO_X and non-methane VOCs, in the presence of sunlight.

[17] 81 FR 74504, 74513–14.

[18] Tier 3 Standards (March 2014), the Light-Duty Greenhouse Gas Rule (March 2013), Heavy (and Medium)-Duty Greenhouse Gas Rule (August 2011), the Renewable Fuel Standard (February 2010), the Light Duty Greenhouse Gas Rule (April 2010), the Corporate-Average Fuel Economy standards for 2008–2011 (April 2010), the 2007 Onroad Heavy-Duty Rule (February 2009), and the Final Mobile Source Air Toxics Rule (MSAT2) (February 2007).

TABLE 1—ANNUAL EMISSIONS OF NO_X AND VOC FROM ANTHROPOGENIC EMISSION SOURCES IN SOUTH DAKOTA

[tons]

	2011	2012	2013	2014	2015	2016	2017	Projected 2023
NO_X	73,995	71,438	68,881	66,323	56,548	52,664	50,590	34,096
VOC	66,430	64,229	62,028	59,826	58,873	57,627	56,528	51,313

Thus, the EPA concludes the air quality and emission analyses indicate that emissions from South Dakota will not significantly contribute to nonattainment or interfere with maintenance of the 2015 ozone NAAQS in any other state in 2021. Therefore, EPA concludes that South Dakota's infrastructure SIP submission satisfies the State's Good Neighbor obligations for the 2015 ozone NAAQS.

Comment: One commenter asserts that the EPA should not approve South Dakota's infrastructure SIP submission with respect to PSD requirements because the Agency isn't required to do so under current rules. The commenter seems to allege that South Dakota's PSD program is under consideration at the time of the proposed action and there will be legal challenges regarding the approval of construction permits. Additionally, the commenter alleges that the EPA should 'evaluate the strength of the S.D. permit program and its financial health.'

Response: The EPA disagrees with the commenter. The commenters' concerns appear to be directed not to whether the existing SIP for South Dakota meets the relevant structural requirements for PSD programs, but rather to whether South Dakota is in fact faithfully implementing the existing provisions of its EPA-approved SIP. As the EPA has explained in other infrastructure SIP actions, comments like these highlight an important distinction between whether an infrastructure SIP submission meets the applicable requirements of the CAA on its face (*i.e.,* pertain to the facial sufficiency of the state's SIP), and whether a state is actually complying with the requirements of that SIP (*i.e.,* pertain to adequacy of the state's implementation of the SIP).[19] This comment implicates the question of the degree to which implementation concerns are relevant in the context of acting on a state's infrastructure SIP submission. In the context of an infrastructure SIP submission, the EPA interprets the requirements of section 110(a)(1) and (2) to require the Agency to focus on whether the state has a SIP that provides the requisite legal framework for implementation, maintenance and enforcement of the NAAQS. Generally speaking, the EPA's review of infrastructure SIP submissions is limited to whether, pursuant to CAA section 110(a)(2), the submission facially meets the requirements of the statutory criteria outlined therein, as applicable. In the case of section 110(a)(2)(C), for example, the statute requires a state to have a SIP that ''include[s] a program to provide for . . . regulation of the modification and construction of any stationary sources . . . including a permit program as required in parts C and D of this subchapter.'' Thus, the EPA reviews a state's infrastructure SIP submission to assure that the structural elements of the state's PSD permitting program meets current CAA requirements for such programs.

This is not to say that the EPA has no role in reviewing whether a state is faithfully implementing its approved SIP, or otherwise complying with the CAA and its implementing regulations. To the contrary, there are multiple statutory tools that the EPA can use to rectify problems with a state's implementation of its SIP, and the existence of these tools is consistent with the EPA's interpretation of section 110(a)(2) with respect to the Agency's role in reviewing infrastructure SIP submissions. For example, the CAA provides the EPA the authority to issue a SIP call, 42 U.S.C. 7410(k)(5); make a finding of failure to implement, *id.* sections 7410(m), 7509(a)(4); and take measures to address specific permits pursuant to the EPA's case-by-case permitting oversight. *See, e.g.,* sections 7475(a)(2); 7477. The appropriateness of employing these authorities depends on the nature and extent of the particular implementation problems at issue.

With respect to South Dakota's infrastructure SIP submission, the EPA analyzed the submission itself, and evaluated the text of its provisions for compliance with the relevant elements of section 110(a)(2). The EPA has evaluated the State's submission on a requirement-by-requirement basis and explained its views on the adequacy of the State's SIP for purposes of meeting the infrastructure SIP requirements.

The EPA appreciates and takes seriously the commenters' assertions that the Agency should evaluate the strength of the South Dakota permit program in the SIP as approved by the EPA. However, because this action involves a review of the infrastructure SIP submission itself, the EPA is not evaluating the merits of assertions concerning implementation of the SIP in the context of this action. At this time, the EPA is finalizing its proposed approval of the infrastructure SIP submission that is currently before the Agency. If the EPA later determines that there are indeed concerns with respect to the implementation of the PSD program in South Dakota, the Agency intends to take appropriate action to ensure those problems are rectified using whatever statutory tools are appropriate to the implementation problem identified.

With respect to the requirements related to PSD relevant to this approval of the infrastructure SIP submission, the EPA has determined that the State's SIP as previously approved, meets the relevant structural requirements for purposes of PSD in section 110(a)(2)(C), (D)(i)(II) element 3, and (J). Some examples of these basic structural SIP requirements include having state law authority to implement the SIP, an overarching permitting program in place, and a properly deployed monitoring network. As to the PSD program in particular, these basic structural requirements include those provisions necessary for the permitting program to address all regulated NSR pollutants and the proper sources. The EPA considers action on the infrastructure SIP submissions required by section 110(a)(1) and (2) to be an evaluation of a state's SIP to assure that it meets the basic structural requirements for the new or revised NAAQS, not a time to address all potential substantive defects in existing SIP provisions, or alleged defects in implementation of the SIP.

The EPA concludes that South Dakota's infrastructure SIP submission satisfies the State's obligations for the 2015 ozone NAAQS with respect to PSD program requirements.

[19] See ''Approval and Disapproval and Promulgation of Implementation Plans; Texas; Infrastructure and Interstate Transport Requirements of the 1997 Ozone and the 1997 and 2006 $PM_{2.5}$ NAAQS,'' 76 FR 81371 (Dec. 28, 2011).

III. Final Action

In this rulemaking, we are approving multiple elements of the infrastructure SIP requirements for the 2015 ozone NAAQS for South Dakota along with approving revisions to the ARSD, Air Pollution Control Program. The actions we are approving are contained in Table 1 below.

The EPA is approving South Dakota's January 15, 2020 SIP submission that addresses infrastructure requirements for the 2015 ozone NAAQS SIP submission for the following CAA section 110(a)(2) infrastructure elements: (A), (B), (C), (D)(i)(I) Prongs 1 and 2, (D)(i)(II) Prong 3, (D)(i)(II) Prong 4, (D)(ii), (E), (F), (G), (H), (J), (K), (L), and (M). Additionally, in this action, we are approving a SIP revision submitted by the State of South Dakota on January 3, 2020 that revises the ARSD, Air Pollution Control Program.

In the table below, the key is as follows:

A—*Approve.*

D—*Disapprove.*

NA—*No Action.*

TABLE 2—INFRASTRUCTURE ELEMENTS THAT THE EPA IS PROPOSING TO ACT ON

2015 Ozone NAAQS Infrastructure SIP Elements: South Dakota	
(A): Emission Limits and Other Control Measures	A
(B): Ambient Air Quality Monitoring/Data System	A
(C): Program for Enforcement of Control Measures	A
(D)(i)(I): Prong 1 Interstate Transport—significant contribution	A
(D)(i)(I): Prong 2 Interstate Transport—interference with maintenance	A
(D)(i)(II): Prong 3 Interstate Transport—prevention of significant deterioration	A
(D)(i)(II): Prong 4 Interstate Transport—visibility	A
(D)(ii): Interstate and International Pollution Abatement	A
(E): Adequate Resources	A
(F): Stationary Source Monitoring System	A
(G): Emergency Episodes	A
(H): Future SIP revisions	A
(J): Consultation with Government Officials, Public Notification, PSD and Visibility Protection	A
(K): Air Quality and Modeling/Data	A
(L): Permitting Fees	A
(M): Consultation/Participation by Affected Local Entities	A
South Dakota ARSD; revisions to South Dakota's Air Quality Program; chapters pertaining to definitions, ambient air quality, air quality episodes, PSD, new source review, performance testing, control of visible emissions, continuous emission monitoring systems, state facilities in Rapid City area, construction permits and regional haze program administrative rules	A

IV. Incorporation by Reference

In this document, the EPA is finalizing regulatory text that includes incorporation by reference. In accordance with requirements of 1 CFR 51.5, the EPA is finalizing the incorporation by reference of a SIP revision submitted by the State of South Dakota on January 3, 2020 that revises the ARSD, Air Pollution Control Program, updating the date of incorporation by reference of federal rules in ARSD chapters pertaining to definitions, ambient air quality, air quality episodes, PSD, new source review, performance testing, control of visible emissions, continuous emission monitoring systems, State facilities in Rapid City area, construction permits and regional haze program administrative rules as is described in the preamble. The EPA has made, and will continue to make, these materials generally available through *www.regulations.gov* and at the EPA Region 8 Office (please contact the person identified in the **FOR FURTHER INFORMATION CONTACT** section of this preamble for more information). Therefore, these materials have been approved by the EPA for inclusion in the SIP, have been incorporated by reference by the EPA into that plan, are fully federally enforceable under sections 110 and 113 of the CAA as of the effective date of the final rulemaking of the EPA's approval, and will be incorporated by reference in the next update to the SIP compilation.[20]

V. Statutory and Executive Order Reviews

Under the Clean Air Act, the Administrator is required to approve a SIP submission that complies with the provisions of the Act and applicable Federal regulations. 42 U.S.C. 7410(k); 40 CFR 52.02(a). Thus, in reviewing SIP submissions, the EPA's role is to approve state choices, provided that they meet the criteria of the Clean Air Act. Accordingly, this action merely approves state law as meeting Federal requirements and does not impose additional requirements beyond those imposed by state law. For that reason, this action:

- Is not a ''significant regulatory action'' subject to review by the Office of Management and Budget under Executive Orders 12866 (58 FR 51735, October 4, 1993) and 13563 (76 FR 3821, January 21, 2011);
- Is not an Executive Order 13771 (82 FR 9339, February 2, 2017) regulatory action because SIP approvals are exempted under Executive Order 12866;
- Does not impose an information collection burden under the provisions of the Paperwork Reduction Act (44 U.S.C. 3501 *et seq.*);
- Is certified as not having a significant economic impact on a substantial number of small entities under the Regulatory Flexibility Act (5 U.S.C. 601 *et seq.*);
- Does not contain any unfunded mandate or significantly or uniquely affect small governments, described in the Unfunded Mandates Reform Act of 1995 (Pub. L. 104–4);
- Does not have Federalism implications as specified in Executive Order 13132 (64 FR 43255, August 10, 1999);
- Is not an economically significant regulatory action based on health or safety risks subject to Executive Order 13045 (62 FR 19885, April 23, 1997);
- Is not a significant regulatory action subject to Executive Order 13211 (66 FR 28355, May 22, 2001);
- Is not subject to requirements of section 12(d) of the National Technology Transfer and Advancement Act of 1995 (15 U.S.C. 272 note) because application of those requirements would be inconsistent with the CAA; and
- Does not provide EPA with the discretionary authority to address, as

[20] 62 FR 27968 (May 22, 1997).

appropriate, disproportionate human health or environmental effects, using practicable and legally permissible methods, under Executive Order 12898 (59 FR 7629, February 16, 1994).

In addition, the SIP is not approved to apply on any Indian reservation land or in any other area where EPA or an Indian tribe has demonstrated that a tribe has jurisdiction. In those areas of Indian country, the rule does not have tribal implications and will not impose substantial direct costs on tribal governments or preempt tribal law as specified by Executive Order 13175 (65 FR 67249, November 9, 2000).

The Congressional Review Act, 5 U.S.C. 801 *et seq.,* as added by the Small Business Regulatory Enforcement Fairness Act of 1996, generally provides that before a rule may take effect, the agency promulgating the rule must submit a rule report, which includes a copy of the rule, to each House of the Congress and to the Comptroller General of the United States. EPA will submit a report containing this action and other required information to the U.S. Senate, the U.S. House of Representatives, and the Comptroller General of the United States prior to publication of the rule in the **Federal Register**. A major rule cannot take effect until 60 days after it is published in the **Federal Register**. This action is not a ''major rule'' as defined by 5 U.S.C. 804(2).

Under section 307(b)(1) of the Clean Air Act, petitions for judicial review of this action must be filed in the United States Court of Appeals for the appropriate circuit by December 28, 2020. Filing a petition for reconsideration by the Administrator of this final rule does not affect the finality of this action for the purposes of judicial review nor does it extend the time within which a petition for judicial review may be filed, and shall not postpone the effectiveness of such rule or action. This action may not be challenged later in proceedings to enforce its requirements. (See section 307(b)(2)).

List of Subjects in 40 CFR Part 52

Environmental protection, Air pollution control, Carbon monoxide, Greenhouse gases, Incorporation by reference, Intergovernmental relations, Lead, Nitrogen dioxide, Ozone, Particulate matter, Reporting and recordkeeping requirements, Sulfur oxides, Volatile organic compounds.

Dated: September 23, 2020.

Debra Thomas,

Acting Regional Administrator, Region 8.

40 CFR part 52 is amended as follows:

PART 52—APPROVAL AND PROMULGATION OF IMPLEMENTATION PLANS

■ 1. The authority citation for part 52 continues to read as follows:

Authority: 42 U.S.C. 7401 *et seq.*

Subpart QQ—South Dakota

■ 2. In § 52.2170:

■ a. The table in paragraph (c) is amended by:

■ i. Revising the entries ''74:36:01:01'', ''74:36:01:05'', ''74:36:01:19'', ''74:36:01:20'', ''74:36:02:02'', ''74:36:02:03'', ''74:36:02:04'', ''74:36:02:05'', ''74:36:03:01'', ''74:36:03:02'', ''74:36:09:02'', ''74:36:09:03'', ''74:36:10:02'', ''74:36:10:03.01'', ''74:36:10:05'', ''74:36:10:07'', ''74:36:10:08'', ''74:36:11:01'', ''74:36:11:02'', ''74:36:11:03'', ''74:36:11:04'', ''74:36:12:01'', ''74:36:12:03'', ''74:36:13:02'', ''74:36:13:03'', ''74:36:13:04'', ''74:36:13:06'', ''74:36:13:07'', ''74:36:18:10'', ''74:36:20:05'', ''74:36:21:02'', ''74:36:21:04'', ''74:36:21:05'', and ''74:36:21:09'' and

■ ii. Adding an entry for ''74:36:21:13'' in numerical order; and

■ b. The table in paragraph (e) is amended by adding an entry for ''XXVI. Section 110(a)(2) Infrastructure Requirements for the 2015 8-hour Ozone NAAQS'' at the end of the table.

The revisions and additions read as follows:

§ 52.2170 Identification of plan.

* * * * *

(c) * * *

Rule No.	Rule title	State effective date	EPA effective date	Final rule citation, date	Comments
*	*	*	*	*	*
74:36:01. Definitions					
74:36:01:01	Definitions	11/25/2019	11/25/2020	[insert **Federal Register** citation], 10/26/2020.	
*	*	*	*	*	*
74:36:01:05	Applicable requirements of the Clean Air Act defined.	11/25/2019	11/25/2020	[insert **Federal Register** citation], 10/26/2020.	
*	*	*	*	*	*
74:36:01:19	Existing municipal solid waste landfill defined.	11/25/2019	11/25/2020	[insert **Federal Register** citation], 10/26/2020.	
74:36:01:20	Physical change in or change in the method of operation defined.	11/25/2019	11/25/2020	[insert **Federal Register** citation], 10/26/2020.	
*	*	*	*	*	*
74:36:02. Ambient Air Quality					
*	*	*	*	*	*
74:36:02:02	Ambient air quality standards.	11/25/2019	11/25/2020	[insert **Federal Register** citation], 10/26/2020.	
74:36:02:03	Methods of sampling and analysis.	11/25/2019	11/25/2020	[insert **Federal Register** citation], 10/26/2020.	

Rule No.	Rule title	State effective date	EPA effective date	Final rule citation, date	Comments
74:36:02:04	Ambient air monitoring network.	11/25/2019	11/25/2020	[insert **Federal Register** citation], 10/26/2020.	
74:36:02:05	Air quality monitoring requirements.	11/25/2019	11/25/2020	[insert **Federal Register** citation], 10/26/2020.	
74:36:03. Air Quality Episodes					
74:36:03:01	Air pollution emergency episode.	11/25/2019	11/25/2020	[insert **Federal Register** citation], 10/26/2020.	
74:36:03:02	Episode emergency contingency plan.	11/25/2019	11/25/2020	[insert **Federal Register** citation], 10/26/2020.	
*	* *	*	*	* *	*
74:36:09. Prevention of Significant Deterioration					
*	* *	*	*	* *	*
74:36:09:02	Prevention of Significant Deterioration.	11/25/2019	11/25/2020	[insert **Federal Register** citation], 10/26/2020.	
74:36:09:03	Public participation	11/25/2019	11/25/2020	[insert **Federal Register** citation], 10/26/2020.	
74:36:10. New Source Review					
*	* *	*	*	* *	*
74:36:10:02	Definitions	11/25/2019	11/25/2020	[insert **Federal Register** citation], 10/26/2020.	
74:36:10:03.01	New source review preconstruction permit required.	11/25/2019	11/25/2020	[insert **Federal Register** citation], 10/26/2020.	
74:36:10:05	New source review preconstruction permit required.	11/25/2019	11/25/2020	[insert **Federal Register** citation], 10/26/2020.	
*	* *	*	*	* *	*
74:36:10:07	Determining credit for emissions Offsets.	11/25/2019	11/25/2020	[insert **Federal Register** citation], 10/26/2020.	
74:36:10:08	Projected actual emissions.	11/25/2019	11/25/2020	[insert **Federal Register** citation], 10/26/2020.	
*	* *	*	*	* *	*
74:36:11. Performance Testing					
74:36:11:01	Stack performance testing or other testing methods.	11/25/2019	11/25/2020	[insert **Federal Register** citation], 10/26/2020.	
74:36:11:02	Secretary may require performance tests.	11/25/2019	11/25/2020	[insert **Federal Register** citation], 10/26/2020.	
74:36:11:03	Notice to department of performance test.	11/25/2019	11/25/2020	[insert **Federal Register** citation], 10/26/2020.	
74:36:11:04	Testing new fuels or raw materials.	11/25/2019	11/25/2020	[insert **Federal Register** citation], 10/26/2020.	
74:36:12. Control of Visible Emissions					
74:36:12:01	Restrictions on visible emissions.	11/25/2019	11/25/2020	[insert **Federal Register** citation], 10/26/2020.	
*	* *	*	*	* *	*
74:36:12:03	Exceptions granted to alfalfa pelletizers or dehydrators.	11/25/2019	11/25/2020	[insert **Federal Register** citation], 10/26/2020.	
74:36:13. Continuous Emission Monitoring Systems					
*	* *	*	*	* *	*
74:36:13:02	Minimum performance specifications for all continuous emission monitoring systems.	11/25/2019	11/25/2020	[insert **Federal Register** citation], 10/26/2020.	

Rule No.	Rule title	State effective date	EPA effective date	Final rule citation, date	Comments
74:36:13:03	Reporting requirements	11/25/2019	11/25/2020	[insert **Federal Register** citation], 10/26/2020.	
74:36:13:04	Notice to department of exceedance.	11/25/2019	11/25/2020	[insert **Federal Register** citation], 10/26/2020.	
*	*	*	*	*	*
74:36:13:06	Compliance certification	11/25/2019	11/25/2020	[insert **Federal Register** citation], 10/26/2020.	
74:36:13:07	Credible evidence	11/25/2019	11/25/2020	[insert **Federal Register** citation], 10/26/2020.	
*	*	*	*	*	*
74:36:18. Regulations for State Facilities in the Rapid City Area					
*	*	*	*	*	*
74:36:18:10	Visible emission limit for construction and continuous operation activities.	11/25/2019	11/25/2020	[insert **Federal Register** citation], 10/26/2020.	
*	*	*	*	*	*
74:36:20. Construction Permits for New Sources or Modifications					
*	*	*	*	*	*
74:36:20:05	Standard for issuance of construction permit.	11/25/2019	11/25/2020	[insert **Federal Register** citation], 10/26/2020.	
*	*	*	*	*	*
74:36:21. Regional Haze Program					
*	*	*	*	*	*
74:36:21:02	Definitions	11/25/2019	11/25/2020	[insert **Federal Register** citation], 10/26/2020.	
*	*	*	*	*	*
74:36:21:04	Visibility impact analysis	11/25/2019	11/25/2020	[insert **Federal Register** citation], 10/26/2020.	
74:36:21:05	BART determination	11/25/2019	11/25/2020	[insert **Federal Register** citation], 10/26/2020.	
*	*	*	*	*	*
74:36:21:09	Monitoring, recordkeeping, and reporting.	11/25/2019	11/25/2020	[insert **Federal Register** citation], 10/26/2020.	
*	*	*	*	*	*
74:36:21:13	Calculate a 30-day rolling average.	11/25/2019	11/25/2020	[insert **Federal Register** citation], 10/26/2020.	
*	*	*	*	*	*

* * * * * (e) * * *

Rule title	State effective date	EPA effective date	Final rule citation, date	Comments
*	*	*	*	*
XXVI. Section 110(a)(2) Infrastructure Requirements for the 2015 8-hour Ozone NAAQS.	01/15/2020	11/25/2020	[insert **Federal Register** citation], 10/26/2020.	

[FR Doc. 2020–21474 Filed 10–23–20; 8:45 am]

BILLING CODE 6560–50–P

ENVIRONMENTAL PROTECTION AGENCY

40 CFR Parts 52 and 81

[EPA–R03–OAR–2020–0171; FRL–10015–34–Region 3]

Air Plan Approval; West Virginia; Redesignation of the Marshall Sulfur Dioxide Nonattainment Area to Attainment and Approval of the Area's Maintenance Plan

AGENCY: Environmental Protection Agency (EPA).

ACTION: Final rule.

SUMMARY: The Environmental Protection Agency (EPA) is approving a redesignation request and state implementation plan (SIP) revisions submitted by the State of West Virginia related to the 2010 primary national ambient air quality standard (NAAQS or Standard) for sulfur dioxide (SO_2) (2010 SO_2 NAAQS). Emissions of SO_2 in the Marshall, West Virginia Area have been permanently reduced, a maintenance plan has been adopted that includes limits that assure continued attainment and monitored ambient SO_2 readings in the nonattainment area are currently well below the 2010 SO_2 NAAQS. The effect of this action changes the designation of the Marshall Area from nonattainment to attainment of the 2010 SO_2 NAAQS. This action is being taken under the Clean Air Act (CAA).

DATES: This final rule is effective on November 25, 2020.

ADDRESSES: EPA has established a docket for this action under Docket ID Number EPA–R03–OAR–2020–0171. All documents in the docket are listed on the *https://www.regulations.gov* website. Although listed in the index, some information is not publicly available, *e.g.,* confidential business information (CBI) or other information whose disclosure is restricted by statute. Certain other material, such as copyrighted material, is not placed on the internet and will be publicly available only in hard copy form. Publicly available docket materials are available through *https://www.regulations.gov,* or please contact the person identified in the **FOR FURTHER INFORMATION CONTACT** section for additional availability information.

FOR FURTHER INFORMATION CONTACT: Megan Goold, Planning & Implementation Branch (3AD30), Air & Radiation Division, U.S. Environmental Protection Agency, Region III, 1650 Arch Street, Philadelphia, Pennsylvania 19103. The telephone number is (215) 814–2027. Ms. Megan Goold can also be reached via electronic mail at *goold.megan@epa.gov.*

SUPPLEMENTARY INFORMATION:

I. Background

The Marshall Area is comprised of the Clay, Franklin, and Washington Tax Districts of Marshall County, West Virginia. On March 18, 2020, West Virginia, through the West Virginia Department of Environmental Protection (WVDEP), submitted a redesignation request for the Marshall, West Virginia SO_2 Nonattainment Area (Marshall Area or Area). In conjunction with its request, WVDEP submitted SIP revisions comprised of a maintenance plan for the Area, SO_2 emissions limits for the Mitchell Power Plant (Mitchell), and a modeling analysis demonstrating that the Mitchell limits provide for attainment in the Area.

The Marshall Area was designated nonattainment for the 2010 SO_2 NAAQS in the first round of designations for the NAAQS published on August 5, 2013, which became effective on October 4, 2013. Under CAA section 191(a), attainment plan SIPs were due for areas designated nonattainment in round one 18 months after the effective date of designation, or April 4, 2015. Such SIPs were required by CAA section 192(a) to provide for attainment of the NAAQS as expeditiously as practicable, but no later than five years from the effective date of nonattainment designation, or October 4, 2018. West Virginia submitted an attainment SIP on March 17, 2017 (2017 SIP).[1] The SIP addressed the required elements of an attainment SIP under CAA section 172(c), including an attainment demonstration that the State asserted showed attainment of the 2010 SO_2 NAAQS, SO_2 emissions limits for the Mitchell Power Plant, reasonably available control measures including reasonably available control technology (RACM/RACT), reasonable further progress (RFP), contingency measures, and certification that nonattainment new source review (NNSR) permit program requirements were being met. The 2017 SIP included a West Virginia Compliance Order on Consent (2016 consent order) that required Kentucky Power Company, the operator of American Electric Power's (AEP) Mitchell Power Plant, to comply with an SO_2 maximum emissions limit from Units 1 and 2, of 6,175 pounds per hour (lbs/hr) on a 30-day rolling average, along with associated monitoring, recordkeeping, and reporting requirements, starting on January 1, 2017. The March 18, 2020 submittal requesting redesignation included a demonstration showing the area is in attainment, a maintenance plan, contingency measures, and a December 2, 2019 consent order (2019 consent order) with Kentucky Power for Mitchell with lower SO_2 emissions limits based on modeling with a changed stack height. Specifically, the 2019 consent order establishes an SO_2 emissions limit for Mitchell Units 1 and 2 as a maximum of 3,149 lbs/hr on a 30-day rolling average, with compliance parameters including continuous emissions monitoring, recordkeeping including a calculation of the daily 30-day average, reporting of deviations from the requirements and semi-annual compliance reporting. Compliance with the limits and other provisions in the 2019 consent order were required starting on January 1, 2020.

Under CAA section 110(k)(2) through (4), EPA was required to take action to approve or disapprove West Virginia's 2017 SIP within 12 months of determining it to be complete, but EPA did not take timely action. Subsequently, the Center for Biological Diversity and other plaintiffs (CBD) sued EPA in the U.S. District Court for the Northern District of California seeking a court order to compel EPA's action on West Virginia's 2017 SIP and several other SIPs for other areas in the nation. *Center for Biological Diversity, et al.,* v. *Wheeler,* No. 4:18–cv–03544–YGR. That lawsuit resulted in the plaintiffs and EPA agreeing to a schedule, entered by the court as an order, for EPA to take action on the covered SIPs by certain deadlines. The court ordered deadline for EPA to take action on West Virginia's 2017 SIP is October 30, 2020. The order also provided that if EPA issues a redesignation to attainment for any area for which the order required EPA action on a submitted SIP covered by the order, then EPA's obligation to take action on that SIP's CAA section 172(c) elements would be automatically terminated. As noted in the proposal, this action to redesignate the Marshall, West Virginia nonattainment area to attainment and approve the submitted maintenance plan with a lower emissions limit than that contained in the 2017 SIP submission will moot EPA's requirement under the consent order to take action on the 2017 SIP.

[1] On March 18, 2016, EPA made a finding of failure to submit nonattainment area SIPs for 19 nonattainment areas, including the Marshall Area. EPA's letter to West Virginia dated September 27, 2017 confirmed that West Virginia's March 17, 2017 submittal corrected the deficiency identified in the finding.

II. Summary of SIP Revision and EPA Analysis

West Virginia's March 18, 2020 redesignation request included a maintenance plan providing for continued attainment of the SO_2 NAAQS for a period of ten years following redesignation of the Area, SO_2 emissions limits for Mitchell, and a modeling analysis demonstrating that the Mitchell limits provide for attainment in the Area. West Virginia also requested that EPA incorporate the 2019 consent order into the SIP.

Under CAA section 107(d)(3)(E), there are five criteria which must be met before a nonattainment area may be redesignated to attainment:

1. EPA has determined that the relevant NAAQS has been attained in the area;
2. The applicable implementation plan has been fully approved by EPA under section 110(k);
3. EPA has determined that improvement in air quality is due to permanent and enforceable reductions in emissions resulting from the SIP, Federal regulations, and other permanent and enforceable reductions;
4. EPA has fully approved a maintenance plan, including a contingency plan, for the area under section 175A of the CAA; and,
5. The state has met all applicable requirements for the area under section 110 and part D. The June 30, 2020 proposal (85 FR 39505) provides a detailed discussion of each requirement and EPA's analysis of how each requirement was met and is not repeated here. To summarize the analysis in the notice of proposed rulemaking (NPRM), EPA determined that the modeling submitted as part of the maintenance plan for the redesignation request submitted on March 18, 2020 shows that the Marshall Area is attaining the 2010 SO_2 NAAQS, that the air quality improvement in the Area is attributable to permanent and enforceable emission reductions at Mitchell, that the maintenance plan assures that the area will continue to attain the 2010 SO_2 NAAQS, and that West Virginia has met all applicable requirements under section 110 (general SIP requirements) and part D of title I of the CAA (SIP requirements for nonattainment areas) for purposes of this redesignation. On this basis, EPA finds that West Virginia has adequately addressed the five basic components necessary to redesignate the Marshall Area to attainment.

EPA received one adverse comment on the proposal. To review the full comment received, refer to the Docket for this rule, as identified in the **ADDRESSES** section of this document. A summary of the comment received, and EPA's response are provided below.

III. Public Comment and EPA Response

Comment: The commenter asserts that EPA needs to do more to guarantee that the Mitchell plant will not violate the NAAQS. Specifically, the commenter expresses concern that the result of the modeling for Mitchell Plant of 196.2 micrograms per cubic meter (μg/m³) is too close to 196.4 μg/m³ (corresponding to the level of the NAAQS, which is 75 parts per billion (ppb)), and therefore does not provide an adequate margin of safety to protect public health. Also, that EPA improperly ''rounded up'' to obtain the value of 196.4 μg/m³, and that 196.4 μg/m³ is not equivalent to the NAAQS, which is expressed as 75 ppb. In addition, the commenter believes that if the AERMOD model was run with a finer grid, the results would show NAAQS violations, and questions the margin of error of the AERMOD model. Finally, the commenter asks how EPA expects the modeled areas to maintain the NAAQS and suggests that a monitor is needed near the Mitchell plant.

Response: EPA disagrees with the commenter's assertion that more is needed to guarantee that the Mitchell plant will not cause a violation of the NAAQS. First, the 2010 SO_2 NAAQS was set at a level which already provides for an adequate margin of safety, as required by CAA Section 109(b)(1). Section 109(b)(1) defines a primary standard as one where ''the attainment and maintenance of which, in the judgment of the Administrator, based on [the air quality] criteria and allowing an adequate margin of safety, are requisite to protect the public health.'' CAA section 109(b)(1). As noted when EPA set the SO_2 standard, ''[t]hus, in selecting primary standards that include an adequate margin of safety, the Administrator is seeking not only to prevent pollution levels that have been demonstrated to be harmful but also to prevent lower pollutant levels that may pose an unacceptable risk of harm, even if the risk is not precisely identified as to nature or degree.'' 75 FR 35520, 35521 (June 22, 2010). Because the NAAQS already includes a margin of safety, the fact that the 99th percentile of maximum daily one-hour modeled concentrations averaged over five years is below the NAAQS of 196.4 μg/m³ ensures that public health is protected.

EPA also disagrees that EPA improperly ''rounded up'' to develop the 196.4 μg/m³ value that is equivalent to the 75 ppb NAAQS standard. The commenter does not identify the number that was supposedly rounded up, so EPA cannot directly address that claim. EPA recognized the need to identify and apply a consistent value expressed in μg/m³ that EPA considers equivalent to 75 ppb, so in the Round 3 intended designations (82 FR 41903), published September 5, 2017, EPA determined a value of 196.4 μg/m³ (based on calculations using all available significant figures) to be equivalent to 75 ppb. To avoid confusion, EPA is expecting attainment and redesignation demonstrations to show achievement with concentrations at or below precisely 196.4 μg/m³.[2] EPA concludes that the Marshall modeling results of 196.2 μg/m³ demonstrate that the area meets the standard. Because monitoring data was also available for this area, EPA analyzed that data, which showed a design value for the most recent three-year period (2017 through 2019) of 8 ppb. This monitored data, which is from the same previously violating monitor that caused this area to be designated nonattainment in 2013 based on 2009–2011 data, provides further evidence that SO_2 emissions concentrations have greatly improved in this area and supports EPA's redesignation of the area to attainment.

Regarding the commenter's question about the margin of error for AERMOD, EPA notes that AERMOD is a refined, steady-state (both emissions and meteorology over a 1-hour time step), multiple source, air-dispersion model that was originally promulgated by the EPA as part of its December 2005 revision to the Guideline on Air Quality Models, and is the preferred model to use for industrial sources in this type of air quality analysis. Furthermore, AERMOD predicts concentrations in many areas within the nonattainment area, rather than just at the monitor location, and therefore provides a more robust set of concentration data to assess attainment within the area than would be provided by a few SO_2 monitors. EPA believes that the use of AERMOD in this Redesignation Request and Maintenance Plan was an appropriate choice regardless of any potential ''margin of error'' in the model.

EPA also disagrees with the commenter's assertion that a finer modeling grid resolution should have been used. EPA's Guidance for the 1-

[2] While some Round 3 designation TSDs explained that this value was ''equivalent . . . using a 2.619 ug/m³ conversion factor'' (more precisely, using a conversion factor of approximately 2.6187), in fact EPA here was determining the concentration value in ug/m³ that is to be considered equivalent to 75 ppb, rather than the precise value of the conversion factor.

hour SO_2 Nonattainment SIP Submissions states, ''Receptor placement should be of sufficient density to provide resolution needed to detect significant gradients in the concentrations with receptors placed closer together near the source to detect local gradients and placed farther apart away from the source'' (page A–9).[3] The area of maximum concentration in this modeling analysis had a 100 meter spaced receptor grid, which is the finest scale in the modeling domain. One of the reasons which would call for a finer grid is if there were large elevation differences between the facility and the area of maximum concentration, and that is not the case here. The facility is 0.67 kilometers (km) from the modeled maximum concentration and the elevation differences are minimal.

Regarding the commenter's question regarding how the Mitchell plant will maintain the standard, as stipulated by CAA 175A, the state must submit a maintenance plan which demonstrates how the source within the Marshall Area will provide for maintenance of the standard for the next ten years. Eight years after the redesignation, the state must submit a revised maintenance plan demonstrating that attainment will continue to be maintained for the ten years following the initial ten-year period. To address the possibility of future NAAQS violations, the maintenance plan must also contain contingency measures to assure prompt correction of any future violations. Specifically, the maintenance plan should address five requirements: (1) An attainment emissions inventory; (2) a maintenance demonstration; (3) a commitment for continued air quality monitoring; (4) the verification of continued attainment; and (5) a contingency plan.[4] As detailed in the NPRM for this action, WV submitted a maintenance plan adequately addressing these five components necessary to maintain the SO_2 NAAQS in the Marshall Area.

IV. Final Action

EPA is making a finding that the Marshall Area has attained the 2010 SO_2 NAAQS, as demonstrated by a modeling analysis reflecting a new SO_2 emission limit for the Mitchell Power Plant and reflecting evidence (described in the notice of proposed rulemaking) that the Mitchell Power Plant is meeting this limit. EPA is also determining that West Virginia has met the planning requirements necessary for EPA to redesignate the Marshall Area from nonattainment to attainment of the 2010 SO_2 NAAQS, including the requirements for permanent and enforceable measures, submission of an approvable maintenance plan that will assure attainment for ten years after redesignation, and that all other applicable CAA requirements under section 110 and part D, as discussed in the NPRM for this rule, have been met. Therefore, EPA is approving the Marshall Area redesignation request, maintenance plan, SO_2 emission limits and associated compliance parameters for Mitchell in a 2019 consent order, and the modeling demonstration showing that the limits provide for maintenance. EPA is taking these actions under the CAA.

IV. Incorporation by Reference

In this document, EPA is finalizing regulatory text that includes incorporation by reference. In accordance with requirements of 1 CFR 51.5, EPA is finalizing the incorporation by reference of West Virginia's 2010 SO_2 Maintenance Plan for the Marshall Area and the Mitchell Power Plant Consent Order CO–SIP–C–2019–13 described in the amendments to 40 CFR part 52 set forth below. EPA has made, and will continue to make, these materials generally available through *https://www.regulations.gov* and at the EPA Region III Office (please contact the person identified in the **FOR FURTHER INFORMATION CONTACT** section of this preamble for more information). Therefore, these materials have been approved by EPA for inclusion in the SIP, have been incorporated by reference by EPA into that plan, are fully Federally enforceable under sections 110 and 113 of the CAA as of the effective date of the final rule of EPA's approval, and will be incorporated by reference in the next update to the SIP compilation.[5]

V. Statutory and Executive Order Reviews

A. General Requirements

Under the CAA, redesignation of an area to attainment and the accompanying approval of the maintenance plan under CAA section 107(d)(3)(E) are actions that affect the status of a geographical area and do not impose any additional regulatory requirements on sources beyond those required by state law. A redesignation to attainment does not in and of itself impose any new requirements, but rather results in the application of requirements contained in the CAA for areas that have been redesignated to attainment. Moreover, the Administrator is required to approve a SIP submission that complies with the provisions of the Act and applicable Federal regulations. 42 U.S.C. 7410(k); 40 CFR 52.02(a). Thus, in reviewing SIP submissions, EPA's role is to approve state choices, provided they meet the criteria of the CAA. Accordingly, this action merely approves state law as meeting federal requirements and does not impose additional requirements beyond those imposed by state law. For these reasons, this action:

- Is not a ''significant regulatory action'' subject to review by the Office of Management and Budget under Executive Orders 12866 (58 FR 51735, October 4, 1993) and 13563 (76 FR 3821, January 21, 2011);
- Is not an Executive Order 13771 (82 FR 9339, February 2, 2017) regulatory action because it is not a significant regulatory action under Executive Order 12866.
- Does not impose an information collection burden under the provisions of the Paperwork Reduction Act (44 U.S.C. 3501 *et seq.*);
- Is certified as not having a significant economic impact on a substantial number of small entities under the Regulatory Flexibility Act (5 U.S.C. 601 *et seq.*);
- Does not contain any unfunded mandate or significantly or uniquely affect small governments, as described in the Unfunded Mandates Reform Act of 1995 (Pub. L. 104–4);
- Does not have Federalism implications as specified in Executive Order 13132 (64 FR 43255, August 10, 1999);
- Is not an economically significant regulatory action based on health or safety risks subject to Executive Order 13045 (62 FR 19885, April 23, 1997);
- Is not a significant regulatory action subject to Executive Order 13211 (66 FR 28355, May 22, 2001);
- Is not subject to requirements of section 12(d) of the National Technology Transfer and Advancement Act of 1995 (15 U.S.C. 272 note) because application of those requirements would be inconsistent with the CAA; and
- Does not provide EPA with the discretionary authority to address, as appropriate, disproportionate human health or environmental effects, using practicable and legally permissible methods, under Executive Order 12898 (59 FR 7629, February 16, 1994).

[3] *https://www.epa.gov/sites/production/files/2016-06/documents/20140423guidance_nonattainment_sip.pdf.*

[4] See Memorandum from John Calcagni, Director, Air Quality Management Division, EPA, ''Procedures for Processing Requests to Redesignate Areas to Attainment,'' September 4, 1992.

[5] 62 FR 27968 (May 22, 1997).

The SIP is not approved to apply on any Indian reservation land as defined in 18 U.S.C. 1151 or in any other area where EPA or an Indian tribe has demonstrated that a tribe has jurisdiction. In those areas of Indian country, the rule does not have tribal implications and will not impose substantial direct costs on tribal governments or preempt tribal law as specified by Executive Order 13175 (65 FR 67249, November 9, 2000).

B. Submission to Congress and the Comptroller General

The Congressional Review Act, 5 U.S.C. 801 *et seq.,* as added by the Small Business Regulatory Enforcement Fairness Act of 1996, generally provides that before a rule may take effect, the agency promulgating the rule must submit a rule report, which includes a copy of the rule, to each House of the Congress and to the Comptroller General of the United States. EPA will submit a report containing this action and other required information to the U.S. Senate, the U.S. House of Representatives, and the Comptroller General of the United States prior to publication of the rule in the **Federal Register**. A major rule cannot take effect until 60 days after it is published in the **Federal Register**. This action is not a ''major rule'' as defined by 5 U.S.C. 804(2).

C. Petitions for Judicial Review

Under section 307(b)(1) of the CAA, petitions for judicial review of this action must be filed in the United States Court of Appeals for the appropriate circuit by December 28, 2020. Filing a petition for reconsideration by the Administrator of this final rule does not affect the finality of this action for the purposes of judicial review nor does it extend the time within which a petition for judicial review may be filed, and shall not postpone the effectiveness of such rule or action. This action approving the redesignation of the West Virginia Marshall Nonattainment Area and associated maintenance plan may not be challenged later in proceedings to enforce its requirements. (See CAA section 307(b)(2).)

List of Subjects

40 CFR Part 52

Environmental protection, Air pollution control, Carbon monoxide, Incorporation by reference, Intergovernmental relations, Nitrogen dioxide, Ozone, Particulate matter, Reporting andrecordkeeping requirements, Sulfur oxides, Volatile organic compounds.

40 CFR Part 81

Environmental protection, Air pollution control, Carbon monoxide, Incorporation by reference, Intergovernmental relations, Nitrogen dioxide, Ozone, Particulate matter, Reporting andrecordkeeping requirements, Sulfur oxides, Volatile organic compounds.

Dated: September 28, 2020.

Cosmo Servidio,

Regional Administrator, Region III.

For the reasons stated in the preamble, the EPA amends 40 CFR parts 52 and 81 as follows:

PART 52—APPROVAL AND PROMULGATION OF IMPLEMENTATION PLANS

■ 1. The authority citation for part 52 continues to read as follows:

Authority: 42 U.S.C. 7401 *et seq.*

Subpart XX—West Virginia

■ 2. Section 52.2520 is amended:

■ a. In the table in paragraph (d), by adding the entry ''Mitchell Power Plant'' at the end of the table; and

■ b. In the table in paragraph (e) by adding an entry for ''2010 Sulfur Dioxide Maintenance Plan—Marshall Area'' at the end of the table.

The additions read as follows:

§ 52.2520 Identification of plan.

* * * * *

(d) * * *

EPA—APPROVED SOURCE SPECIFIC REQUIREMENTS

Source name	Permit/order or registration number	State effective date	EPA approval date	Additional explanation/citation at 40 52.2565
* *	*	*	*	* *
Mitchell Power Plant	Consent Order CO–SIP–C–2019–13.	01/01/2020	10/26/2020, [insert **Federal Register** citation].	Established SO_2 emission limit.

(e) * * *

Name of non-regulatory SIP revision	Applicable geographic area	State submittal date	EPA approval date	Additional explanation
* *	*	*	*	* *
2010 Sulfur Dioxide Maintenance Plan.	Marshall Area (Clay, Franklin, and Washington Tax Districts of Marshall County).	03/18/20	10/26/2020, [insert **Federal Register** citation].	Docket No. EPA–R03–OAR–2020–0171.

■ 3. Section 52.2525 is amended by adding paragraph (e) to read as follows:

§ 52.2525 Control strategy: Sulfur dioxide.

* * * * *

(e) EPA approves the maintenance plan for Clay, Franklin, and Washington Tax Districts, West Virginia, submitted by the Department of Environmental Protection on March 18, 2020.

PART 81—DESIGNATION OF AREAS FOR AIR QUALITY PLANNING PURPOSES

■ 4. The authority citation for part 81 continues to read as follows:

Authority: 42 U.S.C. 7401 *et seq.*

Subpart C—Section 107 Attainment Status Designations

■ 5. In § 81.349 amend the table ''West Virginia—2010 Sulfur Dioxide NAAQS [Primary]'' by revising the entry for ''Marshall, WV'' to read as follows:

§ 81.349 West Virginia.

* * * * *

WEST VIRGINIA—2010 SULFUR DIOXIDE NAAQS

[Primary]

Designated area[1] [3]	Designation	
	Date [2]	Type
Marshall, WV:		
Marshall County (part)	11/25/2020	Attainment.
Area consisting of Clay Tax District, Franklin Tax District, and Washington Tax District.		
* * * * * * *		

[1] Includes any Indian country in each county or area, unless otherwise specified. EPA is not determining the boundaries of any area of Indian country in this table, including any area of Indian country located in the larger designation area. The inclusion of any Indian country in the designation area is not a determination that the state has regulatory authority under the Clean Air Act for such Indian country.

[2] This date is April 9, 2018, unless otherwise noted.

[3] Mineral County will be designated by December 31, 2020.

* * * * *

[FR Doc. 2020–21757 Filed 10–23–20; 8:45 am]

BILLING CODE 6560–50–P

ENVIRONMENTAL PROTECTION AGENCY

40 CFR Part 63

[EPA–HQ–OAR–2010–0682; FRL–10014–47–OAR]

National Emission Standards for Hazardous Air Pollutants: Petroleum Refinery Sector: Action Denying a Petition for Reconsideration

AGENCY: Environmental Protection Agency (EPA).

ACTION: Denial of petition for reconsideration.

SUMMARY: The U.S. Environmental Protection Agency (EPA) is providing notice that it has responded to a petition for reconsideration of a final rule published in the **Federal Register** on February 4, 2020. The rule promulgated amendments to the National Emission Standards for Hazardous Air Pollutants (NESHAP): Petroleum Refinery Sector based on the residual risk and technology review (RTR) conducted for the Petroleum Refinery source category. On April 6, 2020, the EPA received a petition for reconsideration on five issues related to the February 4, 2020, final rule. On September 3, 2020, the Administrator notified the petitioner by letter that the EPA was denying reconsideration. The basis for the denial is set out fully in the letter sent to the petitioner, and this letter is available in the rulemaking docket.

DATES: This rule is effective on October 26, 2020.

FOR FURTHER INFORMATION CONTACT: For questions about this action, contact Mr. Andrew Bouchard, Sector Policies and Programs Division (E143–01), Office of Air Quality Planning and Standards, U.S. Environmental Protection Agency, Research Triangle Park, North Carolina 27711; telephone number: (919) 541–4036; and email address: *bouchard.andrew@epa.gov.*

SUPPLEMENTARY INFORMATION:

I. How can I get copies of this document and other related information?

This **Federal Register** document, the petition for reconsideration, and the letter denying the petition for reconsideration are available in the docket the EPA established for the Petroleum Refining sector under Docket ID No. EPA–HQ–OAR–2010–0682. The petition for reconsideration is titled, *April 6, 2020 Petition for Reconsideration from EarthJustice,* which is available in Docket ID No. EPA–HQ–OAR–2010–0682. The document for the EPA's response letter denying the petition for reconsideration is titled, *EPA's Response to the April 6, 2020 Petition for Reconsideration from EarthJustice,* which is also available in Docket ID No. EPA–HQ–OAR–2010–0682. All documents in the docket are listed on the *http://www.regulations.gov/* website. Although listed in the index, some information is not publicly available (*i.e.,* confidential business information or other information whose disclosure is restricted by statute). Certain other material, such as copyrighted material, is not placed on the internet and will be publicly available only in hard copy form. Publicly available docket materials are available either electronically through *http://www.regulations.gov/* or in hard copy at the EPA Docket Center, Room 3334, WJC West Building, 1301 Constitution Ave. NW, Washington, DC. The Public Reading Room is open from 8:30 a.m. to 4:30 p.m., Monday through Friday, excluding legal holidays. The telephone number for the Public Reading Room is (202) 566–1744 and the telephone number for the EPA Docket Center is (202) 566–1742. Out of an abundance of caution for members of the public and our staff, the EPA Docket Center and Reading Room are closed to the public, with limited exceptions, to reduce the risk of transmitting COVID–19. Our Docket Center staff will continue to provide remote customer service via email, phone, and webform. For further information on EPA Docket Center services and the current status, please visit us online at *https://www.epa.gov/dockets.* The amended Petroleum Refinery Sector NESHAP was published in the **Federal Register** on February 4, 2020, at 85 FR 6064.

II. Judicial Review

Section 307(b)(1) of the Clean Air Act (CAA) specifies which Federal Courts of Appeal have venue over petitions for review of final EPA actions. This section provides, in part, that ''a petition for review of action of the Administrator in promulgating . . . any emission standard or requirement under section [112] of [the CAA],'' or any other ''nationally applicable'' final action, ''may be filed only in the United States Court of Appeals for the District of Columbia.''

The EPA has determined that its denial of the petition for reconsideration is nationally applicable for purposes of CAA section 307(b)(1) because the actions directly affect the Petroleum Refinery Sector NESHAP, which are nationally applicable CAA section 112 standards. Thus, any petitions for review of the EPA's decision denying the petitioner's request for reconsideration must be filed in the

United States Court of Appeals for the District of Columbia Circuit by December 28, 2020.

III. Description of Action

On February 4, 2020, the EPA promulgated a final rule addressing a petition for reconsideration that was filed in response to a rule issued in December 2015,[1] which amended the Petroleum Refinery Sector NESHAP based on the RTR conducted for the Petroleum Refinery source category. 85 FR 6064. Following promulgation of the final rule, on April 6, 2020, the Administrator received a petition for reconsideration of certain provisions of the final rule pursuant to CAA section 307(d)(7)(B). The petition for reconsideration was filed by Earthjustice on behalf of Air Alliance Houston, California Communities Against Toxics, Clean Air Council, Coalition for a Safe Environment, Community In-Power and Development Association, Del Amo Action Committee, Environmental Integrity Project, Louisiana Bucket Brigade, Sierra Club, Texas Environmental Justice Advocacy Services, and Utah Physicians for a Healthy Environment. The petition for reconsideration requests that the EPA reconsider five issues in the February 4, 2020, final rule: (1) The EPA's rationale that the pressure relief device (PRD) standards and emergency flaring standards are continuous; (2) the EPA's rationale for the PRD standards under CAA sections 112(d)(2) and (3); (3) the EPA's rationale for separate work practice standards for flares operating above the smokeless capacity; (4) the EPA's rationale for risk acceptability and risk determination; and (5) the EPA's analysis and rationale in its assessment of acute risk.

CAA section 307(d)(7)(B) requires the EPA to convene a proceeding for reconsideration of a rule if a party raising an objection to the rule ''can demonstrate to the Administrator that it was impracticable to raise such objection within [the public comment period] or if the grounds for such objection arose after the period for public comment (but within the time specified for judicial review) and if such objection is of central relevance to the outcome of the rule.'' The requirement to convene a proceeding to reconsider a rule is, thus, based on the petitioner demonstrating to the EPA both: (1) That it was impracticable to raise the objection during the comment period, or that the grounds for such objection arose after the comment period, but within the time specified for judicial review (*i.e.,* within 60 days after publication of the final rulemaking notice in the **Federal Register**, see CAA section 307(b)(1)); and (2) that the objection is of central relevance to the outcome of the rule.

The EPA carefully reviewed the petition for reconsideration and evaluated all five issues raised to determine if they meet the CAA section 307(d)(7)(B) criteria for reconsideration. In a separate letter to the petitioner, the EPA Administrator denied the petition for reconsideration. The letter articulates in detail the rationale for the EPA's final responses and is available in the docket for this action.

Andrew Wheeler,

Administrator.

[FR Doc. 2020–23491 Filed 10–23–20; 8:45 am]

BILLING CODE 6560–50–P

[1] The December 1, 2015, rule can be found in the **Federal Register** at 80 FR 75178.

DEPARTMENT OF THE INTERIOR

43 CFR Part 51

[Docket No. DOI–2020–0001; 201D0102DM, DS6CS00000, DLSN00000.000000, DX6CS25]

RIN 1093–AA27

Procedures for Issuing Guidance Documents

AGENCY: Office of the Secretary, Interior.

ACTION: Interim final rule; request for comments.

SUMMARY: We, the Department of the Interior (Department), through this interim final rule (IFR), revise our rulemaking procedures to implement an Executive order (E.O.) entitled ''Promoting the Rule of Law Through Improved Agency Guidance Documents.'' The E.O. requires Federal Agencies to finalize regulations or amend existing regulations to establish processes and procedures for issuing guidance documents and to establish exceptions for categories of guidance documents.

DATES: This rule is effective October 26, 2020. Comments will be accepted until December 28, 2020.

ADDRESSES: You may submit comments by one of the following methods:

Federal e-Rulemaking Portal: http://www.regulations.gov. Follow the instructions for submitting comments to Docket No. DOI–2020–0001. Please note that if you are using the Federal eRulemaking Portal, the deadline for submitting electronic comments is 11:59 Eastern Standard Time on the comment due date.

• *Mail:* Address comment to Public Comments Processing, Attn: Docket No. DOI–2020–0001; Department of the Interior; MS: 7328; 1849 C Street NW, Washington, DC 20240.

FOR FURTHER INFORMATION CONTACT: Bivan Patnaik, Deputy Director of Regulatory Affairs, Office of the Executive Secretariat and Regulatory Affairs, by phone at 202–208–3181 or via the Federal Relay Service at 800–877–8339, or via email account *guidance_document@ios.doi.gov.*

SUPPLEMENTARY INFORMATION:

Background Information

E.O. 13891, entitled ''Promoting the Rule of Law Through Improved Agency Guidance Documents,'' which published in the **Federal Register** on October 15, 2019 (84 FR 55235), is intended to improve the guidance document development process while maintaining an open and fair regulatory process for the public. On October 31, 2019, the Office of Management and Budget (OMB) issued a ''Memorandum for Regulatory Policy Officers at Executive Departments and Agencies and Managing and Executive Directors of Certain Agencies and Commissions'' (M–20–02).[1] One of E.O. 13891's requirements is that Federal Agencies promulgate final regulations or amend existing regulations that set forth processes and procedures for issuing guidance documents.[2] The purpose of this IFR is to codify these processes and procedures for issuing guidance documents as well as to allow the public to comment on the rule. The Department is amending its regulations under an IFR and will forgo issuing a proposed rule. The IFR will take effect on the date specified above in **DATES**, with public comment to conclude as set forth in **DATES**. Based on public comments received, the interim rule may be revised. The final rule will contain responses to comments received on the IFR, state the final decision, and provide the justification for that decision.

Discussion of the Interim Final Rule

This IFR creates a new part 51 in title 43 of the Code of Federal Regulations (CFR), which concerns Public Lands and the Department of the Interior. This rule promulgates the Department's procedural requirements governing the development, review, and clearance of guidance documents; the processes for

[1] See Memorandum for Regulatory Policy Officers at Executive Departments and Agencies and Managing and Executive Directors of Certain Agencies and Commissions.

[2] See section 4(a) of Executive Order 13891.

the public to petition for withdrawal or modification of a particular guidance document, including designating the officials to whom petitions should be directed; and the procedures for review and approval of significant guidance documents.

The procedures contained in this IFR apply to all guidance documents, which E.O. 13891 defines as any statement of agency that is of general applicability and intended to have future effect on the behavior of regulated parties, that sets forth a policy on a statutory, regulatory, or technical issues or an interpretation of a statute or regulation, with certain exceptions. OMB's M–20–02 further clarifies and provides information for Agencies to consider in determining when a document is indeed a guidance document, including a functional test for rules of agency organization, procedure, or practice. This IFR codifies the Department's existing procedures and implements new procedures regarding the development, review, and clearance of guidance documents. These procedures ensure that all guidance documents receive legal review and, when appropriate, Office of the Secretary review. Before guidance documents are issued, they must be reviewed to ensure they are written in plain language and do not impose any substantive legal requirements above and beyond those imposed by statute, regulation, or contract. If a guidance document purports to describe, approve, or recommend specific conduct that extends beyond what is required by existing law, regulation, or contract, then it must include clear and prominent language effectively stating that the contents of the guidance document do not have the force and effect of law and are not meant to bind the public in any way, and the guidance document is intended only to provide clarity to the public regarding existing requirements under the law, regulation, contract or agency policies.

In recognition of the fact that although guidance documents are not legally binding, they could nevertheless have a substantial economic impact on regulated entities that alter their conduct to conform to the guidance, this IFR directs Bureaus and Offices within the Department to undertake a benefits and cost assessment of the impact of the guidance document when appropriate. Further information that describes identifying and measuring benefits and costs are found in OMB's Circular A–4 (add footnote). Further Bureaus/Offices of the Department are to be in compliance with E.O. 13891, Section 4(a)(iii)(C) and (D). The procedures for the development, review, and clearance of guidance documents can be found at 43 CFR part 51.

Required Determinations

Administrative Procedure Act (APA) (5 U.S.C. 551 et seq.)

Under section 553(b)(3)(B) of the APA, a proposed rule is not required ''when the agency for good cause finds (and incorporates the finding and a brief statement of reasons therefor in the rules issued) that notice and public procedure thereon are impracticable, unnecessary, or contrary to the public interest.'' There is good cause to forgo notice and public comment on a proposed rule in this instance and instead take immediate action because this IFR codifies the Department's existing procedures and implements new procedures regarding the development, review, and clearance of guidance documents as directed by E.O 13891. Additionally, it does not reach any right or benefit, substantive, or procedural, as an enforceable action against the United States or the Department. The Department finds good cause in accordance with 5 U.S.C. 553(d)(3) to make the IFR effective less than 30 days after the date of publication to allow for swift implementation of this program. Although this IFR is effective immediately, comments are solicited from the public on all aspects of the interim final rule. The Department will consider all public comments received in the development of a subsequent final rule.

Regulatory Planning and Review (Executive Orders 12866 and 13563)

E.O. 12866 provides that the Office of Management and Budget's (OMB's) Office of Information and Regulatory Affairs will review all significant rules. The Office of Information and Regulatory Affairs has determined that this rule is not significant.

E.O. 13563 reaffirms the principles of E.O. 12866, calling for improvements in the nation's regulatory system to promote predictability, to reduce uncertainty, and to use the best, most innovative, and least burdensome tools for achieving regulatory objectives. E.O. 13563 directs agencies to consider regulatory approaches that reduce burdens and maintain flexibility and freedom of choice for the public, where these approaches are relevant, feasible, and consistent with regulatory objectives. This IFR is in compliance with E.O. 13563 and is intended to promote predictability, to reduce uncertainty, and to use the best, most innovative, and least burdensome tools for achieving regulatory objectives.

Regulatory Flexibility Act

This IFR will not have a significant economic effect on a substantial number of small entities under the Regulatory Flexibility Act (5 U.S.C. 601 *et seq.*) as it will not directly impact small entities or impose any regulatory burdens on them.

Small Business Regulatory Enforcement Fairness Act

In accordance with section 213(a) of the Small Business Regulatory Enforcement Fairness Act of 1996, the Department will assist small entities in understanding this rule so that they can better evaluate its effects. If the IFR rule will affect your small business, organization, or governmental jurisdiction, and you have questions concerning its provisions, please contact the person listed in the **FOR FURTHER INFORMATION CONTACT** section of this rule. Small businesses may send comments on the actions of Federal employees who enforce or otherwise determine compliance with Federal regulations to the Small Business Administration's Small Business and Agriculture Regulatory Enforcement Ombudsman and the Regional Small Business Regulatory Fairness Boards. The Ombudsman evaluates these actions annually and rates each agency's responsiveness to small business.

Unfunded Mandates Reform Act

A statement containing the information required by the Unfunded Mandates Reform Act (2 U.S.C. 1531 *et seq.*) is not required.

This rule:

(a) Will not impose an unfunded mandate on state, local, or tribal governments or the private sector of more than $100 million per year.

(b) Will not have a significant or unique effect on State, local, or tribal governments, or the private sector.

Reducing Regulation and Controlling Regulatory Costs (E.O. 13771)

This rule is not an E.O. 13771 regulatory action because this rule is not significant under E.O. 12866.

Takings (E.O. 12630)

This proposed rule does not affect a taking of private property or otherwise have taking implications under Executive Order 12630. This rule is not a Government action capable of interfering with constitutionally protected property rights. It does not impose any obligations on the public

that would result in a taking. A takings implication assessment is not required.

Federalism (E.O. 13132)

Under the criteria in section 1 of E.O. 13132, this IFR will not have sufficient federalism implications to warrant the preparation of a federalism summary impact statement because it will not substantially and directly affect the relationship between the Federal and State governments. Accordingly, a federalism summary impact statement is not required.

Civil Justice Reform (E.O.12988)

This IFR complies with the requirements of E.O. 12988.

Specifically, this rule:

(a) Meets the criteria of section 3(a) of this E.O. which requires that all regulations be reviewed to eliminate errors and ambiguity and be written to minimize litigation; and

(b) Meets the criteria of section 3(b)(2) of this E.O. which requires that all regulations be written in clear language and contain clear legal standards.

Consultation With Indian Tribes (E.O. 13175)

The Department strives to strengthen its government-to-government relationship with federally recognized Indian tribes through a commitment to consultation and recognition of their right to self-governance and tribal sovereignty. Under the criteria in E.O. 13175 and Departmental Manual Part 512 Chapters 4 and 5, this IFR will have no substantial direct effects on federally recognized Indian tribes or Alaska Native Claims Settlement Act (ANCSA) Corporations, and consultation under the Department's consultation policies is not required.

Paperwork Reduction Act, 44 U.S.C. 3501, et seq.

This IFR does not contain any new collections of information that require approval by OMB under the Paperwork Reduction Act. This IFR will not impose recordkeeping or reporting requirements on State, local, or Tribal governments, individuals, businesses, or organizations.

National Environmental Policy Act

This IFR does not constitute a major Federal action significantly affecting the quality of the human environment. Pursuant to Departmental Manual 516 DM 2.3A (2), section 1.10 of 516 DM 2, Appendix 1 categorically excludes from the requirement to document an environmental assessment or impact statement policies, directives, regulations and guidelines of an administrative, financial, legal, technical or procedural nature; or the environmental effects of which are too broad, speculative or conjectural to lend themselves to meaningful analysis and will be subject to the NEPA process, either collectively or case-by-case. *See also* 43 CFR 46.210(i). The Department has reviewed this rule and determined that this categorical exclusion applies, and that none of the extraordinary circumstances that would preclude use of the categorical exclusion are applicable. *See* 43 CFR 46.215. Therefore, a detailed statement under the National Environmental Policy Act of 1969 (NEPA) is not required.

Effects on the Energy Supply (E.O. 13211)

This IFR is not a significant energy action under the definition in E.O. 13211; therefore, a Statement of Energy Effects is not required.

Plain Language

The Department is required by section 1(b)(12) of E.O. 12866 and Section 3(b)(1)(B) of E.O. 12988 and by the Presidential Memorandum of June 1, 1998, to write all rules in plain language. This means that this rule must:

(a) Be logically organized;

(b) Use the active voice to address readers directly;

(c) Use common, everyday words and clear language rather than jargon;

(d) Be divided into short sections and sentences; and

(e) Use lists and tables wherever possible.

If you feel that we have not met these requirements, please contact the person listed in the **FOR FURTHER INFORMATION CONTACT** section of this preamble.

Authority

The Department publishes this IFR in accordance with the APA as codified in the text of chapters 5 and 7 of Title 5, United States Code, that govern procedures for agency rulemaking and adjudication and provides for judicial review of final agency actions and E.O. 13891.

List of Subjects in 43 CFR Part 51

Administrative practice and procedure, Executive orders.

For the reasons discussed in the preamble, 43 CFR part 51 is added to read as follows:

PART 51—GUIDANCE DOCUMENTS PROCEDURES

Sec.
51.1 General.
51.3 Review and clearance by the Office of the Solicitor.
51.5 Requirements for clearance.
51.7 Public access to effective guidance documents.
51.9 Cost and benefit estimates.
51.11 Approval procedures for guidance documents identified as ''significant.''
51.13 Definition of ''significant guidance document.''
51.15 Designation procedures.
51.17 Notice-and-comment procedures.
51.19 Petitions for guidance.
51.21 Rescinded guidance.
51.23 Exigent circumstances.
51.25 Reports to Congress and the Comptroller General.
51.27 No judicial review or enforceable rights.

Authority: 5 U.S.C. Chapter 5, Subchapter II; Chapter 7, E.O. 13891, 84 FR 55235, 3 CFR, 2019 Comp., p. 371.

§ 51.1 General.

(a) This part governs the issuance of Departmental guidance documents.

(b) Subject to the qualifications and exemptions contained in this part, the procedures in this part apply to all guidance documents issued by all Bureaus/Offices of the Department of the Interior (the Department) after October 26, 2020.

(c) For purposes of this part, the term ''guidance document'' is any statement of agency policy or interpretation of a statute, regulation, or technical matter within the jurisdiction of the agency that is of general applicability and intended to have future effect on the behavior of regulated parties, that sets forth a policy on a statutory, regulatory, or technical issues or an interpretation of a statute or regulation, with certain exceptions. The term is not confined to formal written documents; guidance may come in a variety of forms, including (but not limited to) letters, memoranda, circulars, bulletins, advisories, and may include video, audio, and Web-based formats. *See* Office of Management and Budget (OMB) Bulletin 07–02, ''Agency Good Guidance Practices,'' (January 25, 2007) (''OMB Good Guidance Bulletin'').

(d) This part does not apply to the following documents, which are not included in the definition of ''guidance document'' for purposes of this part:

(1) Rules promulgated pursuant to notice and comment under 5 U.S.C. 553, or similar statutory provisions;

(2) Rules exempt from rulemaking requirements under 5 U.S.C. 553(a);

(3) Rules of agency organization, procedure, or practice;

(4) Decisions of agency adjudications under 5 U.S.C. 554 or similar statutory provisions;

(5) Internal guidance directed to the issuing agency or other agencies that is

not intended to have substantial future effect on the behavior of regulated parties; or

(6) Internal executive branch legal advice or legal advisory opinions addressed to executive branch officials that are not intended to have substantial future effect on the behavior of regulated parties.

§ 51.3 Review and clearance by the Office of the Solicitor.

All Departmental guidance documents, as defined in § 51.1(c), require review and clearance in accordance with this part.

(a) Guidance proposed to be issued by a Bureau/Office of the Department must be reviewed and cleared by the relevant Division of the Office of the Solicitor. In addition, as provided in paragraph (b) of this section, some Bureau/Office guidance documents will require review and clearance by the Immediate Office of the Solicitor.

(b) Guidance proposed to be issued by the Office of the Secretary must be reviewed and cleared by the Immediate Office of the Solicitor.

§ 51.5 Requirements for clearance.

The Department's review and clearance of guidance documents must ensure that each guidance document proposed to be issued by a Bureau/Office of the Department satisfies the following requirements:

(a) The guidance document complies with and cites all relevant statutes and regulations (including any statutory deadlines for agency action);

(b) The guidance document identifies or includes:

(1) The term ''guidance'' or its functional equivalent;

(2) The issuing Bureau/Office and the date of issuance;

(3) A unique identifier, including, at a minimum, the date of issuance and title of the guidance document and its Z-Regulatory Identification Number (Z–RIN), if applicable;

(4) The activity or entities to which the guidance applies;

(5) Citations to applicable statutes and regulations;

(6) A statement noting whether the guidance document intends to revise or replace any previously issued guidance document and, if so, sufficient information to identify the previously issued guidance document; and

(7) A short summary of the subject matter covered in the guidance document at the top of the document;

(c) The guidance document should not use mandatory language, such as ''shall,'' ''must,'' ''required,'' or ''requirement,'' unless the language is describing an established statutory, regulatory, or contractual requirement or is addressed to Department staff and will not foreclose the Department's consideration of positions advanced by affected private parties;

(d) The guidance document is written in plain and understandable English; and

(e) The guidance document must include a clear and prominent statement declaring that the contents of the document do not have the force and effect of law, except as authorized by law or as incorporated into a contract, and are not meant to bind the public in any way, except as authorized by law or as incorporated into a contract, and that the document is intended only to provide clarity to the public regarding existing requirements under the law or agency policies.

§ 51.7 Public access to effective guidance documents.

Each Bureau/Office that is responsible for issuing guidance documents must:

(a) Ensure all effective guidance documents, identified by a unique identifier which includes, at a minimum, the document's title and date of issuance or revision and its Z–RIN, if applicable, are on the Department's website in a single, searchable, indexed database, and available to the public in accordance with the notice titled ''Implementation of Executive Order 13891: Guidance Documents'';

(b) Note on its website that guidance documents lack the force and effect of law, except as authorized by law or as incorporated into a contract;

(c) Maintain and advertise on its website a means for the public to comment electronically on any guidance documents that are subject to the notice-and-comment procedures described in § 51.17 and to submit requests electronically for issuance, reconsideration, modification, or rescission of guidance documents in accordance with § 51.21; and

(d) Designate an office or official(s) to receive petitions for withdrawal or modification of guidance documents and address complaints from the public that the Bureau/Office is not following the requirements of OMB's Good Guidance Bulletin or is improperly treating a guidance document as a binding requirement.

§ 51.9 Cost and benefit estimates.

(a) The Bureau/Office must evaluate whether, although not legally binding, an agency guidance document may result in a substantial economic impact (*e.g.,* by inducing private parties to alter their conduct to conform to recommended standards or practices) where ''significant'' as defined by E.O. 12866. E.O. 12866 requires agencies to estimate the net benefits of regulations. Net benefits are defined as total benefits minus total costs. When it is determined that a guidance document will be economically significant, the Bureau/Office must prepare a Regulatory Impact Analysis and make it publicly available in the same manner it what would accompany an economically significant rulemaking.

(b) While it may be difficult to predict with precision the economic impact of voluntary guidance, the issuing Bureau/Office must, to the extent practicable, make a estimate the likely economic cost impact of the guidance document in order to determine whether the guidance document is economically significant. When a Bureau/Office is explaining to OMB's Office of Information and Regulatory Affairs (OIRA) whether it believes a guidance document is economically significant, it should, at a minimum, provide the same level of analysis that would be required for a major determination under the Congressional Review Act.[1]

§ 51.11 Approval procedures for guidance documents identified as ''significant.''

(a) Guidance documents proposed to be issued by a Bureau/Office must be submitted (or a summary of it) to the Office of the Executive Secretariat and Regulatory Affairs (OES). OES will submit these documents or summaries of them to OIRA for significance determinations. If OIRA determines that a proposed guidance document is significant, then the Bureau/Office must obtain a Z–RIN and clearance through the Data Tracking System (DTS) or successor data management system. Each proposed guidance document determined to be significant must be approved by the Secretary before issuance.

(b) As with regulations or rules, including significant regulatory actions, OES will submit significant guidance documents to OIRA consistent with the requirements set forth in § 51.13(c). In addition, OES may determine that it is appropriate to coordinate with the Office of the Secretary and OIRA in the review of guidance documents.

(c) Significant guidance documents must be reviewed by OIRA under E.O. 12866 before issuance and must demonstrate compliance with the applicable requirements for regulations or rules, including significant regulatory actions.

[1] See OMB Memorandum M–19–14, Guidance on Compliance with the Congressional Review Act (April 11, 2019).

(d) If the guidance document is determined not to be significant as defined by § 51.13, OES will advise the proposing Bureau/Office to proceed with issuance of the guidance through its standard clearance process.

§ 51.13 Definition of "significant guidance document."

(a) The term ''significant guidance document'' means a guidance document that may reasonably be anticipated to:

(1) Lead to an annual effect on the economy of $100 million or more or adversely affect in a material way the U.S. economy, a sector of the U.S. economy, productivity, competition, jobs, the environment, public health or safety, or State, local, or tribal governments or communities;

(2) Create serious inconsistency or otherwise interfere with an action taken or planned by another Federal agency;

(3) Alter materially the budgetary impact of entitlements, grants, user fees, or loan programs or the rights and obligations of recipients thereof; or

(4) Raise novel legal or policy issues arising out of legal mandates, the President's priorities, or the principles set forth in E.O. 12866, as further amended.

(b) The term ''significant guidance document'' does not include the categories of documents excluded by § 51.1(d) or any other category of guidance documents exempted in writing by OIRA in consultation with OES.

(c) Significant guidance documents must:

(1) Be reviewed by OIRA under E.O. 12866 before issuance;

(2) Be approved on a non-delegable basis by the Bureau/Office head or by an agency component head appointed by the President, before issuance; and

(3) Demonstrate compliance with the applicable requirements for regulations or rules, including significant regulatory actions, set forth in Executive Orders 12866, 13563, 13609, 13771, 13777, and 13893.

§ 51.15 Designation procedures.

(a) The OES may request a Bureau/Office to prepare a designation request for certain guidance documents. Designation requests must include the following information:

(1) A summary description of the guidance document; and

(2) The Bureau/Office recommended designation of ''not significant,'' ''significant,'' or ''economically significant,'' as well as a justification for that designation.

(b) OES must seek significance determinations from OIRA for guidance documents in the same manner as for regulatory actions. Prior to publishing such guidance documents, and with sufficient time to allow OIRA to review the document in the event that a significance determination is made, OES will provide OIRA with an opportunity to review the designation request or the guidance document, if requested, to determine if it meets the definition of ''significant'' under Executive Order 13891.

§ 51.17 Notice-and-comment procedures.

(a) Except as provided in paragraph (b) of this section, all proposed Department guidance documents determined to be a ''significant guidance document'' within the meaning of § 51.13 will be subject to the following informal notice-and-comment procedures prior to issuance. The issuing Bureau/Office must:

(1) Publish a notice in the **Federal Register** announcing that a draft of the proposed guidance document is publicly available;

(2) Post the draft guidance document on its website;

(3) Invite public comment on the draft document for a minimum of 30 days through a **Federal Register** notice;

(4) All public comments received must be posted and made publicly available; and

(5) Prepare and post public responses to major concerns raised in the comments, as appropriate, on its website, and through a **Federal Register** notice either before or when the guidance document is finalized and issued.

(b) The requirements of paragraph (a) of this section will not apply to any significant guidance document or categories of significant guidance documents for which OES finds, in consultation with OIRA, the proposing Bureau/Office, Solicitor, Assistant Secretary, and the Secretary, that good cause exists such that notice and public procedure thereon are impracticable, unnecessary, or contrary to the public interest (and incorporates the finding of good cause and a brief statement of reasons therefor in the guidance issued). Unless OES advises otherwise in writing, the categories of guidance will be exempt from the requirements of paragraph (a) of this section.

(c) Where appropriate, OES or the proposing Bureau/Office may recommend to the Secretary that a particular guidance document that is not a significant guidance document should be subject to the informal notice-and-comment procedures described in paragraph (a) of this section.

§ 51.19 Petitions for guidance.

Any person may petition the Secretary, through an electronic submission, to issue new, or withdraw or modify, a particular guidance document by using the procedures found in 43 CFR part 14 (§§ 14.1 through 14.4). The Secretary will delegate the petition to the appropriate Bureau/Office, which should respond to all requests in a timely manner but must respond no later than 90 days after receipt of the request.

§ 51.21 Rescinded guidance.

A Bureau/Office may not cite, use, or rely on guidance documents that are rescinded, except to establish historical facts.

§ 51.23 Exigent circumstances.

In emergency situations or when the issuing Bureau/Office is required by statutory deadline or court order to act more quickly than normal review procedures allow, the issuing Bureau/Office must coordinate with OES to notify OIRA as soon as possible and, to the extent practicable, must comply with the requirements of this part at the earliest opportunity. Wherever practicable, the issuing Bureau/Office should schedule its proceedings to permit sufficient time to comply with the procedures set forth in this part.

§ 51.25 Reports to Congress and the Comptroller General.

Unless otherwise determined in writing by OES, it is the policy of the Department that upon issuing a guidance document determined to be ''significant'' within the meaning of § 51.13, the issuing Bureau/Office will submit a report to Congress and the Comptroller General in accordance with the procedures described in 5 U.S.C. 801 (the ''Congressional Review Act'').

§ 51.27 No judicial review or enforceable rights.

This part is intended to improve the internal management of the Department. As such, it is for the use of Department personnel only and is not intended to, and does not, create, any right or benefit, substantive or procedural, enforceable at law or in equity by any party against the United States, its agencies or other entities, its officers or employees, or any other person.

Dated: September 28, 2020.

Katharine Sinclair MacGregor,

Deputy Secretary, U.S. Department of the Interior.

[FR Doc. 2020–22238 Filed 10–23–20; 8:45 am]

BILLING CODE 4334–63–P

DEPARTMENT OF THE INTERIOR

Bureau of Land Management

43 CFR Part 3500

[LLW0320000 L13300000 PP0000 20X]

RIN 1004–AE58

Non-Energy Solid Leasable Minerals Royalty Rate Reduction Process

AGENCY: Bureau of Land Management, Interior.

ACTION: Final rule.

SUMMARY: The Bureau of Land Management (BLM) is amending its regulations to revise the process for lessees to seek and for the BLM to grant reductions of rental fees, royalty rates, and/or minimum production requirements associated with all non-energy solid leasable minerals. This final rule streamlines the process for such reductions for non-energy solid minerals leased by the Federal Government and codifies the BLM's authority to issue an area- or industry-wide reduction on its own initiative. Existing regulatory requirements are overly restrictive, inflexible, and burdensome. A report from the Senate Committee on Appropriations on the 2019 Department of the Interior, Environment, and Related Agencies Appropriations Bill encouraged the BLM to work with soda ash producers to reduce the Federal royalty rate, as appropriate. This final rule gives the BLM more flexibility to respond to changing market dynamics and to promote development of the Federal mineral estate when deemed necessary.

DATES: This final rule is effective on November 25, 2020.

FOR FURTHER INFORMATION CONTACT: Lindsey Curnutt, Acting Division Chief of Solid Minerals, WO–320; 480–708–7339. Persons who use a telecommunications device for the deaf (TDD) may call the Federal Relay Service (FRS) at 1–800–877–8339, 24 hours a day, 7 days a week, to leave a message or question with the above individuals. You will receive a reply during normal business hours.

SUPPLEMENTARY INFORMATION:

I. Background
II. Discussion of the Final Rule and Comments on the Proposed Rule
III. Procedural Matters

I. Background

Pursuant to the Mineral Leasing Act of 1920 (MLA), 30 U.S.C. 181 *et seq.,* and other legal authorities, the BLM is authorized to lease deposits of certain minerals on lands owned by the United States. In addition to commonly known energy resources, such as coal, oil, and gas, the MLA authorizes the BLM to lease non-energy minerals, such as gilsonite, phosphate, sodium, potassium, and sulfur. The BLM regulations implementing this authority for solid minerals (other than coal) are found at 43 CFR part 3500—Leasing of Solid Minerals Other than Coal and Oil Shale. As described in § 3501.2, the subject minerals are those minerals other than oil, gas, coal and oil shale, leased under the mineral leasing acts, and those hardrock minerals leasable under Reorganization Plan No. 3 of 1946, on any unclaimed, undeveloped area of available public domain or acquired lands on which leasing of these specific minerals is allowed by law. Special areas identified in 43 CFR part 3580 and asphalt on certain lands in Oklahoma also are leased under this part. Leasing these minerals on Federal land provides valuable revenue to the states and the Federal Government.

The United States was once the leading producer in the world of one such mineral, sodium carbonate (natural soda ash), before falling behind China in 2003.[1] This change stimulated a move in Congress to provide relief to American soda ash producers. The Soda Ash Royalty Reduction Act of 2006 (SARRA) (Pub. L. 109–338) prescribed a reduced 2 percent royalty rate for sodium compounds produced from Federal land in the 5-year period beginning on October 12, 2006.[2] Additionally, the Helium Stewardship Act of 2013 (Pub. L. 113–40) included a provision that set a 4 percent royalty rate on soda ash for a 2-year period, which ended on October 1, 2015. These reductions have expired.

The minimum royalty rates for soda ash, along with other non-energy solid minerals on Federal lands, are set in the MLA and BLM regulations (see 43 CFR 3504.21). The MLA authorizes the Secretary to establish royalty rates higher than the minimum, along with rental fees and minimum production requirements through regulation. The BLM sets the royalty rates for each lease at or above the specified minimum royalty rate (see 43 CFR 3504.22) based on current market conditions at the time of lease issuance, but those conditions may change over the life of the lease and may be dynamic based upon global supply.

Section 39 of the MLA, 30 U.S.C. 209, authorizes the Secretary to reduce royalty rates and rental fees on mineral leases for the purpose of encouraging the greatest ultimate recovery, and in the interest of conservation of natural resources, whenever the Secretary determines it is necessary to do so in order to promote development, or when the Secretary determines that leases cannot be successfully operated under the existing terms.

The BLM regulations contain a process for reducing royalty rates, along with rental fees and minimum production requirements, for non-energy solid minerals leased by the Federal Government in 43 CFR subpart 3513—Waiver, Suspension or Reduction of Rental and Minimum Royalties. The process described in this subpart of the regulations imposes requirements beyond what section 39 of the MLA, 30 U.S.C. 209, requires. The BLM has reviewed the existing regulatory requirements for non-energy solid minerals and has determined that the royalty reduction process codified in 43 CFR subpart 3513 is unnecessarily restrictive, inflexible, and burdensome. See § 3513.15 of the section-by-section discussion of this preamble for a more detailed discussion of the overly burdensome requirements that this final rule removes.

The BLM promulgated the current regulations during the late 1990s to ''streamline and rewrite necessary regulations in plain English.'' [3] The effect of rewriting the language, however, introduced some substantive changes as compared with the previous regulations by requiring those who are seeking a reduction to submit specific information in all applications that may not always be necessary. In contrast, previous versions of the royalty rate reduction regulations from 1946, 1964, and 1983 were more closely aligned with the statutory language and did not list specific data requirements for an application.

This final rule streamlines the process to reduce rental fees, royalty rates, or minimum production requirements for all non-energy solid minerals leased by the Federal Government, without altering the substantive criteria that BLM will use to determine whether a

[1] Dennis S. Kostick, U.S. Geological Survey, 2005 *Minerals Yearbook:* Soda Ash 70.1 (2006).

[2] The SARRA required that the Department report to Congress on the impacts of the 2-percent royalty rate. The report to Congress, completed in 2011, concluded that while total sales revenues from Federal Soda Ash leases increased, royalty revenues were significantly lower than they would have been absent the SARRA and that as a result of the lower 2-percent royalty rate, soda ash production had shifted away from state and private land leases onto Federal leases.

[3] ''The purpose of this rule is to comply with President Clinton's government-wide regulatory reform initiative to eliminate unnecessary regulations, and streamline and rewrite necessary regulations in plain English.'' 64 FR 53,512, 53,512 (Oct. 1, 1999).

reduction is appropriate, removing unnecessary and overly burdensome requirements. Additionally, this final rule codifies in regulation the BLM's authority to implement area- or industry-wide reductions on the BLM's own initiative, thus giving greater effect in 43 CFR part 3500 to the broad authority that the MLA grants to the Secretary of the Interior to reduce rental fees, royalty rates, and/or minimum production requirements to promote development. This improves the BLM's ability to provide relief to producers of non-energy solid leasable minerals from burdens such as geological hardships [4] and market transformations.

This final rule also aligns with the recommendations of congressional committees. The American Soda Ash Competitiveness Act was introduced in Congress in 2017 and recommended setting the Federal royalty rate for soda ash at the minimum of 2 percent for a 5-year period. Although this proposed legislation was not enacted, the Senate Committee on Appropriations expressed concern about keeping the United States competitive in the global soda ash market, and encouraged ''the Bureau to work with soda ash producers to assist them in reducing royalty rates and [directing] the Bureau to take the necessary steps to reduce the Federal royalty rate for soda ash as appropriate.'' S. Rep. No. 115–276, at 14 (2018). The House Appropriations Committee also noted in an explanatory statement for the 2018 Interior, Environment, and Related Agencies Appropriations bill that the Committees are concerned about maintaining the United States' global competitiveness in the production of natural soda ash. The United States contains approximately 90 percent of the world's natural soda ash deposits, while many international competitors are producing synthetic soda ash using more energy and generating higher emissions than natural soda ash production. Therefore, the Committees expect the Bureau to consider using its authority to reduce the Federal royalty rate for soda ash to 2 percent.[5]

By clarifying the BLM's authority to reduce the royalty rate for soda ash and other non-energy solid leasable minerals in general (*i.e.,* for the industry as a whole or for a particular area) in the absence of an individual lease-by-lease application submitted by a leaseholder seeking a reduction for specific leases in an operation, this final rule simplifies the process the BLM would need to go through if it were to determine certain area- or industry-wide royalty rate reductions were appropriate to promote development. In such a scenario, if a leaseholder is operating under a pre-existing reduction at the time of an area wide reduction, the lease will operate at the pre-existing reduction unless the area wide reduction is at a lesser rate.

The BLM has a history of receiving applications requesting royalty rate reductions for commodities such as lead-zinc, gilsonite, and potash. Since the early 1990s the BLM has received between ten and fifteen applications seeking a reduction, and approximately half of those were considered complete applications. The BLM has approved about five applications for reduction since 1993. Although the BLM has no history of implementing area- or industry-wide royalty rate reductions in the context of non-energy solid leasable minerals under 43 CFR part 3500, the BLM has reduced royalty rates on an area-wide basis for coal leases under section 39 of the MLA, 30 U.S.C. 209. As an example, the BLM reduced the royalty rate for coal leases in a specific area of North Dakota in the spring of 2019 to 2.2 percent as a ''category 5'' reduction due to market conditions.

Executive Order 13817, ''A Federal Strategy to Ensure Secure and Reliable Supplies of Critical Minerals,'' emphasizes the need for the United States to domestically source critical minerals. The Secretary of the Interior published a ''Final List of Critical Minerals'' on May 18, 2018. This list includes commodities that can be leased as non-energy minerals, such as potash and metals like lithium or rare earth on any unclaimed, undeveloped area of public domain and on acquired lands. This final rule would further the goals of E.O. 13817 by improving the BLM's ability to react to unforeseen market forces and ensure continued production of critical minerals on Federal lands.

Over the past two decades, U.S. natural soda ash production has grown at an average annual rate of 0.9 percent, from 11.1 million short tons (MMst) in 1998 to 13.2 MMst in 2018, which comprised 22 percent of world soda ash production in 2018.[6] During this period, however, Chinese synthetic soda ash production grew at a 6.4 percent annual rate, rising from less than one-quarter of world total soda ash production to nearly half.[7] China has used the Hue and Solvay synthetic processes to ramp up its soda ash production, surpassing U.S. total production in 2003,[8] and producing double the U.S. volume in 2011.[9]

Although China's soda ash production has largely focused on producing glass for its automotive and construction industries (among others), its rise has reduced the ability of U.S. producers to satisfy the burgeoning demand for the mineral. It has also caused the U.S. share of world soda ash production to decline from 31 percent of the world total in 1998 to 22 percent in 2018. Moreover, while China's more expensive synthetic soda ash production has largely gone to its domestic manufacturing industry, relatively low-cost natural soda ash produced from Turkey's significant trona ore deposits compete directly with U.S. exports to countries in the European Union and elsewhere. Recent announcements point to soda ash production expansions in Turkey, as well as in Belarus, Kazakhstan, Uzbekistan, India, Thailand, and Pakistan.[10]

It is the BLM's view that in light of world market developments, including those described above, this final rule is necessary to keep the United States competitive in the world markets of non-energy solid leasable commodities. The BLM also views the rule as necessary to promote development of non-energy solid leasable mineral resources in accordance with the MLA, particularly during periods of market fluctuation. For example, from 2008 to 2010, the price of soda ash, as with many other commodities, spiked and then dropped precipitously, threatening industry proponents' ability to operate successfully while paying all related royalties and taxes.

The changes in this final rule will not adversely affect the processing time for royalty rate reduction applications. On the contrary, the changes will reduce the time required for a lessee to compile and complete applications. Moreover, the rule will allow the BLM to implement industry- or area-wide reductions on its own initiative in

[4] Geological hardships are circumstances that may slow or stop mining in a given area. These hardships may include such things as a thinning deposit, becoming exhausted, changing in composition, or running into an underground barrier, such as a structure that compromises the integrity and or grade of the deposit. Such circumstances often cannot be foreseen at the time of leasing.

[5] An Explanatory Statement for the Department of the Interior, Environment, and Related Agencies Appropriations Bill, 2018.

[6] U.S. Geological Survey (USGS) *Minerals Yearbook* data, editions from 2002 through 2018.

[7] USGS *Minerals Yearbook* data through 2017, with National Bureau of Statistics of China monthly data from January through October 2018 used to project the 2018 total.

[8] Dennis S. Kostick, U.S. Geological Survey, 2005 *Minerals Yearbook:* Soda Ash 70.1 (2006).

[9] Wallace P. Bolen, U.S. Geological Survey, 2014 *Minerals Yearbook:* Soda Ash 70.1 (2015).

[10] Wallace P. Bolen, U.S. Geological Survey, 2016 *Minerals Yearbook:* Soda Ash 70.1 (2016).

accordance with section 39 of the MLA, 30 U.S.C. 209.

II. Discussion of the Final Rule and Comments on the Proposed Rule

Discussion of Comments by Topic

General Comments

Comment: Some commenters opposed the rulemaking and asserted that environmental impacts will increase due to increased access to leasing and ramping up of production. A commenter suggested that ''regulations should not be streamlined for economic reasons'' and that ''environmental fortitude should be valued above international trade and local mining operations''.

Response: This rule does not reduce any royalties, but merely changes the process by which certain royalty reductions may be considered and made. No royalties will be reduced unless and until a subsequent decision or decisions are made pursuant to this rule. Therefore, this rule will not result in any environmental impacts. Moreover, a reduced royalty does not change the amount of acreage that has been leased or the amount of minerals in the leased lands. Instead, such a royalty allows an operator to continue mining the same volumes that were available to develop under an approved mining plan, but with a lower royalty payment. BLM does not anticipate that reduced royalties will increase the footprint on Federal leases or result in increased environmental impacts on public lands.

Moreover, reduced royalties only apply to existing leases with approved mine plans, which have already undergone environmental analysis in compliance with NEPA regulations, not to new development, therefore there is no increased footprint from a royalty reduction. Before BLM can approve a mine plan of operations, a NEPA analysis is conducted. Heretofore, a CX has been completed for reductions on leases that have already undergone an environmental analysis for their associated mine plan of operations. The CX for a royalty rate reduction has been done in accordance with our NEPA handbook H–1790–1 Appendix 4, F4 on page Appendix 4–152.

Comment: Some commenters expressed concern that lowered royalty rates will reduce revenue to states, including funds for local school districts. The commenters stated that recent earthquakes caused damage to local infrastructure and that earthquake recovery efforts would cost the school district in the vicinity of the earthquake several millions of dollars.

Response: In 2019, the federal government collected $57.1 million in Royalties from non-energy solid leasable minerals, 49% of which was transferred back to the states, totaling $28 million. By comparison, $3.2 billion dollars was collected from oil, gas, and coal in 2019, of which the states also received 49%, totaling $1.6 billion. This means that royalties from non-energy solid leasable operations on federal lands only make up 1.7% of total royalties paid to the states, so temporary reductions for which a lessee might qualify would not substantially affect total royalties received by the states. Moreover, it should be noted that such temporary reductions may increase aggregate state revenues by allowing certain operations to continue (rather than decrease production or shut down entirely), thereby assuring that payments to the State would continue over a longer period. The statute provides authority to reduce royalty rates in order to ensure the ''greatest ultimate recovery'' of the mineral. 30 U.S.C. 209. If an operator is forced to close due to a shift in economic conditions or hardships, it could lead to job losses and minerals left undeveloped over the long term. The ability to provide flexibility to royalty rates may allow for production to remain economic and keep operations going, leading to the greater ultimate recovery of the resource and continued royalty payments to the states. The BLM does not have control over the way in which states allocate funds after royalties are paid. The BLM does not expect a change of revenues from promulgation of this rule, as it does not directly affect royalty rates. If the BLM were to reduce royalty rates subsequent to this rulemaking, there may be a decrease in revenues collected in order to ensure the greatest ultimate recovery. Because this rule does not directly affect royalty rates, the BLM cannot at this time assess the impact of specific royalty rate adjustments that may be implemented at a future date. For instance, in some cases, a royalty rate reduction may allow operations and royalty revenue to continue that may otherwise have ceased.

Comment: Many commenters supported the rule change, specifically pertaining to soda ash, potash, and gilsonite. However, some commenters appeared to mistakenly assume that the final rule would implement an automatic royalty rate reduction for certain industries.

Response: The final rule does not reduce the royalty rates for any mineral. Instead, it will streamline the application process and will allow the BLM to consider whether it will issue an area- or industry-wide reduction on its own initiative for non-energy solid minerals leased by the Federal Government, if the BLM determines that such a reduction is necessary in order to promote development. This will improve the BLM's ability to provide relief to producers of non-energy solid leasable minerals, including soda ash, potash, and gilsonite, from burdens, such as geological hardships and market fluctuations, when necessary. The final rule is intended to promote development of the mineral resources in accordance with section 39 of the MLA (30 U.S.C. 209).

Comment: Some commenters suggested that the BLM should consider updating and publishing its guidance documents, including the Non-Energy Solid Leasable Handbook H–3500–01, to be consistent with any rule amendments or additions.

Response: The BLM will update its guidance documents following this rulemaking, including the Non-Energy Solid Leasable Handbook H–3500–01, to further clarify the parameters of reductions. Updates to the rule's implementing guidance will be coordinated with OMB. The updated handbook will be posted online and available to the public via the guidance document section of the Department of the Interior's Electronic Library of the Interior Policies (ELIPS) website (*https://www.doi.gov/elips/browse*). Current guidance can be found in BLM Manual Section 3485—Reports, Royalties, and Records, December 17, 1990 (*https://www.blm.gov/sites/blm.gov/files/uploads/mediacenter_blmpolicymanual3485.pdf*).

Comment: One commenter suggested that the BLM should decline receiving any royalties from potash, leaving the balance to be deposited to the states from which potash is mined. That would decrease the amount of royalties paid by the respective industries while not hurting the entities benefiting from the royalties in those states.

Response: The BLM is required to collect royalties on federally owned minerals as described in the Mineral Leasing Act at 30 U.S.C. 181 and 43 CFR 3504.20, which states: ''you must pay royalties on any production from your lease in accordance with the terms specified in the lease.'' Any potential revisions to 43 CFR 3504.20 would be outside the scope of this rulemaking.

Market Conditions

Comment: Many commenters expressed support for the final rule, including the new provision that codifies the BLM's authority to issue an area- or industry-wide reduction on its

own initiative. These commenters expressed support for the BLM's use of an industry-wide reduction or reductions to support producers on public lands in the domestic and global markets.

Response: In accordance with section 39 of the MLA (30 U.S.C. 209) and with this final rule, the BLM may issue a reduction on its own initiative when it determines ''it is necessary to do so in order to promote development.'' Following publication of this final rule, the BLM will consider all available and applicable information when determining whether such a reduction is necessary.

Comment: Some commenters provided detailed information about the historical trends and projected future of the soda ash market, which included an expectation for domestic demand to remain flat for the foreseeable future. Some commenters also provided information about market conditions for other commodities, as well as information about international production.

Response: While the BLM did not make any changes to the final rule as a result of these comments, this is the kind of data that the BLM would find useful in the future when determining whether it is necessary to issue an industry-wide or area-wide reduction to promote development. Lessees are welcome to present helpful data at any time. This rule does not implement a royalty rate reduction but merely clarifies the procedures for doing so.

Application Process

Comment: Many commenters supported the BLM's revisions to streamline the application process. These commenters agreed that it is unnecessary for applicants to submit some of the information required in the current regulation and that the changes do not alter the substantive criteria.

Response: The BLM appreciates the support for this rule.

Comment: Some commenters noted that in some cases, royalty rates are lower on State leases than on Federal leases. They also noted that it is often less expensive for a company to mine a commodity on privately held lands than on public lands.

Response: Although the BLM did not make any changes to the final rule in response to this comment, this is the sort of information that should be included in applications for reductions that are submitted by operators under § 3513.15 of this rule.

Comment: A commenter asserted that every effort should be made to facilitate domestic critical mineral production. The commenter not only supported the changes in the proposed rule concerning rent and royalty reduction requests, but also argued that the Federal processes for obtaining mine permits should be streamlined more generally.

Response: The additional changes supported by the commenter are beyond the scope of this rulemaking. We note that the BLM may take additional actions in the future to facilitate the production of critical minerals on public lands.

Comment: Some commenters provided a suggested revision to proposed § 3513.15(f), which proposed to describe the information necessary to support a reduction request for a minimum mineral production requirement. The proposed rule would have required that the applicant submit ''complete information'' with a reduction request. The commenters believe that such a requirement is unnecessarily broad and recommend that the rule require only ''the information sufficient to demonstrate'' the need for the reduction.

Response: The BLM agrees with this comment and has revised § 3513.15(f) in the final rule. See the discussion of § 3513.15 for more information about this change.

Comment: Some commenters believe that an additional paragraph should be added under § 3513.17(c), authorizing the BLM to grant an extension to an existing rate reduction if the economic conditions continue to warrant such reduction. The commenters suggest that this would obviate the need for the creation and filing of a completely new reduction request.

Response: The royalty rate at which a commodity is set is analyzed by the same criteria regardless of the type of request. Therefore, a regulatory mechanism for an extension would be redundant. An operator that was granted a reduction under § 3513.15 could apply for another reduction after the initial reduction ends and could reuse any information in a new application that has not changed since the initial application was submitted.

Area and Industry Wide Reductions

Comment: Some commenters agreed with the BLM that the MLA explicitly grants the BLM the authority to lower royalty rates to promote development, based on any information available to it, including information submitted in lease-specific applications. The commenters noted that the MLA does not limit the information that the BLM may consider in exercising its judgment. Some commenters support the addition of § 3513.17, but encourage the BLM to broaden the language of the rule to clarify that lessees or industry representatives may request the BLM to reduce royalties or the minimum production amount under 3513.17(a), instead of allowing the BLM to do so on its own initiative only.

Response: The BLM may use information received through the application process under § 3513.15 when determining whether an area- or industry-wide reduction is necessary to promote development. This rule does not disallow lessees or industry representatives from submitting to the BLM any communications about whether an area- or industry-wide reduction is warranted. The BLM may consider any applicable data submitted by the public when evaluating an industry wide or area wide reduction.

This final rule also does not limit how many operators could jointly file an application, so long as information is included ''for all leases involved.'' If several interested parties jointly submit an application for a royalty rate reduction, the BLM could approve that application for the leases identified in the application or could initiate an industry-wide reduction under § 3513.17(a).

Comment: Some commenters asserted that the BLM should prepare a competitive analysis before granting an area-wide rate reduction. These commenters expressed concern that issuing a reduction in one area could cause direct and indirect competitive impacts on the affected industry at large, as well as individual members of that industry. In addition, these commenters stated that there is potential for BLM rate reductions in one region of the country to have unintended and anti-competitive impacts to market participants in other regions.

Response: As described in the section-by-section analysis, an area-wide reduction would generally be issued to overcome a geological hardship in a specific area. Such a reduction would be limited to a specific period of time. If the BLM determines that a condition impacts more than one specific area, it could initiate an industry-wide reduction under § 3513.17(a). The BLM will determine what analysis is necessary on a case-by-case basis, but no change to the rule is necessary. The level and type of analyses appropriate to a particular case may differ from case to case, and it would be inefficient for the regulations to impose unnecessary or overly burdensome requirements on the process.

Timing and Fixed Tonnage

Comment: The BLM received comments both in favor of, and opposed to, timing restrictions for a reduction. Some commenters believed that the BLM should not issue a reduction for less than 10 years, because anything less than 10 years would not provide sufficient stability for the affected industry.

Response: The BLM will determine the appropriate length of time for each reduction based on the best available information. For more information about the 10-year limit on reductions, see the section-by-section discussion of § 3513.17(c). The final rule will retain the flexibility to issue a reduction for less than 10 years. The BLM recognizes that some business decisions will be made based on this timeframe, and will designate appropriate timeframes based on the best data available to provide more certainty to affected parties and communities, facilitating longer-term planning, investment, and hiring decisions.

Comment: Some commenters suggested that the timeframe of a reduction should take into account the time it can take a company to launch a plant or mine expansion. The commenters encouraged the BLM to look for constructive ways to ensure that the full extent of royalty relief is made available by allowing for the tolling of the royalty reduction for projects that are under construction, until they are completed.

Response: The BLM will take into account all available information when determining the appropriate length of time for a reduction. If a project takes longer to complete than the length of the reduction, the lessee could apply for an additional reduction under § 3513.15 if the lessee would be unable to meet the terms and conditions of the lease. Lessees should recognize that these reductions are temporary in nature, and business decisions should not be made that assume that a reduction will be in place for longer than the period of time for which the reduction is issued. This rule does not implement a royalty rate reduction but merely clarifies the procedures for doing so.

Comment: Some commenters disagreed with the BLM's being able to apply a fixed tonnage rather than applying a time limit. These commenters expressed frustration and confusion with BLM's explanation in the preamble of its proposal as to how this fixed tonnage amount would be determined.

Response: The BLM revised the preamble in the final rule to more clearly explain how a fixed tonnage is determined. A tonnage constraint allows for a royalty rate reduction to be applied without a time limit for a designated ore block and gives BLM the flexibility to apply the best reduction strategy for a given application or area. The use of a fixed tonnage could prevent a lessee from exploiting a reduction issued by the BLM to produce excessive quantities of a commodity at a reduced rate. Some geologic hazards may present a challenge where it would be difficult to estimate how long it would take for a lessee to overcome the problem presented by a particular hazard, and a fixed tonnage could provide the BLM flexibility to provide relief without a time constraint on the lessee.

Comment: A commenter expressed concern that the proposed rule would not require the BLM to notify lessees when a reduction ends.

Response: The BLM will issue a reduction with a specific end date or a maximum fixed tonnage. The lessee is responsible for adhering to the agreed terms of the reduction. The BLM case file will include the terms of this agreement, and a lessee may consult with the BLM if the lessee needs this information. It will also be BLM policy to notify lessees before and when reductions end. This information is included in the initial notification letter describing the royalty rate reduction, its start and end date, and the reduced rate.

Comment: A commenter suggested that the BLM should clarify in the final rule that it will not adjust the time period for a rate reduction after that reduction has already been issued, unless the BLM determines, after providing the applicant with notice and an opportunity to be heard, that the criteria for the rate reduction are no longer present.

Response: The BLM recognizes that lessees may make planning, investment, and hiring decisions as a result of the BLM's issuing a reduction. The BLM makes these determinations on a case-by-case basis with the best available information, but recognizes that some estimates may not align exactly with the time needed to overcome a hardship. The final rule includes a 10-year limit to prevent unnecessary loss of revenue. Under new paragraph 3513.17(d), the BLM will not end a reduction before the end of the term or fixed tonnage originally identified.

Section-by-Section Discussion of the Final Rule

The regulations in 43 CFR part 3500 are authorized by the Mineral Leasing Act of 1920 (30 U.S.C. 181 *et seq.*) and other statutory authorities as listed in 43 CFR 3501.1. This final rule revises the authority citation for part 3500 by adding section 39 of the MLA (30 U.S.C. 209), which authorizes the Secretary to reduce royalty rates and rental fees. This is consistent with other provisions in this final rule and is not a substantive change.

The final rule streamlines the process to apply for rental fee, royalty rate, and minimum production requirement reductions for non-energy solid mineral leases. This final rule also reduces the burden on lease holders by simplifying the regulatory requirements to better align the regulations with the statute.

You may find the BLM regulations that implement this authority for solid minerals (other than coal) in 43 CFR subpart 3513—Waiver, Suspension or Reduction of Rental and Minimum Royalties.

Section 3513.11 May BLM relieve me of the lease requirements of rental, minimum royalty, or production royalty while continuing to hold the lease?

Section 3513.11 states that the BLM has a process that allows for temporary relief from the rental, minimum royalty, or production royalty provisions in a lease. The BLM considers applications submitted under § 3513.15 on a case-by-case basis based on the data in the application for relief from lease requirements. This existing section is the introductory provision in subpart 3513, which explains that process in greater detail. The BLM Manual Section 3485-Reports, Royalties, and Records, December 17, 1990 (*https://www.blm.gov/sites/blm.gov/files/uploads/mediacenter_blmpolicymanual3485.pdf*), includes guidance for processing applications for temporary relief from the rental, minimum royalty, or production royalty provisions and will be updated following this rulemaking.

This final rule adds to § 3513.11 a citation to the relevant section of the Mineral Leasing Act (30 U.S.C. 209). This is not a substantive change.

Section 3513.15 How do I apply for reduction of rental, royalties, or minimum production?

Section 3513.15 sets out the information that a lessee must include in an application to BLM. The BLM needs the information provided in an application to determine whether the request satisfies the reduction criteria described in 43 CFR 3513.12.

This final rule removes the requirement to submit two copies of an application, because two copies are no longer necessary. When the BLM promulgated these regulations, lessees

submitted applications to the BLM via hard copy mail and the BLM used both paper copies during its processing. The BLM is able to receive and process these applications electronically, or the BLM is able to make physical or electronic copies of the paper submissions.

Section 3513.15(d) in the current regulations requires an application to include a description of the lands for which the reduction would apply. This final rule revises this requirement to be applicable only when the application is for a portion of the lease or leases. If the application is for the lease in its entirety, the BLM already has that information on hand, and a land description would not be necessary for that application. This revision makes the application easier to complete and improves processing timeliness.

This final rule removes paragraphs (f) and (h) of the previous regulations, which required a tabulated statement of the leasable minerals mined for each month, covering at least the last twelve months before a lessee files an application; the average production mined per day for each month; a detailed statement of the expenses and costs of operating the entire lease; and the income from the sale of any leased products. This information is not required under the final rule, because the BLM already knows the quantity of leasable minerals that the lessees are mining on each lease. The BLM can extrapolate the average production mined per day from production records and mine plan reports that the lessee already submits to the BLM and Office of Natural Resources Revenue (formerly Mineral Management Service) for royalty payment purposes and to prove that the lessee is meeting minimum production requirements as indicated on its lease form in accordance with 43 CFR 3504.20. Similarly, the Office of Natural Resources Revenue also gathers information pertaining to income from the sale of minerals. The detailed statement of expenses and costs is not necessary for the application because the reduction is based on market conditions and geologic interferences that are not tied to past costs and expenses. BLM may request information under the new 43 CFR 3513.15(h) (formerly (l)) if it finds that such information would be necessary to assess a specific application. For example, the applicant's fixed utility costs will generally not change with the commodity's market fluctuations, so we know that the applicant's costs to run the operation will not decrease at the same rate as its income from the commodity price decreases. Removing this unnecessary requirement also makes the application easier to complete, further improving the timeliness of the reduction process.

In the proposed rule, paragraph (g) in the previous rule became new paragraph (f). New § 3513.15(f) is revised in this final rule from the language initially proposed in response to comments received. The language in proposed § 3513.15(f) was not changed from language in previous paragraph (g), which required applicants to provide ''complete information'' about why they were unable to meet the terms and conditions of their leases. The commenters believe that this requirement is unnecessarily broad and recommended that the BLM require only ''the information sufficient to demonstrate'' the need for the reduction. The BLM agrees that the initially proposed text was unclear, and the final rule incorporates the suggested revisions. The language in the final rule more accurately describes how much information an applicant must include in its application. Similar to paragraph (g) of this section, this clarification will not result in any substantive impacts.

Section 3513.15(g) of the final rule contains the requirement found in § 3513.15(i) of the previous regulations. However, instead of requiring ''all facts'' showing why the lessee cannot successfully operate a mine, the final rule requires the application to provide ''justification'' showing why the lessee cannot successfully operate a mine under the existing royalty or rental. The final rule provides a more measured requirement for the applicant to demonstrate why it is unable to meet the terms of the lease. It is still imperative for the application to provide sufficient justification for the BLM to make its determination in each applicant's case. While this is a change to the wording of the regulation, the BLM does not expect any substantive impact from this revision because the applicant will still need to demonstrate why it cannot operate the lease under current conditions. Data that may be seen in these types of applications include: Geologic maps and reports about hazards being encountered, cost per ton of product, revenue per ton of product, or reports discussing any financial hardship that an individual mine is facing.

This final rule also removes paragraphs (j) and (k) of § 3513.15, which required full information as to whether the lessee pays royalties or payments out of production to anyone other than the United States, the amounts paid and efforts the lessee has made to reduce them, and documents demonstrating that the total amount of overriding royalties paid for the lease, discussed in 43 CFR 3504.26, will not exceed one-half the proposed reduced royalties due the United States. The BLM expects that the application would disclose any relevant information regarding overriding royalties under the informational requirements of § 3513.15(g) and (h) of the final rule because the BLM has authority to order the operator to suspend or reduce an overriding royalty as stated in 43 CFR 3504.26. The removal of paragraphs (j) and (k) makes the application easier to complete, improving the timeliness of the process.

Section 3513.15(h) of the final rule contains the requirement, set forth in § 3513.15(l) of the previous regulations, that the applicant include any additional information that the BLM requires to determine whether the applicant meets the standards of § 3513.12. Section 3513.12, which this rule does not amend, explains the criteria that the BLM considers when approving a waiver, suspension, or reduction in rental or minimum royalty, or a reduction in the royalty rate.

Section 3513.17 How will the BLM implement a reduction of rental, royalties, or minimum production?

This final rule adds a new § 3513.17, which explains how the BLM implements royalty rate reductions

Section 39 of the MLA, 30 U.S.C. 209, authorizes the Secretary to reduce royalty rates and rental fees when in his judgment it is necessary to do so to promote development, or when in his judgment the leases cannot be successfully operated under the terms provided therein. This provision of the MLA authorizes the Secretary to provide across-the-board royalty rate relief for all lessees who are developing non-energy minerals leased by the Federal Government, as long as the Secretary finds that it is necessary to do so in order to promote development. Promoting development will help ensure operations can continue, preserve jobs, and help ensure that domestic commodities from those operations remain available.

Section 3513.17 is outlined as follows:

Paragraph (a) of § 3513.17 implements section 39 of the MLA in the regulations, enabling the BLM to reduce rental fees, royalty rates, or minimum production requirements on its own initiative, whereas previously, the BLM could provide rate relief only upon application on a case-by-case basis. This new section allows the BLM, on behalf of the Secretary of the Interior, to provide such relief in order to promote

the overall development of a mineral resource for all leases in a geographic area or across an industry. This section more fully implements in 43 CFR part 3500 the broad authority that the MLA grants to the Secretary of the Interior for implementing these reductions in order to promote development, in addition to the reductions based on individual lease-by-lease applications.

Paragraph (b) of § 3513.17 explains that the BLM may implement a reduction in response to an application submitted under § 3513.15. This is not a change from existing practice, but it is included to demonstrate the difference between the application process of § 3513.15 and a BLM-initiated reduction under § 3513.17(a).

Paragraph (c) of § 3513.17 describes how the BLM will limit reductions implemented under § 3513.17. Section 3513.17(c) applies both to reductions that the BLM implements on its own initiative under § 3513.17(a) and to reductions that the BLM implements in response to an application under § 3513.17(b). Under paragraph (c) of this section, reductions are limited either by duration or by tonnage. That is, reductions either are limited in duration to not more than 10 years from the date on which BLM implements a reduction under either paragraph (a) or (b), or are limited to not more than a specific tonnage that the lessee produces, as determined by the BLM, under paragraph (b). The BLM determines the specific time or tonnage limit appropriate for each reduction on a case-by-case basis. The BLM will determine the duration of a reduction or a tonnage limit based on projected market conditions or geologic hazard attributes for each application, or for the subject area or industry. If a reduction is in response to an application under § 3513.17(b), the reason or reasons set forth in the application will help determine the appropriate term or tonnage limit of the reduction.

Prior to 1999, there was no requirement in the BLM's regulations that a reduction would be temporary, though in practice reductions generally have been temporary.[11] Placing timing or tonnage constraints on reductions in this final rule will ensure that any reductions that the BLM grants or initiates would be applied when necessary to promote development, but not longer than necessary. At the end of the reduction period, the royalty, rental, or minimum production requirements will increase to their original rates. At that time, the lessee would operate under the original lease terms.

The BLM anticipates setting a time limit (rather than a maximum production volume) when issuing an area- or industry-wide reduction to promote development. The final rule limits the reduction to not more than 10 years, but the BLM may determine that a shorter period is appropriate. Market conditions can fluctuate over a 10-year period, and a longer period in a single grant may not be appropriate. Past legislation for reductions expired after 5 years, so a 10-year term was chosen as a maximum, with the option to make the term shorter, if appropriate.

When a lessee submits an application under § 3513.15, in certain circumstances, such as areas with geologic hazards, it might be more appropriate to apply a fixed tonnage limit rather than applying a time limit. Qualified BLM personnel would then calculate a fixed tonnage using known, estimated, or historic production determined by current mining style, rock type, and operator production capabilities or volume required to overcome a geologic hazard.

Under the existing regulations, the BLM has often used a fixed tonnage when applying a constraint to the royalty rate reduction for a lease. The tonnage constraint ensures that the lessee produces the amount of a mineral projected over a particular period, but prevents the lessee from refocusing production exclusively to an area with a reduced royalty rate and producing a greater amount of the mineral at the reduced royalty rate.

While there is no specific process in the regulations for an extension of these constraints, the final rule does not limit the number of times that lessees may apply for a reduction under § 3513.15.

III. Procedural Matters

Regulatory Planning and Review (Executive Orders 12866 and 13563)

Executive Order (E.O.) 12866 provides that the Office of Information and Regulatory Affairs in the Office of Management and Budget will review all significant rules. The Office of Information and Regulatory Affairs has determined that this rule is significant because it may raise novel legal or policy issues.

E.O. 13563 reaffirms the principles of E.O. 12866 while calling for improvements in the nation's regulatory system to promote predictability, reduce uncertainty, and use the best, most innovative, and least burdensome tools for achieving regulatory ends. The E.O. directs agencies to consider regulatory approaches that reduce burdens and maintain flexibility and freedom of choice for the public where these approaches are relevant, feasible, and consistent with regulatory objectives. E.O. 13563 emphasizes further that regulations must be based on the best available science and that the rulemaking process must allow for public participation and an open exchange of ideas. We have developed this rule in a manner consistent with these requirements.

The final rule will reduce duplicative information requirements for non-energy solid leasable minerals operators who apply for a reduction of rental, royalties or minimum production. The final rule will also more fully implement the Secretary's authority under section 39 of the MLA, 30 U.S.C. 209, to provide these reductions to promote development.

The BLM reviewed the requirements of the final rule and determined that it would not adversely affect in a material way the economy, a sector of the economy, productivity, competition, jobs, the environment, public health or safety, or State, local, or tribal governments or communities. For more detailed information, see the Regulatory Impact Analysis (RIA) prepared for this rule. The RIA has been posted in the docket for the rule on the Federal eRulemaking Portal: *https://www.regulations.gov.* In the Searchbox, enter ''RIN 1004–AE58'', click the ''Search'' button, open the Docket Folder, and look under Supporting Documents.

Reducing Regulation and Controlling Regulatory Costs (E.O. 13771)

This final rule is an E.O. 13771 deregulatory action. As discussed in section 1 and detailed in section 3 of the RIA, the estimated cost of the final rule is negative (a net benefit) in that it could produce a benefit to society from greater overall non-energy solid leasable (NESL) minerals economic activity. This leads to the final rule having an annual net benefit of between $0 and $*1.62 million* in 2018 dollars ($1.45 *million* in 2016 dollars) per affected industry depending on the resource that could be counted under Executive Order 13771, section 2(c), as offsetting costs from any new regulation that the Department of the Interior may propose.

The BLM does not expect a change of Federal revenues from promulgation of this rule, as it does not directly affect royalty rates. If the BLM were to reduce royalty rates subsequent to this rulemaking, there may be a decrease in federal revenues collected in order to ensure the greatest ultimate recovery.

[11] *See* 43 CFR 3503.2–4 (1998).

This, however, would depend on the specific parameters of the royalty adjustments and the market environment at the time of action, as a royalty rate reduction may allow operations and royalty revenue to continue from operations that may otherwise have ceased if they did not receive a royalty reduction.

Administrative PAYGO (E.O. 13893)

E.O. 13893, ''Increasing Government Accountability for Administrative Actions by Reinvigorating Administrative PAYGO'' (Oct. 10, 2019), requires agencies to ''include one or more proposals for reducing mandatory spending whenever an agency proposes to undertake a discretionary administrative action that would increase mandatory spending. section 3 of E.O. 13893 defines ''discretionary administrative action'' in part as an administrative action that is not required by statute and would impact mandatory spending. This rulemaking adopts regulatory language to more closely align with the broad statutory authority, including at 30 U.S.C. 290.

For the purpose of examining the rule under E.O. 12866, the BLM analyzed what the potential impacts would be if the royalty rates for these commodities were reduced, including reduced contributions to the U.S. Treasury. The scenarios examined are hypothetical and would not take effect with the issuance of this rule. Because this rule does not directly affect royalty rates, the BLM cannot at this time assess the impact of specific royalty rate adjustments that may be implemented at a future date. The statute allows the Secretary to make a decision in order to ensure the greatest ultimate recovery of the resource. While we estimate that the potential royalty rate reductions could reduce contributions to the U.S. Treasury, there may be instances where royalty reductions could incentivize mining to continue for a longer duration on public lands, versus closure of operations, and therefore could ensure royalty payments at a reduced rate for a longer time horizon. The Mineral Leasing Act envisions a fluctuating minerals market in which the Secretary may need to waive, suspend, or reduce royalty rates in order to ensure the greatest ultimate recovery of the resource. This rulemaking takes into account the markets for a given mineral at a certain snapshot in time.

Regulatory Flexibility Act

This rule will not have a significant economic effect on a substantial number of small entities under the Regulatory Flexibility Act (5 U.S.C. 601 *et seq.*). The Regulatory Flexibility Act (5 U.S.C. 601 *et seq.*) (RFA) generally requires that Federal agencies prepare a regulatory flexibility analysis for rules subject to the notice-and-comment rulemaking requirements under the Administrative Procedure Act (5 U.S.C. 500 *et seq.*), if the rule would have a significant economic impact, whether detrimental or beneficial, on a substantial number of small entities. *See* 5 U.S.C. 601–612. Congress enacted the RFA to ensure that government regulations do not unnecessarily or disproportionately burden small entities. Small entities include small businesses, small governmental jurisdictions, and small not-for-profit enterprises.

The BLM examined current BLM lessors for soda ash and potash and found that 0 of 5 soda ash lessors, 1 of 3 potash lessors, and 1 of 1 gilsonite lessors are entities that constitute a small business. While this could be considered a substantial number of small businesses in the context of entities affected by this rule, the final rule does not directly have a significant economic impact.

The final rule's only direct economic impact is the reduced information collection requirements for an application, which lessens the burden on the company when applying for a royalty rate reduction. We have calculated this to be an average saving of $680 a year. The rest of this rule gives the BLM tools to potentially reduce royalty rates in the future but does not currently affect industry. The BLM will consider the economic impacts on affected entities when issuing reductions under this final rule.

For the purpose of carrying out its review pursuant to the RFA, the head of the BLM certifies that this final rule will not have a ''significant economic impact on a substantial number of small entities.''. The agency certifies this on the basis that the final rule does not have a significant economic impact. A final regulatory flexibility analysis is therefore not required. For a more detailed discussion see the section 2.8 of the RIA.

Small Business Regulatory Enforcement Fairness Act (SBREFA)

This rule is not a major rule under the Small Business Regulatory Enforcement Fairness Act, 5 U.S.C. 804(2). This rule:

(a) Does not have an annual effect on the economy of $100 million or more. The BLM estimates that the rule would provide an annual benefit of $619,000 to the economy. Please see the RIA for this rule for a more detailed discussion.

(b) Will not cause a major increase in costs or prices for consumers, individual industries, Federal, State, or local government agencies, or geographic regions. The rule is designed to lessen the burden on industry, when necessary, while still providing revenue to the government. This revenue is based on commodity price, adjusted royalty rate, and production amounts.

(c) Does not have significant adverse effects on competition, employment, investment, productivity, innovation, or the ability of U.S.-based enterprises to compete with foreign-based enterprises. This rule may foster positive effects in each of these areas. This rule would improve the BLM's ability to provide relief to the affected industry.

Unfunded Mandates Reform Act

This rule does not impose an unfunded mandate on State, local, tribal governments, or the private sector of more than $100 million per year. The rule does not have a significant or unique effect on State, local, tribal governments or the private sector. This rule would affect only the BLM's process for providing reductions to rental, royalties or minimum production requirements of Federal leases. A statement containing the information required by the Unfunded Mandates Reform Act (2 U.S.C. 1531 *et seq.*) is not required.

Takings (E.O. 12630)

This rule does not affect a taking of private property or otherwise have taking implications under E.O. 12630. Section 2(a) of E.O. 12630 identifies policies that do not have takings implications, such as those that abolish regulations, discontinue governmental programs, or modify regulations in a manner that lessens interference with the use of private property. The rule is a deregulatory action and does not interfere with private property. A takings implication assessment is not required.

Federalism (E.O. 13132)

Under the criteria in section 1 of E.O. 13132, this rule does not have sufficient federalism implications to warrant the preparation of a federalism summary impact statement. It does not have substantial direct effects on the States, on the relationship between the national government and the States, or on the distribution of power and responsibilities among the various levels of government. The rule would reduce burdens on industry and more closely align BLM regulations with the relevant statute. A federalism summary impact statement is not required.

Civil Justice Reform (E.O. 12988)

This rule complies with the requirements of E.O. 12988. Specifically, this rule:

(a) Meets the criteria of section 3(a) requiring that all regulations be reviewed to eliminate errors and ambiguity and be written to minimize litigation; and

(b) Meets the criteria of section 3(b)(2) requiring that all regulations be written in clear language and contain clear legal standards.

Consultation With Indian Tribes (E.O. 13175 and Departmental Policy)

The Department of the Interior strives to strengthen its government-to-government relationship with Indian tribes through a commitment to consultation with Indian tribes and recognition of their right to self-governance and tribal sovereignty. We have evaluated this rule under the Department's consultation policy and under the criteria in E.O. 13175 and have determined that it has no substantial direct effects on federally recognized Indian tribes and that consultation under the Department's tribal consultation policy is not required. The rule would apply to non-energy mineral leases on the Uintah and Ouray Indian Reservation, Hillcreek Extension, State of Utah (43 CFR 3503.11(b)), but no active leases have been present on those lands for approximately 15 years. There are no plans to grant new leases to any entity at this time, nor is there any entity interested in pursuing leases on those lands. This is a procedural rule that does not change any royalty rates. If the BLM considers implementing an area- or industry-wide reduction under this rule that may have impacts on a tribe or tribes, the BLM would initiate tribal consultation, as appropriate, at that time.

Paperwork Reduction Act (44 U.S.C. 3501 et seq.)

This final rule contains a collection of information that the BLM has submitted to the Office of Management and Budget (OMB) for review and approval under the Paperwork Reduction Act of 1995 (44 U.S.C. 3501 *et seq.*). We may not conduct or sponsor and you are not required to respond to a collection of information unless it displays a currently valid OMB control number. Collections of information include requests and requirements that an individual, partnership, or corporation obtain information, and report it to a Federal agency (44 U.S.C. 3502; 5 CFR 1320.3(c) and (k)). The OMB has reviewed and approved the information collection requirements in this rule and assigned OMB Control Number 1004–0121, which expires October 31, 2022.

The proposed rule, soliciting comments on the collections of information for 60 days, was published in the **Federal Register** on October 18, 2019 (84 FR 55873). No comments were received related to the information collection activities.

This final rule retains most of the text of the existing regulations while making only a small number of changes. The BLM has determined that the changes in the final rule are necessary to update the process for lessees to seek and for the BLM to grant reductions of rental fees, royalty rates, and/or minimum production requirements associated with all non-energy solid leasable mineral under 43 CFR part 3500.

At present, 32 information collection activities are authorized under control number 1004–0121. This information collection request pertains to this final rule in which the BLM will revise control number 1004–0121 by dividing one previously approved information collection activity, Application for Waiver, Suspension, or Reduction of Rental or Minimum Royalties, or for a Reduction in the Royalty Rate, into two activities. One activity will be limited to applications for suspension of operations, and the other activity will include applications for reductions of rental, royalties, and minimum production. The net result of this revision will be that control number 1004–0121 will include 33 information collection activities.

In addition, the BLM is reducing the hours for the application for reduction of rental, royalties, or minimum production (43 CFR 3513.15 and 3513.16). The result will be a 10-hour reduction of estimated industry staff time, from 100 hours to 90 hours per application, of information that industry has to collect at present to submit an application.

The net reduction of 10 burden hours per year will be a result of revisions of 43 CFR 3513.15 that will simplify applications for reduction of rental, royalties, or minimum production requirements. These revisions will:

- Remove current § 3513.15(f), which at present requires a tabulated statement of the leasable minerals mined for each month covering at least the last twelve months before the filing of the application, and the average production mined per day for each month;
- Move current paragraph (g) to new paragraph (f), but make no other changes to that paragraph, which requires that an application for relief from the minimum production include complete information why minimum production was not attained;
- Remove paragraph (h), which currently requires a detailed statement of expenses and costs of operating the entire lease, and the income from the sale of any leased products;
- Revise current paragraph (i) by requiring ''justification'' rather than ''all facts'' showing why the operator cannot successfully operate the mines under the royalty or rental fixed in the lease and other lease terms;
- Move current paragraph (i) to new paragraph (g);
- Remove current paragraph (j), which at present requires that an application for reduction of royalty must include full information about any royalties the lessee pays to anyone other than the United States and a description of the efforts the lessee has made to reduce the other royalties;
- Remove current paragraph (k), which requires documents demonstrating that the total amount of overriding royalties the lessee will pay will not exceed one-half the proposed reduced royalties due the United States;
- Revise current paragraph (l) to require ''any other information BLM needs to determine whether the request satisfies the standards in [43 CFR] 3504.25 or [43 CFR] 3513.12.'';
- Move current paragraph (l) to new paragraph (h).

Abstract: The BLM requests OMB to approve the revision of control number 1004–0121 in light of a final rule, which is intended to streamline applications for various forms of relief, including royalty rate reductions. Information Collection burdens associated with 43 CFR 3500 are approved under OMB Control Number 1004–0121 (27,306 annual burden hours, 507 annual responses, and $2,050,695 non-hour costs; expires October 31, 2022). This rule reduces annual burden hours by 10 hours. There are no changes to number of response or non-hour cost burdens.

Title of Collection: Leasing of Solid Minerals Other Than Coal and Oil Shale.

OMB Control Number: 1004–0121.

Form:

- Form 3504–1, Personal Bond and Power of Attorney under Mineral Lease or Prospecting Permit for Mining Deposits;
- Form 3504–3, Bond Under Lease for Mining Deposits;
- Form 3504–4, Statewide or Nationwide Personal Mineral Bond for Prospecting Permits and Leases—Coal, Sodium, Phosphate, Potassium, Sulphur, and Other Mineral Deposit;

• Form 3510–1, Prospecting Application and Permit;

• Form 3510–2, Phosphate or Sodium Use Permit; and

• Form 3520–7, _____Lease.

Type of Review: Revision of a currently approved information collection.

Description of Respondents: Holders of Federal leases of solid minerals other than coal and oil shale.

Respondents' Obligation: Required to obtain or retain a benefit.

Frequency of Collection: On occasion.

Estimated Number of Annual Responses: 507.

Estimated Total Annual Burden Hours: 27,296.

Estimated Total Annual Non-Hour Cost: $2,050,695.

As part of our continuing effort to reduce paperwork and respondent burdens, we invite the public and other Federal agencies to comment on any aspect of this information collection, including:

(1) Whether or not the collection of information is necessary for the proper performance of the functions of the agency, including whether or not the information will have practical utility;

(2) The accuracy of our estimate of the burden for this collection of information, including the validity of the methodology and assumptions used;

(3) Ways to enhance the quality, utility, and clarity of the information to be collected; and

(4) Ways to minimize the burden of the collection of information on those who are to respond, including through the use of appropriate automated, electronic, mechanical, or other technological collection techniques or other forms of information technology, *e.g.,* permitting electronic submission of response.

If you wish to comment on the information collection activities, you may send your comments and suggestions on this information collection to the Desk Officer for the Department of the Interior at OMB–OIRA. To see a copy of the information collection request submitted to OMB, go to *http://www.reginfo.gov* (select Information Collection Review, Currently Under Review); or you may obtain a copy of the supporting statement for the collection of information by contacting the Bureau's Information Collection Clearance Officer. Send your comments and suggestions on this information collection to the Desk Officer for the Department of the Interior at OMB–OIRA at (202) 395–5806 (fax) or *OIRA_Submission@omb.eop.gov* (email). Please provide a copy of your comments to Faith Bremner, Senior Regulatory Analyst, Bureau of Land Management, 20 M Street SE, Room 2134 LM, Washington, DC 20003; or by email to *fbremner@blm.gov.* Please reference OMB Control Number 1004–0121 in the subject line of your comments.''

National Environmental Policy Act

The BLM has determined that the changes made by this final rule are administrative or procedural in nature in accordance with 43 CFR 46.210(i) (''Policies, directives, regulations, and guidelines: that are of an administrative, financial, legal, technical, or procedural nature; or whose environmental effects are too broad, speculative, or conjectural to lend themselves to meaningful analysis and will later be subject to the NEPA process, either collectively or case-by-case''). Further, the final rule does not involve any of the extraordinary circumstances listed in 43 CFR 46.215 that would require further analysis under NEPA. Therefore, this action is categorically excluded from environmental review under the National Environmental Policy Act (NEPA).

Effects on the Energy Supply (E.O. 13211)

This rule is not a significant energy action under the definition in E.O. 13211. This rule would amend only BLM regulations that could impact non-energy solid leasable minerals. A Statement of Energy Effects is not required.

Author

The principal authors of this rule are: Lindsey Curnutt, Division of Solid Minerals; Charles Yudson, Division of Regulatory Affairs; assisted by the Office of the Solicitor.

Katharine Sinclair MacGregor,

Deputy Secretary, U.S. Department of the Interior.

List of Subjects in 43 CFR Part 3500

Government contracts, Hydrocarbons, Mineral royalties, Mines, Phosphate, Potassium, Public lands-mineral resources, Reporting and recordkeeping requirements, Sodium, Sulphur, Surety bonds.

For the reasons set out in the preamble, the Bureau of Land Management amends 43 CFR part 3500 as follows:

PART 3500—LEASING OF SOLID MINERALS OTHER THAN COAL AND OIL SHALE

■ 1. Revise the authority citation for part 3500 to read as follows:

Authority: 5 U.S.C. 552; 30 U.S.C. 189, 192c, and 209; 43 U.S.C. 1701 *et seq.;* and sec. 402, Reorganization Plan No. 3 of 1946 (5 U.S.C. appendix).

■ 2. Revise § 3513.11 to read as follows:

§ 3513.11 May BLM relieve me of the lease requirements of rental, minimum royalty, or production royalty while continuing to hold the lease?

Yes. The BLM has a process that may allow you temporary relief from these lease requirements in accordance with 30 U.S.C. 209.

■ 3. Revise § 3513.15 to read as follows:

§ 3513.15 How do I apply for reduction of rental, royalties, or minimum production?

You must submit your application with the following information for all leases involved:

(a) The serial numbers;

(b) The name of the record title holder(s);

(c) The name of the operator and operating rights owners if different from the record title holder(s);

(d) A description of the lands by legal subdivision, if the application is for a portion of the lease;

(e) A map showing the serial number and location of each mine or excavation and the extent of the mining operations;

(f) If you are applying for relief from the minimum production requirement, the information sufficient to demonstrate why you did not attain the minimum production;

(g) Justification showing why you cannot successfully operate the mines under the royalty or rental fixed in the lease and other lease terms;

(h) Any other information that BLM needs to determine whether the request satisfies the standards in § 3513.12.

■ 4. Add § 3513.17 to read as follows:

§ 3513.17 How will BLM implement a reduction of rental, royalties, or minimum production?

(a) The BLM may reduce rental, royalties, or minimum production on its own initiative if the BLM determines, based on available information, that it is necessary to promote development of the mineral resource. Such a reduction may be for a specific geographic area, or on an industry-wide basis.

(b) The BLM may reduce rental, royalties, or minimum production in response to an application submitted under § 3513.15 if the application meets the criteria in § 3513.12.

(c) The BLM may grant a reduction not to exceed:

(1) 10 years from the date of implementation under paragraph (a) of this section, or

(2) 10 years from the date of the decision to approve the application

submitted under paragraph (b) of this section, or for a maximum quantity of mineral production as determined by the BLM.

[FR Doc. 2020–23003 Filed 10–23–20; 8:45 am]

BILLING CODE 4310–84–P

DEPARTMENT OF HOMELAND SECURITY

Transportation Security Administration

49 CFR Part 1570

[Docket No. TSA–2015–0001]

RIN 1652–AA55

Security Training for Surface Transportation Employees; Compliance Dates; Amendment

AGENCY: Transportation Security Administration, DHS.

ACTION: Final rule.

SUMMARY: This final rule amends the ''Security Training for Surface Transportation Employees'' (Security Training) final rule (published March 23, 2020, and amended May 1, 2020) to extend the compliance dates by which certain requirements must be completed. TSA is aware that many owner/operators within the scope of this rule's applicability may be unable to meet the compliance deadline for submission of the required security training programs to TSA for approval because of the impact of COVID–19 as well as actions taken at various levels of government to address this public health crisis. In response, TSA is extending the compliance deadline for submission of the required security training program to no later than March 22, 2021. Should TSA determine that an additional extension of time is necessary based upon the impact of the COVID–19 public health crisis, TSA will publish a document in the **Federal Register** announcing an updated compliance date for this requirement.

DATES: *Effective Date:* This rule is effective October 26, 2020.

Compliance Dates: Compliance date for submission of security training program to TSA under § 1570.19(b)(1) and (2): March 22, 2021.

FOR FURTHER INFORMATION CONTACT: Harry Schultz (TSA; Policy, Plans, and Engagement, Surface Division) or David Kasminoff (TSA, Senior Counsel; Regulations and Security Standards; Office of Chief Counsel) by telephone at (571) 227–5563 or email to *SecurityTrainingPolicy@tsa.dhs.gov.*

SUPPLEMENTARY INFORMATION:

I. Background

TSA published the Security Training Final Rule on March 23, 2020.[1] This rule requires owner/operators of higher-risk freight railroad carriers, public transportation agencies (including rail mass transit and bus systems), passenger railroad carriers, and over-the-road bus companies, to provide TSA-approved security training to employees performing security-sensitive functions. As published on March 23, 2020, TSA scheduled the final rule to take effect on June 22, 2020, with the first compliance deadline set for July 22, 2020.[2] On May 1, 2020, TSA delayed the effective date of the final rule to September 21, 2020, in recognition of the potential impact of COVID–19 measures and related strain on resources for owner/operators required to comply with the regulation.[3] TSA revised all compliance dates within the rule to reflect the new effective date.[4]

II. Request for Delay

On August 10, 2020, several members of the Surface Transportation Security Advisory Committee (STSAC)[5] submitted a request to the TSA Administrator to further delay the effective date of the Security Training Final Rule.[6] In their letter, representatives from the three modes affected by this rulemaking argued that the effective date should be extended because they are unable to comply with the regulation's requirements due to the impact of the COVID–19 public health crisis as well as the need to prepare for, and address, the impact of contingencies such as the hurricane and tropical storm season.

They also indicated a need to focus on training to address these issues, such as employee responsibilities for personal medical screening, workplace hygiene, social distancing, and repeated cleanings daily of transportation vehicles and facilities used by co-workers, employees in other sectors, and the public generally. They indicated that the responsible leads and supporting staffs necessary to develop and implement a security training program that meets TSA's requirements are the same individuals who are currently focusing their efforts on assuring worker and public health and safety while sustaining operations throughout the continuing national public health emergency caused by COVID–19.''[7] The letter also argued that some of the activities in response to other issues and contingencies have a security benefit. For example, their actions to address safety and security during ongoing demonstrations have resulted in a positive security benefit.

III. Amending Compliance Date

TSA recognizes the impact of COVID–19 on our surface stakeholders and the need to provide some relief at a time when many owner/operators are simultaneously leveraging a range of resources to address multiple challenging circumstances, and struggling financially and limiting operations due to the effects of the COVID–19 public health crisis. After considering the current operational environment and the purpose of this regulation, TSA has decided to maintain the current effective date for the rule but to further extend the compliance deadline in § 1570.109(b) for security program submission to March 22, 2021. This extension would provide the industry with a total of 180 days of relief for submission of security training programs as compared to the original deadline of September 20, 2020, and extend the deadline for initial training of all employees in security-sensitive positions into the late spring and early summer of 2022.[8] TSA believes this

[1] 85 FR 16456.

[2] *See, e.g.,* 85 FR at 16469.

[3] 85 FR 25315.

[4] *See id.* for table of extended deadlines for compliance.

[5] The STSAC was established under the authority of Section 1969 of the TSA Modernization Act (Division K, Title I), of the FAA Reauthorization Act of 2018 (Pub. L. 115–254, 132 Stat. 3186, Oct. 5, 2018). Section 1969 amended Subtitle A of title IV of the Homeland Security Act of 2002 (6 U.S.C. 201 *et seq.*). The statute exempts the committee, and any subcommittees, from the Federal Advisory Committee Act (5 U.S.C. App.). The STSAC is chartered for the purpose of advising, consulting with, reporting to, and making recommendations to the TSA Administrator on surface transportation security matters, including the development, refinement, and implementation of policies, programs, initiatives, rulemakings, and security directives pertaining to surface transportation security. Additional information on the STSAC is available on TSA's website at: *https://www.tsa.gov/for-industry/surface-transportation-security.*

[6] *See* Docket No. TSA–2015–0001–0045 at *Regulations.gov* for Letter from Thomas Farmer of the Association of American Railroads; Polly Hanson of the American Public Transportation Association; Chief Ronald Pavlick of the Washington Metropolitan Area Transportation Authority; Colonel (Ret.) Michael Licata, Academy Bus; and J.R. Gelnar of the American Short Line and Regional Railroad Association (dated Aug. 10, 2020).

[7] *Id.*

[8] Under the rule, owner/operators have up to one year (12 months) after their security training program is approved by TSA to provide initial training to all of their security-sensitive employees. *See* § 1570.111. Once the proposed program is submitted to TSA, the agency has 60 days (2 months) to review and approve a security program, with the ability to extend the review period and/or require the owner/operator to modify the program, which would stay the 60-day period. Thus, from the date the program is submitted to

Continued

action addresses the most burdensome requirements in the rule, such as submitting security training programs to TSA for approval and training employees in security-sensitive positions, without delaying other key elements of the rule. Should TSA determine that an additional extension of time for submission of the security training program is necessary based upon the impact of the COVID–19 public health crisis, TSA will publish a document in the **Federal Register** announcing an updated compliance date for this requirement. TSA is not extending the deadlines for owner/operators to report to TSA whether they fall within the rule's applicability (§ 1570.105),[9] to identify a security coordinator (§ 1570.201), and to report security incidents to TSA (§ 1570.203).[10]

IV. Regulatory Analysis

A. Administrative Procedure Act

TSA takes this action without prior notice and public comment. Sections 553(b) and (d) of the Administrative Procedure Act (5 U.S.C. 553) authorize agencies to dispense with certain rulemaking procedures when they find good cause to do so. Under section 553(b), the requirements of notice and opportunity to comment do not apply when the agency for good cause finds that these procedures are ''impracticable, unnecessary, or contrary to the public interest.'' Section 553(d) allows an agency, upon finding good cause, to make a rule effective immediately, thereby avoiding the 30-day delayed effective date requirement in section 553.

This final rule recognizes the need to extend the compliance deadline for the requirement in the Security Training Final Rule that would be most difficult for owner/operators to implement during the current COVID–19 public health crisis and the significant disruption and uncertainty in both private and local government operations caused by this crisis. Specifically, TSA is extending the period during which owner/operators must develop a security training program for their employees and submit the program to TSA for approval. Delaying this requirement also effectively delays the deadline for training employees.

TSA has good cause to delay the compliance deadline for submission of security training programs without advance notice and comment or a delayed effective date.[11] To delay taking this action while waiting for public comment would be impracticable and contrary to the public interest. The owner/operators subject to the requirements of the final rule need immediate certainty regarding the deadlines of the final rule so that they may focus on other urgent issues affecting their operations.

B. Paperwork Reduction Act

The Paperwork Reduction Act of 1995 (PRA)[12] requires Federal agencies to consider the impact of paperwork and other information collection burdens imposed on the public and, under the provisions of PRA section 3507(d), obtain approval from the OMB for each collection of information. OMB has approved the collection of information for the Security Training Final Rule under OMB control number 1652–0066. While this rule delays the timing of submission, it does not modify the collection burdens that OMB has already approved.

C. Executive Orders 12866 and 13563 Assessment

Executive Orders 12866 (Regulatory Planning and Review) and 13563 (Improving Regulation and Regulatory Review) direct agencies to assess the costs and benefits of available regulatory alternatives and, if regulation is necessary, to select regulatory approaches that maximize net benefits (including potential economic, environmental, public health and safety effects, distributive impacts, and equity). Executive Order 13563 emphasizes the importance of quantifying costs and benefits, reducing costs, harmonizing rules, and promoting flexibility.

Executive Order 12866 defines ''significant regulatory action'' as one that is likely to result in a rule that may (1) have an annual effect on the economy of $100 million or more or adversely affect in a material way the economy, a sector of the economy, productivity, competition, jobs, the environment, public health or safety, or state, local, or Tribal governments or communities; (2) create a serious inconsistency or otherwise interfere with an action taken or planned by another agency; (3) materially alter the budgetary impact of entitlements, grants, user fees, or loan programs or the rights or obligations of recipients thereof; or (4) raise novel legal or policy issues arising out of legal mandates, the President's priorities, or the principles set forth in the Executive Order. The Office of Management and Budget (OMB) has not designated this rule a ''significant regulatory action,'' under Executive Order 12866. Accordingly, OMB has not reviewed it.

D. Regulatory Flexibility Act Assessment

The Regulatory Flexibility Act of 1980, 5 U.S.C. 601–612, as amended by the Small Business Regulatory Enforcement Fairness Act of 1996 (Pub. L. 104–121), requires Federal agencies to consider the potential impact of regulations on small businesses, small government jurisdictions, and small organizations during the development of their rules. This final rule, however, makes changes for which notice and comment are not necessary. Accordingly, DHS is not required to prepare a regulatory flexibility analysis.[13]

E. Executive Order 13132 (Federalism)

A rule has federalism implications under E.O. 13132, if it has a substantial direct effect on State governments, on the relationship between the national government and the States, or on the distribution of power and responsibilities among the various levels of government. DHS has analyzed this rule under E.O. 13132 and determined that although this rule affects the States, it does not impose substantial direct compliance costs or preempt State law.[14] The rule relieves burdens on States.

F. Unfunded Mandates Assessment

The Unfunded Mandates Reform Act of 1995 (UMRA) requires Federal agencies to assess the effects of their regulatory actions. In particular, the UMRA addresses actions that may result in the expenditure by a State, local, or Tribal government, in the aggregate, or by the private sector of $100 million (adjusted for inflation) or more in any

TSA, owner/operators will have at least 14 months to train their employees.

[9] The rule sets the criteria for applicability, but requires owner/operators to determine if the criteria applies to their operations. For new and modified operations, owner/operators are required to notify TSA within 90 days before commencing their operations. *See* § 1570.105(b). This provision is intended to cover situations where a route is changed or cargo transported is modified in such a way as to trigger applicability. It also applies, however, to the current situation where an owner/operator may have cut routes or closed their business completely due to COVID–19. As the economy recovers and operations resume, owner/operators will be required to notify TSA in advance of commencing operations that would trigger applicability of the rule's requirements.

[10] The last two requirements are an extension of current requirements applicable to railroads and rail transit systems (under 49 CFR part 1580 as promulgated in 2008) to higher-risk bus transit systems and OTRBs.

[11] *See* 5 U.S.C. 553(b)(B), (d).

[12] *See* 44 U.S.C. 3501 *et seq.*

[13] See 5 U.S.C. 603, 604.

[14] See E.O. 13132, sec. 6.

one year. This final rule will not result in such an expenditure.

G. Environment

TSA has reviewed this rulemaking for purposes of the National Environmental Policy Act of 1969 (NEPA) (42 U.S.C. 4321–4347) and has determined that this action will not have a significant effect on the human environment. This action is covered by categorical exclusion (CATEX) number A3(e) in DHS Management Directive 023–01 (formerly Management Directive 5100.1), Environmental Planning Program, which guides TSA compliance with NEPA.

List of Subjects in 49 CFR Part 1570

Commuter bus systems, Crime, Fraud, Hazardous materials transportation, Motor carriers, Over-the-Road bus safety, Over-the-Road buses, Public transportation, Public transportation safety, Rail hazardous materials receivers, Rail hazardous materials shippers, Rail transit systems, Railroad carriers, Railroad safety, Railroads, Reporting and recordkeeping requirements, Security measures, Transportation facility, Transportation Security-Sensitive Materials.

The Amendments

For the reasons stated in the preamble, the Transportation Security Administration amends 49 CFR part 1570 as follows:

■ 1. The authority citation for part 1570 continues to read as follows:

Authority: 18 U.S.C. 842, 845; 46 U.S.C. 70105; 49 U.S.C. 114, 5103a, 40113, and 46105; Pub. L. 108–90 (117 Stat. 1156, Oct. 1, 2003), sec. 520 (6 U.S.C. 469), as amended by Pub. L. 110–329 (122 Stat. 3689, Sept. 30, 2008) sec. 543 (6 U.S.C. 469); Pub. L. 110–53 (121 Stat. 266, Aug. 3, 2007) secs. 1402 (6 U.S.C. 1131), 1405 (6 U.S.C. 1134), 1408 (6 U.S.C. 1137), 1413 (6 U.S.C. 1142), 1414 (6 U.S.C. 1143), 1501 (6 U.S.C. 1151), 1512 (6 U.S.C. 1162), 1517 (6 U.S.C. 1167), 1522 (6 U.S.C. 1170), 1531 (6 U.S.C. 1181), and 1534 (6 U.S.C. 1184).

■ 2. Amend § 1570.109 by revising paragraphs (b)(1) and (2) to read as follows:

§ 1570.109 Submission and approval.

* * * * *

(b) * * *

(1) Submit its program to TSA for approval no later than March 22, 2021.

(2) If commencing or modifying operations so as to be subject to the requirements of subpart B to 49 CFR parts 1580, 1582, or 1584 after March 22, 2021, submit a training program to TSA no later than 90 calendar days before commencing new or modified operations.

* * * * *

David P. Pekoske,

Administrator.

[FR Doc. 2020–23064 Filed 10–21–20; 4:15 pm]

BILLING CODE 9110–05–P

DEPARTMENT OF COMMERCE

National Oceanic and Atmospheric Administration

50 CFR Part 648

[Docket No. 200623–0167; RTID 0648–XA576]

Fisheries of the Northeastern United States; Atlantic Bluefish Fishery; Quota Transfer From VA to NC

AGENCY: National Marine Fisheries Service (NMFS), National Oceanic and Atmospheric Administration (NOAA), Commerce.

ACTION: Notification; quota transfer.

SUMMARY: NMFS announces that the Commonwealth of Virginia is transferring a portion of its 2020 commercial bluefish quota to the State of North Carolina. This quota adjustment is necessary to comply with the Atlantic Bluefish Fishery Management Plan quota transfer provisions. This announcement informs the public of the revised commercial bluefish quotas for Virginia and North Carolina.

DATES: Effective October 22, 2020 through December 31, 2020.

FOR FURTHER INFORMATION CONTACT: Laura Hansen, Fishery Management Specialist, (978) 281–9225.

SUPPLEMENTARY INFORMATION: Regulations governing the Atlantic bluefish fishery are found in 50 CFR 648.160 through 648.167. These regulations require annual specification of a commercial quota that is apportioned among the coastal states from Maine through Florida. The process to set the annual commercial quota and the percent allocated to each state is described in § 648.162, and the final 2020 allocations were published on June 29, 2020 (85 FR 38794).

The final rule implementing Amendment 1 to the Bluefish Fishery Management Plan (FMP) published in the **Federal Register** on July 26, 2000 (65 FR 45844), and provided a mechanism for transferring bluefish quota from one state to another. Two or more states, under mutual agreement and with the concurrence of the NMFS Greater Atlantic Regional Administrator, can request approval to transfer or combine bluefish commercial quota under § 648.162(e)(1)(i) through (iii). The Regional Administrator must approve any such transfer based on the criteria in § 648.162(e). In evaluating requests to transfer a quota or combine quotas, the Regional Administrator shall consider whether: The transfer or combinations would preclude the overall annual quota from being fully harvested; the transfer addresses an unforeseen variation or contingency in the fishery; and the transfer is consistent with the objectives of the FMP and the Magnuson-Stevens Act.

Virginia is transferring 25,000 lb (11,340 kg) of bluefish commercial quota to North Carolina through mutual agreement of the states. This transfer was requested to ensure that North Carolina would not exceed its 2020 state quota. The revised bluefish quotas for 2020 are: Virginia, 253,682 lb (115,068 kg) and North Carolina, 971,058 lb (440,464 kg).

Classification

NMFS issues this action pursuant to section 305(d) of the Magnuson-Stevens Act. This action is required by 50 CFR 648.162(e)(1)(i) through (iii), which was issued pursuant to section 304(b), and is exempted from review under Executive Order 12866.

Authority: 16 U.S.C. 1801 *et seq.*

Dated: October 22, 2020.

Jennifer M. Wallace,

Acting Director, Office of Sustainable Fisheries, National Marine Fisheries Service.

[FR Doc. 2020–23759 Filed 10–22–20; 4:15 pm]

BILLING CODE 3510–22–P

Proposed Rules

Federal Register
Vol. 85, No. 207
Monday, October 26, 2020

This section of the FEDERAL REGISTER contains notices to the public of the proposed issuance of rules and regulations. The purpose of these notices is to give interested persons an opportunity to participate in the rule making prior to the adoption of the final rules.

FEDERAL DEPOSIT INSURANCE CORPORATION

12 CFR Parts 362 and 390

RIN 3064–AF37

Removal of Transferred OTS Regulations Regarding Certain Subordinate Organizations of State Savings Associations

AGENCY: Federal Deposit Insurance Corporation.

ACTION: Notice of proposed rulemaking with request for public comment.

SUMMARY: In order to streamline Federal Deposit Insurance Corporation (FDIC) regulations, the FDIC proposes to rescind and remove from the Code of Federal Regulations (CFR) regulations entitled *Subordinate Organizations* that were transferred to the FDIC from the Office of Thrift Supervision (OTS) on July 21, 2011, in connection with the implementation of Title III of the Dodd-Frank Wall Street Reform and Consumer Protection Act (Dodd-Frank Act). The proposed rule would rescind and remove the transferred regulations because the FDIC has determined that the requirements for State savings association subordinate organizations included therein are substantially similar to the requirements for State savings associations and their subsidiaries set forth by certain sections of the Federal Deposit Insurance Act (FDI Act) and its implementing regulations. Therefore, the FDIC is proposing to remove the transferred regulations and proposes to use certain substantially similar FDIC regulations, as applicable, to achieve substantially similar supervisory results for State savings associations and their subsidiaries as could be obtained through the application of the transferred regulations.

DATES: Comments must be received on or before November 25, 2020.

ADDRESSES: You may submit comments by any of the following methods:

- *Agency website: https://www.fdic.gov/regulations/laws/federal/.* Follow instructions for submitting comments on the agency website.
- *FDIC Email: Comments@fdic.gov.* Include RIN 3064–AF37 on the subject line of the message.
- *Mail:* Robert E. Feldman, Executive Secretary, Attention: Comments/RIN 3064–AF37, Federal Deposit Insurance Corporation, 550 17th Street NW, Washington, DC 20429.
- *Hand Delivery/Courier:* Comments may be hand-delivered to the guard station at the rear of the 550 17th Street NW building (located on F Street) on business days between 7 a.m. and 5 p.m.
- *Federal eRulemaking Portal: http://www.regulations.gov.* Follow the instructions for submitting comments.

Public Inspection: All comments received will be posted without change to *https://www.fdic.gov/regulations/laws/federal/,* including any personal information provided. Paper copies of public comments may be ordered from the FDIC Public Information Center, 3501 North Fairfax Drive, Room E–1002.

Please include your name, affiliation, address, email address, and telephone number(s) in your comment. All statements received, including attachments and other supporting materials, are part of the public record and are subject to public disclosure. You should submit only information that you wish to make publicly available.

Please note: All comments received will be posted generally without change to *https://www.fdic.gov/regulations/laws/federal/,* including any personal information provided.

FOR FURTHER INFORMATION CONTACT: Donald Hamm, Special Advisor, (202) 898–3528, *dhamm@fdic.gov;* or Shelli Coffey, Review Examiner, (312) 382–7539, *scoffey@fdic.gov,* Risk Management and Applications, Division of Risk Management Supervision; Suzanne Dawley, Counsel, *sudawley@fdic.gov; or* Karlyn J. Hunter, Counsel, *khunter@fdic.gov,* Legal Division.

SUPPLEMENTARY INFORMATION:

I. Policy Objective

The policy objective of the proposed rule is to simplify the FDIC's regulations by removing unnecessary regulations and realigning existing regulations in order to improve the public's understanding of the rules and to improve the ease of the public's reference to them. Thus, as further detailed in this section, the FDIC proposes to rescind and remove from the CFR part 390, subpart O.[1] Pursuant to subpart O, the FDIC may, at any time, limit a State savings association's investment in their subordinate organizations, or may limit or refuse to permit any activities of any of these entities for supervisory, legal, or safety and soundness reasons.[2]

Subpart O includes definitions related to State savings association subsidiaries,[3] a requirement for the parent State savings association and its subsidiaries to maintain separate corporate identities,[4] a prior notice requirement for a State saving association seeking to establish or acquire a new subsidiary or engage in new activities through an existing subsidiary,[5] requirements related to the issuance of securities by a subsidiary,[6] and requirements for the exercise of salvage power by a State savings association.[7]

The FDIC has determined that the requirements for State savings association subordinate organizations set forth in subpart O are substantially similar to requirements of section 28 and its implementing regulations, subpart C and subpart D of part 362 of the FDIC's Rules and Regulations, and section 37 of the FDI Act.[8] Therefore, the FDIC is proposing to remove subpart O and proposes to use part 362, subpart C and subpart D, as applicable, to achieve substantially similar supervisory results for State savings associations and subsidiaries as could be obtained through the application of subpart O.

II. Background

A. The Dodd-Frank Act

The Dodd-Frank Act, signed into law on July 21, 2010, provided for a substantial reorganization of the regulation of State and Federal savings associations and their holding

[1] 12 CFR part 390, subpart O.
[2] 12 CFR part 390.250.
[3] 12 CFR 390.251.
[4] 12 CFR 390.252.
[5] 12 CFR 390.253.
[6] 12 CFR 390.254.
[7] 12 CFR 390.255.
[8] 12 U.S.C. 1831e(a); 12 CFR part 362, subparts C and D; 12 U.S.C. 1831n(a).

companies.[9] Beginning July 21, 2011, the transfer date established by section 311 of the Dodd-Frank Act,[10] the powers, duties, and functions formerly performed by the OTS were divided among the FDIC, as to State savings associations, the Office of the Comptroller of the Currency (OCC), as to Federal savings associations, and the Board of Governors of the Federal Reserve System (FRB), as to savings and loan holding companies. Section 316(b) of the Dodd-Frank Act[11] provides the manner of treatment of all orders, resolutions, determinations, regulations, and advisory materials that had been issued, made, prescribed, or allowed to become effective by the OTS. The section provides that if such materials were in effect on the day before the transfer date, they continue in effect and are enforceable by or against the appropriate successor agency until they are modified, terminated, set aside, or superseded in accordance with applicable law by such successor agency, by any court of competent jurisdiction, or by operation of law.

Pursuant to section 316(c) of the Dodd-Frank Act,[12] on June 14, 2011, the FDIC's Board of Directors approved a ''List of OTS Regulations to be Enforced by the OCC and the FDIC Pursuant to the Dodd-Frank Wall Street Reform and Consumer Protection Act.'' This list was published by the FDIC and the OCC as a Joint Notice in the **Federal Register** on July 6, 2011.[13]

Although section 312(b)(2)(B)(i)(II) of the Dodd-Frank Act[14] granted the OCC rulemaking authority relating to both State and Federal savings associations, nothing in the Dodd-Frank Act affected the FDIC's existing authority to issue regulations under the Federal Deposit Insurance Act (FDI Act)[15] and other laws as the ''appropriate Federal banking agency'' or under similar statutory terminology. Section 312(c) of the Dodd-Frank Act[16] revised the definition of ''appropriate Federal banking agency'' contained in section 3(q) of the FDI Act[17] to add State savings associations to the list of entities for which the FDIC is designated as the ''appropriate Federal banking agency.'' As a result, when the FDIC is designated as the ''appropriate Federal banking agency'' (or under similar terminology) for State savings associations, the FDIC is authorized to issue, modify, and rescind regulations involving such associations.

As noted, on July 14, 2011, operating pursuant to this authority, the FDIC's Board of Directors reissued and re-designated certain transferring regulations of the former OTS. These transferred OTS regulations were published as new FDIC regulations in the **Federal Register** on August 5, 2011.[18] When it republished the transferred OTS regulations as new FDIC regulations, the FDIC specifically noted that its staff would evaluate the transferred OTS rules and might later recommend incorporating the transferred OTS regulations into other FDIC rules, amending them, or rescinding them, as appropriate.[19]

B. 12 CFR Part 559

In 1996, the OTS adopted part 559, entitled *Subordinate Organizations,* which updated and substantially streamlined its regulations and statements of policy concerning subsidiaries and other subordinate organizations in which savings associations have ownership interests (including operating subsidiaries and service corporations) and equity investments (including pass-through investments).[20] Part 559 consolidated all OTS regulations affecting thrift subsidiaries in order to make it easier for savings associations to find and use these regulations.

The definitions in part 559 were derived in large part from existing OTS regulatory or statutory definitions.[21] Subpart B of part 559 was applicable to all savings associations. Section 559.10 prescribed requirements for a savings association and its subordinate organizations to establish and maintain separate identities in order to reduce the potential for customer confusion and to allow a court to hold the parent savings association liable for the subordinate organization's conduct or obligations. In order to establish or acquire a new subsidiary or engage in new activities, savings associations were required to follow the notice procedures set forth in § 559.11.

Part 559 addressed securities and investments issues related to savings associations as well. Section 559.12 included a replacement for an existing OTS regulation that required a savings association to notify the OTS before a subsidiary issues securities, regardless of the purpose for which the proceeds will be used, and incorporated requirements providing that securities issued by all subsidiaries state that they are not covered by federal deposit insurance and may not be called or accelerated in the event of the savings association's insolvency.[22] Section 559.13 replaced the application procedure for salvage investments, with a 30-day notice requirement.[23] In the notice, a savings association must fully document its additional investment in a service corporation or a lower-tier entity in a manner that demonstrates how its action is consistent with safety and soundness and document the other salvage alternatives that it considered.[24] The OTS added language to emphasize that investments made using salvage power authority continue to be considered investments for purposes of the capital regulation.[25]

C. Part 390, Subpart O

12 CFR part 559, as discussed above, was transferred to the FDIC with nominal changes. It is now found in the FDIC's rules at subpart O, entitled *Subordinate Organizations.*[26] Subpart O governs a range of requirements for subordinate organization of State savings associations, as further discussed below.

III. The Proposal

Section 316(b)(3) of the Dodd-Frank Act in pertinent part, provides that the regulations of the former OTS, as they apply to State savings associations, will be enforceable by the FDIC until they are modified, terminated, set aside, or superseded in accordance with applicable law.[27] Consistent with the FDIC's stated intention to evaluate transferred OTS regulations before taking action on them, the FDIC conducted a careful review of subpart O and related Federal statutes, regulation, and statements of policy relevant to subordinate organizations of State savings associations. As discussed in Part III of this Supplementary Information section, the FDIC proposes to rescind and remove subpart O in its entirety, because the provisions contained there are duplicative of substantially similar FDIC statutory or regulatory provisions, or guidance that produce the same supervisory result.

Section 28 of the FDI Act prohibits a State savings association from engaging

[9] Public Law 111–203, 124 Stat. 1376 (2010).
[10] 12 U.S.C. 5411.
[11] 12 U.S.C. 5414(b).
[12] 12 U.S.C. 5414(c).
[13] 76 FR 39246 (July 6, 2011).
[14] 12 U.S.C. 5412(b)(2)(B)(i)(II).
[15] 12 U.S.C. 1811 *et seq.*
[16] 12 U.S.C. 5412(c)(1).
[17] 12 U.S.C. 1813(q).
[18] 76 FR 47652 (Aug. 5, 2011).
[19] *Id.*
[20] 61 FR 66561, 66562 (Dec. 18, 1996).
[21] *Id* at 66563.
[22] *Id.* at 66567.
[23] *Id.*
[24] *Id.*
[25] *Id.* For example, a salvage investment in a nonincludable subsidiary would be deducted in calculating the State savings association's capital.
[26] 12 CFR part 390, subpart O.
[27] 12 U.S.C. 5414(b)(3).

as principal in any type of activity, or in any activity in an amount, that is not permissible for a Federal savings association unless the FDIC has determined the activity would pose no significant risk to the Deposit Insurance Fund (DIF); and the savings association is and continues to be in compliance with the capital standards set forth in section 5(t) of HOLA.[28] The FDIC proposes to use 12 CFR part 362, *Activities of Insured State Banks and Insured Savings Associations,* as applicable, which provides a substantially similar process for an insured State savings association, or its subsidiary, to apply for prior consent from the FDIC to engage in certain activities, that are not otherwise prohibited by federal or state law, while reaching substantially the same result as provided in subpart O without the burden of referring to a duplicative set of regulations.

Subpart C of part 362 governs the activities of insured State savings associations and implements section 28(a) of the FDI Act, which restricts and prohibits insured state savings associations and their service corporations from engaging in activities and investments of a type that are not permissible for a Federal savings association and their service corporations.

Subpart D of part 362 governs acquiring, establishing, or conducting new activities through a subsidiary by an insured State savings association, and implements section 18(m) of the FDI Act, which requires that prior notice be given to the FDIC when an insured savings association establishes or acquires a subsidiary or engages in any new activity in a subsidiary. In doing so it applies the definitions of § 362.2 unless otherwise indicated. The phrase ''activity permissible for a Federal savings association'' means any activity authorized for a Federal savings association under any statute including the Home Owners' Loan Act (HOLA),[29] as well as activities recognized as permissible for a Federal savings association in regulations issued by the OCC or in bulletins, orders or written interpretations issued by the OCC, or by the former OTS until modified, terminated, set aside, or superseded by the OCC.[30]

[28] 12 U.S.C. 1831e(a).

[29] 12 U.S.C. 1464 *et seq.*

[30] 12 CFR 362.9(a).

IV. Section-by-Section Analysis

A. Section 390.250—What does this subpart cover?

Section 390.250 sets forth the FDIC's general rulemaking and supervisory authority under the FDI Act, its specific authority under section 18(m) of the Federal Deposit Insurance Act[31] and subpart O's application to subordinate organizations of State savings associations. Pursuant to this section, the FDIC may, at any time, limit a State savings association's investment in any of its subordinate organizations, or may limit or refuse to permit any activities of any of these entities for supervisory, legal, or safety and soundness reasons. For the purposes of subpart O, notices are applications for purposes of statutory and regulatory references to the term ''applications.'' Further, any conditions that the FDIC imposes in approving any application are enforceable as a condition imposed in writing by the FDIC in connection with the granting of a request by a State savings association within the meaning of section 8(b) or 8(i) of the FDI Act.[32]

Part 362, which includes subparts C and D, is issued pursuant to several FDIC authorities, including the FDIC's general rulemaking authority pursuant to section 9(a)(Tenth) and section 28 of the FDI Act, the FDIC's statutory authority over the activities of State savings associations and subsidiaries, that are substantially similar to the authorizing statutes pursuant to which subpart O and § 390.250 were issued. Therefore, the FDIC is proposing to remove subpart O and proposes to use part 362, subparts C and D, as applicable, to achieve substantially similar supervisory results for State savings associations and subsidiaries as could be obtained through subpart O.

B. Section 390.251—Definitions

Section 390.251 is a definition section related to subordinate organizations. Included in the definitions section are: *Control, GAAP-consolidated subsidiary, lower-tier entity, ownership interest, subordinate organization,* and, *subsidiary.*

The *control* definition is a cross-reference to the former OTS § 391.41 definition,[33] which provided that a controlling shareholder is any person who, directly or indirectly, or acting in concert with one or more persons or companies, or together with members of his or her immediate family, owns, controls, or holds with power to vote 10 percent or more of the voting stock of a company, or controls in any manner the election or appointment of a majority of the company's board of directors.[34] For the purposes of State savings associations and their services companies, the FDIC proposes to apply the § 362.2(e) *control* definition. Pursuant to § 362.2(e), control means ''the power to vote, directly or indirectly, 25 percent or more of any class of the voting securities of a company, the ability to control in any manner the election of a majority of a company's directors or trustees, or the ability to exercise a controlling influence over the management and policies of a company.''[35] This definition is consistent with the control definition applicable to service companies of Federal savings associations which references the FRB's part 225, Regulation Y.[36]

The definition of *equity investment* in § 362.2(g) is broader than the definition of *ownership interest* in 390.251, which ''means any equity interest in a business organization, including stock, limited or general partnership interests, or shares in a limited liability company.'' *Equity investment* ''means an ownership interest in any company; any membership interest that includes a voting right in any company; any interest in real estate; any transaction which in substance falls into any of these categories even though it may be structured as some other form of business transaction; and includes an equity security.''[37] Similarly, the definition of *subsidiary* pursuant to § 362.2(r) is substantially similar to the subsidiary definition in § 390.251. The distinction is that § 362.2(r) defines a *subsidiary* as ''any company that is owned or controlled directly or indirectly by one or more insured depository institutions, rather than only by a State savings association.''

In the 1996 preamble to part 559, the OTS stated that the *subordinate organization* definition encompassed all business organizations in which a savings association has a direct or indirect ownership interest except where that ownership interest has been acquired through the use of the savings association's pass-through investment authority.[38] The OTS further explained

[31] 12 U.S.C. 1828(m).

[32] 12 U.S.C. 1818(b); 1818(i).

[33] The FDIC rescinded control definition at § 391.41 as part of its 2015 *Filing Requirements and Processing Procedures for Changes in Control with respect to State Nonmember Banks and State Savings Associations* rulemaking. 80 FR 65889 (Oct. 28, 2015).

[34] 12 CFR 391.41 (2015).

[35] 12 CFR 362.2(e).

[36] 12 CFR 5.59(d); 12 CFR part 225.

[37] 12 CFR 362.2(g).

[38] 61 FR at 66563.

the term was adopted primarily in order to avoid potential confusion arising from the use of the term *subsidiary* both as a generic term for a business organization in which a savings association has an ownership interest and as a more specific term used to describe a narrower category of companies in which the savings association's ownership interest is significant enough to give it direct or indirect control.[39] The OTS also added to part 559 *lower-tier entity,* which includes all business organizations in which an operating subsidiary, service corporation, or other subordinate organization has an ownership interest, such as *second-tier service corporations* or *service corporation subsidiaries.* The distinctions in these two definitions do not appear to enhance the quality of State savings association supervision from the perspective of the State savings association or the FDIC, as supervisor; therefore, the FDIC proposes to rescind and remove these definitions. Likewise, the OCC rescinded and removed these definitions in the 2015 rule integrating licensing rules of national banks and Federal savings associations.[40]

Lastly, the FDIC believes that a separate definition for *GAAP-consolidated subsidiary* is unnecessary as State savings association reports and financial statements are required to be uniform and consistent with U.S. generally accepted accounting principles (GAAP) pursuant to section 37 of the FDI Act and section 4(b) of the Homeowners Owners Loan Act (HOLA).[41] Further, the instructions to the Consolidated Reports of Condition and Income (Call Report) state that the regulatory reporting requirements applicable to the Call Report shall conform to GAAP as set forth in the Financial Accounting Standards Board's Accounting Standards Codification.[42] Because State savings associations have existing statutory directives to use GAAP in reporting and financial statements, eliminating a substantially similar regulation regarding GAAP-consolidated subsidiaries likely would not affect the quality of State savings association reporting and financial statements.

For these reasons, the FDIC proposes to rescind § 390.251 in its entirety.

C. Section 390.252—How must separate corporate entities be maintained?

Section 390.252 requires State savings associations and their subordinate organizations to operate in a manner that demonstrates to the public that they are separate corporate entities because of concerns that a failure to maintain separate corporate existences could potentially result in a court, for equitable reasons, holding the savings association liable for the obligations of the subordinate organization.[43] This requires that State savings associations and their subordinate organizations must independently meet in order to meet this requirement. The requirements provide that each State savings association and subordinate organization: (1) Avoid intermingling their business transactions, accounts and records; (2) observe separate corporate procedures; (3) be adequately financed as separate entities based on the character and size of their respective businesses; (4) each independently hold out itself to the public as separate enterprise; and that (5) indicate that the State savings association is not liable for any borrowings by the subordinate organization, unless the parent State savings association has guaranteed a loan to the subordinate organization.[44]

The core eligibility requirements in § 362.4(c) describe corporate separateness in the context of the state-chartered depository institution-subsidiary. The eligible subsidiary requirements in 362.4(c)(2)—which are more detailed than eligible subsidiary requirements of 390.252—are designed specifically for the bank/subsidiary relationship, and provide for separation between the state-chartered depository institution and its subsidiary to lessen the possibility of piercing the corporate veil; deduction of the state-chartered depository institution investment in the subsidiary to segregate the capital supporting the state-chartered depository institution from the capital supporting the subsidiary; and limitations on the state-chartered depository institution's investment in the subsidiary and on transactions with the subsidiary to ensure transactions are arms-length.[45] The eligible subsidiary requirements are also incorporated into § 362.13. Section 362.13 permits a State savings association that previously filed an application, and obtained the FDIC's consent to engage in an activity or to acquire or retain an investment in a service corporation engaging as principal in an activity, to continue the activity or retain the investment without seeking the FDIC's consent, provided the State savings association and the service corporation, if applicable, continue to meet the conditions and restrictions of approval if the insured state savings association and any applicable service corporation meet the requirements of § 362.4(c)(2).[46]

The provisions of § 362.4(c)(2) that are duplicative of § 390.251 require that an eligible subsidiary: (1) Meet applicable statutory or regulatory capital requirements and have sufficient operating capital for normal obligations that are reasonably foreseeable for a business of its size and character; (2) be physically separate and distinct in its operations from the operations of the state-chartered depository institution; (3) maintain separate accounting and other business records; (4) observe separate business entity formalities; (5) conduct business pursuant to independent policies and procedures designed to inform customers and prospective customers of the subsidiary that the subsidiary is a separate organization from the state-chartered depository institution; and (6) that the state-chartered depository institution is not responsible for, and does not guarantee, the obligations of the subsidiary.[47]

State savings associations and service corporations that qualify as eligible depository institutions and eligible subsidiaries pursuant to § 362.4(c) maintain separate corporate identities, which should sufficiently insulate State savings associations from the liabilities of subsidiaries. For this reason, the FDIC proposes to remove and rescind § 390.252 as duplicative.[48]

D. Section 390.253—What notices are required to establish or acquire a new subsidiary or engage in new activities through a subsidiary?

Pursuant to § 390.253, a State savings association must file a notice with the FDIC prior to establishing, acquiring or engaging in new activities of a subsidiary as required under section 18(m) of the FDI Act.[49] This section provides that such a notice must contain all of the information required under § 362.15, is subject to FDIC objection, and must be filed at least 30 days prior

[39] *Id.*

[40] 80 FR 28414, May 18, 2015. Regulations pertaining to operating subsidiaries of Federal savings associations and service corporations are found at 12 CFR 5.38 and 5.59, respectively.

[41] 12 U.S.C. 1831n(a)(2); 12 U.S.C. 1463(b)(2).

[42] Instructions for Preparation of Consolidated Reports of Condition and Income, Form FFIEC 031 and 041 *https://www.ffiec.gov/pdf/FFIEC_forms/FFIEC031_FFIEC041_201906_i.pdf.*

[43] 61 FR at 66567.

[44] 12 CFR 390.252(a).

[45] 12 CFR 362.4(c). *See* FIL–97–97. September 23, 1997.

[46] 12 CFR 362.13.

[47] Section 362.4(c)(2)(vii) corresponds to §§ 390.252(a)(4) and (5).

[48] The OCC retained separate corporate identity provisions for service corporation in its 2015 final rule integrating licensing rules of national banks and Federal savings associations. 80 FR 28467, May 18, 2015. 12 CFR 5.59(e)(8).

[49] 12 CFR 390.253. *See* 12 U.S.C 1828(m)(1).

to the establishment or acquisition of a subsidiary or commencement of a new activity through a subsidiary. The notice requirements of § 362.15 are substantially similar to the transferred OTS notice requirement in § 390.253. For this reason, the FDIC proposes to rescind and remove § 390.253 because it is duplicative.

Federal Savings Association Notice Requirement in § 362.15

Section 363(7) of the Dodd-Frank Act amended section 18(m) of the FDI Act to change notification requirements for insured savings associations as a result of the transfer of the powers, duties, and functions formerly performed by the OTS that were divided among the FDIC, as to State savings associations, and the Office of the Comptroller of the Currency (OCC), as to Federal savings associations.[50] After the Dodd-Frank Act amendment of section 18(m) of the FDI Act, Federal savings associations are no longer required to provide notice to the FDIC prior to the establishment, or acquisition, of a subsidiary, or prior to commencement of a new activity in a subsidiary controlled by a federal savings association.[51] State savings banks must continue to notify the FDIC at least 30 days prior to establishing or acquiring a subsidiary or prior to commencement of a new activity through a State savings association-controlled subsidiary pursuant to section 18(m).[52] To reflect the amendment, the FDIC proposes to remove the references to Federal savings association notice requirements remaining in § 362.15 as part of the proposal.[53]

E. Section 390.254—How may a subsidiary of a State savings association issue securities?

Section 390.254 permits a State savings association subsidiary to issue, either directly or through a third party intermediary, any securities that its parent State savings association is permitted to issue. The subsidiary must not state or imply that the securities it issues are covered by federal deposit insurance, nor may it issue any security the payment, maturity, or redemption of which may be accelerated upon the condition that State savings association is insolvent or is placed into receivership.[54] The State savings association, for as long as any securities are outstanding, must maintain all records generated through each securities issuance in the ordinary course of business, including a copy of any prospectus, offering circular, or similar document concerning such issuance, and make such records available for examination by the FDIC.[55] Such records must include, but are not limited to: (1) The amount of assets or liabilities (including any guarantees made with respect to the securities issuance) that have been transferred or made available to the subsidiary; the percentage that such amount represents of the current book value of assets on an unconsolidated basis; and the current book value of all such assets of the subsidiary; (2) the terms of any guarantee(s) issued by the State savings association or any third party; (3) a description of the securities the subsidiary issued; (4) the net proceeds from the issuance of securities (or the pro rata portion of the net proceeds from securities issued through a jointly owned subsidiary); the gross proceeds of the securities issuance; and the market value of assets collateralizing the securities issuance (any assets of the subsidiary, including any guarantees of its securities issuance made); (5) the interest or dividend rates and yields, or the range thereof, and the frequency of payments on the subsidiary's securities; (6) the minimum denomination of the subsidiary's securities; and (7) where the subsidiary marketed or intends to market the securities.[56]

The OCC retained certain of these requirements for operating subsidiaries and service corporations of Federal savings associations in the 2015 final rule integrating licensing rules of national banks and Federal savings associations.[57] Pursuant to OCC regulations, neither an operating subsidiary nor a service corporation ''shall state or imply that the securities it issues are covered by Federal deposit insurance,'' or ''issue any security the payment, maturity, or redemption of which may be accelerated upon the condition that the controlling Federal savings association is insolvent or has been placed into receivership, and for as long as any securities are outstanding, the controlling Federal savings association must maintain all records generated through each securities issuance in the ordinary course of business, including but not limited to a copy of the prospectus, offering circular, or similar document concerning such issuance, and make such records available for examination by the OCC.'' [58]

State savings association subsidiaries are permitted to issue securities pursuant to section 28 of the FDI Act because the operating subsidiaries and service corporations of Federal savings associations are permitted to issue securities, subject to regulatory limitations. State savings associations and subsidiaries are reminded that subsidiary issuances, like other permissible activities, are subject to the same restrictions or conditions imposed on the Federal savings association and must be conducted in the same manner in which an operating subsidiary or service corporation is authorized to issue such securities.

Accordingly, a State savings association subsidiary should not state or imply that the securities it issues are covered by Federal deposit insurance, or issue any security the payment, maturity, or redemption of which may be accelerated upon the condition that the controlling State savings association is insolvent or has been placed into receivership, and for as long as any securities are outstanding, the controlling State savings association must maintain all records generated through each securities issuance in the ordinary course of business, including but not limited to a copy of the prospectus, offering circular, or similar document concerning such issuance, and make such records available for examination by the FDIC. For these reasons, the FDIC proposes to remove and rescind § 390.254.

F. Section 390.255—How may a State savings association exercise its salvage power in connection with a service corporation or lower-tier entities?

Section 390.255 generally permits a State savings association to notify the FDIC at least 30 days before making a contribution or a loan (including a guarantee of a loan made by any other person) to a lower-tier entity (salvage investment) that exceeds the maximum amount otherwise permitted under law or regulation to exercise its power to salvage the underlying asset (typically, an outstanding loan). Without the salvage power provision, the maximum amount a State savings association would be permitted would be related the loans to one borrower limit (LTOB Limit), which is equivalent to the applicable state's legal lending limit.

The salvage power doctrine was a long-held position of the OTS and its

[50] Public Law 111–203, 124 Stat 1376 (2010).

[51] 12 U.S.C. 1828(m).

[52] *Id.*

[53] 12 CFR 362.15.

[54] 12 CFR 390.254(a).

[55] 12 CFR 390.254(c).

[56] *Id.*

[57] 80 FR 28414, May 18, 2015. Regulations pertaining to issuance of securities of operating subsidiaries and service corporations of Federal savings associations are found at 12 CFR 5.38(e)(7) and 5.59(e)(9), respectively.

[58] 12 CFR 5.38(e)(7); 12 CFR 5.59(e)(9).

predecessor, the Federal Home Loan Bank Board (FHLBB),[59] that a Federal savings association has inherent or implied authority to take whatever steps may be necessary to salvage an investment.[60] When integrating the OTS regulations for Federal savings associations, the OCC adopted the position that a Federal savings association has inherent or implied authority to use salvage power,[61] as well as the position that the LTOB Limit is not a specific legal prohibition with respect to the salvage powers doctrine.[62]

Because a State savings association derives its powers, including salvage power, from its respective State chartering banking agency, there may be lack of uniformity among State LTOB Limits (or legal lending limit).[63] For these reasons, staff proposes that State savings associations apply to the FDIC for prior approval pursuant to § 362.11 before making a contribution or a loan to a lower-tier entity (salvage investment) that exceeds the maximum amount otherwise permitted under law or regulation to exercise its power to salvage the underlying asset to be consistent with State law. The applicant would be required to provide evidence that the State approved any exception over the LTOB limit.[64]

For these reasons, the FDIC proposes to remove and rescind § 390.255.

IV. Expected Effects

As of June 30, 2020, the FDIC supervised 3,270 depository institutions, of which 35 (1.1 percent) are State savings associations.[65] The proposed rule primarily would affect regulations that govern State savings associations. As previously discussed, the proposed rule, if adopted, would rescind part 390, subpart O because most of its elements are duplicative of, or substantially similar to the requirements of section 28 of the Federal Deposit Insurance Act (FDI Act) and its implementing regulations, subparts C and D of part 362 of the FDIC's Rules and Regulations, and section 37 of the FDI Act.

Additionally, the proposed rule would amend certain sections of part 362 to remove the references to Federal savings association notice requirements because Federal savings associations are no longer required to provide notice to the FDIC prior to the establishment, or acquisition, of a subsidiary, or prior to commencement of a new activity in a subsidiary controlled by a Federal savings association.[66] The FDIC does not believe that the proposed rule will have substantive effects on State savings associations.

Section 390.250 sets forth the FDIC's general rulemaking and supervisory authority under the FDI Act, its specific authority under section 18(m) of the Federal Deposit Insurance Act[67] and subpart O's application to subordinate organizations of State savings associations. As previously discussed, State savings associations are subject to part 362, subparts C and D, which has the same statutory basis as § 390.350. Therefore, the FDIC believes that the practical application of part 362, subparts C and D, generally achieves the same outcomes for State savings associations as does subpart O. Therefore, the FDIC believes that the proposed rescission of § 390.250, if enacted, is unlikely to have any substantive effects for State savings associations or their subordinate organizations.

Section 390.251 is a definition section related to subordinate organizations. As previously discussed, the FDIC believes that the definitions of *subsidiary* and *GAAP-consolidated subsidiary* are substantially similar to and redundant to other statutory and regulatory requirements to which State savings associations are already subject. As previously discussed, State savings associations are already subject to a definition of *control* in part 362.2(e), a definition that is narrower, however, than the one in § 390.251. Therefore, rescission of § 390.251 could benefit State savings associations by narrowing the scope of investments in subordinate organizations that may be subject to limitation for supervisory, legal, or safety and soundness reasons asserted by the FDIC. Rescission of the definition of control in § 390.251 could further benefit State savings associations by creating parity with the control definition applicable to service companies of Federal savings associations which references the FRB's part 225, Regulation Y.[68] As previously discussed, State savings associations are already subject to a definition of *equity investment* in § 362.2(g), a definition that is broader, however, than the one in § 390.251. Therefore, rescission of § 390.251 is unlikely to pose additional costs for State savings associations because they are already subject to regulations with a substantively similar and broader defined scope of investments in subordinate organizations. Finally, the proposed rescission of § 390.251 would remove definitions of *lower-tier entity* and *second-tier service corporations* or *service corporation subsidiaries* for which there is no corollary in FDIC regulations. However, as previously discussed, the FDIC does not believe that the existence of these defined terms enhance the quality of State savings association supervision. Therefore, the FDIC believes that rescission of these definitions is unlikely to have any substantive effects on State savings associations.

Section 390.252 requires State savings associations and their subordinate organizations to operate in a manner that demonstrates to the public that they are separate corporate entities because of concerns that a failure to maintain separate corporate existences could potentially result in a court, for equitable reasons, holding the savings association liable for the obligations of

[59] A July 1941 legal opinion provided that savings associations had ''an inherent power and a positive duty'' to salvage an investment to protect the FSLIC insurance fund. FHLBB Op. G.C. B–50, Salvage Operations, July 1, 1941.

[60] Salvage powers permit Federal savings association to take whatever steps necessary to salvage an investment, provided the steps taken are integral parts of a reasonable and bona fide salvage plan and do not contravene a specific legal prohibition. Comptrollers Handbook, Other Real Estate Owned, Version 1.1, August 2018 p. 18.

[61] *See* 12 CFR 5.59(i). (Federal savings association permitted to exercise its salvage powers to make a salvage investment to a service corporation investment); *see also,* Comptroller's Handbook, Other Real Estate Owned (Federal savings association's salvage powers are derived from 12 CFR 160.30, General Lending and Investment Powers, and permit the acquisition, holding, and operation of OREO and the expenditure of additional funds in regard to OREO), *https://www.occ.treas.gov/publications-and-resources/publications/comptrollers-handbook/files/other-real-estate-owned/index-other-real-estate-owned.html,* last visited 7/9/2020.

[62] National banks and savings associations are subject to 12 CFR part 32, Lending Limits, but *see also* Comptroller's Handbook OREO (''(Note: The lending limit is not considered to be a specific legal prohibition within the meaning of the salvage powers doctrine.)'').

[63] *See 2007 WL 7112410, OTS RB 37–21, Examination Handbook, Asset Quality, Section 211, LOANS TO ONE BORROWER, December 13, 2007. Rescinded by OCC Bulletin 2012–19, dated June 29, 2012.* (''[s]tate-chartered savings associations have similar authority under state law.'') *See also,* 1975 WL 171273, Office of Thrift Supervision, August 7, 1975 (''[i]n the case of a state-chartered institution, the application must be accompanied by an opinion of counsel that the action proposed is within the institution's power.'') and 1975 WL 171331, Office of Thrift Supervision, December 19, 1975 (''[w]hether a state chartered association possesses similar salvage powers, [to a Federal savings association is] . . . governed by the laws of the chartering jurisdiction.'').

[64] LTOB Limits are established by state law of each chartering authority, and LTOB Limits are not consistent from state to state. Some states allow waivers or modifications, while others do not. Part 362 does not authorize any insured State savings association to make investments or conduct activities that are not authorized or that are prohibited by either Federal or State law. 12 CFR 362.9(c).

[65] Call Report data, June 30, 2020.

[66] 12 U.S.C. 1828(m).

[67] 12 U.S.C. 1828(m).

[68] 12 CFR 5.59(d); 12 CFR part 225.

the subordinate organization.[69] As discussed previously, FDIC-supervised depository institutions, including State savings associations and their subsidiaries, are covered by §§ 362.4(c) and 362.13, which are substantively similar to or broader than the obligations in § 390.252. Therefore, the FDIC believes that the proposed rescission of § 390.252, if adopted, is unlikely to have any substantive effect on State savings associations or their subsidiaries.

Section 390.253 establishes notification requirements for State savings associations prior to their establishing, acquiring or engaging in new activities of a subsidiary as required under section 18(m) of the FDI Act.[70] As discussed previously, State savings associations are already subject to substantively similar requirements in § 362.15. Therefore, the FDIC believes that the proposed rescission of § 390.253, if adopted, is unlikely to pose any substantive effects on State savings associations.

Section 362.15 established notification requirements for State and Federal savings associations prior to their establishing or acquiring a subsidiary, or conducting any new activity through a subsidiary. As discussed previously, after the Dodd-Frank Act amendment of section 18(m) of the FDI Act, Federal savings associations are no longer required to provide notice to the FDIC prior to the establishment, or acquisition, of a subsidiary, or prior to the commencement of a new activity in a subsidiary controlled by a federal savings association.[71] Therefore, the FDIC believes that the proposed rescission of references to Federal savings associations from § 362.15 is unlikely to have any substantive effect on insured depository institutions in that it is simply consistent with existing law.

Section 390.254 permits a State savings association subsidiary to issue, either directly or through a third party intermediary, any securities that its parent State savings association is permitted to issue. As discussed previously, although there is no corollary regulation for FDIC-supervised depository institutions, State savings association subsidiaries are permitted to issue securities pursuant to section 28 of the FDI Act because the operating subsidiaries and service corporations of Federal savings associations are permitted to issue securities, subject to regulatory limitations. Therefore, the FDIC believes that the proposed rescission of § 390.254, if adopted, is unlikely to have any substantive effect on State savings associations or their subsidiaries.

Section 390.255 generally permits a State savings association to notify the FDIC at least 30 days before making a contribution or a loan (including a guarantee of a loan made by any other person) to a lower-tier entity (salvage investment) that exceeds the maximum amount otherwise permitted under law or regulation to exercise its power to salvage the underlying asset (typically, an outstanding loan).[72] As discussed previously, State savings associations are currently subject to § 362.11 which requires State savings associations to seek prior approval from the FDIC before making a contribution or a loan to a lower-tier entity (salvage investment) that exceeds the maximum amount otherwise permitted under law or regulation to exercise its power to salvage the underlying asset to be consistent with State law. Therefore, the FDIC believes that the proposed rescission of § 390.255, if adopted, is unlikely to substantively affect State savings associations.

By removing duplicative or unnecessary regulations the FDIC believes that the proposed rule will benefit State savings associations by clarifying regulations and improving the ease of references.

V. Alternatives

The FDIC has considered alternatives to the rule but believes that the amendments represent the most appropriate option for covered institutions. As discussed previously, the Dodd-Frank Act transferred certain powers, duties, and functions formerly performed by the OTS to the FDIC. The FDIC's Board reissued and redesignated certain transferred regulations from the OTS, but noted that it would evaluate them and might later incorporate them into other FDIC regulations, amend them, or rescind them, as appropriate. The FDIC has evaluated the existing regulations relating to certain subordinate organizations of State savings associations. The FDIC considered the status quo alternative of retaining the current regulations, but did not choose to do so. The FDIC believes it would be unnecessary for FDIC-supervised institutions to continue to refer to these separate sets of regulations, and is therefore proposing to amend and rescind them.

VI. Request for Comments

The FDIC invites comments on all aspects of this proposed rulemaking, and specifically requests comments on the following:

1. What impact, if any, do you foresee in the FDIC's proposal to rescind Subpart O? Please substantiate your response.

Written comments must be received by the FDIC no later than November 25, 2020.

VII. Regulatory Analysis and Procedure

A. The Paperwork Reduction Act

In accordance with the requirements of the Paperwork Reduction Act of 1995 (PRA), the FDIC may not conduct or sponsor, and the respondent is not required to respond to, an information collection unless it displays a currently valid Office of Management and Budget (OMB) control number. The proposed rule would rescind and remove from FDIC regulations subpart O. The proposed rule will not create any new or revise any existing collections of information under the PRA. Therefore, no information collection request will be submitted to the OMB for review.

B. The Regulatory Flexibility Act

The Regulatory Flexibility Act (RFA), requires that, in connection with a notice of proposed rulemaking, an agency prepare and make available for public comment an initial regulatory flexibility analysis that describes the impact of the proposed rule on small entities.[73] However, a regulatory flexibility analysis is not required if the agency certifies that the rule will not have a significant economic impact on a substantial number of small entities, and publishes its certification and a short explanatory statement in the **Federal Register** together with the rule. The Small Business Administration (SBA) has defined ''small entities'' to include banking organizations with total assets of less than or equal to $600 million.[74] Generally, the FDIC considers

[69] 61 FR 66567.

[70] 12 CFR 390.253. *See* 12 U.S.C 1828(m)(1).

[71] 12 U.S.C. 1828(m).

[72] Without the salvage power provision, the maximum amount a State savings association would be permitted would be related the loans to one borrower limit (LTOB Limit), which is equivalent to the applicable state's legal lending limit.

[73] 5 U.S.C. 601, *et seq.*

[74] The SBA defines a small banking organization as having $600 million or less in assets, where an organization's ''assets are determined by averaging the assets reported on its four quarterly financial statements for the preceding year.'' See 13 CFR 121.201 (as amended, by 84 FR 34261, effective August 19, 2019). ''SBA counts the receipts, employees, or other measure of size of the concern whose size is at issue and all of its domestic and foreign affiliates.'' See 13 CFR 121.103. Following these regulations, the FDIC uses a covered entity's affiliated and acquired assets, averaged over the preceding four quarters, to determine whether the covered entity is ''small'' for the purposes of RFA.

a significant effect to be a quantified effect in excess of 5 percent of total annual salaries and benefits per institution, or 2.5 percent of total non-interest expenses. The FDIC believes that effects in excess of these thresholds typically represent significant effects for FDIC-supervised institutions. For the reasons provided below, the FDIC certifies that the proposed rule, if adopted in final form, would not have a significant economic impact on a substantial number of small banking organizations. Accordingly, a regulatory flexibility analysis is not required.

As of June 30, 2020, the FDIC supervised 3,270 insured depository institutions, of which 2,548 are considered small banking organizations for the purposes of RFA. The proposed rule primarily affects regulations that govern State savings associations.[75] There are 33 State savings associations considered to be small banking organizations for the purposes of the RFA.[76]

As explained previously, the proposed rule would remove §§ 390.250 through 390.255 of subpart O because these sections are unnecessary or redundant of existing federal banking laws or regulations that prescribe requirements subsidiaries of State savings associations. Because these regulations are redundant to existing regulations, rescinding them would not have any substantive effects on small FDIC-supervised institutions.

Based on the information above, the FDIC certifies that the proposed rule would not have a significant economic impact on a substantial number of small entities.

2. The FDIC invites comments on all aspects of the supporting information provided in this RFA section. In particular, would this rule have any significant effects on small entities that the FDIC has not identified?

C. Plain Language

Section 722 of the Gramm-Leach-Bliley Act[77] requires each Federal banking agency to use plain language in all of its proposed and final rules published after January 1, 2000. As a federal banking agency subject to the provisions of this section, the FDIC has sought to present the proposed rule to rescind subpart O in a simple and straightforward manner.

3. The FDIC invites comments on whether the proposal is clearly stated and effectively organized, and how the FDIC might make the proposal easier to understand.

D. The Economic Growth and Regulatory Paperwork Reduction Act

Under section 2222 of the Economic Growth and Regulatory Paperwork Reduction Act of 1996 (EGRPRA), the FDIC is required to review all of its regulations, at least once every 10 years, in order to identify any outdated or otherwise unnecessary regulations imposed on insured institutions.[78] The FDIC, along with the other federal banking agencies, submitted a Joint Report to Congress on March 21, 2017, (EGRPRA Report) discussing how the review was conducted, what has been done to date to address regulatory burden, and further measures that will be taken to address issues that were identified. As noted in the EGRPRA Report, the FDIC is continuing to streamline and clarify its regulations through the OTS rule integration process. By removing outdated or unnecessary regulations, such as subpart O, this proposal complements other actions the FDIC has taken, separately and with the other federal banking agencies, to further the EGRPRA mandate.

List of Subjects

12 CFR Part 362

Administrative practice and procedure, Authority delegations (Government agencies), Bank deposit insurance, Banks, banking, Investments, Reporting and recordkeeping requirements.

12 CFR Part 390

Administrative practice and procedure, Advertising, Aged, Civil rights, Conflict of interests, Credit, Crime, Equal employment opportunity, Fair housing, Government employees, Individuals with disabilities, Reporting and recordkeeping requirements, Savings associations.

Authority and Issuance

For the reasons stated in the preamble, the Federal Deposit Insurance Corporation proposes to amend 12 CFR parts 362 and 390 as follows:

PART 362—ACTIVITIES OF INSURED STATE BANKS AND INSURED SAVINGS ASSOCIATIONS

■ 1. The authority citation for part 362 continues to read as follows:

Authority: 12 U.S.C. 1816, 1818, 1819(a)(Tenth), 1828(j), 1828(m), 1828a, 1831a, 1831e, 1831w, 1843(l).

■ 2. Revise § 362.15 to read as follows:

§ 362.15 Acquiring or establishing a subsidiary; conducting new activities through a subsidiary.

No State insured savings association may establish or acquire a subsidiary, or conduct any new activity through a subsidiary, unless it files a notice in compliance with § 303.142(c) of this chapter at least 30 days prior to establishment of the subsidiary or commencement of the activity and the FDIC does not object to the notice. This requirement does not apply to any State savings association that acquired its principal assets from a Federal savings bank that was chartered prior to October 15, 1982, as a savings bank under State law.

PART 390—REGULATIONS TRANSFERRED FROM THE OFFICE OF THRIFT SUPERVISION

■ 3. The authority citation for part 390 is revised to read as follows:

Authority: 12 U.S.C. 1819.

Subpart F also issued under 5 U.S.C. 552; 559; 12 U.S.C. 2901 *et seq.*

Subpart G also issued under 12 U.S.C. 2810 *et seq.,* 2901 *et seq.;* 15 U.S.C. 1691; 42 U.S.C. 1981, 1982, 3601–3619.

Subpart Q also issued under 12 U.S.C. 1462; 1462a; 1463; 1464.

Subpart W also issued under 12 U.S.C. 1462a; 1463; 1464; 15 U.S.C. 78c; 78l; 78m; 78n; 78p; 78w.

Subpart Y also issued under 12 U.S.C. 1831o.

Subpart O—[Removed and Reserved]

■ 4. Remove and reserve subpart O, consisting of §§ 390.250 through 390.255.

Federal Deposit Insurance Corporation.

By order of the Board of Directors.

Dated at Washington, DC, on October 20, 2020.

James P. Sheesley,

Assistant Executive Secretary.

[FR Doc. 2020–23525 Filed 10–21–20; 4:15 pm]

BILLING CODE 6714–01–P

[75] FDIC Call Report, June 30, 2020.

[76] *Id.*

[77] Public Law 106–102, 113 Stat. 1338, 1471 (codified at 12 U.S.C. 4809).

[78] Public Law 104–208, 110 Stat. 3009 (1996).

DEPARTMENT OF TRANSPORTATION

Federal Aviation Administration

14 CFR Part 39

[Docket No. FAA–2020–0920; Project Identifier AD–2020–00662–R]

RIN 2120–AA64

Airworthiness Directives; Sikorsky Aircraft and Sikorsky Aircraft Corporation Helicopters

AGENCY: Federal Aviation Administration (FAA), DOT.

ACTION: Notice of proposed rulemaking (NPRM).

SUMMARY: The FAA proposes to adopt a new airworthiness directive (AD) for all Sikorsky Aircraft Model S–61L, S–61N, S–61NM, and S–61R helicopters and Sikorsky Aircraft Corporation Model S–61A, S–61D, S–61E, and S–61V restricted category helicopters. This proposed AD was prompted by the manufacturer determining that there may be arm assemblies in service that have accumulated 15,000 or more hours time-in-service (TIS), which exceeds the service life limit for this component. This proposed AD would require reviewing the mixer unit component log card or equivalent record and, depending on the number of hours TIS, calculating the remaining life of the arm assembly or removing the arm assembly from service. The FAA is proposing this AD to address the unsafe condition on these products.

DATES: The FAA must receive comments on this proposed AD by December 10, 2020.

ADDRESSES: You may send comments, using the procedures found in 14 CFR 11.43 and 11.45, by any of the following methods:

- *Federal eRulemaking Portal:* Go to *https://www.regulations.gov.* Follow the instructions for submitting comments.
- *Fax:* 202–493–2251.
- *Mail:* U.S. Department of Transportation, Docket Operations, M–30, West Building Ground Floor, Room W12–140, 1200 New Jersey Avenue SE, Washington, DC 20590.
- *Hand Delivery:* Deliver to Mail address above between 9 a.m. and 5 p.m., Monday through Friday, except Federal holidays.

For service information identified in this NPRM, contact Sikorsky Aircraft Corporation, 6900 Main Street, P.O. Box 9729, Stratford, CT 06615; phone: 203–386–4000. You may view this service information at the FAA, Office of the Regional Counsel, Southwest Region, 10101 Hillwood Pkwy., Room 6N–321, Fort Worth, TX 76177. For information on the availability of this material at the FAA, call 817–222–5110.

Examining the AD Docket

You may examine the AD docket on the internet at *https://www.regulations.gov* by searching for and locating Docket No. FAA–2020–0920; or in person at Docket Operations between 9 a.m. and 5 p.m., Monday through Friday, except Federal holidays. The AD docket contains this NPRM, any comments received, and other information. The street address for Docket Operations is listed above.

FOR FURTHER INFORMATION CONTACT: Neil Doh, Aerospace Engineer, Boston ACO Branch, FAA, 1200 District Avenue, Burlington, MA 01803; phone: 781–238–7757; fax: 781–238–7199; email: *neil.doh@faa.gov.*

SUPPLEMENTARY INFORMATION:

Comments Invited

The FAA invites you to send any written relevant data, views, or arguments about this proposal. Send your comments to an address listed under the **ADDRESSES** section. Include ''Docket No. FAA–2020–0920; Project Identifier AD–2020–00662–R'' at the beginning of your comments. The most helpful comments reference a specific portion of the proposal, explain the reason for any recommended change, and include supporting data. The FAA will consider all comments received by the closing date and may amend this NPRM because of those comments.

Except for Confidential Business Information as described in the following paragraph, and other information as described in 14 CFR 11.35, the FAA will post all comments received, without change, to *https://www.regulations.gov,* including any personal information you provide. The agency will also post a report summarizing each substantive verbal contact received about this proposal.

Confidential Business Information

Confidential Business Information (CBI) is commercial or financial information that is both customarily and actually treated as private by its owner. Under the Freedom of Information Act (FOIA) (5 U.S.C. 552), CBI is exempt from public disclosure. If your comments responsive to this NPRM contain commercial or financial information that is customarily treated as private, that you actually treat as private, and that is relevant or responsive to this NPRM, it is important that you clearly designate the submitted comments as CBI. Please mark each page of your submission containing CBI as ''PROPIN.'' The FAA will treat such marked submissions as confidential under the FOIA, and they will not be placed in the public docket of this NPRM. Submissions containing CBI should be sent to Neil Doh, Aerospace Engineer, Boston ACO Branch, FAA, 1200 District Avenue, Burlington, MA 01803. Any commentary that the FAA receives which is not specifically designated as CBI will be placed in the public docket for this rulemaking.

Background

The FAA proposes to adopt a new AD for Sikorsky Aircraft Model S–61L, S–61N, S–61NM, and S–61R helicopters and Sikorsky Aircraft Corporation Model S–61A, S–61D, S–61E, and S–61V restricted category helicopters, with an arm assembly, part number S6140–62614–009, installed. The FAA learned from Sikorsky Aircraft Corporation that Sikorsky S–61 Helicopter Alert Service Bulletin (ASB) 61B General-1, Revision No. Z, dated November 13, 2018, which is applicable to Sikorsky Model S–61L, S–61N, S–61NM, and S–61R helicopters, failed to include the life limit of the redesigned arm assembly. As a result, Sikorsky Aircraft Corporation determined that there may be arm assemblies in service with 15,000 or more hours TIS, which exceeds the service life limit for this component. The proposed actions are intended to prevent an arm assembly from remaining in service beyond its life limit. This condition, if not addressed, could result in reduced or loss of tail rotor control and reduced control of the helicopter.

FAA's Determination

The FAA is issuing this NPRM because the agency has determined that the unsafe condition described previously is likely to exist or develop in other products of the same type design.

Related Service Information Under 1 CFR Part 51

The FAA reviewed Sikorsky S–61 Helicopter ASB 61B40–11, Basic Issue, dated March 2, 2020 (''the ASB''). The ASB describes procedures for a one-time inspection of the mixer unit component log card to verify the arm assembly life limit and, if the life limit has been exceeded, to replace the arm assembly for Sikorsky Model S–61L, S–61N, and S–61NM helicopters. This service information is reasonably available because the interested parties have access to it through their normal course of business or by the means identified in the **ADDRESSES** section.

Other Related Service Information

The FAA reviewed Sikorsky S–61 Helicopter ASB 61B General–1, Revision AA, dated February 24, 2020. This service information summarizes and lists parts with mandatory retirement times and inspections for Sikorsky Model S–61L, S–61N, and S–61NM helicopters.

Proposed AD Requirements in This NPRM

This proposed AD would require reviewing the mixer unit component log card or equivalent record and, depending on the hours time-in-service of the arm assembly, calculating the remaining life of the arm assembly or removing the arm assembly from service.

Differences Between This Proposed AD and the Service Information

The ASB is effective only for Sikorsky Aircraft Model S–61L, S–61N, and S–61NM helicopters. In addition to these helicopters, the applicability of this proposed AD also includes Sikorsky Aircraft Model S–61R helicopters and Sikorsky Aircraft Corporation Model S–61A, S–61D, S–61E, and S–61V restricted category helicopters. The FAA is proposing to expand the applicability to prevent the installation of arm assemblies that have exceeded their life limits on helicopters with a similar type design as those helicopters affected by the ASB.

Costs of Compliance

The FAA estimates that this AD, as proposed, would affect 13 helicopters of U.S. registry.

The FAA estimates the following costs to comply with this proposed AD:

ESTIMATED COSTS

Action	Labor cost	Parts cost	Cost per product	Cost on U.S. operators
Review mixer unit component log or equivalent record.	1 work-hour × $85 per hour = $85	$0	$85	$1,105

The FAA estimates the following costs to do any necessary log entry or replacement that would be required based on the results of the proposed mixer unit component log or equivalent record review. The FAA has no way of determining the number of helicopters that might need this log entry or replacement:

ON-CONDITION COSTS

Action	Labor cost	Parts cost	Cost per product
Add arm assembly entry and determine remaining life	1 work-hour × $85 per hour = $85	$0	$85
Replace arm assembly	9 work-hours × $85 per hour = $765	5,035	5,800

According to the manufacturer, some of the costs of this proposed AD may be covered under warranty, thereby reducing the cost impact on affected individuals. The FAA does not control warranty coverage for affected individuals. As a result, the FAA has included all costs in the cost estimate.

Authority for This Rulemaking

Title 49 of the United States Code specifies the FAA's authority to issue rules on aviation safety. Subtitle I, section 106, describes the authority of the FAA Administrator. Subtitle VII: Aviation Programs, describes in more detail the scope of the Agency's authority.

The FAA is issuing this rulemaking under the authority described in Subtitle VII, Part A, Subpart III, Section 44701: General requirements. Under that section, Congress charges the FAA with promoting safe flight of civil aircraft in air commerce by prescribing regulations for practices, methods, and procedures the Administrator finds necessary for safety in air commerce. This regulation is within the scope of that authority because it addresses an unsafe condition that is likely to exist or develop on products identified in this rulemaking action.

Regulatory Findings

The FAA determined that this proposed AD would not have federalism implications under Executive Order 13132. This proposed AD would not have a substantial direct effect on the States, on the relationship between the national Government and the States, or on the distribution of power and responsibilities among the various levels of government.

For the reasons discussed above, I certify this proposed regulation:

(1) Is not a ''significant regulatory action'' under Executive Order 12866,

(2) Will not affect intrastate aviation in Alaska, and

(3) Will not have a significant economic impact, positive or negative, on a substantial number of small entities under the criteria of the Regulatory Flexibility Act.

List of Subjects in 14 CFR Part 39

Air transportation, Aircraft, Aviation safety, Incorporation by reference, Safety.

The Proposed Amendment

Accordingly, under the authority delegated to me by the Administrator, the FAA proposes to amend 14 CFR part 39 as follows:

PART 39—AIRWORTHINESS DIRECTIVES

■ 1. The authority citation for part 39 continues to read as follows:

Authority: 49 U.S.C. 106(g), 40113, 44701.

§ 39.13 [Amended]

■ 2. The FAA amends § 39.13 by adding the following new airworthiness directive (AD):

Sikorsky Aircraft and Sikorsky Aircraft Corporation: Docket No. FAA–2020–0920; Project Identifier AD–2020–00662–R.

(a) Comments Due Date

The FAA must receive comments by December 10, 2020.

(b) Affected ADs

None.

(c) Applicability

This AD applies to Sikorsky Aircraft Model S–61L, S–61N, S–61NM, and S–61R helicopters and Sikorsky Aircraft Corporation

Model S–61A, S–61D, S–61E, and S–61V helicopters, certificated in any category including restricted, with an arm assembly, part number S6140–62614–009, installed.

(d) Subject

Joint Aircraft System Component (JASC) Code 6720, Tail Rotor Control System.

(e) Unsafe Condition

This AD was prompted by the manufacturer determining that there may be arm assemblies in service with 15,000 or more hours time-in-service (TIS), which exceeds the life limit for this component. The FAA is issuing this AD to prevent reduced or loss of tail rotor control. This unsafe condition, if not addressed, could result in reduced control of the helicopter.

(f) Compliance

Comply with this AD within the compliance times specified, unless already done.

(g) Required Action

(1) Within 90 days after the effective date of this AD, review the mixer unit component log card or equivalent record to determine if the affected arm assembly is entered with the appropriate 15,000 hours TIS life limit.

(2) If the affected arm assembly is not included on the mixer unit component log card or equivalent record, within 90 days after the effective date of this AD, add the arm assembly entry to the mixer unit component log card or equivalent record and determine the remaining life of the arm assembly using the Accomplishment Instructions, Section 3.A.(3) of Sikorsky S–61 Helicopter Alert Service Bulletin (ASB) 61B40–11, Basic Issue, dated March 2, 2020 (''the ASB'').

(3) If, based on the review required by paragraphs (g)(1) and (2) of this AD, the arm assembly has accumulated 15,000 or more hours TIS, before further flight, remove the arm assembly from service. If the hours TIS for the affected arm assembly cannot be determined, before further flight, remove the affected arm assembly from service.

(4) For arm assemblies that have not accumulated 15,000 or more hours TIS, thereafter, continue to determine the remaining life of the arm assembly and remove the arm assembly from service before it accumulates 15,000 hours TIS.

(h) Credit for Previous Actions

You may take credit for adding the arm assembly entry to the mixer unit component log card or equivalent record and determining the remaining life of the arm assembly required by paragraphs (g)(1) and (2) of this AD if you performed these actions before the effective date of this AD using Sikorsky S–61 Helicopter ASB 61B General–1, Revision AA, dated February 24, 2020.

(i) Special Flight Permit

Special flight permits, as described in Section 21.197 and Section 21.199 of the Federal Aviation Regulations (14 CFR 21.197 and 21.199), are subject to the requirements of paragraph (g)(3) of this AD. Operators who are prohibited from further flight due to exceeding the life limit in paragraph (g)(3) of this AD, may only perform a maintenance check or a one-time ferry flight to a location where the affected arm assembly can be removed from service. This ferry flight must be performed with only essential flight crew.

(j) Alternative Methods of Compliance (AMOCs)

(1) The Manager, Boston ACO Branch, FAA, has the authority to approve AMOCs for this AD, if requested using the procedures found in 14 CFR 39.19. In accordance with 14 CFR 39.19, send your request to your principal inspector or local Flight Standards District Office, as appropriate. If sending information directly to the manager of the certification office, send it to the attention of the person identified in paragraph (k)(1) of this AD.

(2) Before using any approved AMOC, notify your appropriate principal inspector, or lacking a principal inspector, the manager of the local flight standards district office/certificate holding district office.

(k) Related Information

(1) For more information about this AD, contact Neil Doh, Aerospace Engineer, Boston ACO Branch, FAA, 1200 District Avenue, Burlington, MA 01803; phone: 781–238–7757; fax: 781–238–7199; email: *neil.doh@faa.gov.*

(2) For service information identified in this AD, contact Sikorsky Aircraft Corporation, 6900 Main Street, P.O. Box 9729, Stratford, CT 06615; phone: 203–386–4000. You may view this referenced service information at the FAA, Office of the Regional Counsel, Southwest Region, 10101 Hillwood Pkwy., Room 6N–321, Fort Worth, TX 76177. For information on the availability of this material at the FAA, call 817–222–5110.

Issued on October 14, 2020.

Lance T. Gant,

Director, Compliance & Airworthiness Division, Aircraft Certification Service.

[FR Doc. 2020–23466 Filed 10–23–20; 8:45 am]

BILLING CODE 4910–13–P

DEPARTMENT OF TRANSPORTATION

Federal Aviation Administration

14 CFR Part 39

[Docket No. FAA–2020–0967; Product Identifier 2018–SW–013–AD]

RIN 2120–AA64

Airworthiness Directives; Airbus Helicopters Deutschland GmbH Helicopters

AGENCY: Federal Aviation Administration (FAA), DOT.

ACTION: Notice of proposed rulemaking (NPRM).

SUMMARY: The FAA proposes to adopt a new airworthiness directive (AD) for Airbus Helicopters Deutschland GmbH Model MBB–BK117 A–1, MBB–BK117 A–3, MBB–BK117 A–4, MBB–BK117 B–1, MBB–BK117 B–2, MBB–BK117 C–1, and MBB–BK117 C–2 helicopters. This proposed AD would require inspecting the tail gearbox (TGB) bellcrank attachment arm (arm) for a crack. This proposed AD was prompted by a report of a cracked TGB arm. The actions of this proposed AD are intended to address an unsafe condition on these products.

DATES: The FAA must receive comments on this proposed AD by December 10, 2020.

ADDRESSES: You may send comments by any of the following methods:

- *Federal eRulemaking Docket:* Go to *https://www.regulations.gov.* Follow the online instructions for sending your comments electronically.
- *Fax:* 202–493–2251.
- *Mail:* Send comments to the U.S. Department of Transportation, Docket Operations, M–30, West Building Ground Floor, Room W12–140, 1200 New Jersey Avenue SE, Washington, DC 20590–0001.
- *Hand Delivery:* Deliver to the ''Mail'' address between 9 a.m. and 5 p.m., Monday through Friday, except Federal holidays.

Examining the AD Docket

You may examine the AD docket on the internet at *https://www.regulations.gov* by searching for and locating Docket No. FAA–2020–0967; or in person at Docket Operations between 9 a.m. and 5 p.m., Monday through Friday, except Federal holidays. The AD docket contains this proposed AD, the European Aviation Safety Agency (now European Union Aviation Safety Agency) (EASA) AD, any comments received, and other information. The street address for Docket Operations is listed above. Comments will be available in the AD docket shortly after receipt.

For service information identified in this proposed rule, contact Airbus Helicopters, 2701 N Forum Drive, Grand Prairie, TX 75052; telephone 972–641–0000 or 800–232–0323; fax 972–641–3775; or at *https://www.airbus.com/helicopters/services/technical-support.html.* You may view the referenced service information at the FAA, Office of the Regional Counsel, Southwest Region, 10101 Hillwood Pkwy., Room 6N–321, Fort Worth, TX 76177.

FOR FURTHER INFORMATION CONTACT: David Hatfield, Aviation Safety Engineer, Safety Management Section, Rotorcraft Standards Branch, FAA, 10101 Hillwood Pkwy., Fort Worth, TX

76177; telephone 817–222–5110; email *david.hatfield@faa.gov.*

SUPPLEMENTARY INFORMATION:

Comments Invited

The FAA invites you to send any written relevant data, views, or arguments about this proposal. Send your comments to an address listed under **ADDRESSES**. Include ''Docket No. FAA–2020–0967; Product Identifier 2018–SW–013–AD'' at the beginning of your comments. The most helpful comments reference a specific portion of the proposal, explain the reason for any recommended change, and include supporting data. The FAA will consider all comments received by the closing date and may amend this proposal because of those comments.

Except for Confidential Business Information (CBI) as described in the following paragraph, and other information as described in 14 CFR 11.35, the FAA will post all comments received, without change, to *https://www.regulations.gov,* including any personal information you provide. The agency will also post a report summarizing each substantive verbal contact received about this proposal.

Confidential Business Information

CBI is commercial or financial information that is both customarily and actually treated as private by its owner. Under the Freedom of Information Act (FOIA) (5 U.S.C. 552), CBI is exempt from public disclosure. If your comments responsive to this NPRM contain commercial or financial information that is customarily treated as private, that you actually treat as private, and that is relevant or responsive to this NPRM, it is important that you clearly designate the submitted comments as CBI. Please mark each page of your submission containing CBI as ''PROPIN.'' The FAA will treat such marked submissions as confidential under the FOIA, and they will not be placed in the public docket of this NPRM. Submissions containing CBI should be sent to David Hatfield, Aviation Safety Engineer, Safety Management Section, Rotorcraft Standards Branch, FAA, 10101 Hillwood Pkwy., Fort Worth, TX 76177; telephone 817–222–5110; email *david.hatfield@faa.gov.* Any commentary that the FAA receives which is not specifically designated as CBI will be placed in the public docket for this rulemaking.

Discussion

EASA, which is the Technical Agent for the Member States of the European Union, has issued EASA AD No. 2018–0046, dated February 19, 2018, to correct an unsafe condition for Airbus Helicopters Deutschland GmbH (AHD) (formerly Eurocopter Deutschland GmbH, Eurocopter Hubschrauber GmbH, Messerschmitt-Bölkow-Blohm GmbH), Airbus Helicopters Inc. (formerly American Eurocopter LLC) Model MBB–BK117 A–1, MBB–BK117 A–3, MBB–BK117 A–4, MBB–BK117 B–1, MBB–BK117 B–2, MBB–BK117 C–1, and MBB–BK117 C–2 helicopters. The EASA AD advises that a crack was detected on a Model MBB–BK117 A–4 TGB arm and that this condition, if not corrected, could result in disconnection of the arm from the TGB and possible loss of control of the helicopter. To address this unsafe condition, the EASA AD requires an inspection of the TGB arm for a crack and for surface anomalies.

FAA's Determination

These helicopters have been approved by EASA and are approved for operation in the United States. Pursuant to the FAA's bilateral agreement with the European Union, EASA has notified the FAA about the unsafe condition described in its AD. The FAA is proposing this AD after evaluating all known relevant information and determining that an unsafe condition is likely to exist or develop on other products of the same type design.

Related Service Information Under 1 CFR Part 51

The FAA reviewed Airbus Helicopters Alert Service Bulletin (ASB) MBB–BK117 C–2–65A–008 for Model MBB–BK117 C–2 helicopters and ASB MBB–BK117–30A–120 for Model MBB–BK117 A–1, MBB–BK117 A–3, MBB–BK117 A–4, MBB–BK117 B–1, MBB–BK117 B–2, and MBB–BK117 C–1 helicopters, each Revision 0 and dated January 31, 2018. The service information contains procedures for inspecting the TGB arm for a crack and surface anomalies.

This service information is reasonably available because the interested parties have access to it through their normal course of business or by the means identified in the **ADDRESSES** section.

Proposed AD Requirements

This proposed AD would require the following:

- Within 100 hours time-in-service, removing the surface coating from the TGB bellcrank attachment arm and using a 5X or higher power magnifying glass, dye-penetrant inspecting the TGB arm for a crack and for any dent, nick, and scratch.
- If there is a crack, before further flight, replacing the TGB.
- If there is a dent, nick, or scratch, before further flight, removing the surface material up to 0.2 mm using 80-grit abrasive paper and repeating the dye penetrant inspection. If there is a crack or if the damage cannot be removed, before further flight, replacing the TGB.
- If there is no crack and no dent, nick, or scratch, before further flight, finishing the surface with 600-grit or finer abrasive paper.

Differences Between This Proposed AD and the EASA AD

The EASA AD requires operators to contact Airbus Helicopters if there is a crack or if there is damage that cannot be repaired by removing surface material. This proposed AD would require replacing the TGB instead.

Costs of Compliance

The FAA estimates that this proposed AD would affect 177 helicopters of U.S. Registry. Labor rates are estimated at $85 per work-hour. Based on these numbers, the FAA estimates that operators may incur the following costs in order to comply with this proposed AD.

Removing the surface protection and inspecting the TGB arm for a crack would take about 2 work-hours and the cost of materials would be minimal, for an estimated cost of $170 per helicopter and $30,090 for the U.S. fleet.

If required, reworking the TGB arm would take about 1 work-hour and the cost of materials would be minimal, for an estimated cost of $85 per helicopter. Replacing a TGB with a cracked arm would take about 4.5 work-hours and cost about $69,000 for required parts, for an estimated cost of $69,383 per helicopter.

Authority for This Rulemaking

Title 49 of the United States Code specifies the FAA's authority to issue rules on aviation safety. Subtitle I, section 106, describes the authority of the FAA Administrator. Subtitle VII: Aviation Programs, describes in more detail the scope of the Agency's authority.

The FAA is issuing this rulemaking under the authority described in Subtitle VII, Part A, Subpart III, Section 44701: General requirements. Under that section, Congress charges the FAA with promoting safe flight of civil aircraft in air commerce by prescribing regulations for practices, methods, and procedures the Administrator finds necessary for safety in air commerce. This regulation is within the scope of that authority because it addresses an unsafe condition that is likely to exist or

develop on products identified in this rulemaking action.

Regulatory Findings

The FAA determined that this proposed AD would not have federalism implications under Executive Order 13132. This proposed AD would not have a substantial direct effect on the States, on the relationship between the national Government and the States, or on the distribution of power and responsibilities among the various levels of government.

For the reasons discussed, I certify this proposed regulation:

1. Is not a ''significant regulatory action'' under Executive Order 12866,
2. Will not affect intrastate aviation in Alaska, and
3. Will not have a significant economic impact, positive or negative, on a substantial number of small entities under the criteria of the Regulatory Flexibility Act.

List of Subjects in 14 CFR Part 39

Air transportation, Aircraft, Aviation safety, Incorporation by reference, Safety.

The Proposed Amendment

Accordingly, under the authority delegated to me by the Administrator, the FAA proposes to amend 14 CFR part 39 as follows:

PART 39—AIRWORTHINESS DIRECTIVES

■ 1. The authority citation for part 39 continues to read as follows:

Authority: 49 U.S.C. 106(g), 40113, 44701.

§ 39.13 [Amended]

■ 2. The FAA amends § 39.13 by adding the following new airworthiness directive:

Airbus Helicopters Deutschland GmbH: Docket No. FAA–2020–0967; Product Identifier 2018–SW–013–AD.

(a) Applicability

This airworthiness directive (AD) applies to Airbus Helicopters Deutschland GmbH Model MBB–BK117 A–1, MBB–BK117 A–3, MBB–BK117 A–4, MBB–BK117 B–1, MBB–BK117 B–2, MBB–BK117 C–1, and MBB–BK117 C–2 helicopters, certificated in any category.

(b) Unsafe Condition

This AD defines the unsafe condition as a crack in a tail gearbox (TGB) bellcrank attachment arm. This condition could result in disconnection of the bellcrank attachment arm from the TGB and subsequent loss of control of the helicopter.

(c) Comments Due Date

The FAA must receive comments by December 10, 2020.

(d) Compliance

You are responsible for performing each action required by this AD within the specified compliance time unless it has already been accomplished prior to that time.

(e) Required Actions

Within 100 hours time-in-service:

(1) Remove the surface coating from the TGB bellcrank attachment arm and using a 5X or higher power magnifying glass, dye-penetrant inspect the TGB arm for a crack and for any dent, nick, and scratch in the area shown in Figure 1 of Airbus Helicopters Alert Service Bulletin (ASB) MBB–BK117 C–2–65A–008 or ASB MBB–BK117–30A–120, each Revision 0 and dated January 31, 2018, as applicable to your model helicopter.

(2) If there is a crack, before further flight, replace the TGB.

(3) If there is a dent, a nick, or a scratch, before further flight, remove the surface material up to 0.2 mm using 80-grit abrasive paper and repeat the dye penetrant inspection. If there is a crack or if the damage cannot be removed, before further flight, replace the TGB.

(4) If there is no crack and no dent, nick, or scratch, before further flight, finish the surface with 600-grit or finer abrasive paper.

(f) Special Flight Permits

Special flight permits are prohibited.

(g) Alternative Methods of Compliance (AMOCs)

(1) The Manager, Rotorcraft Standards Branch, FAA, may approve AMOCs for this AD. Send your proposal to: David Hatfield, Aviation Safety Engineer, Safety Management Section, Rotorcraft Standards Branch, FAA, 10101 Hillwood Pkwy., Fort Worth, TX 76177; telephone 817–222–5110; email *9-ASW-FTW-AMOC-Requests@faa.gov.*

(2) For operations conducted under a 14 CFR part 119 operating certificate or under 14 CFR part 91, subpart K, the FAA suggests that you notify your principal inspector, or lacking a principal inspector, the manager of the local flight standards district office or certificate holding district office before operating any aircraft complying with this AD through an AMOC.

(h) Additional Information

The subject of this AD is addressed in European Aviation Safety Agency (now European Union Aviation Safety Agency) (EASA) AD No. 2018–0046, dated February 19, 2018. You may view the EASA AD on the internet at *https://www.regulations.gov* in the AD Docket.

(i) Subject

Joint Aircraft Service Component (JASC) Code: 6520, Tail Rotor Gearbox.

Issued on October 19, 2020.

Lance T. Gant,

Director, Compliance & Airworthiness Division, Aircraft Certification Service.

[FR Doc. 2020–23446 Filed 10–23–20; 8:45 am]

BILLING CODE 4910–13–P

DEPARTMENT OF TRANSPORTATION

Federal Aviation Administration

14 CFR Part 39

[Docket No. FAA–2020–0969; Project Identifier MCAI–2020–00853–T]

RIN 2120–AA64

Airworthiness Directives; Airbus SAS Airplanes

AGENCY: Federal Aviation Administration (FAA), DOT.

ACTION: Notice of proposed rulemaking (NPRM).

SUMMARY: The FAA proposes to adopt a new airworthiness directive (AD) for all Airbus SAS Model A350–941 and –1041 airplanes. This proposed AD was prompted by a report that certain retaining rings could cause damage to frame forks, brackets and edge frames, and their surface protection; subsequent investigation showed that the depth of the frame fork spotfacing on structural parts is inadequate to accommodate the retaining ring. This proposed AD would require repetitive inspections of certain areas of each cargo door for damage and corrective action. This proposed AD would also provide an optional terminating modification, as specified in a European Union Aviation Safety Agency (EASA) AD, which will be incorporated by reference. The FAA is proposing this AD to address the unsafe condition on these products.

DATES: The FAA must receive comments on this proposed AD by December 10, 2020.

ADDRESSES: You may send comments, using the procedures found in 14 CFR 11.43 and 11.45, by any of the following methods:

- *Federal eRulemaking Portal:* Go to *https://www.regulations.gov.* Follow the instructions for submitting comments.
- *Fax:* 202–493–2251.
- *Mail:* U.S. Department of Transportation, Docket Operations, M–30, West Building Ground Floor, Room W12–140, 1200 New Jersey Avenue SE, Washington, DC 20590.
- *Hand Delivery:* Deliver to Mail address above between 9 a.m. and 5 p.m., Monday through Friday, except Federal holidays.

For material that will be incorporated by reference (IBR) in this AD, contact the EASA, Konrad-Adenauer-Ufer 3, 50668 Cologne, Germany; telephone +49 221 8999 000; email *ADs@easa.europa.eu;* internet *www.easa.europa.eu.* You may find this IBR material on the EASA website at *https://ad.easa.europa.eu.* You may

view this IBR material at the FAA, Airworthiness Products Section, Operational Safety Branch, 2200 South 216th St., Des Moines, WA. For information on the availability of this material at the FAA, call 206–231–3195. It is also available in the AD docket on the internet at *https://www.regulations.gov* by searching for and locating Docket No. FAA–2020–0969.

Examining the AD Docket

You may examine the AD docket on the internet at *https://www.regulations.gov* by searching for and locating Docket No. FAA–2020–0969; or in person at Docket Operations between 9 a.m. and 5 p.m., Monday through Friday, except Federal holidays. The AD docket contains this NPRM, any comments received, and other information. The street address for Docket Operations is listed above. Comments will be available in the AD docket shortly after receipt.

FOR FURTHER INFORMATION CONTACT: Kathleen Arrigotti, Aerospace Engineer, Large Aircraft Section, International Validation Branch, FAA, 2200 South 216th St., Des Moines, WA 98198; telephone and fax 206–231–3218; email *kathleen.arrigotti@faa.gov.*

SUPPLEMENTARY INFORMATION:

Comments Invited

The FAA invites you to participate in this rulemaking by submitting written comments, data, or views about this proposal. The most helpful comments reference a specific portion of the proposal, explain the reason for any recommended change, and include supporting data. To ensure the docket does not contain duplicate comments, commenters should send only one copy of written comments, or if comments are filed electronically, commenters should submit only one time. Send your comments to an address listed under the **ADDRESSES** section. Include ''Docket No. FAA–2020–0969; Project Identifier MCAI–2020–00853–T'' at the beginning of your comments.

Except for Confidential Business Information (CBI) as described in the following paragraph, and other information as described in 14 CFR 11.35, the FAA will post all comments received, without change, as well as a report summarizing each substantive public contact with FAA personnel concerning this proposed rulemaking. Before acting on this proposal, the FAA will consider all comments received by the closing date for comments. The FAA will consider comments filed after the comment period has closed if it is possible to do so without incurring expense or delay. The FAA may change this NPRM because of those comments.

Confidential Business Information

CBI is commercial or financial information that is both customarily and actually treated as private by its owner. Under the Freedom of Information Act (FOIA) (5 U.S.C. 552), CBI is exempt from public disclosure. If your comments responsive to this NPRM contain commercial or financial information that is customarily treated as private, that you actually treat as private, and that is relevant or responsive to this NPRM, it is important that you clearly designate the submitted comments as CBI. Please mark each page of your submission containing CBI as ''PROPIN.'' The FAA will treat such marked submissions as confidential under the FOIA, and they will not be placed in the public docket of this NPRM. Submissions containing CBI should be sent to Kathleen Arrigotti, Aerospace Engineer, Large Aircraft Section, International Validation Branch, FAA, 2200 South 216th St., Des Moines, WA 98198; telephone and fax 206–231–3218; email *kathleen.arrigotti@faa.gov.* Any commentary that the FAA receives which is not specifically designated as CBI will be placed in the public docket for this rulemaking.

Discussion

The EASA, which is the Technical Agent for the Member States of the European Union, has issued EASA AD 2020–0144, dated June 29, 2020 (''EASA AD 2020–0144'') (also referred to as the Mandatory Continuing Airworthiness Information, or ''the MCAI''), to correct an unsafe condition for all Airbus SAS Model A350–941 and –1041 airplanes.

This proposed AD was prompted by a report that certain retaining rings could cause damage to frame forks, brackets and edge frames, and their surface protection; subsequent investigation showed that the depth of the frame fork spotfacing on structural parts is inadequate to accommodate the retaining ring. The FAA is proposing this AD to address inadequate frame fork spotfacing depth for the retaining rings, which could reduce the structural integrity of the airplane. See the MCAI for additional background information.

Related IBR Material Under 1 CFR Part 51

EASA AD 2020–0144 describes procedures for repetitive inspections of the edge frames, brackets, frame forks, and the access cover on the internal side of each cargo door for damage (including cracks and corrosion) and corrective actions. Corrective actions include repair or rework. EASA AD 2020–0144 also describes procedures for an optional modification of each affected cargo door, which terminates the repetitive inspections. This material is reasonably available because the interested parties have access to it through their normal course of business or by the means identified in the **ADDRESSES** section.

FAA's Determination and Requirements of This Proposed AD

This product has been approved by the aviation authority of another country, and is approved for operation in the United States. Pursuant to the FAA's bilateral agreement with the State of Design Authority, the FAA has been notified of the unsafe condition described in the MCAI referenced above. The FAA is proposing this AD because the FAA evaluated all the relevant information and determined the unsafe condition described previously is likely to exist or develop in other products of the same type design.

Proposed AD Requirements

This proposed AD would require accomplishing the actions specified in EASA AD 2020–0144 described previously, as incorporated by reference, except for any differences identified as exceptions in the regulatory text of this AD.

Explanation of Required Compliance Information

In the FAA's ongoing efforts to improve the efficiency of the AD process, the FAA initially worked with Airbus and EASA to develop a process to use certain EASA ADs as the primary source of information for compliance with requirements for corresponding FAA ADs. The FAA has since coordinated with other manufacturers and civil aviation authorities (CAAs) to use this process. As a result, EASA AD 2020–0144 will be incorporated by reference in the FAA final rule. This proposed AD would, therefore, require compliance with EASA AD 2020–0144 in its entirety, through that incorporation, except for any differences identified as exceptions in the regulatory text of this proposed AD. Using common terms that are the same as the heading of a particular section in the EASA AD does not mean that operators need comply only with that section. For example, where the AD requirement refers to ''all required actions and compliance times,'' compliance with this AD requirement is

not limited to the section titled ''Required Action(s) and Compliance Time(s)'' in the EASA AD. Service information specified in EASA AD 2020–0144 that is required for compliance with EASA AD 2020–0144 will be available on the internet at *https://www.regulations.gov* by searching for and locating Docket No. FAA–2020–0969 after the FAA final rule is published.

Costs of Compliance

The FAA estimates that this proposed AD affects 13 airplanes of U.S. registry. The FAA estimates the following costs to comply with this proposed AD:

ESTIMATED COSTS FOR REQUIRED ACTIONS

Labor cost	Parts cost	Cost per product	Cost on U.S. operators
24 work-hours × $85 per hour = $2,040	$0	$2,040	$26,520

ESTIMATED COSTS FOR OPTIONAL ACTIONS

Labor cost	Parts cost	Cost per product
9 work-hours × $85 per hour = $765	Up to $8,570	Up to $9,335.

The FAA has received no definitive data on which to base the cost estimates for the on-condition actions specified in this proposed AD.

According to the manufacturer, some or all of the costs of this proposed AD may be covered under warranty, thereby reducing the cost impact on affected individuals. The FAA does not control warranty coverage for affected individuals. As a result, the FAA has included all known costs in the cost estimate.

Authority for This Rulemaking

Title 49 of the United States Code specifies the FAA's authority to issue rules on aviation safety. Subtitle I, section 106, describes the authority of the FAA Administrator. Subtitle VII: Aviation Programs, describes in more detail the scope of the Agency's authority.

The FAA is issuing this rulemaking under the authority described in Subtitle VII, Part A, Subpart III, Section 44701: General requirements. Under that section, Congress charges the FAA with promoting safe flight of civil aircraft in air commerce by prescribing regulations for practices, methods, and procedures the Administrator finds necessary for safety in air commerce. This regulation is within the scope of that authority because it addresses an unsafe condition that is likely to exist or develop on products identified in this rulemaking action.

Regulatory Findings

The FAA determined that this proposed AD would not have federalism implications under Executive Order 13132. This proposed AD would not have a substantial direct effect on the States, on the relationship between the national Government and the States, or on the distribution of power and responsibilities among the various levels of government.

For the reasons discussed above, I certify this proposed regulation:

(1) Is not a ''significant regulatory action'' under Executive Order 12866,

(2) Will not affect intrastate aviation in Alaska, and

(3) Will not have a significant economic impact, positive or negative, on a substantial number of small entities under the criteria of the Regulatory Flexibility Act.

List of Subjects in 14 CFR Part 39

Air transportation, Aircraft, Aviation safety, Incorporation by reference, Safety.

The Proposed Amendment

Accordingly, under the authority delegated to me by the Administrator, the FAA proposes to amend 14 CFR part 39 as follows:

PART 39—AIRWORTHINESS DIRECTIVES

■ 1. The authority citation for part 39 continues to read as follows:

Authority: 49 U.S.C. 106(g), 40113, 44701.

§ 39.13 [Amended]

■ 2. The FAA amends § 39.13 by adding the following new airworthiness directive (AD):

Airbus SAS: Docket No. FAA–2020–0969; Project Identifier MCAI–2020–00853–T.

(a) Comments Due Date

The FAA must receive comments by December 10, 2020.

(b) Affected ADs

None.

(c) Applicability

This AD applies to all Airbus SAS Model A350–941 and –1041 airplanes, certificated in any category.

(d) Subject

Air Transport Association (ATA) of America Code 52, Doors.

(e) Reason

This AD was prompted by a report that certain retaining rings could cause damage to frame forks, brackets and edge frames, and their surface protection; subsequent investigation showed that the depth of the frame fork spotfacing on structural parts is inadequate to accommodate the retaining ring. The FAA is issuing this AD to address inadequate frame fork spotfacing depth for the retaining rings, which could reduce the structural integrity of the airplane.

(f) Compliance

Comply with this AD within the compliance times specified, unless already done.

(g) Requirements

Except as specified in paragraph (h) of this AD: Comply with all required actions and compliance times specified in, and in accordance with, European Union Aviation Safety Agency (EASA) AD 2020–0144, dated June 29, 2020 (''EASA AD 2020–0144'').

(h) Exceptions to EASA AD 2020–0144

(1) Where EASA AD 2020–0144 refers to its effective date, this AD requires using the effective date of this AD.

(2) The ''Remarks'' section of EASA AD 2020–0144 does not apply to this AD.

(i) Other FAA AD Provisions

The following provisions also apply to this AD:

(1) *Alternative Methods of Compliance (AMOCs):* The Manager, Large Aircraft Section, International Validation Branch, FAA, has the authority to approve AMOCs for this AD, if requested using the procedures found in 14 CFR 39.19. In accordance with 14 CFR 39.19, send your request to your principal inspector or responsible Flight

Standards Office, as appropriate. If sending information directly to the Large Aircraft Section, International Validation Branch, send it to the attention of the person identified in paragraph (j)(2) of this AD. Information may be emailed to: *9-AVS-AIR-730-AMOC@faa.gov.* Before using any approved AMOC, notify your appropriate principal inspector, or lacking a principal inspector, the manager of the responsible Flight Standards Office.

(2) *Contacting the Manufacturer:* For any requirement in this AD to obtain instructions from a manufacturer, the instructions must be accomplished using a method approved by the Manager, Large Aircraft Section, International Validation Branch, FAA; or EASA; or Airbus SAS's EASA Design Organization Approval (DOA). If approved by the DOA, the approval must include the DOA-authorized signature.

(3) *Required for Compliance (RC):* For any service information referenced in EASA AD 2020–0144 that contains RC procedures and tests: Except as required by paragraph (i)(2) of this AD, RC procedures and tests must be done to comply with this AD; any procedures or tests that are not identified as RC are recommended. Those procedures and tests that are not identified as RC may be deviated from using accepted methods in accordance with the operator's maintenance or inspection program without obtaining approval of an AMOC, provided the procedures and tests identified as RC can be done and the airplane can be put back in an airworthy condition. Any substitutions or changes to procedures or tests identified as RC require approval of an AMOC.

(j) Related Information

(1) For information about EASA AD 2020–0144, contact the EASA, Konrad-Adenauer-Ufer 3, 50668 Cologne, Germany; telephone +49 221 8999 000; email *ADs@easa.europa.eu;* Internet *www.easa.europa.eu.* You may find this EASA AD on the EASA website at *https://ad.easa.europa.eu.* You may view this material at the FAA, Airworthiness Products Section, Operational Safety Branch, 2200 South 216th St., Des Moines, WA. For information on the availability of this material at the FAA, call 206–231–3195. This material may be found in the AD docket on the internet at *https://www.regulations.gov* by searching for and locating Docket No. FAA–2020–0969.

(2) For more information about this AD, contact Kathleen Arrigotti, Aerospace Engineer, Large Aircraft Section, International Validation Branch, FAA, 2200 South 216th St., Des Moines, WA 98198; telephone and fax 206–231–3218; email *kathleen.arrigotti@faa.gov.*

Issued on October 16, 2020.

Lance T. Gant,

Director, Compliance & Airworthiness Division, Aircraft Certification Service.

[FR Doc. 2020–23372 Filed 10–23–20; 8:45 am]

BILLING CODE 4910–13–P

DEPARTMENT OF ENERGY

Federal Energy Regulatory Commission

18 CFR Part 292

[Docket Nos. RM21–2–000 and RM20–20–000]

Fuel Cell Thermal Energy Output; Bloom Energy Corporation

AGENCY: Federal Energy Regulatory Commission, Department of Energy.

ACTION: Notice of proposed rulemaking.

SUMMARY: In this Notice of Proposed Rulemaking, the Federal Energy Regulatory Commission proposes to amend the definition of useful thermal energy output in its regulations implementing the Public Utility Regulatory Policies Act of 1978 to recognize the technical evolution of cogeneration.

DATES: Comments are due November 25, 2020.

ADDRESSES: Comments, identified by docket number, may be filed electronically at *http://www.ferc.gov* in acceptable native applications and print-to-PDF, but not in scanned or picture format. For those unable to file electronically, comments may be filed by mail or hand-delivery to: Federal Energy Regulatory Commission, Secretary of the Commission, 888 First Street NE, Washington, DC 20426. The Comment Procedures Section of this document contains more detailed filing procedures.

FOR FURTHER INFORMATION CONTACT:

Lawrence R. Greenfield (Legal Information), Office of the General Counsel, Federal Energy Regulatory Commission, 888 First Street NE, Washington, DC 20426, (202) 502–6415, *lawrence.greenfield@ferc.gov*

Helen Shepherd (Technical Information), Office of Energy Market Regulation, Federal Energy Regulatory Commission, 888 First Street NE, Washington, DC 20426, (202) 502–6176, *helen.shepherd@ferc.gov*

Thomas Dautel (Technical Information), Office of Energy Policy and Innovation, Federal Energy Regulatory Commission, 888 First Street NE, Washington, DC 20426, (202) 502–6196, *thomas.dautel@ferc.gov*

SUPPLEMENTARY INFORMATION:

I. Introduction

1. In this Notice of Proposed Rulemaking (NOPR), the Federal Energy Regulatory Commission (Commission) proposes to revise its regulations (PURPA Regulations) [1] implementing sections 201 and 210 of the Public Utility Regulatory Policies Act of 1978 (PURPA) [2] in light of the development of Solid Oxide Fuel Cell systems with integrated natural gas reformation equipment as a technical evolution of cogeneration and in response to a petition for rulemaking submitted by Bloom Energy Corporation (Bloom Energy) asking the Commission to take such action given such development.

2. PURPA was enacted in 1978 as part of a package of legislative proposals intended to reduce the country's dependence on oil and natural gas, which at the time were in short supply and subject to dramatic price increases.[3] PURPA sets forth a framework to encourage the development of cogeneration facilities that make more efficient use of the heat produced both from fossil fuels used in the production of electricity by using that heat for, *e.g.,* industrial purposes, and also from fossil fuels used for, *e.g.,* industrial purposes by using that heat for the production of electricity. As relevant here, as required by PURPA, a cogeneration facility is a qualifying facility (QF) if the Commission determines that the QF meets certain requirements.[4]

3. In enacting PURPA, Congress could not, and did not, predict specific technological developments that would occur in future years, but instead recognized the Commission's discretion by directing the Commission to ''from time to time thereafter revise[ ] such rules as it determines necessary to encourage cogeneration.'' [5] Although in 1978 the predominant form of cogeneration was a more traditional combined heat and power, Congress did not limit the definition of qualifying cogeneration facilities to the particular technologies then in existence. Instead, Congress defined a cogeneration facility in a more open-ended manner, as a facility that produces: (1) Electric energy; and (2) steam or forms of useful energy, such as heat, which are used for industrial, commercial, heating or cooling purpose.[6] Congress thus left it for the Commission to determine the types of facilities that would qualify as cogeneration facilities under the statute.

4. Due to innovation and development in the last decade, Solid Oxide Fuel Cell

[1] 18 CFR part 292.

[2] 16 U.S.C. 796, 824a–3.

[3] *Qualifying Facility Rates and Requirements Implementation Issues Under the Public Utility Regulatory Policies Act of 1978,* Order No. 872, 85 FR 54,638 (Sept. 2, 2020), 172 FERC ¶ 61,041, at P 47 (2020).

[4] 16 U.S.C. 796(18); 18 CFR 292.203(b), 292.205.

[5] 16 U.S.C. 824a–3(a).

[6] 16 U.S.C. 796(18)(A).

systems with integrated natural gas reformation equipment are now a viable option for efficient electric energy cogeneration furthering PURPA's goal of encouraging the innovation and development of cogeneration facilities. Additionally, the industrial applications of hydrogen continue to grow, with distributed production of hydrogen becoming increasingly important.[7] Solid Oxide Fuel Cell systems with integrated natural gas reformation equipment represent ''continuing progress in the development of efficient electricity generating technology'' [8] since the enactment of PURPA. We find that this development constitutes a sufficient change in circumstance since the Commission's PURPA regulations were first promulgated in 1980 [9] to warrant issuing this NOPR.

5. We thus propose to add a new paragraph (4) to § 292.202(h) of its PURPA Regulations to amend the definition of ''[u]seful thermal energy output'' of a topping cycle cogeneration facility to include thermal energy that is used by a Solid Oxide Fuel Cell system with an integrated steam hydrocarbon reformation process for production of fuel for electricity generation. This definition would clarify that the thermal energy produced by a Solid Oxide Fuel Cell that then uses the thermal energy it produces to reform methane and produce hydrogen for electricity generation is useful thermal energy that would enable a facility powered by such fuel cells to be certified as a cogeneration QF.[10] To be clear, this NOPR applies only to Solid Oxide Fuel Cell systems with integrated natural gas reformation that take in natural gas to produce hydrogen and to generate electricity by using steam from the power generation process to reform the natural gas to produce the hydrogen that the Solid Oxide Fuel Cell systems use to generate electricity.

6. We seek comments on these proposed reforms 30 days from the date of publication of the NOPR in the **Federal Register**.

II. Background

7. PURPA was part of a legislative package Congress enacted in 1978 to address the energy crisis then facing the country.[11] As the Supreme Court explained in *FERC* v. *Mississippi,* in passing PURPA Congress was aware that domestic oil production had lagged behind demand, and the country had become increasingly dependent on foreign oil—which could jeopardize the country's economy and undermine its independence.[12] Roughly a third of the nation's electricity was generated using oil and natural gas,[13] and Congress concluded that increased reliance on cogeneration and small power production could significantly contribute to conserving this energy.[14] As recognized by the Supreme Court, Congress passed PURPA to address the consequences of shortages of oil and natural gas (and electric utilities' decreasing efficiency in their generating capacities), which adversely impacted rates to customers and the economy as a whole.[15]

8. Congress enacted PURPA section 210 in 1978 to address the energy crisis by encouraging the development of QFs and thereby reducing the country's demand for traditional fossil fuels.[16] To accomplish this, section 210(a) directed that the Commission ''prescribe, and from time to time thereafter revise, such rules as [the Commission] determines necessary to encourage cogeneration and small power production.'' [17]

9. In 1980, the Commission issued Order No. 70, which promulgated the required rules that, as relevant here, remain in effect today.[18] Order No. 70 established the ''criteria and procedures by which small power producers and cogeneration facilities can obtain qualifying status to receive the rate benefits and exemptions'' contained in section 210 of PURPA.[19] As relevant here, the Commission established criteria for a cogeneration QF, a facility that, as required by the statute, ''produces electric energy as well as steam or forms of useful energy (such as heat) which are used for industrial, commercial, heating or cooling purposes.'' [20]

10. In 2005, Congress passed the Energy Policy Act of 2005 (EPAct 2005).[21] Pursuant to section 210 of PURPA, as modified by section 1253 of EPAct 2005, the Commission established regulations to ensure that new cogeneration QFs are using their thermal output in a productive and beneficial manner; that the electrical, thermal, chemical and mechanical output of any new cogeneration QFs are used fundamentally for industrial, commercial, residential or institutional purposes; and that there is continuing progress in the development of efficient electric energy generating technology.[22] In determining whether the thermal output is used in a ''productive and beneficial manner,'' the Commission stated it would consider factors such as whether the product produced by the thermal energy is needed and whether there is a market for the product.[23]

11. Unlike more traditional electric generation that relies on combustion of fossil fuels to produce electric energy, fuel cells convert the chemical energy in hydrogen to electric energy without combustion. This conversion has been characterized as a significant improvement in the efficiency of electric generation.[24] More specifically, hydrogen fuel enters the anode side of the fuel cell. Simultaneously, ambient air enters the cathode side of the fuel cell. The hydrogen fuel on the anode

[7] Today almost all the hydrogen produced in the United States is used for refining petroleum, treating metals, producing fertilizer, and processing foods, as the use of hydrogen as a fuel source for energy generation is currently limited by lack of infrastructure for hydrogen distribution and delivery. U.S. Department of Energy, Alternative Fuels Data Center, *Hydrogen Production and Distribution* (Oct 2020), *https://afdc.energy.gov/fuels/hydrogen_production.html#:~:text=Natural%20Gas%20Reforming%2FGasification%3A%20Synthesis,water%20to%20produce%20additional%20hydrogen.* Thus, using the hydrogen, in this case for electricity generation, where it is produced represents an efficient use of that hydrogen.

[8] 16 U.S.C. 824a–3(n)(1)(A)(iii).

[9] *Small Power Production and Cogeneration Facilities—Qualifying Status,* Order No. 70, FERC Stats. & Regs. ¶ 30,134 (cross-referenced at 10 FERC ¶ 61,230), *orders on reh'g,* Order No. 70–A, FERC Stats. & Regs. ¶ 30,159 (cross-referenced at 11 FERC ¶ 61,119), *order on reh'g,* Order No. 70–B, FERC Stats. & Regs. ¶ 30,176 (cross-referenced at 12 FERC ¶ 61,128), *order on reh'g,* FERC Stats. & Regs. ¶ 30,192 (1980) (cross-referenced at 12 FERC ¶ 61,306), *amending regulations,* Order No. 70–D, FERC Stats. & Regs. ¶ 30,234 (cross-referenced at 14 FERC ¶ 61,076), *amending regulations,* Order No. 70–E, FERC Stats. & Regs. ¶ 30,274 (1981) (cross-referenced at 15 FERC ¶ 61,281).

[10] There are different types of fuel cells, classified primarily by the kind of electrolyte used, with different kinds of chemical reactions. The type of chemical reaction determines the temperature range of operation, and other factors relating to the suitability of applications. Bloom Energy Petition at 8.

[11] *See* Public Law 95–617, 92 Stat. 3117. In addition to PURPA, that legislative package included: The Energy Tax Act of 1978, Public Law 95–618, 92 Stat. 3174; the National Energy Conservation Policy Act, Public Law 95–619, 92 Stat. 3206; the Powerplant and Industrial Fuel Use Act of 1978, Public Law 95–620, 92 Stat. 3289; and the Natural Gas Policy Act of 1978, Public Law 95–621, 92 Stat. 3351.

[12] *FERC* v. *Miss.,* 456 U.S. 742, 756 (1982).

[13] *Id.* at 745.

[14] *Id.* at 757.

[15] *Id.* at 745–46.

[16] *Id.* at 750.

[17] 16 U.S.C. 824a–3(a).

[18] Order No. 70, FERC Stats. & Regs. ¶ 30,134.

[19] *Id.* at 30,933.

[20] 16 U.S.C. 796(18); *accord* 18 CFR 292.202(c).

[21] Public Law 109–58, 119 Stat. 594, 969–70, as implemented in *Revised Regulations Governing Small Power Production and Cogeneration Facilities,* Order No. 671, FERC Stats. & Regs. ¶ 31,203 (cross-referenced at 114 FERC ¶ 61,102), *order on reh'g,* Order No. 671–A, FERC Stats. & Regs. ¶ 31,219 (2006) (cross-referenced at 115 FERC ¶ 61,225).

[22] 16 U.S.C. 824–3(n)(1)(A)(iii).

[23] Order No. 671, FERC Stats. & Regs. ¶ 31,203 at P 17. Here, the relevant product would be hydrogen.

[24] Bloom Energy Petition at 8.

attracts oxygen ions from the cathode. In a Solid Oxide Fuel Cell system with integrated natural gas reformation equipment, the resulting electrochemical reaction provides electricity, plus heat and steam that is used to reform natural gas on-site to produce the hydrogen fuel to fuel the cell.[25]

12. If the natural gas reformation equipment were instead located offsite, then waste heat (in the form of steam) from the electricity production by the Solid Oxide Fuel Cell would not be available to aid the reformation process to fuel the cell. In this offsite reformation scenario, we would expect the external reformation process to require additional natural gas to be burned to create steam so that the remainder of the input natural gas could be reformed into hydrogen.[26] This would be inefficient, and inconsistent with Congress's goal in enacting PURPA, as discussed above.

13. Stated another way, integrating the natural gas reformation process into a Solid Oxide Fuel Cell generating facility as described in this NOPR[27] results in significant ''progress in the development of efficient electric energy generating technology.''[28]

III. Commission Proposal

14. As discussed above, the statutory definition of cogeneration facilities requires that a cogeneration facility produce ''(i) electric energy, and (ii) steam or forms of useful energy (such as heat) which are used for industrial, commercial, heating or cooling purposes. . . .''[29] This definition provides for steam or other forms of useful energy to be used for, *e.g.,* an industrial purpose. The creation by a Solid Oxide Fuel Cell system with an integrated natural gas reformation process of a commercially valuable fuel as described in this NOPR fits within this definition. Consistent with the PURPA regulations, Solid Oxide Fuel Cell systems with integrated natural gas reformation equipment produce two forms of energy: Electricity; and the heat/steam (thermal energy) used to create the hydrogen (a chemical energy).

15. Currently, the Commission's PURPA regulations provide that a topping-cycle cogeneration facility is a cogeneration facility in which the energy input to the facility is first used to produce useful power output and at least some of the reject heat from the power production process is then used to provide useful thermal energy.[30]

16. Solid Oxide Fuel Cell systems with integrated natural gas reformation equipment convert the chemical energy within natural gas into electricity using a steam-methane reformation process,[31] which converts the natural gas input to hydrogen, which then reacts with oxygen in the fuel cell to produce electricity. The by-product of the fuel cell's production of electricity is heat and steam, some of which is used in the steam-methane reformation process to convert more methane into hydrogen, which the fuel cells use, in combination with oxygen from the air, to produce electricity.

17. A cogeneration QF is one that ''produces electric energy as well as steam or forms of useful energy (such as heat) which are used for industrial, commercial, heating or cooling purposes.''[32] Consistent with these regulations, Solid Oxide Fuel Cell systems with integrated natural gas reformation equipment generate two forms of useful energy—electricity, and heat/steam (thermal energy) that is used to produce hydrogen (a chemical energy). Commission regulations provide three categories of useful thermal output of a topping-cycle cogenerator. They are thermal energy: (1) That is ''made available to an industrial or commercial process . . .; (2) that is used in a heating application . . .; or (3) that is used in a space cooling application .''[33] We propose to amend our regulations to provide that the production of heat/steam by a Solid Oxide Fuel Cell system for use in an integrated natural gas reformation process to produce hydrogen is an industrial process that, as described in this NOPR, yields a ''useful thermal energy output'' that entitles such a system to be considered a topping cycle cogeneration facility that qualifies, subject to meeting the other relevant requirements,[34] to be a QF. The recent technological advances in utilizing the thermal energy from a Solid Oxide Fuel Cell in an integrated steam hydrocarbon reformation process were not known or anticipated when the Commission adopted its original definitions for useful thermal energy, but that fact should not stand in the way of the Commission now recognizing such advances and responding accordingly.[35]

18. In sum, recognizing technological advancements over the past 40 years and Congress's commitment to ''continuing progress in the development of efficient electric energy generating technology,''[36] and in light of the development and commercialization of Solid Oxide Fuel Cell systems with integrated natural gas reformation equipment since the original adoption of the PURPA regulations, we propose to amend § 292.202(h) of the PURPA Regulations by adding a new paragraph to provide that useful thermal energy output includes the thermal energy ''that is used by a solid oxide fuel cell system with an integrated steam hydrocarbon reformation process for production of fuel for electricity generation.''

19. In proposing this change to its regulations, the Commission does not propose to revise § 292.205(d) of the PURPA Regulations, which establishes additional criteria for new cogeneration facilities seeking to sell electric energy pursuant to PURPA section 210.[37] The Commission proposes that any new cogeneration facility that is a solid oxide fuel cell system with an integrated steam hydrocarbon reformation process would be required to satisfy the existing

[25] *Id.*

[26] Furthermore, as hydrogen is frequently compressed or liquified for shipment to the point of consumption, yet more energy would be needed for these activities. *Id.* at 8 & App. B.

[27] *See supra* P 5 (emphasizing the limited scope of the proposed change in the regulations).

[28] Bloom Energy Petition at 1, 3, 7, 16 (citing 16 U.S.C. 824a–3(n)(1)(A)(iii)).

[29] 16 U.S.C. 796(18)(A).

[30] 18 CFR 292.202(d).

[31] Industrial gas manufacturers also produce hydrogen from natural gas using a steam-methane reformation process, but must produce their own steam, usually through combustion of some of the input natural gas. Because the buyers of the resulting hydrogen are usually remote from the industrial gas manufacturer, this hydrogen is either compressed or liquified in order to transport the hydrogen to the end user. Integrating the natural gas steam reformation process into a Solid Oxide Fuel Cell system increases efficiency and avoids the energy loss of external reformation, and compression or liquefaction for surface transportation. Bloom Energy Petition at 8 & App. B.

[32] 16 U.S.C. 796(18).

[33] 18 CFR 292.202(h).

[34] *See* 18 CFR 292.203(b), 292.205.

[35] We recognize that in *EG&G, Inc.,* 16 FERC ¶ 61,060, at 61,104 (1981), the Commission stated that, for cogeneration, ''the use of thermal energy must be completely independent of the power production process.'' That order did not involve fuel cells and in any event was issued under the regulations then effective, *see id.* at 61,103–04, which we propose to revise in this NOPR, to now allow—for a Solid Oxide Fuel Cell system with an integrated natural gas reformation process—the production of hydrogen to be considered an industrial process that yields a ''useful thermal energy output'' that entitles such a system to be considered a topping cycle cogeneration facility that qualifies, subject to meeting the other relevant requirements, as a QF.

[36] 16 U.S.C. 824a–3(n)(1)(A)(iii).

[37] 18 CFR 292.205(d); *see also* 18 CFR 292.205(d)(4) (''For purposes of paragraphs (d)(1) and (2) of this section, a new cogeneration facility of 5 MW or smaller will be presumed to satisfy the requirements of those paragraphs.''). That presumption, we note, is a rebuttable presumption, though. *Revised Regulations Governing Small Power Production and Cogeneration Facilities,* Order No. 671, 114 FERC ¶ 61,102, at PP 26, 60, *order on reh'g,* Order No. 671–A, 115 FERC ¶ 61,225 (2006).

criteria of § 292.205(d) of the PURPA Regulations if it seeks to make sales of electric energy pursuant to PURPA section 210.

IV. Information Collection Statement

20. The Paperwork Reduction Act [38] requires each federal agency to seek and obtain the Office of Management and Budget's (OMB) approval before undertaking a collection of information (including reporting, record keeping, and public disclosure requirements) directed to ten or more persons or contained in a rule of general applicability. OMB regulations require approval of certain information collection requirements contemplated by proposed rules (including deletion, revision, or implementation of new requirements).[39] Upon approval of a collection of information, OMB will assign an OMB control number and an expiration date. Respondents subject to the filing requirements of a rule will not be penalized for failing to respond to the collection of information unless the collection of information displays a valid OMB control number.

Public Reporting Burden: In this NOPR, the Commission proposes to revise its regulations implementing PURPA. The proposed change is to provide that useful thermal energy outputs will now include the thermal energy ''that is used by a solid oxide fuel cell system with an integrated steam hydrocarbon reformation process for production of fuel for electricity generation.'' The estimated changes to the burden and cost of the information collection affected by this NOPR, *i.e.,* the FERC Form No. 556, follow.[40]

FERC–556, Certification of Qualifying Facility Status for a Small Power Production or Cogeneration Facility, Proposed Changes Due to NOPR in Docket Nos. RM21–2–000 and RM20–20–000 [41]

Facility type	Filing tpe	Number of respondents (1)	Annual number of responses per respondent (2)	Total number of responses (1) * (2) = (3)	Average burden hours & cost per response (4)	Total annual burden hours & total annual cost (3) * (4) = (5)	Annual cost per respondent ($) (5) ÷ (1)
Cogeneration Facility ≤1 MW [42]	Self-certification	5	[43] 600	3,000	1.5 hrs.; $124.50.	4,500 hrs.; $373,500.	$74,700
Cogeneration Facility >1 MW	Self-certification	5	20	100	1.5 hrs.; $124.50.	1,500 hrs.; $12,450.	2,490
Cogeneration Facility >1 MW	Application for FERC certification.	5	1	5	50 hrs.; $4,150	250 hrs.; $20,750.	4,150
FERC–556, Total additional burden and cost due to NOPR in RM21–2 and RM20–20.		15		3,105		6,250 hrs.; $406,700.	

Title: FERC–556, Certification of Qualifying Facility (QF) Status for a Small Power Production or Cogeneration Facility.

Action: Revisions to existing information collection FERC–556.[44]

OMB Control No.: 1902–0075.

Respondents: Facilities that are self-certifying their status as a cogenerator or that are submitting an application for Commission certification of their status as a cogenerator; and electric utilities, state regulatory authorities, or other entities submitting comments on, or protests to, the self-certification or application for Commission certification.

Frequency of Information: Ongoing.

Necessity of Information: The Commission proposes the changes in this NOPR in order to revise its implementation of PURPA in light of technological advancements in electric generation since the enactment of PURPA in 1978.

Internal Review: The Commission has reviewed the proposed changes and has determined that such changes are necessary. These requirements conform to the Commission's ongoing need for efficient information collection, communication, and management within the energy industry, in light of technological advancements in electric generation.

Interested persons may obtain information on the reporting requirements by contacting the Federal Energy Regulatory Commission, 888 First Street NE, Washington, DC 20426 [Attention: Ellen Brown, Office of the Executive Director], by email to *DataClearance@ferc.gov,* or by phone (202) 502–8663.

Please send comments concerning the collection of information and the associated burden estimates to: Office of Information and Regulatory Affairs, Office of Management and Budget [Attention: Federal Energy Regulatory Commission Desk Officer]. Due to security concerns, comments should be sent directly to *www.reginfo.gov/public/do/PRAMain.* Comments submitted to OMB should be sent within 30 days of publication of this proposed rule in the **Federal Register** and should refer to FERC–556 (OMB Control No. 1902–0075).

V. Environmental Analysis

21. The Commission is required to prepare an Environmental Assessment or an Environmental Impact Statement for any action that may have a significant adverse effect on the human

[38] 44 U.S.C. 3501–21.

[39] *See* 5 CFR 1320.11.

[40] The changes to the FERC Form No. 556, adopted in Order No. 872 are pending OMB review (under ICR #202006–1902–004). Those changes are separate and are not addressed in this NOPR.

[41] The figures in this table reflect estimated changes to the current OMB-approved inventory for the FERC Form No. 556 (approved by OMB on November 18, 2019). This table only reflects cogeneration facilities because small power production facilities will not be affected by the proposed changes in the NOPR. The Commission staff believes that the industry is similarly situated to the Commission in terms of wages and benefits. Therefore, cost estimates are based on FERC's 2020 average hourly wage (and benefits) of $83.00/hour.

[42] Such facilities are not required to file but have the choice whether to do so.

[43] Bloom Energy has stated they have 600 facilities, with an average size of 0.6 MW, *see* Bloom Energy Petition at 14, which, if they all were in fact to file, would result in as many as 600 self-certifications of below 1 MW facilities. The Commission accordingly will adopt a conservative approach and estimate 600 such responses over the course of a year, which is especially conservative given that the Commission's regulations do not require below-1 MW facilities to submit self-certifications.

[44] The FERC Form No. 556 is not being revised, but respondents with Solid Oxide Fuel Cell systems with integrated natural gas reformation equipment who are self-certifying or requesting Commission certification as a cogenerator will use the FERC Form No. 556. On page 8, item 6a of the FERC Form No. 556, those respondents should indicate ''Fossil fuel, natural gas (not waste).''

environment.[45] Whether and how the revisions proposed here, however, would affect QF development and the environment is speculative.

22. The proposed changes to the PURPA Regulations do not authorize or fund particular generation that may happen to qualify as QFs, nor do they license or issue permits for operation of generation that may happen to qualify as QFs; such generation can be built and operated independent of, *i.e.,* without, QF certification. They do not authorize or prohibit a generator's use of any particular technologies or fuels, nor do they mandate or limit where QFs should or should not be built. They do not exempt QFs from any Federal, state or local environmental, siting, or other similar laws or regulatory requirements. Given these facts any environmental impact analysis of the revisions proposed here would be speculative and not meaningfully inform the Commission or the public of the revisions' impact on QF development or, correspondingly, of any associated potential impacts on the environment; there are, in short, no reasonably foreseeable environmental impacts for the Commission to consider.[46] Moreover, the revisions proposed here would apply only to a limited number of QFs: Solid Oxide Fuel Cell systems with integrated natural gas reformation equipment. Therefore, the Commission will not prepare an environmental document.

VI. Regulatory Flexibility Act Analysis

23. The Regulatory Flexibility Act of 1980 (RFA)[47] generally requires a description and analysis of proposed rules that will have significant economic impact on a substantial number of small entities. In lieu of preparing a regulatory flexibility analysis, an agency may certify that a proposed rule will not have a significant economic impact on a substantial number of small entities.[48]

24. The Small Business Administration's (SBA) Office of Size Standards develops the numerical definition of a small business.[49] The SBA size standard for electric utilities is based on the number of employees, including affiliates.[50] Under SBA's current size standards, the threshold for a small entity (including its affiliates) is 250 employees for cogeneration in the NAICS[51] category:

NAICS Code 221118 for Other Electric Power Generation

25. The Commission does not expect the proposed revision, if adopted, to affect a substantial number of small entities. This proposed rule directly affects only certain QFs, *i.e.,* those that are Solid Oxide Fuel Cell systems with integrated natural gas reformation equipment; this proposed rule is voluntary. That is, this proposed rule expands the types of cogenerators that would be eligible to qualify as QFs to include Solid Oxide Fuel Cell systems with integrated natural gas reformation equipment, but this proposed rule does not require Solid Oxide Fuel Cell systems with integrated natural gas reformation equipment to file for QF certification. The Commission does not anticipate that the number of affected small entities would be substantial, nor does the Commission expect that any additional reporting burden or cost imposed on QFs, regardless of their status as a small or large business, would be significant.[52]

VII. Comment Procedures

26. The Commission invites interested persons to submit comments on the matters and issues proposed in this document to be adopted, including any related matters or alternative proposals that commenters may wish to discuss. Comments are due November 25, 2020. Comments must refer to Docket Nos. RM21–2–000 and RM20–20–000, and must include the commenter's name, the organization the commenter represents, if applicable, and the commenter's address.

27. The Commission encourages comments to be filed electronically via the eFiling link on the Commission's website at *http://www.ferc.gov.* The Commission accepts most standard word processing formats. Documents created electronically using word processing software should be filed in native applications or print-to-PDF format and not in a scanned format. Commenters filing electronically do not need to make a paper filing.

28. Commenters that are not able to file comments electronically must send an original of their comments to: Federal Energy Regulatory Commission, Secretary of the Commission, 888 First Street NE, Washington, DC 20426.

29. All comments will be placed in the Commission's public files and may be viewed, printed, or downloaded remotely as described in the Document Availability section below. Commenters on this proposal are not required to serve copies of their comments on other commenters.

VIII. Document Availability

30. In addition to publishing the full text of this document in the **Federal Register**, the Commission provides all interested persons an opportunity to view and/or print the contents of this document via the internet through the Commission's Home Page (*http://www.ferc.gov*). At this time, the Commission has suspended access to the Commission's Public Reference Room due to the President's March 13, 2020 proclamation declaring a National Emergency concerning the Novel Coronavirus Disease (COVID–19).

31. From the Commission's Home Page on the internet, this information is available on eLibrary. The full text of this document is available on eLibrary in PDF and Microsoft Word format for viewing, printing, and/or downloading. To access this document in eLibrary, type the docket number excluding the last three digits of this document in the docket number field.

32. User assistance is available for eLibrary and the Commission's website during normal business hours from the Commission's Online Support at 202–502–6652 (toll free at 1–866–208–3676) or email at *ferconlinesupport@ferc.gov,* or the Public Reference Room at (202) 502–8371. Email the Public Reference Room at *public.referenceroom@ferc.gov.*

List of Subjects in 18 CFR Part 292

Electric power plants, Electric utilities, Reporting and recordkeeping requirements.

By direction of the Commission.

Issued: October 15, 2020.

Nathaniel J. Davis, Sr.,

Deputy Secretary.

In consideration of the foregoing, the Commission proposes to amend part

[45] *Regulations Implementing National Environmental Policy Act of 1969,* Order No. 486, 52 FR 47,897 (Dec. 17, 1987), FERC Stats. & Regs. Preambles 1986–1990 ¶ 30,783 (1987) (cross-referenced at 41 FERC ¶ 61,284).

[46] While courts have held that NEPA requires ''reasonable forecasting,'' an agency is not required ''to engage in speculative analysis'' or ''to do the impractical, if not enough information is available to permit meaningful consideration.'' *N. Plains Res. Council* v. *Surface Transp. Board,* 668 F.3d 1067, 1078 (9th Cir. 2011).

[47] 5 U.S.C. 601–12.

[48] 5 U.S.C. 605(b).

[49] 13 CFR 121.101.

[50] SBA Final Rule on ''Small Business Size Standards: Utilities,'' 78 FR 77, 343 (Dec. 23, 2013).

[51] The North American Industry Classification System (NAICS) is an industry classification system that Federal statistical agencies use to categorize businesses for the purpose of collecting, analyzing, and publishing statistical data related to the U.S. economy. United States Census Bureau, *North American Industry Classification System, https://www.census.gov/eos/www/naics/* (accessed October 4, 2020).

[52] The average cost per response is estimated to vary from $124.50 to $4,150. The cost per respondent will vary based on the respondent's number of facilities and related requests for self-certification and applications for Commission certification (with an estimated cost ranging from $2,490 to $74,700 per respondent).

292, chapter I, title 18, Code of Federal Regulations, as follows.

PART 292—REGULATIONS UNDER SECTIONS 201 AND 210 OF THE PUBLIC UTILITY REGULATORY POLICIES ACT OF 1978 WITH REGARD TO SMALL POWER PRODUCTION AND COGENERATION

■ 1. The authority citation for part 292 continues to read as follows:

Authority: 16 U.S.C. 791a-825r, 2601–2645; 31 U.S.C. 9701; 42 U.S.C. 7101–7352.

■ 2. Amend § 292.202 by:
■ a. revising paragraphs (h)(2) and (3); and
■ b. adding paragraph (h)(4).

The revisions and addition read as follows:

§ 292.202 Definitions.

* * * * *

(h) * * *

(2) That is used in a heating application (*e.g.,* space heating, domestic hot water heating);

(3) That is used in a space cooling application (*i.e.,* thermal energy used by an absorption chiller); or

(4) That is used by a solid oxide fuel cell system with an integrated steam hydrocarbon reformation process for production of fuel for electricity generation.

* * * * *

[FR Doc. 2020–23282 Filed 10–23–20; 8:45 am]

BILLING CODE 6717–01–P

NATIONAL LABOR RELATIONS BOARD

29 CFR Part 102

RIN 3142–AA17

Representation-Case Procedures: Voter List Contact Information; Absentee Ballots for Employees on Military Leave; Reopening of Comment Period

AGENCY: National Labor Relations Board.

ACTION: Proposed rule; extension of comment period.

SUMMARY: By this Notice of Proposed Rulemaking, the National Labor Relations Board (NLRB) is announcing a reopening of the period to submit comments to the initial comments (or reply comments) to the Notice of Proposed Rulemaking issued in the **Federal Register** on July 29, 2020. On October 5, 2020, the NLRB issued a press release indicating the Board was extending the comment period for replies to initial comments from October 13, 2020 to October 27, 2020.

DATES: The reply comment period for the proposed rule published July 29, 2020, at 85 FR 45553, is reopened. Reply comments to the Notice of Proposed Rulemaking must be received by the Board on or before October 27, 2020.

ADDRESSES:

Internet—Federal eRulemaking Portal. Electronic comments may be submitted through *http://www.regulations.gov.*

Delivery—Comments should be submitted by mail or hand delivery to: Roxanne L. Rothschild, Executive Secretary, National Labor Relations Board, 1015 Half Street SE, Washington, DC 20570–0001. Because of security precautions, the Board continues to experience delays in U.S. mail delivery. You should take this into consideration when preparing to meet the deadline for submitting comments. The Board encourages electronic filing. It is not necessary to send comments if they have been filed electronically with *regulations.gov.* If you send comments, the Board recommends that you confirm receipt of your delivered comments by contacting (202) 273–1940 (this is not a toll-free number). Individuals with hearing impairments may call 1–866–315–6572 (TTY/TDD).

Only comments submitted through *http://www.regulations.gov,* hand delivered, or mailed will be accepted; ex parte communications received by the Board will be made part of the rulemaking record and will be treated as comments only insofar as appropriate. Comments will be available for public inspection at *http://www.regulations.gov* and during normal business hours (8:30 a.m. to 5 p.m. EST) at the above address.

The Board will post, as soon as practicable, all comments received on *http://www.regulations.gov* without making any changes to the comments, including any personal information provided. The website *http://www.regulations.gov* is the Federal eRulemaking portal, and all comments posted there are available and accessible to the public. The Board requests that comments include full citations or internet links to any authority relied upon. The Board cautions commenters not to include personal information such as Social Security numbers, personal addresses, telephone numbers, and email addresses in their comments, as such submitted information will become viewable by the public via the *http://www.regulations.gov* website. It is the commenter's responsibility to safeguard his or her information. Comments submitted through *http://www.regulations.gov* will not include the commenter's email address unless the commenter chooses to include that information as part of his or her comment.

FOR FURTHER INFORMATION CONTACT: Roxanne Rothschild, Executive Secretary, National Labor Relations Board, 1015 Half Street SE, Washington, DC 20570–0001, (202) 273–1940 (this is not a toll-free number), 1–866–315–6572 (TTY/TDD).

SUPPLEMENTARY INFORMATION: The National Labor Relations Board (''NLRB'' or ''Board'') published a Notice of Proposed Rulemaking in the **Federal Register** on July 29, 2020, seeking comments from the public regarding amending the Board's rules and regulations to eliminate the requirement that employers must, as part of the Board's voter list requirement, provide available personal email addresses and available home and personal cellular telephone numbers of all eligible voters. It also proposes an amendment providing for absentee mail ballots for employees who are on military leave.

Dated: October 5, 2020.

Roxanne L. Rothschild,

Executive Secretary.

[FR Doc. 2020–22332 Filed 10–23–20; 8:45 am]

BILLING CODE 7545–01–P

Notices

Federal Register

Vol. 85, No. 207

Monday, October 26, 2020

This section of the FEDERAL REGISTER contains documents other than rules or proposed rules that are applicable to the public. Notices of hearings and investigations, committee meetings, agency decisions and rulings, delegations of authority, filing of petitions and applications and agency statements of organization and functions are examples of documents appearing in this section.

DEPARTMENT OF AGRICULTURE

Animal and Plant Health Inspection Service

[Docket No. APHIS–2020–0033]

Notice of Availability of Assessment of the Newcastle Disease Status of the Cantons of Neuchâtel and Ticino of Switzerland

AGENCY: Animal and Plant Health Inspection Service, USDA.

ACTION: Notice.

SUMMARY: We are advising the public of our intention to reinstate the animal health status of the Cantons of Neuchâtel and Ticino in Switzerland as free of Newcastle disease. This recognition is based on an assessment we have prepared in connection with this action, which we are making available for review and comment.

DATES: We will consider all comments that we receive on or before December 28, 2020.

ADDRESSES: You may submit comments by either of the following methods:

- *Federal eRulemaking Portal:* Go to *http://www.regulations.gov/#!docketDetail;D=APHIS-2020-0033.*
- *Postal Mail/Commercial Delivery:* Send your comment to Docket No. APHIS–2020–0033, Regulatory Analysis and Development, PPD, APHIS, Station 3A–03.8, 4700 River Road unit 118, Riverdale, MD 20737–1238.

Supporting documents and any comments we receive on this docket may be viewed at *http://www.regulations.gov/#docketDetail;D=APHIS-2020-0033* or in our reading room, which is located in room 1620 of the USDA South Building, 14th Street and Independence Avenue SW, Washington, DC. Normal reading room hours are 8 a.m. to 4:30 p.m., Monday through Friday, except holidays. To be sure someone is there to help you, please call (202) 799–7039 before coming.

FOR FURTHER INFORMATION CONTACT: Dr. Rebecca Gordon, Import Risk Analyst, Regionalization Evaluation Services, Strategy & Policy, Veterinary Services, APHIS, USDA, 920 Main Campus Drive, Suite 200, Raleigh, NC 27606; *AskRegionalization@usda.gov*; (919) 855–7741.

SUPPLEMENTARY INFORMATION: The regulations in 9 CFR part 94 govern the importation of animal products into the United States in order to ensure that the products do not introduce or spread diseases or pests of livestock. Section 94.6 contains regulations governing the importation of carcasses, meat, parts or products of carcasses, and eggs (other than hatching eggs) of poultry, game birds, or other birds from areas in which Newcastle disease (ND) is known to exist. The section provides that the Animal and Plant Health Inspection Service (APHIS) will maintain a list on the internet of regions in which ND is not known to exist. It further provides that, should a region be removed from the list due to an outbreak, APHIS will reinstate the region to the list in accordance with the procedures in 9 CFR 92.4.

Section 92.4 provides that after removing disease-free status from all or part of a region, APHIS may reassess the disease situation in that region to determine whether it is necessary to continue import prohibitions or restrictions. When reassessing the region's disease status, APHIS considers the standards of the World Organization for Animal Health for reinstatement of disease-free status, as well as all relevant information obtained through publicly available means or collected by or submitted to APHIS through other means. Prior to removing import prohibitions or restrictions, APHIS makes the information regarding its assessment of the region's disease status available to the public for comment through a notice published in the **Federal Register**.

APHIS previously issued an import alert on November 22, 2017, notifying trade partners that the Canton of Ticino, in Switzerland, which had previously been considered to be a region in which ND is not known to exist, was now affected with ND. APHIS had previously determined that the Canton of Neuchâtel was affected with ND in 2011. In accordance with the regulations in § 94.6, concurrent to these determinations, APHIS placed restrictions on the importation of poultry products for commodities from the two cantons.

APHIS completed a *Report for Reassessment of Cantons Neuchâtel and Ticino in Switzerland as Free of Newcastle Disease* in January 2020. This document presents the results of APHIS' reassessment of the ND status of the Cantons of Neuchâtel and Ticino. As a result of this reassessment, APHIS concludes that Switzerland has effectively controlled and eradicated ND in its domestic poultry population in the Cantons of Neuchâtel and Ticino and that competent veterinary authorities of the cantons have adequate disease control measures in place to rapidly identify, control, and eradicate the disease should it be reintroduced into Switzerland. Based on the results of the reassessment, APHIS recommends reinstating the Cantons Neuchâtel and Ticino onto the list of regions in which ND is not known to exist.

The report may be viewed on the *Regulations.gov* website or in our reading room. (Instructions for accessing *Regulations.gov* and information on the location and hours of the reading room are provided under the heading **ADDRESSES** at the beginning of this notice). The document is also available by contacting the person listed under **FOR FURTHER INFORMATION CONTACT**. Information submitted in support of this notice is also available by contacting the person listed under **FOR FURTHER INFORMATION CONTACT**.

After reviewing any comments we receive, we will announce our decision regarding the disease status of the Cantons of Neuchâtel and Ticino with respect to ND in a subsequent notice.

Authority: 7 U.S.C. 1622 and 8301–8317; 21 U.S.C. 136 and 136a; 31 U.S.C. 9701; 7 CFR 2.22, 2.80, and 371.4.

Done in Washington, DC, this 21st day of October 2020.

Michael Watson,

Acting Administrator, Animal and Plant Health Inspection Service.

[FR Doc. 2020–23664 Filed 10–23–20; 8:45 am]

BILLING CODE 3410–34–P

DEPARTMENT OF AGRICULTURE

Foreign Agricultural Service

Adjustment of Appendices Under the Dairy Tariff-Rate Quota Import Licensing Regulation for the 2020 Tariff-Rate Quota Year

AGENCY: Foreign Agricultural Service, USDA.

ACTION: Notice.

SUMMARY: This notice announces the transfer of amounts for certain dairy articles from the historical license category (Appendix 1) to the lottery (nonhistorical) license category (Appendix 2) pursuant to the Dairy Tariff-Rate Quota Import Licensing regulations, 7 CFR part 6, for the 2020 quota year.

DATES: October 26, 2020.

FOR FURTHER INFORMATION CONTACT: Abdelsalam El-Farra, (202) 720–9439; *abdelsalam.el-farra@fas.usda.gov.*

SUPPLEMENTARY INFORMATION: The Foreign Agricultural Service, under a delegation of authority from the Under Secretary for Trade and Foreign Agricultural Affairs, administers the Dairy Tariff-Rate Quota Import Licensing Regulation codified at 7 CFR 6.20–6.36 that provides for the issuance of licenses to import certain dairy articles under tariff-rate quotas (TRQs) as set forth in the Harmonized Tariff Schedule (HTS) of the United States. These dairy articles may only be entered into the United States at the low-tier tariff by or for the account of a person or firm to whom such licenses have been issued and only in accordance with the terms and conditions of the regulation.

Licenses are issued on a calendar year basis, and each license authorizes the license holder to import a specified quantity and type of dairy article from a specified country of origin. The Multilateral Affairs Division, Foreign Agricultural Service, U.S. Department of Agriculture, issues these licenses and, in conjunction with U.S. Customs and Border Protection, U.S. Department of Homeland Security, monitors their use.

The regulation at 7 CFR 6.34(a) states that whenever a historical license (Appendix 1) is permanently surrendered, revoked by the Licensing Authority, or not issued to an applicant pursuant to the provisions of § 6.23, then the amount of such license will be transferred to Appendix 2. Section 6.34(b) provides that the cumulative annual transfers will be published by notice in the **Federal Register**. Accordingly, this document sets forth the revised Appendices for the 2020 tariff-rate quota year in the table below. Although there are no changes to the quantities for designated licenses (Appendix 3 and Appendix 4) nor to the total amount for each article, those numbers are also included in the table below for completeness.

Pursuant to the Congressional Review Act (5 U.S.C. 801 *et seq.*), the Office of Information and Regulatory Affairs designated this notice as not a major rule, as defined by U.S.C. 804(2).

Lori Tortora,

Licensing Authority.

ARTICLES SUBJECT TO DAIRY IMPORT LICENSES FOR CALENDAR YEAR 2020

[Kilograms] [1]

	Historical Licenses (Appendix 1) [2]	Lottery Licenses (Appendix 2) [3]	Sum of Appendix 1 & 2 [4]	Designated Licenses (Tokyo Round, Appendix 3) [4]	Designated Licenses (Uruguay Round, Appendix 4) [4]	Total [4]
NON-CHEESE ARTICLES, Notes 6, 7, 8, 12, 14 (Appendix 1 reduction):						
BUTTER (NOTE 6, Commodity Code G) (−76,000 kg)	4,225,461	2,751,539	6,977,000			6,977,000
EU–27	62,599	33,562	96,161			
New Zealand	76,503	74,090	150,593			
Other Countries	35,382	38,553	73,935			
Any Country (−76,000 kg)	4,050,977	2,605,334	6,656,311			
DRIED SKIM MILK (NOTE 7, Commodity Code K)	0	5,261,000	5,261,000			5,261,000
Australia	0	600,076	600,076			
Canada	0	219,565	219,565			
Any Country	0	4,441,359	4,441,359			
DRIED WHOLE MILK (NOTE 8, Commodity Code H)	0	3,321,300	3,321,300			3,321,300
New Zealand	0	3,175	3,175			
Any Country	0	3,318,125	3,318,125			
DRIED BUTTERMILK/WHEY (NOTE 12, Commodity Code M)	0	224,981	224,981			224,981
Canada	0	161,161	161,161			
New Zealand	0	63,820	63,820			
BUTTER SUBSTITUTES CONTAINING OVER 45 PERCENT OF BUTTERFAT AND/OR BUTTER OIL (NOTE 14, Commodity Code SU)	0	6,080,500	6,080,500			6,080,500
Any Country	0	6,080,500	6,080,500			
TOTAL: NON-CHEESE ARTICLES (−76,000 kg)	4,225,461	17,639,320	21,864,781			21,864,781
CHEESE ARTICLES (Notes 16, 17, 18, 19, 20, 21, 22, 23, 25) (Appendix 1 reduction):						
CHEESE AND SUBSTITUTES FOR CHEESE (NOTE 16, Commodity Code OT)	17,613,583	13,856,148	31,469,731	9,661,128	7,496,000	48,626,859
Argentina	0	7,690	7,690	92,310		100,000
Australia	535,628	5,542	541,170	758,830	1,750,000	3,050,000
Canada	950,162	190,838	1,141,000			1,141,000
Costa Rica	0	0	0		1,550,000	1,550,000
EU–27 (not including Portugal)	13,866,255	9,272,092	23,138,347	908,877	3,446,000	27,493,224
Portugal	65,838	63,471	129,309	223,691		353,000
Israel	79,696	0	79,696	593,304		673,000
Iceland	29,054	264,946	294,000	29,000		323,000
New Zealand	1,351,000	3,464,472	4,815,472	6,506,528		11,322,000
Norway	122,860	27,140	150,000			150,000
Switzerland	512,184	159,228	671,412	548,588	500,000	1,720,000

ARTICLES SUBJECT TO DAIRY IMPORT LICENSES FOR CALENDAR YEAR 2020—Continued

[Kilograms] [1]

	Historical Licenses (Appendix 1) [2]	Lottery Licenses (Appendix 2) [3]	Sum of Appendix 1 & 2 [4]	Designated Licenses (Tokyo Round, Appendix 3) [4]	Designated Licenses (Uruguay Round, Appendix 4) [4]	Total [4]
Uruguay	0	0	0		250,000	250,000
Other Countries	100,906	100,729	201,635			201,635
Any Country	0	300,000	300,000			300,000
BLUE-MOLD CHEESE (NOTE 17, Commodity Code B)	1,933,126	547,875	2,481,001		430,000	2,911,001
Argentina	2,000	0	2,000			2,000
EU–27	1,931,126	547,874	2,479,000		350,000	2,829,000
Chile	0	0	0		80,000	80,000
Other Countries	0	1	1			1
CHEDDAR CHEESE (NOTE 18, Commodity Code C) (−4,676 kg)	2,296,319	1,987,537	4,283,856	519,033	7,620,000	12,422,889
Australia (-4,676 kg)	881,894	102,605	984,499	215,501	1,250,000	2,450,000
Chile	0	0	0		220,000	220,000
EU–27	52,404	210,596	263,000		1,050,000	1,313,000
New Zealand	1,265,070	1,531,398	2,796,468	303,532	5,100,000	8,200,000
Other Countries	96,951	42,938	139,889			139,889
Any Country	0	100,000	100,000			100,000
AMERICAN-TYPE CHEESE (NOTE 19, Commodity Code A) (−13,693 kg)	1,151,434	2,014,119	3,165,553	357,003	0	3,522,556
Australia (−4,623 kg)	753,578	127,420	880,998	119,002		1,000,000
EU–27	136,075	217,925	354,000			354,000
New Zealand (−9,070 kg)	158,725	1,603,274	1,761,999	238,001		2,000,000
Other Countries	103,056	65,500	168,556			168,556
EDAM AND GOUDA CHEESE (NOTE 20, Commodity Code D)	4,286,917	1,319,485	5,606,402	0	1,210,000	6,816,402
Argentina	105,418	19,582	125,000		110,000	235,000
EU–27	4,065,691	1,223,309	5,289,000		1,100,000	6,389,000
Norway	111,046	55,954	167,000			167,000
Other Countries	4,762	20,640	25,402			25,402
ITALIAN-TYPE CHEESES (NOTE 21, Commodity Code D) (−4,538 kg)	6,100,358	1,420,189	7,520,547	795,517	5,165,000	13,481,064
Argentina (−4,538 kg)	3,687,807	437,676	4,125,483	367,517	1,890,000	6,383,000
EU–27	2,412,551	969,449	3,382,000		2,025,000	5,407,000
Romania	0	0	0		500,000	500,000
Uruguay	0	0	0	428,000	750,000	1,178,000
Other Countries	0	13,064	13,064			13,064
SWISS OR EMMENTHALER CHEESE (NOTE 22, Commodity Code GR) (−13,657 kg)	4,224,349	2,426,965	6,651,314	823,519	380,000	7,854,833
EU–27 (−8,917 kg)	2,974,805	2,177,189	5,151,994	393,006	380,000	5,925,000
Switzerland (−4,740 kg)	1,216,046	203,441	1,419,487	430,513		1,850,000
Other Countries	33,498	46,335	79,833			79,833
LOWFAT CHEESE (NOTE 23, Commodity Code LF)	1,173,766	3,251,142	4,424,908	1,050,000	0	5,474,908
EU–27	1,173,766	3,251,141	4,424,907			4,424,907
Israel	0	0	0	50,000		50,000
New Zealand	0	0	0	1,000,000		1,000,000
Other Countries	0	1	1			1
SWISS OR EMMENTHALER CHEESE WITH EYE FORMATION (NOTE 25, Commodity Code SW)	13,091,848	9,205,483	22,297,331	9,557,945	2,620,000	34,475,276
Argentina	0	9,115	9,115	70,885		80,000
Australia	209,698	0	209,698	290,302		500,000
Canada	0	0	0	70,000		70,000
EU–27	9,762,199	6,714,629	16,476,828	4,003,172	2,420,000	22,900,000
Iceland	0	149,999	149,999	150,001		300,000
Israel	27,000	0	27,000			27,000
Norway	2,285,329	1,369,981	3,655,310	3,227,690		6,883,000
Switzerland	759,369	924,736	1,684,105	1,745,895	200,000	3,630,000
Other Countries	48,253	37,023	85,276			85,276
TOTAL: CHEESE ARTICLES (−36,564 kg)	51,871,700	36,028,943	87,900,643	22,540,454	24,921,000	135,362,097
TOTAL: CHEESE & NON-CHEESE (−112,564 kg)	56,097,161	53,668,263	109,765,424	22,540,454	24,921,000	157,226,878

[1] Source of the total TRQs is the U.S. Harmonized Tariff Schedule, Chapter 4, in the corresponding Additional U.S. Notes.
[2] Reduced from 2019 by total of 112,564 KG.
[3] Increased from 2019 by total of 112,564 KG.
[4] No change.

[FR Doc. 2020–23649 Filed 10–23–20; 8:45 am]

BILLING CODE 3410–10–P

CHEMICAL SAFETY AND HAZARD INVESTIGATION BOARD

Sunshine Act Meeting

TIME AND DATE: October 29, 2020, 11:00 a.m. EDT.

PLACE: Conference Call.

STATUS: Open to the public.

MATTERS TO BE CONSIDERED: The Chemical Safety and Hazard Investigation Board (CSB) will convene a public meeting on Thursday, October

29, 2020 at 11:00 a.m. EDT. The Board will discuss a summary and status update of safety recommendations and CSB investigations. The meeting will be available via conference call.

Additional Information

This meeting will only be available via the dial in number below.

If you require a translator or interpreter, please notify the individual listed below as the ''Contact Person for Further Information,'' at least three business days prior to the meeting.

Audience members should use the following dial-in number and Pin to join the conference:

(toll free) 877-830-2586 or (toll) 785-424-1734

Conference ID: SAFETY

The CSB is an independent federal agency charged with investigating incidents and hazards that result, or may result, in the catastrophic release of extremely hazardous substances. CSB Board Members are appointed by the President and confirmed by the Senate. CSB investigations look into all aspects of chemical accidents and hazards, including physical causes such as equipment failure as well as inadequacies in regulations, industry standards, and safety management systems.

Public Comment

The time provided for public statements will depend upon the number of people who wish to speak. Speakers should assume that their presentations will be limited to three minutes or less, but commenters may submit written statements for the record.

Contact Person for Further Information

Hillary Cohen, Communications Manager, at *public@csb.gov* or (202) 446–8094. Further information about this public meeting can be found on the CSB website at: *www.csb.gov.*

Dated: October 21, 2020.

Ray Porfiri,

Deputy General Counsel, Chemical Safety and Hazard Investigation Board.

[FR Doc. 2020–23701 Filed 10–22–20; 4:15 pm]

BILLING CODE 6350–01–P

COMMISSION ON CIVIL RIGHTS

Notice of Public Meeting of the Missouri Advisory Committee To Discuss the Pending Briefings on the State's Response to the Pandemic Caused by the Novel Corona Virus Known as COVID–19

AGENCY: U.S. Commission on Civil Rights.

ACTION: Announcement of meeting.

SUMMARY: Notice is hereby given, pursuant to the provisions of the rules and regulations of the U.S. Commission on Civil Rights (Commission) and the Federal Advisory Committee Act that the Missouri Advisory Committee (Committee) will hold a meeting on Wednesday, October 28, 2020 at 12:00 p.m. (Central) for the purpose of the meeting is to discuss and vote on the Voting/Covid memorandum.

DATES: The meeting will be held on Wednesday, October 28, 2020 at 12:00 p.m. (Central).

Public Call Information: Dial: (800) 353–6461, Conference ID: 9605153.

FOR FURTHER INFORMATION CONTACT: David Barreras, DFO, at *dbarreras@usccr.gov* or 312–353–8311.

SUPPLEMENTARY INFORMATION: Members of the public can listen to the discussion. This meeting is available to the public through the following call-in number: 800–353–6461, conference ID: 9605153. Any interested member of the public may call this number and listen to the meeting. An open comment period will be provided to allow members of the public to make a statement as time allows. The conference call operator will ask callers to identify themselves, the organization they are affiliated with (if any), and an email address prior to placing callers into the conference room. Callers can expect to incur regular charges for calls they initiate over wireless lines, according to their wireless plan. The Commission will not refund any incurred charges. Callers will incur no charge for calls they initiate over land-line connections to the toll-free telephone number. Individual who is deaf, deafblind and hard of hearing may also follow the proceedings by first calling the Federal Relay Service at 1–800–977–8339 and providing the Service with the conference call number and conference ID number.

Members of the public are also entitled to submit written comments; the comments must be received in the regional office within 30 days following the meeting. Written comments may be mailed to the Midwestern Regional Office, U.S. Commission on Civil Rights, 230 S Dearborn Street, Suite 2120, Chicago, IL 60604. They may also be faxed to the Commission at (312) 353–8324 or emailed to David Barreras at *dbarreras@usccr.gov.* Persons who desire additional information may contact the Midwestern Regional Office at (312) 353–8311.

Records generated from this meeting may be inspected and reproduced at the Midwestern Regional Office, as they become available, both before and after the meeting. Records of the meeting will be available via *www.facadatabase.gov* under the Commission on Civil Rights, Missouri Advisory Committee link (*https://facadatabase.gov/committee/committee.aspx?cid=258&aid=17*). Persons interested in the work of this Committee are directed to the Commission's website, *http://www.usccr.gov,* or may contact the Midwestern Regional Office at the above email or street address.

Agenda

I. Welcome and Roll Call
II. Approval of Minutes
III. Discussion and vote on the Voting/Covid memorandum
IV. Public Comment
V. Adjournment

Dated: October 20, 2020.

David Mussatt,

Supervisory Chief, Regional Programs Unit.

[FR Doc. 2020–23613 Filed 10–23–20; 8:45 am]

BILLING CODE P

DEPARTMENT OF COMMERCE

Census Bureau

Agency Information Collection Activities; Submission to the Office of Management and Budget (OMB) for Review and Approval; Comment Request; Current Population Survey, Annual Social and Economic (ASEC) Survey

The Department of Commerce will submit the following information collection request to the Office of Management and Budget (OMB) for review and clearance in accordance with the Paperwork Reduction Act of 1995, on or after the date of publication of this notice. We invite the general public and other Federal agencies to comment on proposed, and continuing information collections, which helps us assess the impact of our information collection requirements and minimize the public's reporting burden. Public comments were previously requested via the **Federal Register** (83 FR 42252) on August 21, 2018, during a 60-day comment period. This notice allows for

an additional 30 days for public comments.

Agency: U.S. Census Bureau.

Title: Current Population Survey, Annual Social and Economic Survey.

OMB Control Number: 0607–0354.

Form Number(s): None.

Type of Request: Regular submission, Request for Non-Substantive Change to a Currently Approved Information Collection.

Number of Respondents: 78,000.

Average Hours per Response: 25 minutes.

Burden Hours: 32,500.

Needs and Uses: Information on work experience, personal income, noncash benefits, current and previous year health insurance coverage, employer-sponsored insurance take-up, and migration is collected through the ASEC. The income data from the ASEC are used by social planners, economists, government officials, and market researchers to gauge the economic well-being of the country as a whole, and selected population groups of interest. This request is to add four questions to the ASEC. The added questions will assist researchers to evaluate the impact of governmental assistance programs on economic well-being, particularly for the Supplemental Poverty Measure (SPM).

- If children in the household are reported to have received school meals, a new follow-up question asks:

○ Did your children continue receiving free/reduced price meals through your school or school district if schools were closed during the Coronovirus-COVID–19 pandemic?''

Given widespread school closings in response to the COVID–19 pandemic, many school districts have shifted to alternative ways to distribute free school meals to children. However, the ability for families to take up these programs likely varies in ways that cannot be uniformly predicted, so adding a follow-up question about receipt of school meals during school closures helps to improve data quality on the market value of these benefits.

- Three new questions regarding stimulus payments are added for all households.

○ During 2020, did you or anyone receive any stimulus payments or payments received from the Department of the Treasury due to the Coronavirus Covid-19 pandemic?

○ Who was the stimulus payment for?

○ What was the amount of the stimulus payment you received for all covered adults and children in the household?

Stimulus payment information will allow researchers to estimate the amount of such payments received by households. The coronavirus stimulus payments disbursed in 2020 were based on income from 2018 or 2019, making it nearly impossible to model with only the 2020 income. This information will provide accurate data on stimulus payments received to properly estimate after-tax income for the SPM.

Affected Public: Individuals or households.

Frequency: Annually.

Respondent's Obligation: Voluntary.

Legal Authority: Title 13, United States Code, Sections 141, and 182; and Title 29, United States Code, Section 2 authorize the Census Bureau to collect this information.

This information collection request may be viewed at *www.reginfo.gov.* Follow the instructions to view the Department of Commerce collections currently under review by OMB.

Written comments and recommendations for the proposed information collection should be submitted within 30 days of the publication of this notice on the following website *www.reginfo.gov/public/do/PRAMain.* Find this particular information collection by selecting ''Currently under 30-day Review—Open for Public Comments'' or by using the search function and entering either the title of the collection or the OMB Control Number 0607–0354.

Sheleen Dumas,

Department PRA Clearance Officer, Office of the Chief Information Officer, Commerce Department.

[FR Doc. 2020–23634 Filed 10–23–20; 8:45 am]

BILLING CODE 3510–07–P

DEPARTMENT OF COMMERCE

Foreign-Trade Zones Board

[B–62–2020]

Foreign-Trade Zone (FTZ) 266—Dane County, Wisconsin; Notification of Proposed Production Activity, Coating Place, Inc. (Pharmaceuticals), Verona, Wisconsin

Coating Place, Inc. (CPI) submitted a notification of proposed production activity to the FTZ Board for its facility in Verona, Wisconsin. The notification conforming to the requirements of the regulations of the FTZ Board (15 CFR 400.22) was received on October 16, 2020.

The applicant has submitted a separate application for FTZ designation at the company's facility under FTZ 266. The facility is used for the contract manufacturing of pharmaceutical products. Pursuant to 15 CFR 400.14(b), FTZ activity would be limited to the specific foreign-status material and specific finished product described in the submitted notification (as described below) and subsequently authorized by the FTZ Board.

Production under FTZ procedures could exempt CPI from customs duty payments on the foreign-status component used in export production. On its domestic sales, for the foreign-status material noted below, CPI would be able to choose the duty rate during customs entry procedures that applies to lasmiditan drug product intermediate (duty free). CPI would be able to avoid duty on foreign-status material which become scrap/waste. Customs duties also could possibly be deferred or reduced on foreign-status production equipment.

The material sourced from abroad is lasmiditan hemisuccinate active pharmaceutical ingredient (duty rate, 6.5%).

Public comment is invited from interested parties. Submissions shall be addressed to the Board's Executive Secretary and sent to: *ftz@trade.gov.* The closing period for their receipt is December 7, 2020.

A copy of the notification will be available for public inspection in the ''Reading Room'' section of the Board's website, which is accessible via *www.trade.gov/ftz.*

For further information, contact Diane Finver at *Diane.Finver@trade.gov* or (202) 482–1367.

Dated: October 21, 2020.

Andrew McGilvray,

Executive Secretary.

[FR Doc. 2020–23662 Filed 10–23–20; 8:45 am]

BILLING CODE 3510–DS–P

DEPARTMENT OF COMMERCE

International Trade Administration

[A–570–898]

Chlorinated Isocyanurates From the People's Republic of China: Preliminary Results of Antidumping Duty Administrative Review, and Preliminary Determination of No Shipments; 2018–2019

AGENCY: Enforcement and Compliance, International Trade Administration, Department of Commerce.

SUMMARY: The Department of Commerce (Commerce) preliminarily finds that Heze Huayi Chemical Co., Ltd. (Heze Huayi) made sales of chlorinated isocyanurates from the People's Republic of China (China) at less than

normal value during the period of review (POR) June 1, 2018, through May 31, 2019, and that Juancheng Kangtai Chemical Co., Ltd. (Kangtai) had no shipments of subject merchandise during the POR.

DATES: Applicable October 26, 2020.

FOR FURTHER INFORMATION CONTACT: Sean Carey, AD/CVD Operations, Office VII, Enforcement and Compliance, International Trade Administration, U.S. Department of Commerce, 1401 Constitution Avenue NW, Washington, DC 20230; telephone: (202) 482–3964.

SUPPLEMENTARY INFORMATION:

Background

On July 29, 2019, Commerce initiated the administrative review of the AD order on chlorinated isocyanurates (chlorinated isos) from China covering the period June 1, 2018 through May 31, 2019.[1] The petitioners in this review are Bio-lab; Inc., Clearon Corp.; and Occidental Chemical Corp. (collectively, the petitioners). This review covers two producers/exporters: Heze Huayi and Kangtai.

On February 21, 2020, Commerce extended the deadline for the preliminary determination of this administrative review.[2] On April 24, 2020, Commerce tolled all deadlines in administrative reviews by 50 days.[3] Subsequently, on July 21, 2020, Commerce tolled all preliminary and final results in administrative reviews by an additional 60 days,[4] thereby extending the deadline for these final results until October 19, 2020.

For a complete description of the events that followed the initiation of this review, *see* the Preliminary Decision Memorandum.[5] A list of topics included in the Preliminary Decision Memorandum is included as Appendix I to this notice. The Preliminary Decision Memorandum is a public document and is on file electronically via Enforcement and Compliance's Antidumping and Countervailing Duty Centralized Electronic Service System (ACCESS). ACCESS is available to registered users at *https://access.trade.gov.* In addition, a complete version of the Preliminary Decision Memorandum can be accessed directly at *http://enforcement.trade.gov/frn/.* The signed and the electronic versions of the Preliminary Decision Memorandum are identical in content.

Scope of the Order

The products covered by the order are chlorinated isos, which are derivatives of cyanuric acid, described as chlorinated s-triazine triones.[6] Chlorinated isos are currently classifiable under subheadings 2933.69.6015, 2933.69.6021, 2933.69.6050, 3808.40.50, 3808.50.40 and 3808.94.5000 of the Harmonized Tariff Schedule of the United States (HTSUS). Although the HTSUS subheadings are provided for convenience and customs purposes, the written description of merchandise subject to the scope of the order is dispositive. For a full description of the scope of the order, *see* Preliminary Decision Memorandum.

Methodology

Commerce is conducting this administrative review in accordance with section 751(a)(1)(A) of the Tariff Act of 1930, as amended (the Act). Export prices have been calculated in accordance with section 772 of the Act. Because China is a non-market economy within the meaning of section 771(18) of the Act, normal value has been calculated in accordance with section 773(c) of the Act.

For a full description of the methodology underlying our conclusions, *see* the Preliminary Decision Memorandum. A list of the topics included in the Preliminary Decision Memorandum is included as an appendix to this notice.

Preliminary Determination of No Shipments

On August 28, 2019, Kangtai reported that it had no entries of subject merchandise during the POR.[7] U.S. Customs and Border Protection (CBP) did not have any information to contradict the claim of no shipments during the POR.[8] Therefore, we preliminarily determine that Kangtai had no reviewable entries during the POR. Consistent with Commerce's practice, we will not rescind the review with respect to Kangtai, but will complete the review and issue instructions to CBP based on the final results.[9]

Preliminary Results of Review

Commerce preliminarily determines that the following weighted-average dumping margin exists for Heze Huayi for the period of June 1, 2018 through May 31, 2019:

Exporter	Weight-average dumping margin percentage
Heze Huayi Chemical Co. Ltd	69.88

Disclosure and Public Comment

Commerce intends to disclose the calculations for these preliminary results within five days of the date of publication of this notice, in accordance with 19 CFR 351.224(b).

Interested parties may submit case briefs within 30 days after the date of publication of these preliminary results of review.[10] Rebuttals to case briefs, which must be limited to issues raised in the case briefs, must be filed within seven days after the time limit for filing case briefs.[11] Note that Commerce has temporarily modified certain of its requirements for serving documents containing business proprietary information until further notice.[12] Parties who submit case briefs or rebuttal briefs in this proceeding are requested to submit with each with each argument: (1) A statement of the issue; (2) a brief summary of the argument; and (3) a table of authorities.[13] Case and

[1] *See Initiation of Antidumping and Countervailing Duty Administrative Reviews,* 84 FR 36572 (July 29, 2019).

[2] *See* Memorandum, ''Chlorinated Isocyanurates from the People's Republic of China: Extension of Deadline for Preliminary Results of Antidumping Duty Administrative Review,'' dated February 21, 2020.

[3] *See* Memorandum, ''Tolling of Deadlines for Antidumping and Countervailing Duty Administrative Reviews in Response to Operational Adjustments Due to COVID–19,'' dated April 24, 2020.

[4] *See* Memorandum, ''Tolling of Deadlines for Antidumping and Countervailing Duty Administrative Reviews,'' dated July 21, 2020.

[5] *See* Memorandum, ''Decision Memorandum for the Preliminary Results of the 2018–2019 Antidumping Duty Administrative Review: Chlorinated Isocyanurates from the People's Republic of China,'' dated concurrently with, and hereby adopted by this notice (Preliminary Decision Memorandum).

[6] For a complete description of the Scope of the Order, *see* Preliminary Decision Memorandum.

[7] *See* Letter from Kangtai, ''Chlorinated Isocyanurates from the People's Republic of China: No Sales Certification,'' dated August 28, 2019. *See also* Letter from Kangtai, ''Chlorinated Isocyanurates from the People's Republic of China: Clarification of Letter Regarding No Sales Certification,'' dated September 6, 2019.

[8] *See* Memorandum, ''U.S. Customs and Border Protection (CBP) Data for Juancheng Kangtai Chemical Co., Ltd.,'' dated October 11, 2019.

[9] *See, e.g., Certain Frozen Warmwater Shrimp from Thailand; Preliminary Results of Antidumping Duty Administrative Review, Partial Rescission of Review, Preliminary Determination of No Shipments; 2012–2013,* 79 FR 15951, 15952 (March 24, 2014), unchanged in *Certain Frozen Warmwater Shrimp from Thailand: Final Results of Antidumping Duty Administrative Review, Final Determination of No Shipments, and Partial Rescission of Review; 2012–2013,* 79 FR 51306, 51307 (August 28, 2014).

[10] *See* 19 CFR 351.309(c)(1)(ii).

[11] *See* 19 CFR 351.309(d)(1) and (2).

[12] *See Temporary Rule Modifying AD/CVD Service Requirements Due to COVID–19; Extension of Effective Period,* 85 FR 41363 (July 10, 2020).

[13] *See* 19 CFR 351.309(c) and (d); *see also* 19 CFR 351.303 (for general filing requirements).

rebuttal briefs should be filed using ACCESS.[14]

Pursuant to 19 CFR 351.310(c), interested parties who wish to request a hearing, or to participate if one is requested, must submit a written request to the Assistant Secretary for Enforcement and Compliance, within 30 days of the date of publication of this notice.[15] Requests should contain: (1) The party's name, address and telephone number; (2) the number of participants; and (3) a list of issues to be discussed. Issues raised in the hearing will be limited to those raised in the respective case and rebuttal briefs. If a request for a hearing is made, Commerce intends to hold the hearing at a time and date to be determined.[16] Parties should confirm by telephone the date, time, and location of the hearing two days before the scheduled date.

Commerce intends to issue the final results of this administrative review, which will include the results of our analysis of all issues raised in the case briefs, within 120 days of publication of these preliminary results in the **Federal Register**, unless extended, pursuant to section 751(a)(3)(A) of the Act.

Assessment Rates

Upon issuing the final results of this review, Commerce shall determine, and U.S. Customs and Border Protection (CBP) shall assess, antidumping duties on all appropriate entries covered by this review.[17] Commerce intends to issue assessment instructions to CBP 15 days after the date of publication of the final results of this review.

In accordance with 19 CFR 351.212(b)(1), we are calculating importer- or customer- specific assessment rates for the merchandise subject to this review. For any individually examined respondent whose weighted-average dumping margin is above *de minimis* (*i.e.,* 0.50 percent), Commerce will calculate importer-specific assessment rates on the basis of the ratio of the total amount of dumping calculated for the importer's examined sales and the total entered value of sales.[18] We will instruct CBP to assess antidumping duties on all appropriate entries covered by this review when the importer-specific assessment rate is above *de minimis.* Where either the respondent's weighted-average dumping margin is zero or *de minimis,* or an importer-specific assessment rate is zero or *de minimis,* we will instruct CBP to liquidate the appropriate entries without regard to antidumping duties.

For entries that were not reported in the U.S. sales database submitted by an exporter individually examined during this review, Commerce will instruct CBP to liquidate such entries at the China-wide rate. Additionally, if Commerce determines that an exporter under review had no shipments of the subject merchandise, any suspended entries that entered under that exporter's case number will be liquidated at the China-wide rate.[19]

Cash Deposit Requirements

The following cash deposit requirements will be effective upon publication of the final results of this administrative review for all shipments of the subject merchandise from China entered, or withdrawn from warehouse, for consumption on or after the publication date, as provided for by section 751(a)(2)(C) of the Act: (1) For the exporter listed above, the cash deposit rate will be the rate established in the final results of this review (except, if the rate is zero or *de minimis,* a zero cash deposit rate will be required for that company); (2) for previously investigated or reviewed Chinese and non-Chinese exporters not listed above that have separate rates, the cash deposit rate will continue to be the existing producer/exporter-specific combination rate published for the most recent period; (3) for all Chinese exporters of subject merchandise that have not been found to be eligible for a separate rate, the cash deposit rate will be the PRC-wide rate of 285.63 percent;[20] and (4) for all non-Chinese exporters of subject merchandise which have not received their own rate, the cash deposit rate will be the rate applicable to the Chinese exporter(s) that supplied that non-Chinese exporter. These cash deposit requirements, when imposed, shall remain in effect until further notice.

Notification to Importers

This notice also serves as a reminder to importers of their responsibility under 19 CFR 351.402(f)(2) to file a certificate regarding the reimbursement of antidumping duties prior to liquidation of the relevant entries during this review period. Failure to comply with this requirement could result in Commerce's presumption that reimbursement of antidumping duties occurred and the subsequent assessment of double antidumping duties.

Notification to Interested Parties

We are issuing and publishing these results in accordance with sections 751(a)(1) and 777(i)(1) of the Act and 19 CFR 351.213 and 19 CFR 351.221(b)(4).

Dated: October 19, 2020.

Jeffrey I. Kessler,

Assistant Secretary for Enforcement and Compliance.

Appendix

List of Topics Discussed in the Preliminary Decision Memorandum

I. Summary
II. Background
III. Scope of the Order
IV. Discussion of the Methodology
V. Recommendation

[FR Doc. 2020–23661 Filed 10–23–20; 8:45 am]

BILLING CODE 3510–DS–P

[14] *See* 19 CFR 351.303.

[15] *See* 19 CFR 351.310(c).

[16] *See* 19 CFR 351.310(d).

[17] *See* 19 CFR 351.212(b)(1).

[18] *See Antidumping Proceedings: Calculation of the Weighted-Average Dumping Margin and Assessment Rate in Certain Antidumping Proceedings; Final Modification,* 77 FR 8101 (February 14, 2012).

[19] *See Non-Market Economy Antidumping Proceedings: Assessment of Antidumping Duties,* 76 FR 65694 (October 24, 2011).

[20] *See Notice of Final Determination of Sales at Less Than Fair Value: Chlorinated Isocyanurates from the People's Republic of China,* 70 FR 24502, 24505 (May 10, 2005).

DEPARTMENT OF COMMERCE

International Trade Administration

[A–831–804, A–351–856, A–523–815, A–821–828, A–489–844]

Certain Aluminum Foil From the Republic of Armenia, Brazil, the Sultanate of Oman, the Russian Federation, and the Republic of Turkey: Initiation of Less-Than-Fair-Value Investigations

AGENCY: Enforcement and Compliance, International Trade Administration, Department of Commerce.

DATES: Applicable October 19, 2020.

FOR FURTHER INFORMATION CONTACT: Margaret Collins at (202) 482–6250 (the Republic of Armenia (Armenia)); George McMahon at (202) 482–1167 (Brazil); Benjamin Smith at (202) 482–2181 (the Sultanate of Oman (Oman)); Mike Heaney at (202) 482–4475 (the Russian Federation (Russia)); Christopher Williams at (202) 482–5166 (the Republic of Turkey (Turkey)); AD/CVD Operations, Enforcement and Compliance, International Trade Administration, U.S. Department of Commerce, 1401 Constitution Avenue NW, Washington, DC 20230.

SUPPLEMENTARY INFORMATION:

The Petitions

On September 29, 2020, the Department of Commerce (Commerce) received antidumping duty (AD)

petitions concerning imports of certain aluminum foil (aluminum foil) from Armenia, Brazil, Oman, Russia, and Turkey filed in proper form on behalf of the petitioners,[1] domestic producers of aluminum foil.[2] The Petitions were accompanied by countervailing duty (CVD) petitions concerning imports of aluminum foil from Oman and Turkey.[3]

On October 2, 2020, Commerce requested supplemental information pertaining to certain aspects of the Petitions in separate supplemental questionnaires.[4] The petitioners filed responses to the supplemental questionnaires on October 6, 2020.[5]

In accordance with section 732(b) of the Tariff Act of 1930, as amended (the Act), the petitioners allege that imports of aluminum foil from Armenia, Brazil, Oman, Russia, and Turkey are being, or are likely to be, sold in the United States at less than fair value (LTFV) within the meaning of section 731 of the Act, and that imports of such products are materially injuring, or threatening material injury to, the aluminum foil industry in the United States. Consistent with section 732(b)(1) of the Act, the Petitions are accompanied by information reasonably available to the petitioners supporting their allegations.

Commerce finds that the petitioners filed the Petitions on behalf of the domestic industry, because the petitioners are interested parties, as defined in sections 771(9)(C) and (E) of the Act.

Commerce also finds that the petitioners demonstrated sufficient industry support for the initiation of the requested AD investigations.[6]

Periods of Investigation

Because the Petitions were filed on September 29, 2020, pursuant to 19 CFR 351.204(b)(1), the period of investigation (POI) for the Brazil, Oman, Russia, and Turkey AD investigations is July 1, 2019 through June 30, 2020. Because Armenia is a non-market economy (NME) country, pursuant to 351.204(b)(1), the POI for the Armenia investigation is January 1, 2020 through June 30, 2020.

Scope of the Investigations

The product covered by these investigations is aluminum foil from Armenia, Brazil, Oman, Russia, and Turkey. For a full description of the scope of these investigations, *see* the appendix to this notice.

Comments on the Scope of the Investigations

On October 2 and 16, 2020, Commerce requested information from the petitioners regarding the proposed scope to ensure that the scope language in the Petitions is an accurate reflection of the products for which the domestic industry is seeking relief.[7] On October 16, 2020, the petitioners revised the scope.[8] The description of merchandise covered by these investigations, as described in the appendix to this notice, reflects these clarifications.

As discussed in the *Preamble* to Commerce's regulations, we are setting aside a period for interested parties to raise issues regarding product coverage (*i.e.,* scope).[9] Commerce will consider all comments received from interested parties and, if necessary, will consult with interested parties prior to the issuance of the preliminary determinations. If scope comments include factual information,[10] all such factual information should be limited to public information. To facilitate preparation of its questionnaires, Commerce requests that all interested parties submit such comments by 5:00 p.m. Eastern Time (ET) on November 9, 2020, which is the next business day after 20 calendar days from the signature date of this notice.[11] Any rebuttal comments, which may include factual information, must be filed by 5:00 p.m. ET on November 19, 2020, which is 10 calendar days from the initial comment deadline.

Commerce requests that any factual information that parties consider relevant to the scope of the investigations be submitted during this period. However, if a party subsequently finds that additional factual information pertaining to the scope of the investigations may be relevant, the party may contact Commerce and request permission to submit the additional information. All such submissions must be filed on the records of the concurrent AD and CVD investigations.

Filing Requirements

All submissions to Commerce must be filed electronically via Enforcement and Compliance's Antidumping Duty and Countervailing Duty Centralized Electronic Service System (ACCESS), unless an exception applies.[12] An electronically filed document must be received successfully in its entirety by the time and date it is due.

Comments on Product Characteristics

Commerce is providing interested parties an opportunity to comment on the appropriate physical characteristics of aluminum foil to be reported in response to Commerce's AD questionnaires. This information will be used to identify the key physical characteristics of the subject merchandise in order to report the relevant costs of production accurately, as well as to develop appropriate product-comparison criteria.

Interested parties may provide any information or comments that they feel are relevant to the development of an accurate list of physical characteristics. Specifically, they may provide comments as to which characteristics are appropriate to use as: (1) General

[1] The Aluminum Association Trade Enforcement Working Group and its individual members, Gränges Americas Inc., JW Aluminum Company, and Novelis Corporation (collectively, the petitioners). The petitioners indicated that Novelis Corporation acquired Aleris Corporation (including all of Aleris' aluminum foil-related operations), effective April 14, 2020. *See* Volume I of the Petitions at 1, footnote 1.

[2] *See* Petitioners' Letter, ''Certain Aluminum Foil from Armenia, Brazil, Oman, Russia, and Turkey—Petition for the Imposition of Antidumping and Countervailing Duties,'' dated September 29, 2020 (the Petitions).

[3] *Id.*

[4] *See* Commerce's Letters, ''Petition for the Imposition of Antidumping Duties on Imports of Certain Aluminum Foil from Armenia, Brazil, Oman, Russia, and Turkey: Supplemental Questions,'' dated October 2, 2020 (General Issues Supplemental); and Country-Specific Supplemental Questionnaires: Armenia Supplemental, Brazil Supplemental, Oman Supplemental, Russia Supplemental, and Turkey Supplemental, dated October 2, 2020.

[5] *See* Petitioners' Country-Specific Supplemental Responses, dated October 6, 2020; *see also* Petitioners' Letter, ''Certain Aluminum Foil from Armenia, Brazil, Oman, Russia, and Turkey—Petitioners' Amendments to Volume I Relating to General Issues,'' dated October 6, 2020 (General Issues Supplement).

[6] *See infra,* section on ''Determination of Industry Support for the Petitions.''

[7] *See* General Issues Supplemental at 3–4; *see also* Memorandum, ''Phone Call with Counsel to the Petitioners,'' dated October 16, 2020 (Scope Call Memorandum) at 1–2.

[8] *See* Scope Call Memorandum at 1–2.

[9] *See Antidumping Duties; Countervailing Duties, Final Rule,* 62 FR 27296, 27323 (May 19, 1997) (*Preamble*).

[10] *See* 19 CFR 351.102(b)(21) (defining ''factual information'').

[11] The 20-day deadline falls on November 8, 2020, which is a Sunday. Therefore, in accordance with the *Next Business Day Rule,* the deadline moves to the next business day, November 9, 2020. *See Notice of Clarification: Application of ''Next Business Day'' Rule for Administrative Determination Deadlines Pursuant to the Tariff Act of 1930, as Amended,''* 70 FR 24533 (May 10, 2008) (*Next Business Day Rule*).

[12] *See Antidumping and Countervailing Duty Proceedings: Electronic Filing Procedures; Administrative Protective Order Procedures,* 76 FR 39263 (July 6, 2011); *see also Enforcement and Compliance; Change of Electronic Filing System Name,* 79 FR 69046 (November 20, 2014) for details of Commerce's electronic filing requirements, effective August 5, 2011. Information on help using ACCESS can be found at *https://access.trade.gov/help.aspx* and a handbook can be found at *https://access.trade.gov/help/Handbook_on_Electronic_Filing_Procedures.pdf.*

product characteristics; and (2) product comparison criteria. We note that it is not always appropriate to use all product characteristics as product comparison criteria. We base product comparison criteria on meaningful commercial differences among products. In other words, although there may be some physical product characteristics utilized by manufacturers to describe aluminum foil, it may be that only a select few product characteristics take into account commercially meaningful physical characteristics. In addition, interested parties may comment on the order in which the physical characteristics should be used in matching products. Generally, Commerce attempts to list the most important physical characteristics first and the least important characteristics last.

In order to consider the suggestions of interested parties in developing and issuing the AD questionnaires, all product characteristics comments must be filed by 5:00 p.m. ET on November 9, 2020, which is the next business day after 20 calendar days from the signature date of this notice.[13] Any rebuttal comments must be filed by 5:00 p.m. ET on November 19, 2020. All comments and submissions to Commerce must be filed electronically using ACCESS, as explained above, on the record of each of the AD investigations.

Determination of Industry Support for the Petitions

Section 732(b)(1) of the Act requires that a petition be filed on behalf of the domestic industry. Section 732(c)(4)(A) of the Act provides that a petition meets this requirement if the domestic producers or workers who support the petition account for: (i) At least 25 percent of the total production of the domestic like product; and (ii) more than 50 percent of the production of the domestic like product produced by that portion of the industry expressing support for, or opposition to, the petition. Moreover, section 732(c)(4)(D) of the Act provides that, if the petition does not establish support of domestic producers or workers accounting for more than 50 percent of the total production of the domestic like product, Commerce shall: (i) Poll the industry or rely on other information in order to determine if there is support for the petition, as required by subparagraph (A); or (ii) determine industry support using a statistically valid sampling method to poll the ''industry.''

Section 771(4)(A) of the Act defines the ''industry'' as the producers as a whole of a domestic like product. Thus, to determine whether a petition has the requisite industry support, the statute directs Commerce to look to producers and workers who produce the domestic like product. The International Trade Commission (ITC), which is responsible for determining whether ''the domestic industry'' has been injured, must also determine what constitutes a domestic like product in order to define the industry. While both Commerce and the ITC must apply the same statutory definition regarding the domestic like product,[14] they do so for different purposes and pursuant to a separate and distinct authority. In addition, Commerce's determination is subject to limitations of time and information. Although this may result in different definitions of the like product, such differences do not render the decision of either agency contrary to law.[15]

Section 771(10) of the Act defines the domestic like product as ''a product which is like, or in the absence of like, most similar in characteristics and uses with, the article subject to an investigation under this title.'' Thus, the reference point from which the domestic like product analysis begins is ''the article subject to an investigation'' (*i.e.,* the class or kind of merchandise to be investigated, which normally will be the scope as defined in the petition).

With regard to the domestic like product, the petitioners do not offer a definition of the domestic like product distinct from the scope of the investigations.[16] Based on our analysis of the information submitted on the record, we have determined that aluminum foil, as defined in the scope, constitutes a single domestic like product, and we have analyzed industry support in terms of that domestic like product.[17]

In determining whether the petitioners have standing under section 732(c)(4)(A) of the Act, we considered the industry support data contained in the Petitions with reference to the domestic like product as defined in the ''Scope of the Investigations,'' in the appendix to this notice. To establish industry support, the petitioners provided the 2019 production of the domestic like product by U.S. producers that support the Petitions.[18] The petitioners estimated the production of the domestic like product for the remaining U.S. producers of aluminum foil based on the Aluminum Association's knowledge of the industry.[19] We relied on data provided by the petitioners for purposes of measuring industry support.[20]

Our review of the data provided in the Petitions, the General Issues Supplement, and other information readily available to Commerce indicates that the petitioners have established industry support for the Petitions.[21] First, the Petitions established support from domestic producers (or workers) accounting for more than 50 percent of the total production of the domestic like product and, as such, Commerce is not required to take further action in order to evaluate industry support (*e.g.,* polling).[22] Second, the domestic producers (or workers) have met the statutory criteria for industry support under section 732(c)(4)(A)(i) of the Act because the domestic producers (or workers) who support the Petitions account for at least 25 percent of the total production of the domestic like product.[23] Finally, the domestic producers (or workers) have met the statutory criteria for industry support under section 732(c)(4)(A)(ii) of the Act because the domestic producers (or workers) who support the Petitions account for more than 50 percent of the production of the domestic like product produced by that portion of the industry expressing support for, or opposition to,

[13] *See* 19 CFR 351.303(b)(1). The 20-day deadline falls on November 8, 2020, which is a Sunday. Therefore, in accordance with the *Next Business Day Rule,* the deadline moves to the next business day, November 9, 2020. *See id. Next Business Day Rule.*

[14] *See* section 771(10) of the Act.

[15] *See USEC, Inc.* v. *United States,* 132 F. Supp. 2d 1, 8 (CIT 2001) (citing *Algoma Steel Corp., Ltd.* v. *United States,* 688 F. Supp. 639, 644 (CIT 1988), *aff'd* 865 F.2d 240 (Fed. Cir. 1989)).

[16] *See* Volume I of the Petitions at 12–13 and Exhibit GEN–9 (containing *Aluminum Foil from China,* Inv. Nos. 701–TA–570 and 731–TA–1346 (Final), USITC Pub. 4771 (April 2018) (*ITC Aluminum Foil Final*) at 10–16).

[17] For a discussion of the domestic like product analysis as applied to these cases and information regarding industry support, *see* country-specific AD Initiation Checklists at Attachment II, Analysis of Industry Support for the Antidumping and Countervailing Duty Petitions Covering Certain Aluminum Foil from Armenia, Brazil, Oman, Russia, and Turkey (Attachment II). These checklists are dated concurrently with this notice and on file electronically via ACCESS.

[18] *See* Volume I of the Petitions at 4–5 and Exhibit GEN–1; *see also* General Issues Supplement at 4–5.

[19] *Id.* at 4–5 and Exhibits GEN–1, GEN–2, and GEN–3; *see also* General Issues Supplement at 4–5.

[20] *Id.* at 4–5 and Exhibits GEN–1 and GEN–3.

[21] *Id.* at 2–5 and Exhibits GEN–1, GEN–2, and GEN–3; *see also* General Issues Supplement at 4–5.

[22] *Id.; see also* section 732(c)(4)(D) of the Act.

[23] *See* Volume I of the Petitions at 4–5 and Exhibits GEN–1, GEN–2, and GEN–3 *see also* General Issues Supplement at 4–5. For further discussion, *see* Attachment II of the country-specific AD Initiation Checklists.

the Petitions.[24] Accordingly, Commerce determines that the Petitions were filed on behalf of the domestic industry within the meaning of section 732(b)(1) of the Act.[25]

Allegations and Evidence of Material Injury and Causation

The petitioners allege that the U.S. industry producing the domestic like product is being materially injured, or is threatened with material injury, by reason of the imports of the subject merchandise sold at LTFV. In addition, the petitioners allege that subject imports exceed the negligibility threshold provided for under section 771(24)(A) of the Act.[26]

The petitioners contend that the industry's injured condition is illustrated by a significant and increasing volume of subject imports; reduced market share; underselling and price depression or suppression; lost sales and revenues; declining domestic production, shipments, and capacity utilization; negative effects on domestic industry employment; and a decline in financial performance and profitability.[27] We have assessed the allegations and supporting evidence regarding material injury, threat of material injury, causation, as well as negligibility, and we have determined that these allegations are properly supported by adequate evidence, and meet the statutory requirements for initiation.[28]

Allegations of Sales at LTFV

The following is a description of the allegations of sales at LTFV upon which Commerce based its decision to initiate AD investigations of imports of aluminum foil from Armenia, Brazil, Oman, Russia, and Turkey. The sources of data for the deductions and adjustments relating to U.S. price and normal value (NV) are discussed in greater detail in the country-specific AD Initiation Checklists.

U.S. Price

For Armenia, Brazil, Oman, Russia, and Turkey, the petitioners based export price (EP) or constructed export price (CEP), as applicable, on pricing information for sales of, or sales offers for, aluminum foil produced in and exported from each country. The petitioners made certain adjustments to U.S. price to calculate a net ex-factory U.S. price.[29]

Normal Value [30]

For Brazil, Oman, Russia, and Turkey, the petitioners based NV on home market price quotes obtained through market research for aluminum foil produced in and sold, or offered for sale, in each country within the applicable time period.[31]

Commerce considers Armenia to be a non-market economy (NME) country.[32] In accordance with section 771(18)(C)(i) of the Act, any determination that a foreign country is an NME country shall remain in effect until revoked by Commerce. Therefore, we continue to treat Armenia as an NME country for purposes of the initiation of this investigation. Accordingly, NV in Armenia is appropriately based on factors of production (FOPs) valued in a surrogate market economy country, in accordance with section 773(c) of the Act.

The petitioners claim that South Africa is an appropriate surrogate country for Armenia because South Africa is a market economy country that is at a level of economic development comparable to that of Armenia and is a significant producer of identical merchandise. The petitioners provided publicly available information from South Africa to value all FOPs. Based on the information provided by the petitioners, we determine that it is appropriate to use South Africa as a surrogate country for initiation purposes.

Interested parties will have the opportunity to submit comments regarding surrogate country selection and, pursuant to 19 CFR 351.301(c)(3)(i), will be provided an opportunity to submit publicly available information to value FOPs within 30 days before the scheduled date of the preliminary determination.

Factors of Production

Because information regarding the volume of inputs consumed by Armenian producers/exporters was not reasonably available, the petitioners used their own product-specific consumption rates as a surrogate to value Armenian manufacturers' FOPs.[33] Additionally, the petitioners calculated factory overhead; selling, general and administrative expenses; and profit based on the experience of a South African producer of identical merchandise.[34]

Fair Value Comparisons

Based on the data provided by the petitioners, there is reason to believe that imports of aluminum foil from Armenia, Brazil, Oman, Russia, and Turkey are being, or are likely to be, sold in the United States at LTFV. Based on comparisons of EP or CEP, as applicable, to NV in accordance with sections 772 and 773 of the Act, the estimated dumping margins for aluminum foil for each of the countries covered by this initiation are as follows: (1) Armenia—45.65 percent; (2) Brazil—63.05 percent; (3) Oman—57.74 percent; (4) Russia—62.18 percent; and (5) Turkey—34.27 percent.[35]

Initiation of LTFV Investigations

Based upon the examination of the Petitions and supplemental responses, we find that they meet the requirements of section 732 of the Act. Therefore, we are initiating AD investigations to determine whether imports of aluminum foil from Armenia, Brazil, Oman, Russia, and Turkey are being, or are likely to be, sold in the United States at LTFV. In accordance with section 733(b)(1)(A) of the Act and 19 CFR 351.205(b)(1), unless postponed, we will make our preliminary determinations no later than 140 days after the date of this initiation.

Respondent Selection

Brazil, Russia, and Turkey

In the Petitions, the petitioners named seven companies in Brazil, three companies in Russia, and ten companies in Turkey [36] as producers/exporters of aluminum foil. Following standard practice in AD investigations involving

[24] *Id.*

[25] *Id.*

[26] *See* Volume I of the Petitions at 14–15 and Exhibit GEN–10.

[27] *See* Volume I of the Petitions at 18–32 and Exhibits GEN–7 and GEN–10 through GEN–15.

[28] *See* country-specific AD Initiation Checklists at Attachment III, Analysis of Allegations and Evidence of Material Injury and Causation for the Antidumping and Countervailing Duty Petitions Covering Certain Aluminum Foil from Armenia, Brazil, Oman, Russia, and Turkey (Attachment III).

[29] *See* country-specific AD Initiation Checklists.

[30] In accordance with section 773(b)(2) of the Act, for the Brazil, Oman, Russia, and Turkey investigations, Commerce will request information necessary to calculate the constructed value and cost of production (COP) to determine whether there are reasonable grounds to believe or suspect that sales of the foreign like product have been made at prices that represent less than the COP of the product.

[31] *See* country-specific AD Initiation Checklists.

[32] Armenia, formerly part of the Union of Soviet Socialist Republics (USSR), assumed the NME status of the USSR upon the dissolution of the USSR, and, at that time, Commerce explained that such status would remain in effect until revoked. *See Preliminary Determinations of Sales at Not Less Than Fair Value: Uranium from Armenia, Azerbaijan, Belarus, Georgia, Moldova and Turkmenistan,* 57 FR 23380, 23383 (June 3, 1992). To date, Commerce has not revoked the NME status of Armenia.

[33] *See* Volume II of the Petitions at 3–4, Exhibit AD–AM–3.

[34] *Id.* at 4–5, Exhibit AD–AM–3.

[35] *See* country-specific Initiation Checklists for details of calculations.

[36] *See* Volume I of the Petition at 10 and Exhibit GEN–6.

market economy countries, in the event Commerce determines that the number of exporters or producers in any individual case is large such that Commerce cannot individually examine each company based upon its resources, where appropriate, Commerce intends to select mandatory respondents in that case based on U.S. Customs and Border Protection (CBP) data for U.S. imports under the appropriate Harmonized Tariff Schedule of the United States numbers listed in the ''Scope of the Investigations,'' in the appendix.

On October 15, 2020, Commerce released CBP data on imports of aluminum foil from Brazil, Russia, and Turkey under Administrative Protective Order (APO) to all parties with access to information protected by APO and indicated that interested parties wishing to comment on the CBP data must do so within three business days of the publication date of the notice of initiation of these investigations.[37] Comments must be filed electronically using ACCESS. An electronically filed document must be received successfully in its entirety via ACCESS by 5:00 p.m. ET on the specified deadline. Commerce will not accept rebuttal comments regarding the CBP data or respondent selection.

Interested parties must submit applications for disclosure under APO in accordance with 19 CFR 351.305(b). Instructions for filing such applications may be found on Commerce's website at *http://enforcement.trade.gov/apo.*

Oman

In the Petition, the petitioners named only one company as a producer/exporter of aluminum foil in Oman, Oman Aluminum Rolling Company.[38] Furthermore, we placed CBP import data onto the record of this proceeding, which corroborates the identification of Oman Aluminum Rolling Company as the sole producer/exporter in the foreign market,[39] and we currently know of no additional producers/exporters of subject merchandise from Oman. Accordingly, Commerce intends to examine all known producers/exporters in this investigation (*i.e.,* the company cited above). As noted in the Oman CBP Import Data Release Memo, we invite interested parties to comment on this issue within three days of the publication of this notice in the **Federal Register**. Commerce will not accept rebuttal comments regarding the CBP data or this issue. Because we intend to examine all known producers, if no comments are received or if comments received further support the existence of this sole producer/exporter in Oman, we do not intend to conduct respondent selection and will proceed to issuing the initial antidumping questionnaire to the company identified. However, if comments are received which create a need for a respondent selection process, we intend to finalize our decisions regarding respondent selection within 20 days of publication of this notice.

Armenia

In the Petition, the petitioners named only one company as a producer/exporter of aluminum foil in Armenia, Rusal Armenal.[40] On October 15, 2020, Commerce released CBP data on imports of aluminum foil from Armenia under APO to all parties with access to information protected by APO. These data did not confirm the existence of only one producer/exporter of aluminum foil in Armenia.[41] Commerce indicated that interested parties wishing to comment on the CBP data must do so within three business days of the publication date of the notice of initiation of these investigations. Comments must be filed electronically using ACCESS. An electronically filed document must be received successfully in its entirety via ACCESS by 5:00 p.m. ET on the specified deadline. Commerce will not accept rebuttal comments regarding the CBP data or respondent selection.

In accordance with our standard practice for respondent selection in AD investigations involving NME countries, Commerce selects respondents based on quantity and value (Q&V) questionnaires in cases where it has determined that the number of companies is large and it cannot individually examine each company based upon its resources. Therefore, considering the number of Armenian producers and exporters identified in the Petitions and the CBP import data, Commerce will solicit Q&V information that can serve as a basis for selecting exporters for individual examination in the event that Commerce decides to limit the number of respondents individually examined pursuant to section 777A(c)(2) of the Act. Commerce has determined that it will issue a Q&V questionnaire to the potential respondent for which the petitioners have provided a complete address.

In addition, Commerce will post the Q&V questionnaire along with filing instructions on Enforcement and Compliance's website at *https://www.trade.gov/ec-adcvd-case-announcements.* Producers/exporters of aluminum foil from Armenia that do not receive Q&V questionnaires may still submit a response to the Q&V questionnaire and can obtain a copy of the Q&V questionnaire from Enforcement and Compliance's website. In accordance with the standard practice for respondent selection in AD cases involving NME countries, in the event Commerce decides to limit the number of respondents individually investigated, Commerce intends to base respondent selection on the responses to the Q&V questionnaire that it receives.

Responses to the Q&V questionnaire must be submitted by the relevant Armenian producers/exporters no later than 5:00 p.m. ET on November 2, 2020. All Q&V questionnaire responses must be filed electronically via ACCESS. An electronically filed document must be received successfully, in its entirety, by ACCESS no later than 5:00 p.m. ET on the deadline noted above. Commerce intends to finalize its decisions regarding respondent selection within 20 days of publication of this notice.

Separate Rates

In order to obtain separate-rate status in an NME investigation, exporters and producers must submit a separate-rate application.[42] The specific requirements for submitting a separate- rate application in an Armenia investigation are outlined in detail in the application itself, which is available on Commerce's website at *http://enforcement.trade.gov/nme/nme-sep-rate.html.* The separate-rate application will be due 30 days after publication of this initiation notice.[43] Exporters and producers who submit a separate-rate application and have been selected as mandatory respondents will be eligible for consideration for separate-rate status only if they respond to all parts of Commerce's AD questionnaire as

[37] *See* country-specific Memoranda, ''Antidumping Duty Investigation of Certain Aluminum Foil: Release of Customs Data from U.S. Customs and Border Protection,'' dated October 15, 2020.

[38] *See* Volume IV of the Petition at 2 and Exhibit GEN–6.

[39] *See* Memorandum, ''Release of Customs Data from U.S. Customs and Border Protection,'' dated October 15, 2020 (Oman CBP Import Data Release Memo).

[40] *See* Volume II of the Petition at 3 and Exhibit GEN–6.

[41] *See* Memorandum, ''Release of Customs Data from U.S. Customs and Border Protection,'' dated October 15, 2020 (Armenia CBP Import Data Release Memo).

[42] *See* Policy Bulletin 05.1: Separate-Rates Practice and Application of Combination Rates in Antidumping Investigation involving NME Countries (April 5, 2005), available at *http://enforcement.trade.gov/policy/bull05-1.pdf* (Policy Bulletin 05.1).

[43] Although in past investigations this deadline was 60 days, consistent with 19 CFR 351.301(a), which states that ''the Secretary may request any person to submit factual information at any time during a proceeding,'' this deadline is now 30 days.

mandatory respondents. Commerce requires that companies from Armenia submit a response both to the Q&V questionnaire and to the separate-rate application by the respective deadlines in order to receive consideration for separate-rate status. Companies not filing a timely Q&V questionnaire response will not receive separate rate consideration.

Use of Combination Rates

Commerce will calculate combination rates for certain respondents that are eligible for a separate rate in an NME investigation. The Separate Rates and Combination Rates Bulletin states:

{w}hile continuing the practice of assigning separate rates only to exporters, all separate rates that the Department will now assign in its NME Investigation will be specific to those producers that supplied the exporter during the period of investigation. Note, however, that one rate is calculated for the exporter and all of the producers which supplied subject merchandise to it during the period of investigation. This practice applies both to mandatory respondents receiving an individually calculated separate rate as well as the pool of non-investigated firms receiving the weighted-average of the individually calculated rates. This practice is referred to as the application of ''combination rates'' because such rates apply to specific combinations of exporters and one or more producers. The cash-deposit rate assigned to an exporter will apply only to merchandise both exported by the firm in question *and* produced by a firm that supplied the exporter during the period of investigation.[44]

Distribution of Copies of the AD Petitions

In accordance with section 732(b)(3)(A) of the Act and 19 CFR 351.202(f), copies of the public version of the AD Petitions have been provided to the governments of Armenia, Brazil, Oman, Russia, and Turkey via ACCESS. To the extent practicable, we will attempt to provide a copy of the public version of the AD Petitions to each exporter named in the AD Petitions, as provided under 19 CFR 351.203(c)(2).

ITC Notification

Commerce will notify the ITC of our initiation, as required by section 732(d) of the Act.

Preliminary Determinations by the ITC

The ITC will preliminarily determine, within 45 days after the date on which the AD Petitions were filed, whether there is a reasonable indication that imports of aluminum foil from Armenia, Brazil, Oman, Russia, and Turkey are materially injuring, or threatening material injury to, a U.S. industry.[45] A negative ITC determination for any country will result in the investigation being terminated with respect to that country.[46] Otherwise, these AD investigations will proceed according to statutory and regulatory time limits.

Submission of Factual Information

Factual information is defined in 19 CFR 351.102(b)(21) as: (i) Evidence submitted in response to questionnaires; (ii) evidence submitted in support of allegations; (iii) publicly available information to value factors under 19 CFR 351.408(c) or to measure the adequacy of remuneration under 19 CFR 351.511(a)(2); (iv) evidence placed on the record by Commerce; and (v) evidence other than factual information described in (i)–(iv). Section 351.301(b) of Commerce's regulations requires any party, when submitting factual information, to specify under which subsection of 19 CFR 351.102(b)(21) the information is being submitted[47] and, if the information is submitted to rebut, clarify, or correct factual information already on the record, to provide an explanation identifying the information already on the record that the factual information seeks to rebut, clarify, or correct.[48] Time limits for the submission of factual information are addressed in 19 CFR 351.301, which provides specific time limits based on the type of factual information being submitted. Interested parties should review the regulations prior to submitting factual information in these investigations.

Particular Market Situation Allegation

Section 773(e) of the Act addresses the concept of particular market situation for purposes of CV, stating that ''if a particular market situation exists such that the cost of materials and fabrication or other processing of any kind does not accurately reflect the cost of production in the ordinary course of trade, the administering authority may use another calculation methodology under this subtitle or any other calculation methodology.'' When an interested party submits a PMS allegation pursuant to section 773(e) of the Act, Commerce will respond to such a submission consistent with 19 CFR 351.301(c)(2)(v). If Commerce finds that a PMS exists under section 773(e) of the Act, then it will modify its dumping calculations appropriately.

Neither section 773(e) of the Act, nor 19 CFR 351.301(c)(2)(v), set a deadline for the submission of PMS allegations and supporting factual information. However, in order to administer section 773(e) of the Act, Commerce must receive PMS allegations and supporting factual information with enough time to consider the submission. Thus, should an interested party wish to submit a PMS allegation and supporting new factual information pursuant to section 773(e) of the Act, it must do so no later than 20 days after submission of a respondent's initial section D questionnaire response.

Extensions of Time Limits

Parties may request an extension of time limits before the expiration of a time limit established under 19 CFR 351.301, or as otherwise specified by Commerce. In general, an extension request will be considered untimely if it is filed after the expiration of the time limit established under 19 CFR 351.301. For submissions that are due from multiple parties simultaneously, an extension request will be considered untimely if it is filed after 10:00 a.m. ET on the due date. Under certain circumstances, we may elect to specify a different time limit by which extension requests will be considered untimely for submissions which are due from multiple parties simultaneously. In such a case, we will inform parties in a letter or memorandum of the deadline (including a specified time) by which extension requests must be filed to be considered timely. An extension request must be made in a separate, stand-alone submission; under limited circumstances we will grant untimely-filed requests for the extension of time limits. Parties should review *Extension of Time Limits; Final Rule,* 78 FR 57790 (September 20, 2013), available at *http://www.gpo.gov/fdsys/pkg/FR-2013-09-20/html/2013-22853.htm,* prior to submitting factual information in these investigations.

Certification Requirements

Any party submitting factual information in an AD or CVD proceeding must certify to the accuracy and completeness of that information.[49] Parties must use the certification formats provided in 19 CFR 351.303(g).[50] Commerce intends to

[44] *See* Policy Bulletin 05.1 at 6 (emphasis added).

[45] *See* section 733(a) of the Act.

[46] *Id.*

[47] *See* 19 CFR 351.301(b).

[48] *See* 19 CFR 351.301(b)(2).

[49] *See* section 782(b) of the Act.

[50] *See Certification of Factual Information to Import Administration During Antidumping and Countervailing Duty Proceedings,* 78 FR 42678 (July 17, 2013) (*Final Rule*). Answers to frequently asked questions regarding the *Final Rule* are available at *http://enforcement.trade.gov/tlei/notices/factual_info_final_rule_FAQ_07172013.pdf.*

reject factual submissions if the submitting party does not comply with the applicable certification requirements.

Notification to Interested Parties

Interested parties must submit applications for disclosure under APO in accordance with 19 CFR 351.305. Parties wishing to participate in these investigations should ensure that they meet the requirements of 19 CFR 351.103(d) (*e.g.,* by filing the required letter of appearance). Note that Commerce has temporarily modified certain of its requirements for serving documents containing business proprietary information, until further notice.[51]

This notice is issued and published pursuant to sections 732(c)(2) and 777(i) of the Act, and 19 CFR 351.203(c).

Dated: October 19, 2020.

Jeffrey I. Kessler,

Assistant Secretary for Enforcement and Compliance.

Appendix—Scope of the Investigations

The merchandise covered by these investigations is aluminum foil having a thickness of 0.2 mm or less, in reels exceeding 25 pounds, regardless of width. Aluminum foil is made from an aluminum alloy that contains more than 92 percent aluminum. Aluminum foil may be made to ASTM specification ASTM B479, but can also be made to other specifications. Regardless of specification, however, all aluminum foil meeting the scope description is included in the scope, including aluminum foil to which lubricant has been applied to one or both sides of the foil.

Excluded from the scope of these investigations is aluminum foil that is backed with paper, paperboard, plastics, or similar backing materials on one side or both sides of the aluminum foil, as well as etched capacitor foil and aluminum foil that is cut to shape. Where the nominal and actual measurements vary, a product is within the scope if application of either the nominal or actual measurement would place it within the scope based on the definitions set forth above. The products under investigation are currently classifiable under Harmonized Tariff Schedule of the United States (HTSUS) subheadings 7607.11.3000, 7607.11.6090, 7607.11.9030, 7607.11.9060, 7607.11.9090, and 7607.19.6000.

Further, merchandise that falls within the scope of these proceedings may also be entered into the United States under HTSUS subheadings 7606.11.3060, 7606.11.6000, 7606.12.3045, 7606.12.3055, 7606.12.3091, 7606.12.3096, 7606.12.6000, 7606.91.3095, 7606.91.6095, 7606.92.3035, and 7606.92.6095. Although the HTSUS subheadings are provided for convenience and customs purposes, the written description of the scope of these investigations is dispositive.

[FR Doc. 2020–23673 Filed 10–23–20; 8:45 am]

BILLING CODE 3510–DS–P

[51] *See Temporary Rule Modifying AD/CVD Service Requirements Due to COVID–19; Extension of Effective Period,* 85 FR 41363 (July 10, 2020).

DEPARTMENT OF COMMERCE

National Oceanic and Atmospheric Administration

[RTID 0648–XA523]

Fisheries of the South Atlantic; Southeast Data, Assessment, and Review (SEDAR); Public Meeting

AGENCY: National Marine Fisheries Service (NMFS), National Oceanic and Atmospheric Administration (NOAA), Commerce.

ACTION: Notice of SEDAR 66 Workshop for South Atlantic Tilefish.

SUMMARY: The SEDAR 66 stock assessment of the South Atlantic stock of Tilefish will consist of a data scoping webinar, a workshop, and a series of assessment webinars. See **SUPPLEMENTARY INFORMATION**.

DATES: The SEDAR 66 South Atlantic Tilefish Workshop will be held via webinar on from 9 a.m. until 2 p.m. EST each day from November 16–19, 2020. The established times may be adjusted as necessary to accommodate the timely completion of discussion relevant to the assessment process. Such adjustments may result in the meeting being extended from or completed prior to the time established by this notice. Additional SEDAR 66 webinar dates and times will publish in a subsequent issue in the **Federal Register**.

ADDRESSES:

Meeting address: The SEDAR 66 South Atlantic Tilefish Workshop will be held via webinar . The webinar is open to members of the public. Registration is available online at: *https://attendee.gotowebinar.com/register/4013717029443000078.*

SEDAR address: South Atlantic Fishery Management Council, 4055 Faber Place Drive, Suite 201, N. Charleston, SC 29405; *www.sedarweb.org.*

FOR FURTHER INFORMATION CONTACT: Kathleen Howington, SEDAR Coordinator, 4055 Faber Place Drive, Suite 201, North Charleston, SC 29405; phone: (843) 571–4366; email: *Kathleen.howington@safmc.net.*

SUPPLEMENTARY INFORMATION: The Gulf of Mexico, South Atlantic, and Caribbean Fishery Management Councils, in conjunction with NOAA Fisheries and the Atlantic and Gulf States Marine Fisheries Commissions, have implemented the Southeast Data, Assessment and Review (SEDAR) process, a multi-step method for determining the status of fish stocks in the Southeast Region. SEDAR is a three-step process including: (1) Data Workshop; (2) Assessment Process utilizing webinars; and (3) Review Workshop. The product of the Data Workshop is a data report which compiles and evaluates potential datasets and recommends which datasets are appropriate for assessment analyses. The product of the Assessment Process is a stock assessment report which describes the fisheries, evaluates the status of the stock, estimates biological benchmarks, projects future population conditions, and recommends research and monitoring needs. The assessment is independently peer reviewed at the Review Workshop. The product of the Review Workshop is a Summary documenting panel opinions regarding the strengths and weaknesses of the stock assessment and input data. Participants for SEDAR Workshops are appointed by the Gulf of Mexico, South Atlantic, and Caribbean Fishery Management Councils and NOAA Fisheries Southeast Regional Office, Highly Migratory Species Management Division, and Southeast Fisheries Science Center. Participants include: Data collectors and database managers; stock assessment scientists, biologists, and researchers; constituency representatives including fishermen, environmentalists, and non-governmental organizations (NGOs); international experts; and staff of Councils, Commissions, and state and federal agencies.

The items of discussion at the SEDAR 66 South Atlantic Tilefish workshop are as follows:

- Review & resolve data issues, make data recommendations
- Finalize data discussions
- Begin discussion on base model configuration
- Discuss proposed changes to model, sensitivity runs, and projections

Although non-emergency issues not contained in this agenda may come before this group for discussion, those issues may not be the subject of formal action during this meeting. Action will be restricted to those issues specifically identified in this notice and any issues arising after publication of this notice that require emergency action under section 305(c) of the Magnuson-Stevens Fishery Conservation and Management Act, provided the public has been notified of the intent to take final action to address the emergency.

Special Accommodations

This meeting is accessible to people with disabilities. Requests for auxiliary aids should be directed to the SAFMC office (see **ADDRESSES**) at least 10 business days prior to the meeting.

Note: The times and sequence specified in this agenda are subject to change.

Authority: 16 U.S.C. 1801 *et seq.*

Dated: October 21, 2020.

Diane M. DeJames-Daly,

Acting Deputy Director, Office of Sustainable Fisheries, National Marine Fisheries Service.

[FR Doc. 2020–23646 Filed 10–23–20; 8:45 am]

BILLING CODE 3510–22–P

DEPARTMENT OF COMMERCE

National Oceanic and Atmospheric Administration

[RTID 0648–XA534]

South Atlantic Fishery Management Council; Public Meeting

AGENCY: National Marine Fisheries Service (NMFS), National Oceanic and Atmospheric Administration (NOAA), Commerce.

ACTION: Notice of a public meeting.

SUMMARY: The South Atlantic Fishery Management Council (Council) will hold a webinar meeting of its Executive Committee (partially closed session).

DATES: The Executive Committee meeting will be held from 10 a.m. to 12 p.m. on Thursday, November 12, 2020.

ADDRESSES: The meeting will be held via webinar. Webinar registration is required. Details are included in **SUPPLEMENTARY INFORMATION.**

FOR FURTHER INFORMATION CONTACT: Kim Iverson, Public Information Officer, SAFMC; phone: (843) 302–8440 or toll free: (866) SAFMC–10; fax: (843) 769–4520; email: *kim.iverson@safmc.net.*

SUPPLEMENTARY INFORMATION: Meeting information, including the webinar link, agenda, and briefing book materials will be posted on the Council's website at: *http://safmc.net/safmc-meetings/council-meetings/.*

Agenda Items Include

1. Council activity schedules for 2021
2. Council budget for 2021 (partially closed session)

Written comments may be directed to John Carmichael, Executive Director, South Atlantic Fishery Management Council (see *Council address*) or electronically via the Council's website at *http://safmc.net/safmc-meetings/council-meetings/.* Comments will be automatically posted to the website and available for Council consideration. Comments received prior to 9 a.m. on Thursday, November 12, 2020 will be a part of the meeting administrative record. Public comment will also be allowed as part of the meeting agenda.

Although non-emergency issues not contained in this agenda may come before this group for discussion, those issues may not be the subject of formal action during this meeting. Action will be restricted to those issues specifically identified in this notice and any issues arising after publication of this notice that require emergency action under section 305(c) of the Magnuson-Stevens Fishery Conservation and Management Act, provided the public has been notified of the Council's intent to take final action to address the emergency.

Special Accommodation

The meeting is physically accessible to people with disabilities. Requests for auxiliary aids should be directed to the Council office (see **ADDRESSES**) 5 days prior to the meeting.

Note: The times and sequence specified in this agenda are subject to change.

Authority: 16 U.S.C. 1801 *et seq.*

Dated: October 21, 2020.

Diane M. DeJames-Daly,

Acting Deputy Director, Office of Sustainable Fisheries, National Marine Fisheries Service.

[FR Doc. 2020–23647 Filed 10–23–20; 8:45 am]

BILLING CODE 3510–22–P

DEPARTMENT OF COMMERCE

National Oceanic and Atmospheric Administration

[RTID 0648–XA595]

Mid-Atlantic Fishery Management Council (MAFMC); Public Meeting

AGENCY: National Marine Fisheries Service (NMFS), National Oceanic and Atmospheric Administration (NOAA), Commerce.

ACTION: Notice; public meeting.

SUMMARY: The Mid-Atlantic Fishery Management Council's Summer Flounder, Scup, and Black Sea Bass Advisory Panel will hold a public webinar meeting, jointly with the Atlantic States Marine Fisheries Commission's (ASMFC's) Summer Flounder, Scup, and Black Sea Bass Advisory Panel.

DATES: The meeting will be held on Tuesday, November 10, 2020, from 1 p.m. until 4 p.m..

ADDRESSES: The meeting will be held via webinar, which can be accessed at: *http://mafmc.adobeconnect.com/fsb-ap-nov-2020/.* Meeting audio can also be accessed via telephone by dialing 1–800–832–0736 and entering room number 4472108.

Council address: Mid-Atlantic Fishery Management Council, 800 N State Street, Suite 201, Dover, DE 19901; telephone: (302) 674–2331; *www.mafmc.org.*

FOR FURTHER INFORMATION CONTACT: Christopher M. Moore, Ph.D., Executive Director, Mid-Atlantic Fishery Management Council, telephone: (302) 526–5255.

SUPPLEMENTARY INFORMATION: The Mid-Atlantic Fishery Management Council's Summer Flounder, Scup, and Black Sea Bass Advisory Panel will meet via webinar jointly with the Atlantic States Marine Fisheries Commission's Summer Flounder, Scup, and Black Sea Bass Advisory Panel. The purpose of this meeting is to review staff recommendations for 2021 recreational management measures for summer flounder, scup and black sea bass, and to provide Advisory Panel input to the Monitoring Committee, Council, and ASMFC on the 2021 recreational management measures for all three species.

Special Accommodations

The meeting is physically accessible to people with disabilities. Requests for sign language interpretation or other auxiliary aid should be directed to M. Jan Saunders, (302) 526–5251, at least 5 days prior to the meeting date.

Authority: 16 U.S.C. 1801 *et seq.*

Dated: October 21, 2020.

Diane M. DeJames-Daly,

Acting Deputy Director, Office of Sustainable Fisheries, National Marine Fisheries Service.

[FR Doc. 2020–23657 Filed 10–23–20; 8:45 am]

BILLING CODE 3510–22–P

DEPARTMENT OF COMMERCE

National Oceanic and Atmospheric Administration

Agency Information Collection Activities; Submission to the Office of Management and Budget (OMB) for Review and Approval; Comment Request; Prohibited Species Donation Program

The Department of Commerce will submit the following information collection request to the Office of Management and Budget (OMB) for review and clearance in accordance with the Paperwork Reduction Act of 1995, on or after the date of publication

of this notice. We invite the general public and other Federal agencies to comment on proposed, and continuing information collections, which helps us assess the impact of our information collection requirements and minimize the public's reporting burden. Public comments were previously requested via the **Federal Register** on June 24, 2020, during a 60-day comment period. This notice allows for an additional 30 days for public comments.

Agency: National Oceanic and Atmospheric Administration (NOAA), Commerce.

Title: Alaska Prohibited Species Donation Program.

OMB Control Number: 0648–0316.

Form Number(s): None.

Type of Request: Extension of a current information collection.

Number of Respondents: One.

Average Hours per Response: 50 hours.

Total Annual Burden Hours: 17 hours.

Needs and Uses: The prohibited species donation (PSD) program for salmon and halibut has effectively reduced regulatory discard of salmon and halibut by allowing fish that would otherwise be discarded to be donated to needy individuals through tax-exempt organizations. Vessels and processing plants participating in the PSD program voluntarily retain and process salmon and halibut bycatch. An authorized, tax exempt distributor, chosen by the National Marine Fisheries Service (NMFS), is responsible for monitoring retention and processing of fish donated by vessels and processors. The authorized distributor also coordinates processing, storage, transportation, and distribution of salmon and halibut. The PSD program requires an information collection so that NMFS can monitor the authorized distributor's ability to effectively supervise program participants and ensure that donated fish are properly processed, stored, and distributed.

Affected Public: Not-for-profit institutions.

Frequency: Every three years.

Respondent's Obligation: Required to Obtain or Retain Benefits.

Legal Authority: Magnuson-Stevens Fishery Conservation and Management Act.

This information collection request may be viewed at *www.reginfo.gov.* Follow the instructions to view the Department of Commerce collections currently under review by OMB.

Written comments and recommendations for the proposed information collection should be submitted within 30 days of the publication of this notice on the following website *www.reginfo.gov/public/do/PRAMain.* Find this particular information collection by selecting ''Currently under 30-day Review—Open for Public Comments'' or by using the search function and entering either the title of the collection or the OMB Control Number 0648–0316.

Sheleen Dumas,

Department PRA Clearance Officer, Office of the Chief Information Officer, Commerce Department.

[FR Doc. 2020–23628 Filed 10–23–20; 8:45 am]

BILLING CODE 3510–22–P

DEPARTMENT OF COMMERCE

National Oceanic and Atmospheric Administration

Agency Information Collection Activities; Submission to the Office of Management and Budget (OMB) for Review and Approval; Comment Request; West Coast Region Vessel Identification Requirements

The Department of Commerce will submit the following information collection request to the Office of Management and Budget (OMB) for review and clearance in accordance with the Paperwork Reduction Act of 1995, on or after the date of publication of this notice. We invite the general public and other Federal agencies to comment on proposed, and continuing information collections, which helps us assess the impact of our information collection requirements and minimize the public's reporting burden. Public comments were previously requested via the **Federal Register** on June 3, 2020, during a 60-day comment period. This notice allows for an additional 30 days for public comments.

Agency: National Oceanic & Atmospheric Administration (NOAA), Commerce.

Title: West Coast Region Vessel Identification Requirements.

OMB Control Number: 0648–0361.

Form Number(s): None.

Type of Request: Regular submission extension of a current information collection.

Number of Respondents: 1,700.

Average Hours per Response: 45 minutes for non-purse seine vessels less than 400 short tons (362.8 metric tons (mt)) carrying capacity; 1 hour and 30 minutes for purse seine fishing vessels of 400 short tons or more.

Total Annual Burden Hours: 1,284.5.

Needs and Uses: This request is for extension of a current information collection. Regulations at 50 CFR 660.704 require that all commercial fishing vessels with permits issued under authority of the National Marine Fishery Service's (NMFS) Fishery Management Plan for United States (U.S.) West Coast Highly Migratory Species Fisheries display the vessel's official number (U.S. Coast Guard documentation number or state registration number). The numbers must be of a specific size and format and located at specified locations. The official number must be affixed to each vessel subject to this section in block Arabic numerals at least 10 inches (25.40 centimeters in height for vessels more than 25 feet (7.62 meters) but equal to or less than 65 feet (19.81 meters) in length; and 18 inches (45.72 centimeters) in height for vessels longer than 65 feet (19.81 meters) in length. Markings must be legible and of a color that contrasts with the background. The display of the identifying number aids in fishery law enforcement. This requirement does not apply to recreational charter vessels.

Affected Public: Business or other for-profit organizations.

Frequency: Identification markings are required for each vessel.

Respondent's Obligation: Required to Obtain or Retain Benefits, and Mandatory.

Legal Authority: Magnuson-Stevens Fishery Conservation and Management Act.

This information collection request may be viewed at *www.reginfo.gov.* Follow the instructions to view the Department of Commerce collections currently under review by OMB.

Written comments and recommendations for the proposed information collection should be submitted within 30 days of the publication of this notice on the following website *www.reginfo.gov/public/do/PRAMain.* Find this particular information collection by selecting ''Currently under 30-day Review—Open for Public Comments'' or by using the search function and entering either the title of the collection or the OMB Control Number 0648–0361.

Sheleen Dumas,

Department PRA Clearance Officer, Office of the Chief Information Officer, Commerce Department.

[FR Doc. 2020–23627 Filed 10–23–20; 8:45 am]

BILLING CODE 3510–22–P

DEPARTMENT OF COMMERCE

National Oceanic and Atmospheric Administration

[RTID 0648–XA589]

New England Fishery Management Council; Public Meeting

AGENCY: National Marine Fisheries Service (NMFS), National Oceanic and Atmospheric Administration (NOAA), Commerce.

ACTION: Notice; public meeting.

SUMMARY: The New England Fishery Management Council (Council) is scheduling a public meeting of its Scallop Advisory Panel and Plan Development Team via webinar to consider actions affecting New England fisheries in the exclusive economic zone (EEZ). Recommendations from this group will be brought to the full Council for formal consideration and action, if appropriate.

DATES: This meeting will be held on Tuesday, November 10, 2020 at 9 a.m.

ADDRESSES: All meeting participants and interested parties can register to join the webinar at *https://attendee.gotowebinar.com/register/6721165457191966987.*

Council address: New England Fishery Management Council, 50 Water Street, Mill 2, Newburyport, MA 01950.

FOR FURTHER INFORMATION CONTACT: Thomas A. Nies, Executive Director, New England Fishery Management Council; telephone: (978) 465–0492.

SUPPLEMENTARY INFORMATION:

Agenda

The Scallop Advisory Panel and Plan Development Team will discuss Framework 33: In particular review the results of 2020 scallop surveys, and preliminary projections. The primary focus of this meeting will be to develop input on the range of potential specification alternatives for FY 2021 and FY 2022. Framework 33 will set specifications including ABC/ACLs, days-at-sea, access area allocations, total allowable catch for the Northern Gulf of Maine (NGOM) management area, targets for General Category incidental catch, General Category access area trips and trip accounting, and set-asides for the observer and research programs for fishing year 2020 and default specifications for fishing year 2021. Other business may be discussed, as necessary.

Although non-emergency issues not contained in this agenda may come before this group for discussion, those issues may not be the subject of formal action during these meetings. Action will be restricted to those issues specifically listed in this notice and any issues arising after publication of this notice that require emergency action under section 305(c) of the Magnuson-Stevens Act, provided the public has been notified of the Council's intent to take final action to address the emergency.

Special Accommodations

This meeting is physically accessible to people with disabilities. Requests for sign language interpretation or other auxiliary aids should be directed to Thomas A. Nies, Executive Director, at (978) 465–0492, at least 5 days prior to the meeting date. Consistent with 16 U.S.C. 1852, a copy of the recording is available upon request.

Authority: 16 U.S.C. 1801 *et seq.*

Dated: October 21, 2020.

Diane M. DeJames-Daly,

Acting Deputy Director, Office of Sustainable Fisheries, National Marine Fisheries Service.

[FR Doc. 2020–23648 Filed 10–23–20; 8:45 am]

BILLING CODE 3510–22–P

COMMODITY FUTURES TRADING COMMISSION

Agency Information Collection Activities Under OMB Review

AGENCY: Commodity Futures Trading Commission.

ACTION: Notice.

SUMMARY: In compliance with the Paperwork Reduction Act of 1995 (PRA), this notice announces that the Information Collection Request (ICR) abstracted below has been forwarded to the Office of Information and Regulatory Affairs (OIRA), of the Office of Management and Budget (OMB), for review and comment. The ICR describes the nature of the information collection and its expected costs and burden.

DATES: Comments must be submitted on or before November 25, 2020.

ADDRESSES: Written comments and recommendations for the proposed information collection should be submitted within 30 days of this notice's publication to OIRA, at *https://www.reginfo.gov/public/do/PRAMain.* Please find this particular information collection by selecting ''Currently under 30-day Review—Open for Public Comments'' or by using the website's search function. Comments can be entered electronically by clicking on the ''comment'' button next to the information collection on the ''OIRA Information Collections Under Review'' page, or the ''View ICR—Agency Submission'' page. A copy of the supporting statement for the collection of information discussed herein may be obtained by visiting *https://www.reginfo.gov/public/do/PRAMain.*

In addition to the submission of comments to *https://Reginfo.gov* as indicated above, a copy of all comments submitted to OIRA may also be submitted to the Commodity Futures Trading Commission (the ''Commission'' or ''CFTC'') by clicking on the ''Submit Comment'' box next to the descriptive entry for OMB Control No. 3038–0092, at *https://comments.cftc.gov/FederalRegister/PublicInfo.aspx*

Or by either of the following methods:

- *Mail:* Christopher Kirkpatrick, Secretary of the Commission, Commodity Futures Trading Commission, Three Lafayette Centre, 1155 21st Street NW, Washington, DC 20581.
- *Hand Delivery/Courier:* Same as Mail above.

All comments must be submitted in English, or if not, accompanied by an English translation. Comments submitted to the Commission should include only information that you wish to make available publicly. If you wish the Commission to consider information that you believe is exempt from disclosure under the Freedom of Information Act, a petition for confidential treatment of the exempt information may be submitted according to the procedures established in § 145.9 of the Commission's regulations.[1] The Commission reserves the right, but shall have no obligation, to review, pre-screen, filter, redact, refuse or remove any or all of your submission from *https://www.cftc.gov* that it may deem to be inappropriate for publication, such as obscene language. All submissions that have been redacted or removed that contain comments on the merits of the ICR will be retained in the public comment file and will be considered as required under the Administrative Procedure Act and other applicable laws, and may be accessible under the Freedom of Information Act.

FOR FURTHER INFORMATION CONTACT: Megan Wallace, Senior Special Counsel, Division of Clearing and Risk, Commodity Futures Trading Commission, (202) 418–5150; email: *mwallace@cftc.gov,* and refer to OMB Control No. 3038–0092.

SUPPLEMENTARY INFORMATION: *Title:* Customer Clearing Documentation and Timing of Acceptance for Clearing

[1] 17 CFR 145.9.

(OMB Control No. 3038–0092). This is a request for extension of a currently approved information collection.

Abstract: Section 4d(c) of the Commodity Exchange Act (''CEA''), as amended by the Dodd-Frank Wall Street and Reform Consumer Protection Act (''Dodd-Frank Act''), directs the Commission to require futures commission merchants (''FCMs'') to implement conflict of interest procedures that address such issues the Commission determines to be appropriate. Similarly, section 4s(j)(5) of the CEA, as added by the Dodd-Frank Act, requires swap dealers (''SDs'') and major swap participants (''MSPs'') to implement conflict of interest procedures that address such issues the Commission determines to be appropriate. Section 4s(j)(5) also requires SDs and MSPs to ensure that any persons providing clearing activities or making determinations as to accepting clearing customers are separated by appropriate informational partitions from persons whose involvement in pricing, trading, or clearing activities might bias their judgment or contravene the core principle of open access. Section 4s(j)(6) of the CEA prohibits a SD or MSP from adopting any process or taking any action that results in any unreasonable restraint on trade or imposes any material anticompetitive burden on trading or clearing, unless necessary or appropriate to achieve the purposes of the Act. Section 2(h)(1)(B)(ii) of the CEA requires that derivatives clearing organization (''DCOs'') rules provide for the nondiscriminatory clearing of swaps executed bilaterally or through an unaffiliated designated contract market or swap execution facility.

To address these provisions, the Commission promulgated regulations that prohibit arrangements involving FCMs, SDs, MSPs, and DCOs that would (a) disclose to an FCM, SD, or MSP the identity of a customer's original executing counterparty (§§ 1.72(a), 23.608(a), and 39.12(a)(1)(vi)); (b) limit the number of counterparties with whom a customer may enter into a trade (§§ 1.72(b), 23.608(b), and 39.12(a)(1)(vi)); (c) restrict the size of the position a customer may take with any individual counterparty, apart from an overall credit limit for all positions held by the customer at the FCM (§§ 1.72(c), 23.608(c), and 39.12(a)(1)(vi)); (d) impair a customer's access to execution of a trade on terms that have a reasonable relationship to the best terms available (§§ 1.72(d), 23.608(d), and 39.12(a)(1)(vi)); or (e) prevent compliance with specified time frames for acceptance of trades into clearing set forth in 1.74(b), 23.610(b), or 39.12(b)(7) (§§ 1.72(e), 23.608(e), and 39.12(a)(1)(vi)). Additionally, the Commission requires, through regulation 39.12(b)(7)(i)(B), DCOs to coordinate with clearing members to establish prompt processing of trades. Regulations 1.74(a) and 23.610(a) require reciprocal coordination by FCMs, SDs, and MSPs that are clearing members.

Under the above regulations, SDs, MSPs, FCMs, and DCOs are required to develop and maintain written customer clearing documentation and trade processing procedures. Maintenance of contracts, policies, and procedures is prudent business practice. All SDs, MSPs, FCMs, and DCOs maintain documentation consistent with these regulations. The regulations are crucial both for effective risk management and for the efficient operation of trading venues among SDs, MSPs, FCMs, and DCOs. Each of these entities has a general recordkeeping obligation for these requirements under the Commission's regulations (§ 39.20 for DCOs; § 23.606 for SDs and MSPs; and § 1.73 for FCMs).

The information collection burden arising from the regulations primarily is restricted to the costs associated with the affected registrants' obligation to maintain records related to clearing documentation between the customer and the customer's clearing member, and trade processing procedures between DCOs and FCMs, SDs, and MSPs. The information collection obligations are necessary to implement certain provisions of the CEA, including ensuring that registrants exercise effective risk management and for the efficient operation of trading venues among SDs, MSPs, FCMs, and DCOs.

An agency may not conduct or sponsor, and a person is not required to respond to, a collection of information unless it displays a currently valid OMB control number. On August 17, 2020, the Commission published in the **Federal Register** notice of the proposed extension of this information collection and provided 60 days for public comment on the proposed extension, 85 FR 50013 (''60-Day Notice'') The Commission did not receive any comments on the 60-Day Notice.

Burden Statement: The respondent burden for this collection is estimated to be as follows:

Estimated Number of Respondents: 183.

Estimated Average Burden Hours per Respondent: 40.

Estimated Total Annual Burden Hours: 7,320.

Frequency of Collection: Daily, annually, or as needed.

There are no capital costs or operating and maintenance costs associated with this collection.

Authority: 44 U.S.C. 3501 *et seq.*

Dated: October 21, 2020.

Robert Sidman,

Deputy Secretary of the Commission.

[FR Doc. 2020–23671 Filed 10–23–20; 8:45 am]

BILLING CODE 6351–01–P

COMMODITY FUTURES TRADING COMMISSION

Agency Information Collection Activities: Notice of Intent To Extend Collection 3038–0062: Off-Exchange Foreign Currency Transactions

AGENCY: Commodity Futures Trading Commission.

ACTION: Notice.

SUMMARY: The Commodity Futures Trading Commission (''CFTC'' or ''Commission'') is announcing an opportunity for public comment on the proposed renewal of a collection of certain information by the agency. Under the Paperwork Reduction Act (''PRA''), Federal agencies are required to publish notice in the **Federal Register** concerning each proposed collection of information, including each proposed extension of an existing collection of information, and to allow 60 days for public comment. This notice solicits comments on the collection of information provided for by Part 5 of the Commission's regulations under the Commodity Exchange Act (''CEA'') relating to off-exchange foreign currency transactions.

DATES: Comments must be submitted on or before December 28, 2020.

ADDRESSES: You may submit comments, identified by ''OMB Control No. 3038–0062'' by any of the following methods:

- The Agency's website, at *http://comments.cftc.gov/.* Follow the instructions for submitting comments through the website.
- *Mail:* Christopher Kirkpatrick, Secretary of the Commission, Commodity Futures Trading Commission, Three Lafayette Centre, 1155 21st Street NW, Washington, DC 20581.
- *Hand Delivery/Courier:* Same as Mail above.

Please submit your comments using only one method. All comments must be submitted in English, or if not, accompanied by an English translation. Comments will be posted as received to *https://www.cftc.gov.*

FOR FURTHER INFORMATION CONTACT: Gregory Scopino, Special Counsel, Division of Swap Dealer & Intermediary Oversight, Commodity Futures Trading Commission, (202) 418–5175; email: *gscopino@cftc.gov.*

SUPPLEMENTARY INFORMATION: Under the PRA, 44 U.S.C. 3501 *et seq.,* Federal agencies must obtain approval from the Office of Management and Budget (OMB) for each collection of information they conduct or sponsor. ''Collection of Information'' is defined in 44 U.S.C. 3502(3) and 5 CFR 1320.3 and includes agency requests or requirements that members of the public submit reports, keep records, or provide information to a third party. Section 3506(c)(2)(A) of the PRA, 44 U.S.C. 3506(c)(2)(A), requires Federal agencies to provide a 60-day notice in the **Federal Register** concerning each proposed collection of information before submitting the collection to OMB for approval. To comply with this requirement, the CFTC is publishing notice of the proposed collection of information listed below. An agency may not conduct or sponsor, and a person is not required to respond to, a collection of information unless it displays a currently valid OMB control number.

Title: Off-Exchange Foreign Currency Transactions (OMB Control No. 3038–0062). This is a request for an extension of a currently approved information collection.

Abstract: Part 5 of the Commission's regulations under the CEA establishes rules applicable to retail foreign exchange dealers (''RFEDs''), futures commission merchants (''FCMs''), introducing brokers (''IBs''), commodity trading advisors (''CTAs''), and commodity pool operators (''CPOs'') engaged in the offer and sale of off-exchange forex contracts to retail customers. Specifically:

- Regulation 5.5 requires RFEDs, FCMs, and IBs to distribute risk disclosure statements to new retail forex customers.
- Regulation 5.6 requires RFEDs and FCMs to report any failures to maintain the minimum capital required by Commission regulations.
- Regulation 5.8 requires RFEDs and FCMs to calculate their total retail forex obligation.
- Regulation 5.10 requires RFEDs to maintain and preserve certain risk assessment documentation.
- Regulation 5.11(a)(1) requires RFEDs to submit certain risk assessment documentation to the Commission within 60 days of the effective date of their registration.
- Regulation 5.11(a)(2) requires RFEDs to submit certain financial documentation to the Commission within 105 calendar days of the end of each fiscal year. RFEDs must also submit additional information, if requested, regarding affiliates' financial impact on an RFED's organizational structure.
- Regulation 5.12(a) requires RFED applicants to submit a Form 1–FR–FCM concurrently with their registration application.
- Regulation 5.12(b) requires registered RFEDs to file a Form 1–FR–FCM on a monthly and annual basis.
- Regulation 5.12(g) states that, in the event that an RFED cannot file its Form 1–FR–FCM for any period within the time specified in Regulation 5.12(b), the RFED may file an application for an extension of time with its self-regulatory organization.
- Regulation 5.13(a) requires RFEDs and FCMs to provide monthly account statements to their customers.
- Regulation 5.13(b) requires RFEDs and FCMs to provide confirmation statements to their customers within one business day after the execution of any retail forex or forex option transaction.
- Regulation 5.14 requires RFEDs and FCMs to maintain current ledgers of each transaction affecting its asset, liability, income, expense and capital accounts.
- Regulation 5.18(g) requires each RFED, FCM, CPO, CTA, and IB subject to part 5 to maintain a record of all communications received that give rise to possible violations of the Act, rules, regulations or orders thereunder related to their retail forex business.
- Regulation 5.18(i) requires each RFED and FCM to prepare and maintain on a quarterly basis a calculation of non-discretionary retail forex customer accounts open for any period of time during the quarter that were profitable, and the percentage of such accounts that were not profitable.
- Regulation 5.18(j) requires the CCO of each RFED and FCM to certify annually that the firm has in place processes to establish, maintain, review, modify and test policies and procedures reasonably designed to achieve compliance with the Act, rules, regulations and orders thereunder.
- Regulation 5.19 requires each RFED, FCM, CPO, CTA, and IB subject to part 5 to submit to the Commission copies of any dispositive or partially dispositive decision for which a notice of appeal has been filed in any material legal proceeding (1) to which the firm is a party to or to which its property or assets is subject with respect to retail forex transactions, or (2) instituted against any person who is a principal of the firm arising from conduct in such person's capacity as a principal of that firm.
- Regulation 5.20 requires RFEDs, FCMs and IBs to submit documentation requested pursuant to certain types of special calls by the Commission.
- Regulation 5.23 requires RFEDs, FCMs and IBs to notify the Commission regarding bulk transfers and bulk liquidations of customer accounts.

The rules establish reporting and recordkeeping requirements that are necessary to implement the provisions of the Food, Conservation, and Energy Act of 2008 [1] regarding off-exchange transactions in foreign currency with members of the public. The rules are intended to promote customer protection by providing safeguards against irresponsible or fraudulent business practices.[2]

With respect to the collection of information, the CFTC invites comments on:

- Whether the proposed collection of information is necessary for the proper performance of the functions of the Commission, including whether the information will have a practical use;
- The accuracy of the Commission's estimate of the burden of the proposed collection of information, including the validity of the methodology and assumptions used;
- Ways to enhance the quality, usefulness, and clarity of the information to be collected; and
- Ways to minimize the burden of collection of information on those who are to respond, including through the use of appropriate automated electronic, mechanical, or other technological collection techniques or other forms of information technology; *e.g.,* permitting electronic submission of responses.

You should submit only information that you wish to make available publicly. If you wish the Commission to consider information that you believe is exempt from disclosure under the Freedom of Information Act, a petition for confidential treatment of the exempt information may be submitted according to the procedures established in § 145.9 of the Commission's regulations.[3]

The Commission reserves the right, but shall have no obligation, to review, pre-screen, filter, redact, refuse or remove any or all of your submission from *http://www.cftc.gov* that it may

[1] Public Law 110–246, 122 Stat. 1651, 2189–220 (2008).

[2] See Regulation of Off-Exchange Retail Foreign Exchange Transactions and Intermediaries, 75 FR 55410, 55416 (Sept. 10, 2010).

[3] 17 CFR 145.9.

deem to be inappropriate for publication, such as obscene language. All submissions that have been redacted or removed that contain comments on the merits of the ICR will be retained in the public comment file and will be considered as required under the Administrative Procedure Act and other applicable laws, and may be accessible under the Freedom of Information Act.

Burden Statement: The Commission is revising its estimate of the burden for this collection for 146 respondents, which include RFEDs, FCMs, IBs, CPOs, and CTAs. The respondent burden for this collection is estimated to be as follows:

Estimated Number of Respondents: 146.

Estimated Average Burden Hours per Respondent: 2,865.[4]

Estimated Total Annual Burden Hours: 418,286.

Frequency of Collection: As applicable.

There are no capital costs or operating and maintenance costs associated with this collection.

(Authority: 44 U.S.C. 3501 *et seq.*)

Dated: October 21, 2020.

Robert Sidman,

Deputy Secretary of the Commission.

[FR Doc. 2020–23669 Filed 10–23–20; 8:45 am]

BILLING CODE 6351–01–P

[4] This figure has been rounded to the nearest one: 2,864.972 to 2865.

COMMODITY FUTURES TRADING COMMISSION

Agency Information Collection Activities Under OMB Review

AGENCY: Commodity Futures Trading Commission.

ACTION: Notice.

SUMMARY: In compliance with the Paperwork Reduction Act of 1995 (PRA), this notice announces that the Information Collection Request (ICR) abstracted below has been forwarded to the Office of Information and Regulatory Affairs (OIRA), of the Office of Management and Budget (OMB), for review and comment. The ICR describes the nature of the information collection and its expected costs and burden.

DATES: Comments must be submitted on or before November 25, 2020.

ADDRESSES: Written comments and recommendations for the proposed information collection should be submitted within 30 days of this notice's publication to OIRA, at *https://www.reginfo.gov/public/do/PRAMain.* Please find this particular information collection by selecting ''Currently under 30-day Review—Open for Public Comments'' or by using the website's search function. Comments can be entered electronically by clicking on the ''comment'' button next to the information collection on the ''OIRA Information Collections Under Review'' page, or the ''View ICR—Agency Submission'' page. A copy of the supporting statement for the collection of information discussed herein may be obtained by visiting *https://www.reginfo.gov/public/do/PRAMain.*

In addition to the submission of comments to *https://Reginfo.gov* as indicated above, a copy of all comments submitted to OIRA may also be submitted to the Commodity Futures Trading Commission (the ''Commission'' or ''CFTC'') by clicking on the ''Submit Comment'' box next to the descriptive entry for OMB Control No. 3038–0097, at *https://comments.cftc.gov/FederalRegister/PublicInfo.aspx.*

Or by either of the following methods:

- *Mail:* Christopher Kirkpatrick, Secretary of the Commission, Commodity Futures Trading Commission, Three Lafayette Centre, 1155 21st Street NW, Washington, DC 20581.
- *Hand Delivery/Courier:* Same as Mail above.

All comments must be submitted in English, or if not, accompanied by an English translation. Comments submitted to the Commission should include only information that you wish to make available publicly. If you wish the Commission to consider information that you believe is exempt from disclosure under the Freedom of Information Act, a petition for confidential treatment of the exempt information may be submitted according to the procedures established in § 145.9 of the Commission's regulations.[1] The Commission reserves the right, but shall have no obligation, to review, pre-screen, filter, redact, refuse or remove any or all of your submission from *https://www.cftc.gov* that it may deem to be inappropriate for publication, such as obscene language. All submissions that have been redacted or removed that contain comments on the merits of the ICR will be retained in the public comment file and will be considered as required under the Administrative Procedure Act and other applicable laws, and may be accessible under the Freedom of Information Act.

FOR FURTHER INFORMATION CONTACT: Megan Wallace, Senior Special Counsel, Division of Clearing and Risk, Commodity Futures Trading Commission, (202) 418–5150; email: *mwallace@cftc.gov,* and refer to OMB Control No. 3038–0097.

[1] 17 CFR 145.9.

SUPPLEMENTARY INFORMATION: *Title:* Process for Review of Swaps for Mandatory Clearing (OMB Control No. 3038–0097). This is a request for extension of a currently approved information collection.

Abstract: The Commodity Exchange Act and Commission regulations require a derivatives clearing organization (''DCO'') that wishes to accept a swap for clearing to be eligible to clear the swap and to submit the swap to the Commission for a determination as to whether the swap is required to be cleared. Commission Regulation 39.5 sets forth the process for these submissions. The Commission will use the information in this collection to determine whether a DCO that wishes to accept a swap for clearing is eligible to clear the swap and whether the swap should be required to be cleared.

An agency may not conduct or sponsor, and a person is not required to respond to, a collection of information unless it displays a currently valid OMB control number. On August 17, 2020, the Commission published in the **Federal Register** notice of the proposed extension of this information collection and provided 60 days for public comment on the proposed extension, 85 FR 50012 (''60-Day Notice'') The Commission did not receive any comments on the 60-Day Notice.

Burden Statement: The respondent burden for this collection is estimated to be as follows:

Estimated Number of Respondents: 15.

Estimated Average Burden Hours per Respondent: 40.

Estimated Total Annual Burden Hours: 600.

Frequency of Collection: On occasion.[2]

There are no capital costs or operating and maintenance costs associated with this collection.

(Authority: 44 U.S.C. 3501 *et seq.*)

Dated: October 21, 2020.

Robert Sidman,

Deputy Secretary of the Commission.

[FR Doc. 2020–23670 Filed 10–23–20; 8:45 am]

BILLING CODE 6351–01–P

[2] While the 60-day Notice indicates ''daily, annual, and on occasion,'' the frequency of information collection is only ''on occasion'' based on current data.

DEPARTMENT OF EDUCATION

[Docket No.: ED–2020–SCC–0127]

Agency Information Collection Activities; Submission to the Office of Management and Budget for Review and Approval; Comment Request; PLUS Adverse Credit Reconsideration Loan Counseling

AGENCY: Federal Student Aid, Department of Education (ED).

ACTION: Notice.

SUMMARY: In accordance with the Paperwork Reduction Act of 1995, ED is proposing a revision of a currently approved collection.

DATES: Interested persons are invited to submit comments on or before November 25, 2020.

ADDRESSES: Written comments and recommendations for proposed information collection requests should be sent within 30 days of publication of this notice to *www.reginfo.gov/public/do/PRAMain.* Find this particular information collection request by selecting ''Department of Education'' under ''Currently Under Review,'' then check ''Only Show ICR for Public Comment'' checkbox.

FOR FURTHER INFORMATION CONTACT: For specific questions related to collection activities, please contact Beth Grebeldinger, 202–377–4018.

SUPPLEMENTARY INFORMATION: The Department of Education (ED), in accordance with the Paperwork Reduction Act of 1995 (PRA) (44 U.S.C. 3506(c)(2)(A)), provides the general public and Federal agencies with an opportunity to comment on proposed, revised, and continuing collections of information. This helps the Department assess the impact of its information collection requirements and minimize the public's reporting burden. It also helps the public understand the Department's information collection requirements and provide the requested data in the desired format. ED is soliciting comments on the proposed information collection request (ICR) that is described below. The Department of Education is especially interested in public comment addressing the following issues: (1) Is this collection necessary to the proper functions of the Department; (2) will this information be processed and used in a timely manner; (3) is the estimate of burden accurate; (4) how might the Department enhance the quality, utility, and clarity of the information to be collected; and (5) how might the Department minimize the burden of this collection on the respondents, including through the use of information technology. Please note that written comments received in response to this notice will be considered public records.

Title of Collection: PLUS Adverse Credit Reconsideration Loan Counseling.

OMB Control Number: 1845–0129.

Type of Review: A revision of a currently approved collection.

Respondents/Affected Public: Individuals or Households.

Total Estimated Number of Annual Responses: 142,824.

Total Estimated Number of Annual Burden Hours: 107,119.

Abstract: Section 428B(a)(1)(A) of the Higher Education Act of 1965, as amended (HEA), provides that to be eligible to receive a Federal PLUS Loan under the Federal Family Education Loan (FFEL) Program, the applicant must not have an adverse credit history, as determined pursuant to regulations promulgated by the Secretary. In accordance with section 455(a)(1) of the HEA, this same eligibility requirement applies to applicants for PLUS loans under the Direct Loan Program. Since July 1, 2010 there have been no new FFEL Program loans originated and the Direct Loan Program is the only Federal loan program that offers Federal PLUS Loans.

The adverse credit history section of the eligibility regulations in 34 CFR 685.200(b) and (c) were updated in 2014 by the Department of Education (the Department) when a review of and a change to the regulations was made. Specifically, an applicant for a PLUS loan who is determined to have an adverse credit history must complete loan counseling offered by the Secretary before receiving the Federal PLUS loan.

The Department is requesting a revision to the information collection regarding the adverse credit history regulations in 34 CFR 685.200(b) and (c) and the burden these changes create for Federal PLUS loan borrowers, both parent and graduate/professional students.

Dated: October 21, 2020.

Kate Mullan,

PRA Coordinator, Strategic Collections and Clearance, Governance and Strategy Division, Office of Chief Data Officer, Office of Planning, Evaluation and Policy Development.

[FR Doc. 2020–23659 Filed 10–23–20; 8:45 am]

BILLING CODE 4000–01–P

DEPARTMENT OF ENERGY

Federal Energy Regulatory Commission

Combined Notice of Filings

Take notice that the Commission has received the following Natural Gas Pipeline Rate and Refund Report filings:

Docket Numbers: RP20–1193–002.
Applicants: Paiute Pipeline Company.
Description: Tariff Amendment: Non-Conforming TSAs Amendment Filing #2 to be effective 12/1/2019.
Filed Date: 10/19/20.
Accession Number: 20201019–5066.
Comments Due: 5 p.m. ET 10/26/20.

Docket Numbers: RP21–50–001.
Applicants: Iroquois Gas Transmission System, L.P.
Description: Tariff Amendment: 101920 Negotiated Rates—Castleton Commodities R–4010–26 (Amendment) to be effective 12/1/2020.
Filed Date: 10/19/20.
Accession Number: 20201019–5055.
Comments Due: 5 p.m. ET 11/2/20.

The filings are accessible in the Commission's eLibrary system (*https://elibrary.ferc.gov/idmws/search/fercgensearch.asp*) by querying the docket number.

Any person desiring to intervene or protest in any of the above proceedings must file in accordance with Rules 211 and 214 of the Commission's Regulations (18 CFR 385.211 and 385.214) on or before 5:00 p.m. Eastern time on the specified date(s). Protests may be considered, but intervention is necessary to become a party to the proceeding.

eFiling is encouraged. More detailed information relating to filing requirements, interventions, protests, service, and qualifying facilities filings can be found at: *http://www.ferc.gov/docs-filing/efiling/filing-req.pdf.* For other information, call (866) 208–3676 (toll free). For TTY, call (202) 502–8659.

Dated: October 20, 2020.

Nathaniel J. Davis, Sr.,

Deputy Secretary.

[FR Doc. 2020–23636 Filed 10–23–20; 8:45 am]

BILLING CODE 6717–01–P

DEPARTMENT OF ENERGY

Federal Energy Regulatory Commission

[Docket No. CP21–1–000]

Notice of Application and Establishing Intervention Deadline; Golden Pass Pipeline LLC

Take notice that on October 2, 2020, Golden Pass Pipeline LLC (Golden Pass

Pipeline), 811 Louisiana Street, Suite 1400, Houston, Texas 77002, filed an application under section 7(c) of the Natural Gas Act (NGA), and Part 157 of the Commission's regulations requesting an amendment to the authorization granted in the Commission's December 21, 2016 Order [1] for the application filed in Docket No. CP14–518–000. The proposed Compressor Relocation and Modification Project (Project) entails relocation of and modifications to certain facilities approved in the December 2016 Order to enable Golden Pass Pipeline to transport domestically sourced natural gas to the export terminal facilities of Golden Pass LNG Terminal LLC (Golden Pass LNG), which are currently under construction, for liquefaction and export.

The Compression Relocation and Modification Project consists of the following: (1) Relocation of an authorized compressor station from Milepost 66 to Milepost 69 on the Golden Pass Pipeline system; (2) additional compression at the relocated compressor station; (3) establishment of a new interconnection and associated meter station near Milepost 69 to support an interconnect with the proposed interstate pipeline to be constructed and operated by Enable Gulf Run Transmission, LLC (Gulf Run), (4) removal of any bi-directional piping modification to the Interconnect for Tennessee Gas Pipeline, (5) elimination of the proposed and approved 24-inch diameter looping facilities between MP 63 and MP 66 in Calcasieu Parish, Louisiana (Calcasieu Loop), to reflect the relocation of the MP 63 Compressor Station and the elimination of Tennessee Gas Pipeline Company, L.L.C. (Tennessee Gas) Gas as an input source to Golden Pass Pipeline; and (6) minor modifications to existing interconnections at Milepost 66 and Milepost 68. Golden Pipeline Pass estimates the total cost of the Project to be $361,345,000 and proposes a new incremental recourse rate to apply to the Project capacity, all as more fully set forth in the application which is on file with the Commission and open for public inspection.

Golden Pass Pipeline's application states that a water quality certificate under section 401 of the Clean Water Act is required for the project from Louisiana Department of Environmental Quality, Water Quality Division. The request for certification must be submitted to the certifying agency and to the Commission concurrently. Proof of the certifying agency's receipt date must be filed no later than five (5) days after the request is submitted to the certifying agency.

In addition to publishing the full text of this document in the **Federal Register**, the Commission provides all interested persons an opportunity to view and/or print the contents of this document via the internet through the Commission's Home Page (*http://ferc.gov*) using the ''eLibrary'' link. Enter the docket number excluding the last three digits in the docket number field to access the document. At this time, the Commission has suspended access to the Commission's Public Reference Room, due to the proclamation declaring a National Emergency concerning the Novel Coronavirus Disease (COVID–19), issued by the President on March 13, 2020. For assistance, contact the Federal Energy Regulatory Commission at *FERCOnlineSupport@ferc.gov* or call toll-free, (886) 208–3676 or TYY, (202) 502–8659.

Any questions regarding the proposed project should be directed to Kevin M. Sweeney, Legal Counsel, Law Office of Kevin M. Sweeney, 1625 K Street NW, Suite 1100, Washington, DC 20006 by phone at (202) 609–7709, or by email at *ksweeney@kmsenergylaw.com.*

Pursuant to Section 157.9 of the Commission's Rules of Practice and Procedure,[2] within 90 days of this Notice the Commission staff will either: Complete its environmental review and place it into the Commission's public record (eLibrary) for this proceeding; or issue a Notice of Schedule for Environmental Review. If a Notice of Schedule for Environmental Review is issued, it will indicate, among other milestones, the anticipated date for the Commission staff's issuance of the final environmental impact statement (FEIS) or environmental assessment (EA) for this proposal. The filing of an EA in the Commission's public record for this proceeding or the issuance of a Notice of Schedule for Environmental Review will serve to notify federal and state agencies of the timing for the completion of all necessary reviews, and the subsequent need to complete all federal authorizations within 90 days of the date of issuance of the Commission staff's FEIS or EA.

Public Participation

There are two ways to become involved in the Commission's review of this project: You can file comments on the project, and you can file a motion to intervene in the proceeding. There is no fee or cost for filing comments or intervening. The deadline for filing a motion to intervene is 5:00 p.m. Eastern Time on November 9, 2020.

Comments

Any person wishing to comment on the project may do so. Comments may include statements of support or objections to the project as a whole or specific aspects of the project. The more specific your comments, the more useful they will be. To ensure that your comments are timely and properly recorded, please submit your comments on or before November 9, 2020.

There are three methods you can use to submit your comments to the Commission. In all instances, please reference the Project docket number CP21–1–000 in your submission.

(1) You may file your comments electronically by using the eComment feature, which is located on the Commission's website at *www.ferc.gov* under the link to Documents and Filings. Using eComment is an easy method for interested persons to submit brief, text-only comments on a project;

(2) You may file your comments electronically by using the eFiling feature, which is located on the Commission's website (*www.ferc.gov*) under the link to Documents and Filings. With eFiling, you can provide comments in a variety of formats by attaching them as a file with your submission. New eFiling users must first create an account by clicking on eRegister. You will be asked to select the type of filing you are making; first select General and then select Comment on a Filing; or

(3) You can file a paper copy of your comments by mailing them to the following address below.[3] Your written comments must reference the Project docket number (CP21–1–000).

Kimberly D. Bose, Secretary, Federal Energy Regulatory Commission, 888 First Street NE, Washington, DC 20426

The Commission encourages electronic filing of comments (options 1 and 2 above) and has eFiling staff available to assist you at (202) 502–8258 or *FercOnlineSupport@ferc.gov.*

[1] *Golden Pass Products LLC and Golden Pass Pipeline LLC,* 157 FERC 61,222 (2016). The December 2016 Order authorized Golden Pass Products, LLC (Golden Pass Products) to construct and operate the Section 3 export facilities. Golden Pass LNG subsequently acquired Golden Pass Products' authorization by merger. *Golden Pass LNG Terminal LLC and Golden Pass Products LLC,* 165 FERC 61,261 (2018).

[2] 18 CFR 157.9.

[3] Hand delivered submissions in docketed proceedings should be delivered to Health and Human Services, 12225 Wilkins Avenue, Rockville, Maryland 20852.

Persons who comment on the environmental review of this project will be placed on the Commission's environmental mailing list, and will receive notification when the environmental documents (EA or EIS) are issued for this project and will be notified of meetings associated with the Commission's environmental review process.

The Commission considers all comments received about the project in determining the appropriate action to be taken. However, the filing of a comment alone will not serve to make the filer a party to the proceeding. To become a party, you must intervene in the proceeding. For instructions on how to intervene, see below.

Interventions

Any person, which includes individuals, organizations, businesses, municipalities, and other entities,[4] has the option to file a motion to intervene in this proceeding. Only intervenors have the right to request rehearing of Commission orders issued in this proceeding and to subsequently challenge the Commission's orders in the U.S. Circuit Courts of Appeal.

To intervene, you must submit a motion to intervene to the Commission in accordance with Rule 214 of the Commission's Rules of Practice and Procedure [5] and the regulations under the NGA [6] by the intervention deadline for the project, which is November 9, 2020. As described further in Rule 214, your motion to intervene must state, to the extent known, your position regarding the proceeding, as well as the your interest in the proceeding. [For an individual, this could include your status as a landowner, ratepayer, resident of an impacted community, or recreationist. You do not need to have property directly impacted by the project in order to intervene.] For more information about motions to intervene, refer to the FERC website at *https://www.ferc.gov/resources/guides/how-to/intervene.asp.*

There are two ways to submit your motion to intervene. In both instances, please reference the Project docket number CP21–1–000 in your submission.

(1) You may file your motion to intervene by using the Commission's eFiling feature, which is located on the Commission's website (*www.ferc.gov*) under the link to Documents and Filings. New eFiling users must first create an account by clicking on eRegister. You will be asked to select the type of filing you are making; first select General and then select Intervention. The eFiling feature includes a document-less intervention option; for more information, visit *https://www.ferc.gov/docs-filing/efiling/document-less-intervention.pdf;* or

(2) You can file a paper copy of your motion to intervene, along with three copies, by mailing the documents to the address below [7]. Your motion to intervene must reference the Project docket number CP21–1–000.

Kimberly D. Bose, Secretary, Federal Energy Regulatory Commission, 888 First Street NE, Washington, DC 20426

The Commission encourages electronic filing of motions to intervene (option 1 above) and has eFiling staff available to assist you at (202) 502–8258 or *FercOnlineSupport@ferc.gov.*

Motions to intervene must be served on the applicant either by mail or email at: 1625 K Street NW, Suite 1100, Washington, DC 20006 or at *ksweeney@kmsenergylaw.com.* Any subsequent submissions by an intervenor must be served on the applicant and all other parties to the proceeding. Contact information for parties can be downloaded from the service list at the eService link on FERC Online. Service can be via email with a link to the document.

All timely, unopposed [8] motions to intervene are automatically granted by operation of Rule 214(c)(1).[9] Motions to intervene that are filed after the intervention deadline are untimely, and may be denied. Any late-filed motion to intervene must show good cause for being late and must explain why the time limitation should be waived and provide justification by reference to factors set forth in Rule 214(d) of the Commission's Rules and Regulations.[10] A person obtaining party status will be placed on the service list maintained by the Secretary of the Commission and will receive copies (paper or electronic) of all documents filed by the applicant and by all other parties.

Tracking the Proceeding

Throughout the proceeding, additional information about the project will be available from the Commission's Office of External Affairs, at (866) 208–FERC, or on the FERC website at *www.ferc.gov* using the eLibrary link as described above. The eLibrary link also provides access to the texts of all formal documents issued by the Commission, such as orders, notices, and rulemakings.

In addition, the Commission offers a free service called eSubscription which allows you to keep track of all formal issuances and submittals in specific dockets. This can reduce the amount of time you spend researching proceedings by automatically providing you with notification of these filings, document summaries, and direct links to the documents. For more information and to register, go to *www.ferc.gov/docs-filing/esubscription.asp.*

Intervention Deadline: 5:00 p.m. Eastern Time on November 9, 2020.

Dated: October 19, 2020.

Nathaniel J. Davis, Sr.,

Deputy Secretary.

[FR Doc. 2020–23640 Filed 10–23–20; 8:45 am]

BILLING CODE 6717–01–P

[4] 18 CFR 385.102(d).

[5] 18 CFR 385.214.

[6] 18 CFR 157.10.

[7] Hand delivered submissions in docketed proceedings should be delivered to Health and Human Services, 12225 Wilkins Avenue, Rockville, Maryland 20852.

[8] The applicant has 15 days from the submittal of a motion to intervene to file a written objection to the intervention.

[9] 18 CFR 385.214(c)(1).

[10] 18 CFR 385.214(b)(3) and (d).

DEPARTMENT OF ENERGY

Federal Energy Regulatory Commission

Combined Notice of Filings #1

Take notice that the Commission received the following electric corporate filings:

Docket Numbers: EC21–9–000.
Applicants: Wind Wall 1 LLC, Cubico Wind Wall Holdings, LLC.
Description: Application for Authorization Under Section 203 of the Federal Power Act, et al.
Filed Date: 10/19/20.
Accession Number: 20201019–5121.
Comments Due: 5 p.m. ET 11/9/20.

Take notice that the Commission received the following electric rate filings:

Docket Numbers: ER12–1933–012; ER12–1934–010.
Applicants: Interstate Power and Light Company, Wisconsin Power and Light Company.
Description: Notification of Change in Status of Interstate Power and Light Company, et al.
Filed Date: 10/16/20.
Accession Number: 20201016–5259.
Comments Due: 5 p.m. ET 11/6/20.

Docket Numbers: ER19–2546–001.
Applicants: Midcontinent Independent System Operator, Inc.
Description: Midcontinent Independent System Operator, Inc. submits tariff filing per 35.19a(b): Refund Report Tuscola Wind II to be effective N/A.

Filed Date: 10/16/20.
Accession Number: 20201016–5230.
Comments Due: 5 p.m. ET 11/6/20.

Docket Numbers: ER20–1863–002.
Applicants: Ingenco Wholesale Power, L.L.C.
Description: Tariff Amendment: Response to Deficiency Letter in Docket ER20–1863 to be effective 6/1/2020.
Filed Date: 10/20/20.
Accession Number: 20201020–5002.
Comments Due: 5 p.m. ET 11/10/20.

Docket Numbers: ER20–2591–001.
Applicants: Midcontinent Independent System Operator, Inc.
Description: Tariff Amendment: 2020–10–20_Deficiency Response to Aggregator of Retail Customers (ARCs) Filing to be effective 9/30/2020.
Filed Date: 10/20/20.
Accession Number: 20201020–5068.
Comments Due: 5 p.m. ET 11/10/20.

Docket Numbers: ER21–145–000.
Applicants: Tri-State Generation and Transmission Association, Inc.
Description: § 205(d) Rate Filing: Filing of Rate Schedule FERC Nos. 313 and 314 to be effective 10/20/2020.
Filed Date: 10/19/20.
Accession Number: 20201019–5085.
Comments Due: 5 p.m. ET 11/9/20.

Docket Numbers: ER21–146–000.
Applicants: Duke Energy Progress, LLC.
Description: § 205(d) Rate Filing: DEP—Recovery of CertainTeed Liquidated Damages Payments to be effective 12/19/2020.
Filed Date: 10/19/20.
Accession Number: 20201019–5091.
Comments Due: 5 p.m. ET 11/9/20.

Docket Numbers: ER21–147–000.
Applicants: El Paso Electric Company.
Description: § 205(d) Rate Filing: Service Agreement No. 337, EPE–TEP Pseudo-Tie Agreement to be effective 10/21/2020.
Filed Date: 10/20/20.
Accession Number: 20201020–5001.
Comments Due: 5 p.m. ET 11/10/20.

Docket Numbers: ER21–148–000.
Applicants: Pacific Gas and Electric Company.
Description: Application for Proposed Cost Allocation Methodology for Standby Electric Customers of Pacific Gas and Electric Company.
Filed Date: 10/16/20.
Accession Number: 20201016–5233.
Comments Due: 5 p.m. ET 11/6/20.

Docket Numbers: ER21–149–000.
Applicants: ColumbiaGrid.
Description: Notice of Cancellation for Rate Schedule No. 1 of ColumbiaGrid.
Filed Date: 10/16/20.
Accession Number: 20201016–5246.
Comments Due: 5 p.m. ET 11/6/20.

Docket Numbers: ER21–150–000.
Applicants: PJM Interconnection, L.L.C.
Description: § 205(d) Rate Filing: Amendment to ISA, SA No. 4463; Queue No. Z2–108 to be effective 4/25/2016.
Filed Date: 10/20/20.
Accession Number: 20201020–5021.
Comments Due: 5 p.m. ET 11/10/20.

Docket Numbers: ER21–151–000.
Applicants: Niagara Mohawk Power Corporation, New York Independent System Operator, Inc.
Description: § 205(d) Rate Filing: E&P Agreement between Niagara Mohawk and LS Power Grid New York Corporation I to be effective 9/21/2020.
Filed Date: 10/20/20.
Accession Number: 20201020–5028.
Comments Due: 5 p.m. ET 11/10/20.

Docket Numbers: ER21–152–000.
Applicants: Public Service Company of Colorado.
Description: eTariff filing per 10 (Replaces 20201019–5077): Amended and Restated Transmission Services Agreement to be effective 1/1/2021.
Filed Date: 10/20/20.
Accession Number: 20201020–5040.
Comments Due: 5 p.m. ET 11/10/20.

Docket Numbers: ER21–154–000.
Applicants: New York Independent System Operator, Inc., New York State Electric & Gas Corporation.
Description: § 205(d) Rate Filing: SGIA 2562 among NYISO, NYSEG and Orangeville Energy Storage to be effective 10/6/2020.
Filed Date: 10/20/20.
Accession Number: 20201020–5042.
Comments Due: 5 p.m. ET 11/10/20.

Docket Numbers: ER21–155–000.
Applicants: Southern California Edison Company.
Description: § 205(d) Rate Filing: DSA Wildcat I Energy Storage LLC—Wildcat I Energy Storage & Cancel Letter Agmt. to be effective 11/15/2020.
Filed Date: 10/20/20.
Accession Number: 20201020–5054.
Comments Due: 5 p.m. ET 11/10/20.

Docket Numbers: ER21–156–000.
Applicants: PJM Interconnection, L.L.C.
Description: § 205(d) Rate Filing: First Revised ISA, Service Agreement No. 4506; Queue No. AF1–026 to be effective 9/21/2020.
Filed Date: 10/20/20.
Accession Number: 20201020–5066.
Comments Due: 5 p.m. ET 11/10/20.

Docket Numbers: ER21–157–000.
Applicants: Tri-State Generation and Transmission Association, Inc.
Description: § 205(d) Rate Filing: Certificate of Concurrence for Amended and Restated Service Agreement No. 814 to be effective 1/1/2021.
Filed Date: 10/20/20.
Accession Number: 20201020–5067.
Comments Due: 5 p.m. ET 11/10/20.

Docket Numbers: ER21–158–000.
Applicants: Aera Energy LLC.
Description: Tariff Cancellation: Notice of Cancellation to be effective 10/21/2020.
Filed Date: 10/20/20.
Accession Number: 20201020–5073.
Comments Due: 5 p.m. ET 11/10/20.

Docket Numbers: ER21–159–000.
Applicants: PJM Interconnection, L.L.C.
Description: § 205(d) Rate Filing: First Revised ISA, Service Agreement No. 4348; Queue No. AF1–027 to be effective 9/21/2020.
Filed Date: 10/20/20.
Accession Number: 20201020–5077.
Comments Due: 5 p.m. ET 11/10/20.

The filings are accessible in the Commission's eLibrary system (*https://elibrary.ferc.gov/idmws/search/fercgensearch.asp*) by querying the docket number.

Any person desiring to intervene or protest in any of the above proceedings must file in accordance with Rules 211 and 214 of the Commission's Regulations (18 CFR 385.211 and 385.214) on or before 5:00 p.m. Eastern time on the specified comment date. Protests may be considered, but intervention is necessary to become a party to the proceeding.

eFiling is encouraged. More detailed information relating to filing requirements, interventions, protests, service, and qualifying facilities filings can be found at: *http://www.ferc.gov/docs-filing/efiling/filing-req.pdf.* For other information, call (866) 208–3676 (toll free). For TTY, call (202) 502–8659.

Dated: October 20, 2020.

Nathaniel J. Davis, Sr.,

Deputy Secretary.

[FR Doc. 2020–23642 Filed 10–23–20; 8:45 am]

BILLING CODE 6717–01–P

DEPARTMENT OF ENERGY

Federal Energy Regulatory Commission

[Docket No. EL21–9–000]

Notice of Complaint; North Carolina Electric Membership Corporation v. Duke Energy Progress, LLC

Take notice that on October 16, 2020, pursuant to sections 206 and 306 of the Federal Power Act, 16 U.S.C. 824e, 825e and Rule 206 of the Federal Energy Regulatory Commission's (Commission)

Rules of Practice and Procedure, 18 CFR 385.206, North Carolina Electric Membership Corporation (Complainant) filed a formal complaint against Duke Energy Progress, LLC, (Respondent) requesting that the Commission find that the Respondent's formula rate is unjust and unreasonable because the 11.0% return on common equity included in the Seventh Amended and Restated Power Supply and Coordination Agreement between Complainant and Respondent is excessive and therefore unjust and unreasonable, all as more fully explained in the complaint.

The Complainant certifies that copies of the complaint were served on the contacts listed for Respondent in the Commission's list of Corporate Officials.

Any person desiring to intervene or to protest this filing must file in accordance with Rules 211 and 214 of the Commission's Rules of Practice and Procedure (18 CFR 385.211, 385.214). Protests will be considered by the Commission in determining the appropriate action to be taken, but will not serve to make protestants parties to the proceeding. Any person wishing to become a party must file a notice of intervention or motion to intervene, as appropriate. The Respondent's answer and all interventions, or protests must be filed on or before the comment date. The Respondent's answer, motions to intervene, and protests must be served on the Complainants.

The Commission strongly encourages electronic filings of comments, protests and interventions in lieu of paper using the eFiling link at *http://www.ferc.gov.* Persons unable to file electronically may mail similar pleadings to the Federal Energy Regulatory Commission, 888 First Street NE, Washington, DC 20426. Hand delivered submissions in docketed proceedings should be delivered to Health and Human Services, 12225 Wilkins Avenue, Rockville, Maryland 20852.

In addition to publishing the full text of this document in the **Federal Register**, the Commission provides all interested persons an opportunity to view and/or print the contents of this document via the internet through the Commission's Home Page (*http://ferc.gov*) using the eLibrary link. Enter the docket number excluding the last three digits in the docket number field to access the document. At this time, the Commission has suspended access to the Commission's Public Reference Room, due to the proclamation declaring a National Emergency concerning the Novel Coronavirus Disease (COVID–19), issued by the President on March 13, 2020. For assistance, contact the Federal Energy Regulatory Commission at *FERCOnlineSupport@ferc.gov,* or call toll-free, (886) 208–3676 or TYY, (202) 502–8659.

Comment Date: 5:00 p.m. Eastern Time on November 5, 2020.

Dated: October 20, 2020.

Kimberly D. Bose,

Secretary.

[FR Doc. 2020–23656 Filed 10–23–20; 8:45 am]

BILLING CODE 6717–01–P

DEPARTMENT OF ENERGY

Federal Energy Regulatory Commission

[Project No. 2615–048]

Brookfield White Pine Hydro, LLC, Merimil Limited Partnership, Eagle Creek Kennebec Hydro, LLC; Notice of Application Accepted for Filing and Soliciting Comments, Motions To Intervene, and Protests

Take notice that the following hydroelectric application has been filed with the Commission and is available for public inspection:

a. *Application Type:* Revised Recreation Facilities Management Plan.

b. *Project No:* 2615–048.

c. *Date Filed:* September 28, 2020.

d. *Applicant:* Brookfield White Pine Hydro, LLC, Merimil Limited Partnership, and Eagle Creek Kennebec Hydro, LLC (licensees).

e. *Name of Project:* Brassua Hydroelectric Project.

f. *Location:* The project is located on the Moose River in Sumerset County, ME.

g. *Filed Pursuant to:* Federal Power Act, 16 U.S.C. 791a–825r.

h. *Applicant Contact:* Kyle Murphy, Brookfield Renewable, 150 Main Street, Lewiston, ME, 04240; telephone (207) 755–5600; or email *kyle.murphy@brookfieldrenewable.com.*

i. *FERC Contact:* Mark Ivy, (202) 502–6156, *mark.ivy@ferc.gov.*

j. *Deadline for filing comments, motions to intervene, and protests:* November 19, 2020.

The Commission strongly encourages electronic filing. Please file comments, motions to intervene, and protests using the Commission's eFiling system at *http://www.ferc.gov/docs-filing/efiling.asp.* Commenters can submit brief comments up to 6,000 characters, without prior registration, using the eComment system at *http://www.ferc.gov/docs-filing/ecomment.asp.* You must include your name and contact information at the end of your comments. For assistance, please contact FERC Online Support at *FERCOnlineSupport@ferc.gov,* (866) 208–3676 (toll free), or (202) 502–8659 (TTY). In lieu of electronic filing, you may submit a paper copy. Submissions sent via the U.S. Postal Service must be addressed to: Kimberly D. Bose, Secretary, Federal Energy Regulatory Commission, 888 First Street NE, Room 1A, Washington, DC 20426. Submissions sent via any other carrier must be addressed to: Kimberly D. Bose, Secretary, Federal Energy Regulatory Commission, 12225 Wilkins Avenue, Rockville, Maryland 20852. The first page of any filing should include the docket number P–2615–048. Comments emailed to Commission staff are not considered part of the Commission record.

The Commission's Rules of Practice and Procedure require all intervenors filing documents with the Commission to serve a copy of that document on each person whose name appears on the official service list for the project. Further, if an intervenor files comments or documents with the Commission relating to the merits of an issue that may affect the responsibilities of a particular resource agency, they must also serve a copy of the document on that resource agency.

k. *Description of Request:* The licensees filed a revised Recreation Facilities Management Plan which incorporates changes required by the Commission's April 15, 2020 Order Issuing New License and proposes additional modifications, for Commission approval. The schedule for recreation monitoring would be modified so that it would occur every six years beginning in 2021. Additionally, the licensees propose to provide the recreation related information required by 18 CFR 8.1 via a local newspaper and on-site signage rather than posting it on a website.

l. In addition to publishing the full text of this document in the **Federal Register**, the Commission provides all interested persons an opportunity to view and/or print the contents of this document via the internet through the Commission's Home Page (*http://ferc.gov*) using the eLibrary link. Enter the docket number excluding the last three digits in the docket number field to access the document. At this time, the Commission has suspended access to the Commission's Public Reference Room, due to the proclamation declaring a National Emergency concerning the Novel Coronavirus Disease (COVID–19), issued by the President on March 13, 2020. For assistance, contact FERC at

FERCOnlineSupport@ferc.gov or call toll-free, (886) 208–3676 or TYY, (202) 502–8659. Agencies may obtain copies of the application directly from the applicant.

m. Individuals desiring to be included on the Commission's mailing list should so indicate by writing to the Secretary of the Commission.

n. *Comments, Protests, or Motions to Intervene:* Anyone may submit comments, a protest, or a motion to intervene in accordance with the requirements of Rules of Practice and Procedure, 18 CFR 385.210, .211, .214, respectively. In determining the appropriate action to take, the Commission will consider all protests or other comments filed, but only those who file a motion to intervene in accordance with the Commission's Rules may become a party to the proceeding. Any comments, protests, or motions to intervene must be received on or before the specified comment date for the particular application.

o. *Filing and Service of Documents:* Any filing must (1) bear in all capital letters the title COMMENTS, PROTEST, or MOTION TO INTERVENE as applicable; (2) set forth in the heading the name of the applicant and the project number of the application to which the filing responds; (3) furnish the name, address, and telephone number of the person commenting, protesting or intervening; and (4) otherwise comply with the requirements of 18 CFR 385.2001 through 385.2005. All comments, motions to intervene, or protests must set forth their evidentiary basis. Any filing made by an intervenor must be accompanied by proof of service on all persons listed in the service list prepared by the Commission in this proceeding, in accordance with 18 CFR 385.2010.

Dated: October 20, 2020.

Kimberly D. Bose,

Secretary.

[FR Doc. 2020–23652 Filed 10–23–20; 8:45 am]

BILLING CODE 6717–01–P

DEPARTMENT OF ENERGY

Federal Energy Regulatory Commission

[Docket No. ER21–116–000]

Supplemental Notice That Initial Market-Based Rate Filing Includes Request for Blanket Section 204 Authorization; XO Energy CAL, LP

This is a supplemental notice in the above-referenced XO Energy CAL, LP's application for market-based rate authority, with an accompanying rate tariff, noting that such application includes a request for blanket authorization, under 18 CFR part 34, of future issuances of securities and assumptions of liability.

Any person desiring to intervene or to protest should file with the Federal Energy Regulatory Commission, 888 First Street NE, Washington, DC 20426, in accordance with Rules 211 and 214 of the Commission's Rules of Practice and Procedure (18 CFR 385.211 and 385.214). Anyone filing a motion to intervene or protest must serve a copy of that document on the Applicant.

Notice is hereby given that the deadline for filing protests with regard to the applicant's request for blanket authorization, under 18 CFR part 34, of future issuances of securities and assumptions of liability, is November 9, 2020.

The Commission encourages electronic submission of protests and interventions in lieu of paper, using the FERC Online links at *http://www.ferc.gov.* To facilitate electronic service, persons with internet access who will eFile a document and/or be listed as a contact for an intervenor must create and validate an eRegistration account using the eRegistration link. Select the eFiling link to log on and submit the intervention or protests.

Persons unable to file electronically may mail similar pleadings to the Federal Energy Regulatory Commission, 888 First Street NE, Washington, DC 20426. Hand delivered submissions in docketed proceedings should be delivered to Health and Human Services, 12225 Wilkins Avenue, Rockville, Maryland 20852.

In addition to publishing the full text of this document in the **Federal Register**, the Commission provides all interested persons an opportunity to view and/or print the contents of this document via the internet through the Commission's Home Page (*http://ferc.gov*) using the eLibrary link. Enter the docket number excluding the last three digits in the docket number field to access the document. At this time, the Commission has suspended access to the Commission's Public Reference Room, due to the proclamation declaring a National Emergency concerning the Novel Coronavirus Disease (COVID–19), issued by the President on March 13, 2020. For assistance, contact the Federal Energy Regulatory Commission at *FERCOnlineSupport@ferc.gov* or call toll-free, (886) 208–3676 or TYY, (202) 502–8659.

Dated: October 19, 2020.

Nathaniel J. Davis, Sr.,

Deputy Secretary.

[FR Doc. 2020–23641 Filed 10–23–20; 8:45 am]

BILLING CODE 6717–01–P

DEPARTMENT OF ENERGY

Federal Energy Regulatory Commission

Combined Notice of Filings #1

Take notice that the Commission received the following exempt wholesale generator filings:

Docket Numbers: EG21–10–000.
Applicants: American Electric Power Service Corporation.
Description: Self-Certification of EWG of American Electric Power Service Corporation, on behalf of Flat Ridge 3.
Filed Date: 10/16/20.
Accession Number: 20201016–5177.
Comments Due: 5 p.m. ET 11/6/20.

Take notice that the Commission received the following electric rate filings:

Docket Numbers: ER20–2009–002.
Applicants: Tri-State Generation and Transmission Association, Inc.
Description: Compliance filing: Compliance Filing—Part 1 to be effective 2/25/2020.
Filed Date: 10/19/20.
Accession Number: 20201019–5041.
Comments Due: 5 p.m. ET 11/9/20.

Docket Numbers: ER20–2009–003.
Applicants: Tri-State Generation and Transmission Association, Inc.
Description: Compliance filing: Compliance Filing—Part 2 to be effective 2/25/2020.
Filed Date: 10/19/20.
Accession Number: 20201019–5042.
Comments Due: 5 p.m. ET 11/9/20.

Docket Numbers: ER20–2787–001.
Applicants: Greenleaf Energy Unit 2 LLC.
Description: Tariff Amendment: Deficiency filing to be effective 10/30/2020.
Filed Date: 10/16/20.
Accession Number: 20201016–5194.
Comments Due: 5 p.m. ET 11/6/20.

Docket Numbers: ER20–2787–002.
Applicants: Greenleaf Energy Unit 2 LLC.
Description: Tariff Amendment: Amendement to 5 to be effective 10/30/2020.
Filed Date: 10/19/20.
Accession Number: 20201019–5074.
Comments Due: 5 p.m. ET 11/9/20.

Docket Numbers: ER20–3027–001.
Applicants: Duke Energy Florida, LLC.

Description: Tariff Amendment: Amendment to DEF-Seminole Amended and Restated NITSA to be effective 12/1/2020.
Filed Date: 10/16/20.
Accession Number: 20201016–5190.
Comments Due: 5 p.m. ET 11/6/20.

Docket Numbers: ER21–130–001.
Applicants: New York Independent System Operator, Inc.
Description: Tariff Amendment: Amendment of exigent circumstances filing to be effective 10/21/2020.
Filed Date: 10/19/20.
Accession Number: 20201019–5045.
Comments Due: 5 p.m. ET 11/9/20.

Docket Numbers: ER21–136–000.
Applicants: Flat Ridge 3 Wind Energy, LLC.
Description: Baseline eTariff Filing: MBR Tariff Filing to be effective 12/1/2020.
Filed Date: 10/16/20.
Accession Number: 20201016–5180.
Comments Due: 5 p.m. ET 11/6/20.

Docket Numbers: ER21–137–000.
Applicants: American Transmission Systems, Incorporated, PJM Interconnection, L.L.C.
Description: § 205(d) Rate Filing: ATSI submits ECSA, SA No. 5710 to be effective 12/16/2020.
Filed Date: 10/16/20.
Accession Number: 20201016–5186.
Comments Due: 5 p.m. ET 11/6/20.

Docket Numbers: ER21–138–000.
Applicants: Mid-Atlantic Interstate Transmission, LLC, PJM Interconnection, L.L.C.
Description: § 205(d) Rate Filing: MAIT submits ECSA, SA No. 5711 to be effective 12/16/2020..
Filed Date: 10/16/20.
Accession Number: 20201016–5191.
Comments Due: 5 p.m. ET 11/6/20.

Docket Numbers: ER21–139–000.
Applicants: Ameren Illinois Company, Midcontinent Independent System Operator, Inc.
Description: § 205(d) Rate Filing: 2020–10–19_SA 3028 Ameren IL-Prairie Power Project #29 Arcola to be effective 12/19/2020.
Filed Date: 10/19/20.
Accession Number: 20201019–5032.
Comments Due: 5 p.m. ET 11/9/20.

Docket Numbers: ER21–140–000.
Applicants: PJM Interconnection, L.L.C.
Description: § 205(d) Rate Filing: Original ISA, Service Agreement No. 5797; Queue No. AC1–034 to be effective 9/17/2020.
Filed Date: 10/19/20.
Accession Number: 20201019–5036.
Comments Due: 5 p.m. ET 11/9/20.

Docket Numbers: ER21–141–000.
Applicants: PJM Interconnection, L.L.C.
Description: § 205(d) Rate Filing: Origianl ISA No. 5800; Queue No. AC1–143 to be effective 9/17/2020.
Filed Date: 10/19/20.
Accession Number: 20201019–5050.
Comments Due: 5 p.m. ET 11/9/20.

Docket Numbers: ER21–142–000.
Applicants: System Energy Resources, Inc.
Description: § 205(d) Rate Filing: SERI UPSA Protocols to be effective 1/1/2021.
Filed Date: 10/19/20.
Accession Number: 20201019–5070.
Comments Due: 5 p.m. ET 11/9/20.

Docket Numbers: ER21–143–000.
Applicants: Public Service Company of Colorado.
Description: § 205(d) Rate Filing: Amended and Restated Transmission Services Agreement to be effective 1/1/2021.
Filed Date: 10/19/20.
Accession Number: 20201019–5077.
Comments Due: 5 p.m. ET 11/9/20.

Docket Numbers: ER21–144–000.
Applicants: Duke Energy Florida, LLC.
Description: Tariff Cancellation: Notice of Terminiation—DEF–DEF- RS–296 to be effective 12/19/2020.
Filed Date: 10/19/20.
Accession Number: 20201019–5080.
Comments Due: 5 p.m. ET 11/9/20.

Take notice that the Commission received the following qualifying facility filings:

Docket Numbers: QF21–47–000.
Applicants: ArcelorMittal Cleveland LLC.
Description: Form 556 of ArcelorMittal Cleveland LLC [Cleveland].
Filed Date: 10/15/20.
Accession Number: 20201015–5222.
Comments Due: Non-Applicable.

Docket Numbers: QF21–48–000.
Applicants: ArcelorMittal Cleveland LLC.
Description: Form 556 of ArcelorMittal Cleveland LLC [Warren].
Filed Date: 10/15/20.
Accession Number: 20201015–5224.
Comments Due: Non-Applicable.

Docket Numbers: QF21–49–000.
Applicants: ArcelorMittal USA LLC.
Description: Form 556 of ArcelorMittal USA LLC [Indiana Harbor East No. 16].
Filed Date: 10/15/20.
Accession Number: 20201015–5226.
Comments Due: Non-Applicable.

Docket Numbers: QF21–50–000.
Applicants: ArcelorMittal USA LLC.
Description: Form 556 of ArcelorMittal USA LLC [Indiana Harbor West].
Filed Date: 10/15/20.
Accession Number: 20201015–5228.
Comments Due: Non-Applicable.

The filings are accessible in the Commission's eLibrary system (*https://elibrary.ferc.gov/idmws/search/fercgensearch.asp*) by querying the docket number.

Any person desiring to intervene or protest in any of the above proceedings must file in accordance with Rules 211 and 214 of the Commission's Regulations (18 CFR 385.211 and 385.214) on or before 5:00 p.m. Eastern time on the specified comment date. Protests may be considered, but intervention is necessary to become a party to the proceeding.

eFiling is encouraged. More detailed information relating to filing requirements, interventions, protests, service, and qualifying facilities filings can be found at: *http://www.ferc.gov/docs-filing/efiling/filing-req.pdf.* For other information, call (866) 208–3676 (toll free). For TTY, call (202) 502–8659.

Dated: October 19, 2020.

Nathaniel J. Davis, Sr.,

Deputy Secretary.

[FR Doc. 2020–23638 Filed 10–23–20; 8:45 am]

BILLING CODE 6717–01–P

DEPARTMENT OF ENERGY

Federal Energy Regulatory Commission

[Project No. 2056–055]

Notice of Application Accepted for Filing and Soliciting Comments, Motions To Intervene, and Protests; Northern States Power Company

Take notice that the following hydroelectric application has been filed with the Commission and is available for public inspection:

a. *Application Type:* Public Perception of Aesthetic Flows Survey.
b. *Project No:* 2056–055.
c. *Date Filed:* September 30, 2020.
d. *Applicant:* Northern States Power Company.
e. *Name of Project:* St. Anthony Falls Hydroelectric Project.
f. *Location:* The project is located on Hennepin Island along the east bank of the Mississippi River at St. Anthony Falls in the City of Minneapolis, Minnesota.
g. *Filed Pursuant to:* Federal Power Act, 16 U.S.C. 791a–825r.
h. *Applicant Contact:* Matthew Miller, Xcelenergy, 1414 W. Hamilton Ave, PO Box 8, Eau Claire, WI 54702; telephone (715) 225–8841; or email *matthew.j.miller@xcelenergy.com.*

i. *FERC Contact:* Mark Ivy, (202) 502–6156, *mark.ivy@ferc.gov.*

j. *Deadline for filing comments, motions to intervene, and protests:* November 19, 2020.

The Commission strongly encourages electronic filing. Please file comments, motions to intervene, and protests using the Commission's eFiling system at *http://www.ferc.gov/docs-filing/efiling.asp.* Commenters can submit brief comments up to 6,000 characters, without prior registration, using the eComment system at *http://www.ferc.gov/docs-filing/ecomment.asp.* You must include your name and contact information at the end of your comments. For assistance, please contact FERC Online Support at *FERCOnlineSupport@ferc.gov,* (866) 208–3676 (toll free), or (202) 502–8659 (TTY). In lieu of electronic filing, you may submit a paper copy. Submissions sent via the U.S. Postal Service must be addressed to: Kimberly D. Bose, Secretary, Federal Energy Regulatory Commission, 888 First Street NE, Room 1A, Washington, DC 20426. Submissions sent via any other carrier must be addressed to: Kimberly D. Bose, Secretary, Federal Energy Regulatory Commission, 12225 Wilkins Avenue, Rockville, Maryland 20852. The first page of any filing should include the docket number P–2615–048. Comments emailed to Commission staff are not considered part of the Commission record.

The Commission's Rules of Practice and Procedure require all intervenors filing documents with the Commission to serve a copy of that document on each person whose name appears on the official service list for the project. Further, if an intervenor files comments or documents with the Commission relating to the merits of an issue that may affect the responsibilities of a particular resource agency, they must also serve a copy of the document on that resource agency.

k. *Description of Request:* The licensee filed a revised survey instrument for the Public Perception of Aesthetic Flows Survey (Public Perception Survey) as required by the Commission's July 2, 2019 Order Requiring Public Perception Survey and Modifying Article 402. The Public Perception Survey will be used to assess the adequacy of aesthetic flows over the falls from the perspective of visitors to the St. Anthony Falls area.

l. In addition to publishing the full text of this document in the **Federal Register**, the Commission provides all interested persons an opportunity to view and/or print the contents of this document via the internet through the Commission's Home Page (*http://ferc.gov*) using the eLibrary link. Enter the docket number excluding the last three digits in the docket number field to access the document. At this time, the Commission has suspended access to the Commission's Public Reference Room, due to the proclamation declaring a National Emergency concerning the Novel Coronavirus Disease (COVID–19), issued by the President on March 13, 2020. For assistance, contact FERC at *FERCOnlineSupport@ferc.gov* or call toll-free, (886) 208–3676 or TYY, (202) 502–8659. Agencies may obtain copies of the application directly from the applicant.

m. Individuals desiring to be included on the Commission's mailing list should so indicate by writing to the Secretary of the Commission.

n. *Comments, Protests, or Motions to Intervene:* Anyone may submit comments, a protest, or a motion to intervene in accordance with the requirements of Rules of Practice and Procedure, 18 CFR 385.210, .211, .214, respectively. In determining the appropriate action to take, the Commission will consider all protests or other comments filed, but only those who file a motion to intervene in accordance with the Commission's Rules may become a party to the proceeding. Any comments, protests, or motions to intervene must be received on or before the specified comment date for the particular application.

o. *Filing and Service of Documents:* Any filing must (1) bear in all capital letters the title COMMENTS, PROTEST, or MOTION TO INTERVENE as applicable; (2) set forth in the heading the name of the applicant and the project number of the application to which the filing responds; (3) furnish the name, address, and telephone number of the person commenting, protesting or intervening; and (4) otherwise comply with the requirements of 18 CFR 385.2001 through 385.2005. All comments, motions to intervene, or protests must set forth their evidentiary basis. Any filing made by an intervenor must be accompanied by proof of service on all persons listed in the service list prepared by the Commission in this proceeding, in accordance with 18 CFR 385.2010.

Dated: October 20, 2020.

Kimberly D. Bose,

Secretary.

[FR Doc. 2020–23654 Filed 10–23–20; 8:45 am]

BILLING CODE 6717–01–P

DEPARTMENT OF ENERGY

Federal Energy Regulatory Commission

[Docket No. ER21–133–000]

Supplemental Notice That Initial Market-Based Rate Filing Includes Request for Blanket Section 204 Authorization; HDSI, LLC

This is a supplemental notice in the above-referenced HDSI, LLC's application for market-based rate authority, with an accompanying rate tariff, noting that such application includes a request for blanket authorization, under 18 CFR part 34, of future issuances of securities and assumptions of liability.

Any person desiring to intervene or to protest should file with the Federal Energy Regulatory Commission, 888 First Street NE, Washington, DC 20426, in accordance with Rules 211 and 214 of the Commission's Rules of Practice and Procedure (18 CFR 385.211 and 385.214). Anyone filing a motion to intervene or protest must serve a copy of that document on the Applicant.

Notice is hereby given that the deadline for filing protests with regard to the applicant's request for blanket authorization, under 18 CFR part 34, of future issuances of securities and assumptions of liability, is November 9, 2020.

The Commission encourages electronic submission of protests and interventions in lieu of paper, using the FERC Online links at *http://www.ferc.gov.* To facilitate electronic service, persons with internet access who will eFile a document and/or be listed as a contact for an intervenor must create and validate an eRegistration account using the eRegistration link. Select the eFiling link to log on and submit the intervention or protests.

Persons unable to file electronically may mail similar pleadings to the Federal Energy Regulatory Commission, 888 First Street NE, Washington, DC 20426. Hand delivered submissions in docketed proceedings should be delivered to Health and Human Services, 12225 Wilkins Avenue, Rockville, Maryland 20852.

In addition to publishing the full text of this document in the **Federal Register**, the Commission provides all interested persons an opportunity to view and/or print the contents of this document via the internet through the Commission's Home Page (*http://ferc.gov*) using the eLibrary link. Enter the docket number excluding the last three digits in the docket number field

to access the document. At this time, the Commission has suspended access to the Commission's Public Reference Room, due to the proclamation declaring a National Emergency concerning the Novel Coronavirus Disease (COVID–19), issued by the President on March 13, 2020. For assistance, contact the Federal Energy Regulatory Commission at *FERCOnlineSupport@ferc.gov* or call toll-free, (886) 208–3676 or TYY, (202) 502–8659.

Dated: October 19, 2020.

Nathaniel J. Davis, Sr.,

Deputy Secretary.

[FR Doc. 2020–23643 Filed 10–23–20; 8:45 am]

BILLING CODE 6717–01–P

DEPARTMENT OF ENERGY

Federal Energy Regulatory Commission

[Docket No. ER21–136–000]

Supplemental Notice That Initial Market-Based Rate Filing Includes Request for Blanket Section 204 Authorization; Flat Ridge 3 Wind Energy, LLC

This is a supplemental notice in the above-referenced Flat Ridge 3 Wind Energy, LLC's application for market-based rate authority, with an accompanying rate tariff, noting that such application includes a request for blanket authorization, under 18 CFR part 34, of future issuances of securities and assumptions of liability.

Any person desiring to intervene or to protest should file with the Federal Energy Regulatory Commission, 888 First Street NE, Washington, DC 20426, in accordance with Rules 211 and 214 of the Commission's Rules of Practice and Procedure (18 CFR 385.211 and 385.214). Anyone filing a motion to intervene or protest must serve a copy of that document on the Applicant.

Notice is hereby given that the deadline for filing protests with regard to the applicant's request for blanket authorization, under 18 CFR part 34, of future issuances of securities and assumptions of liability, is November 9, 2020.

The Commission encourages electronic submission of protests and interventions in lieu of paper, using the FERC Online links at *http://www.ferc.gov.* To facilitate electronic service, persons with internet access who will eFile a document and/or be listed as a contact for an intervenor must create and validate an eRegistration account using the eRegistration link. Select the eFiling link to log on and submit the intervention or protests.

Persons unable to file electronically may mail similar pleadings to the Federal Energy Regulatory Commission, 888 First Street NE, Washington, DC 20426. Hand delivered submissions in docketed proceedings should be delivered to Health and Human Services, 12225 Wilkins Avenue, Rockville, Maryland 20852.

In addition to publishing the full text of this document in the **Federal Register**, the Commission provides all interested persons an opportunity to view and/or print the contents of this document via the internet through the Commission's Home Page (*http://ferc.gov*) using the eLibrary link. Enter the docket number excluding the last three digits in the docket number field to access the document. At this time, the Commission has suspended access to the Commission's Public Reference Room, due to the proclamation declaring a National Emergency concerning the Novel Coronavirus Disease (COVID–19), issued by the President on March 13, 2020. For assistance, contact the Federal Energy Regulatory Commission at *FERCOnlineSupport@ferc.gov* or call toll-free, (886) 208–3676 or TYY, (202) 502–8659.

Dated: October 19, 2020.

Nathaniel J. Davis, Sr.,

Deputy Secretary.

[FR Doc. 2020–23644 Filed 10–23–20; 8:45 am]

BILLING CODE 6717–01–P

DEPARTMENT OF ENERGY

Federal Energy Regulatory Commission

[Docket No. IC21–4–000]

Commission Information Collection Activities (FERC–549b); Comment Request; Extension

AGENCY: Federal Energy Regulatory Commission.

ACTION: Notice of information collection and request for comments.

SUMMARY: In compliance with the requirements of the Paperwork Reduction Act), the Federal Energy Regulatory Commission (Commission or FERC) is soliciting public comment on the currently approved information collection, FERC–549B (Gas Pipeline Rates: Annual Capacity Reports and Index of Customers).

DATES: Comments on the collection of information are due December 28, 2020.

ADDRESSES: You may submit comments (identified by Docket IC21–4–000) by any of the following methods:

- *eFiling at Commission's Website: http://www.ferc.gov/docs-filing/efiling.asp.*
- *U.S. Postal Service Mail:* Persons unable to file electronically may mail similar pleadings to the Federal Energy Regulatory Commission, 888 First Street NE, Washington, DC 20426.
- Effective 7/1/2020, delivery of filings other than by eFiling or the U.S. Postal Service should be delivered to Health and Human Services, 12225 Wilkins Avenue, Rockville, Maryland 20852.

Instructions: All comments must be formatted and filed in accordance with submission guidelines at: *http://www.ferc.gov.* For user assistance, contact FERC Online Support by email at *ferconlinesupport@ferc.gov,* or by phone at: (866) 208–3676 (toll-free).

Docket: Users interested in receiving automatic notification of activity in this docket or in viewing/downloading comments and issuances in this docket may do so at *http://www.ferc.gov/docs-filing/docs-filing.asp.*

FOR FURTHER INFORMATION CONTACT: Ellen Brown may be reached by email at *DataClearance@FERC.gov* and telephone at (202) 502–8663.

SUPPLEMENTARY INFORMATION:

Title: FERC–549B (Gas Pipeline Rates: Annual Capacity Reports and Index of Customers).

OMB Control No.: 1902–0169.

Type of Request: Three-year extension of the FERC–549B information collection requirements with changes to the current reporting requirements.

Abstract: As described below, FERC–549B is comprised of information collection activities at 18 CFR 284.13(b), 284.13(c), 284.13(d)(1), and 284.13(d)(2). The purpose of these information collection activities is to provide reliable information about capacity availability and price that shippers need to make informed decisions in a competitive market, and to enable shippers and the Commission to monitor marketplace behavior to detect, and remedy anti-competitive behavior.

Reports on Firm and Interruptible Services and on Capacity and Flow Information Under 18 CFR 284.13(b) and 284.13(d)(1)

This information collection activity enables shippers to release transportation and storage capacity to other shippers wanting to obtain capacity. The information results in reliable capacity information

availability and price data that shippers need to make informed decisions in a competitive market, and enables shippers and the Commission to monitor the market for potential abuses.

Index of Customers Under 18 CFR 284.13(c)

The regulation at 18 CFR 284.13(c) requires interstate pipelines to file an index of all its firm transportation and storage customers under contract. This index is due on the first business day of each calendar quarter. In addition, the index must be posted on the pipeline's internet website in a downloadable format complying with specifications established by the Commission. The information posted on the pipeline's internet website must be made available until the next quarterly index is posted. The requirements for the electronic index can be obtained from the Federal Energy Regulatory Commission, Division of Information Services, Public Reference and Files Maintenance Branch, Washington, DC 20426.

Peak-Day Annual Capacity Report Under 284.13(d)(2)

The regulation at 18 CFR 284.13(d)(2) requires an annual peak-day capacity report of all interstate pipelines, including natural gas storage-only companies. This report is generally a short report showing the peak day design capacity or the actual peak day capacity achieved, with a short explanation, if needed. The regulation provides that an interstate pipeline must make an annual filing by March 1 of each year showing the estimated peak day capacity of the pipeline's system, and the estimated storage capacity and maximum daily delivery capability of storage facilities under reasonably representative operating assumptions and the respective assignments of that capacity to the various firm services provided by the pipeline.

Types of Respondents: Respondents for this data collection are interstate pipelines and storage facilities subject to FERC regulation under the Natural Gas Act.

Estimate of Annual Burden: The Commission estimates the annual public reporting burden [1] for the information collection as shown in the following table:

FERC–549B (GAS PIPELINE RATES: CAPACITY REPORTS AND INDEX OF CUSTOMERS)

	Average annual number of respondents (1)	Average annual number of responses per respondent (2)	Average annual total number of responses (1) * (2) = (3)	Average burden & cost per response [2] (4)	Total annual burden hours & total annual cost (3) * (4) = (5)	Cost per respondent ($) (5) ÷ (1)
Capacity Reports under 284.13(b) & 284.13(d)(1).	168	6	1,008	145 hrs.; $146,160	146,160 hrs.; $12,131,280.	$72,210
Index of Customers under 18 CFR 284.13(c)	168	4	672	3 hrs.; $249	2,016 hrs.; $167,328	996
Peak Day Annual Capacity Report under 18 CFR 284.13(d)(2).	168	1	168	10 hrs.; $830	1,680 hrs.; $139,440	830
Totals			1,848		149,856 hrs.; $12,438,048.	74,036

Comments: Comments are invited on: (1) Whether the collection of information is necessary for the proper performance of the functions of the Commission, including whether the information will have practical utility; (2) the accuracy of the agency's estimate of the burden and cost of the collection of information, including the validity of the methodology and assumptions used; (3) ways to enhance the quality, utility and clarity of the information collection; and (4) ways to minimize the burden of the collection of information on those who are to respond, including the use of automated collection techniques or other forms of information technology.

Dated: October 20, 2020.

Kimberly D. Bose,

Secretary.

[FR Doc. 2020–23655 Filed 10–23–20; 8:45 am]

BILLING CODE 6717–01–P

[1] The Commission defines burden as the total time, effort, or financial resources expended by persons to generate, maintain, retain, or disclose or provide information to or for a Federal agency. For further explanation of what is included in the information collection burden, reference 5 CFR 1320.3.

[2] The current average cost for one FERC full-time equivalent ($83.00 per hour for wages plus benefits) is used as a proxy for industry's hourly cost.

DEPARTMENT OF ENERGY

Federal Energy Regulatory Commission

[Docket No. PF20–5–000]

Notice of Scoping Period Requesting Comments on Environmental Issues for the Planned LA Storage, LLC Hackberry Storage Project

The staff of the Federal Energy Regulatory Commission (FERC or Commission) will prepare an environmental document that will discuss the environmental impacts of the Hackberry Storage Project involving construction and operation of facilities by LA Storage, LLC (LA Storage) in Cameron and Calcasieu Parishes, Louisiana. The Commission will use this environmental document in its decision-making process to determine whether the project is in the public convenience and necessity.

This notice announces the opening of the scoping process the Commission will use to gather input from the public and interested agencies regarding the project. As part of the National Environmental Policy Act (NEPA) review process, the Commission takes into account concerns the public may have about proposals and the environmental impacts that could result from its action whenever it considers the issuance of a Certificate of Public Convenience and Necessity. This gathering of public input is referred to as ''scoping.'' The main goal of the scoping process is to focus the analysis in the environmental document on the important environmental issues. Additional information about the Commission's NEPA process is described below in the *NEPA Process and Environmental Document* section of this notice.

By this notice, the Commission requests public comments on the scope of issues to address in the environmental document. To ensure that your comments are timely and properly recorded, please submit your

comments so that the Commission receives them in Washington, DC on or before 5:00 p.m. Eastern Time on November 19, 2020. Comments may be submitted in written form. Further details on how to submit comments are provided in the *Public Participation* section of this notice.

Your comments should focus on the potential environmental effects, reasonable alternatives, and measures to avoid or lessen environmental impacts. Your input will help the Commission staff determine what issues they need to evaluate in the environmental document. Commission staff will consider all written comments during the preparation of the environmental document.

If you submitted comments on this project to the Commission before the opening of this docket on July 1, 2020, you will need to file those comments in Docket No. PF20–5–000 to ensure they are considered.

This notice is being sent to the Commission's current environmental mailing list for this project. State and local government representatives should notify their constituents of this planned project and encourage them to comment on their areas of concern.

If you are a landowner receiving this notice, a pipeline company representative may contact you about the acquisition of an easement to construct, operate, and maintain the planned facilities. The company would seek to negotiate a mutually acceptable easement agreement. You are not required to enter into an agreement. However, if the Commission approves the project, the Natural Gas Act conveys the right of eminent domain to the company. Therefore, if you and the company do not reach an easement agreement, the pipeline company could initiate condemnation proceedings in court. In such instances, compensation would be determined by a judge in accordance with state law. The Commission does not subsequently grant, exercise, or oversee the exercise of that eminent domain authority. The courts have exclusive authority to handle eminent domain cases; the Commission has no jurisdiction over these matters.

A fact sheet prepared by the FERC entitled An Interstate Natural Gas Facility On My Land? What Do I Need To Know? addresses typically asked questions, including the use of eminent domain and how to participate in the Commission's proceedings. This fact sheet along with other landowner topics of interest are available for viewing on the FERC website (*www.ferc.gov*) under the links to Natural Gas Questions or Landowner Topics.

Public Participation

There are three methods you can use to submit your comments to the Commission. Please carefully follow these instructions so that your comments are properly recorded. The Commission encourages electronic filing of comments and has staff available to assist you at (866) 208–3676 or *FercOnlineSupport@ferc.gov.*

(1) You can file your comments electronically using the *eComment* feature, which is located on the Commission's website (*www.ferc.gov*) under the link to FERC Online. Using eComment is an easy method for submitting brief, text-only comments on a project;

(2) You can file your comments electronically by using the eFiling feature, which is located on the Commission's website (*www.ferc.gov*) under the link to FERC Online. With eFiling, you can provide comments in a variety of formats by attaching them as a file with your submission. New eFiling users must first create an account by clicking on eRegister. You will be asked to select the type of filing you are making; a comment on a particular project is considered a Comment on a Filing; or

(3) You can file a paper copy of your comments by mailing them to the Commission. Be sure to reference the project docket number (PF20–5–000) on your letter. Submissions sent via the U.S. Postal Service must be addressed to: Kimberly D. Bose, Secretary, Federal Energy Regulatory Commission, 888 First Street NE, Room 1A, Washington, DC 20426. Submissions sent via any other carrier must be addressed to: Kimberly D. Bose, Secretary, Federal Energy Regulatory Commission, 12225 Wilkins Avenue, Rockville, Maryland 20852.

Additionally, the Commission offers a free service called eSubscription, which makes it easy to stay informed of all issuances and submittals regarding the dockets/projects to which you subscribe. These instant email notifications are the fastest way to receive notification and provide a link to the document files which can reduce the amount of time you spend researching proceedings. Go to *https://www.ferc.gov/ferc-online/overview* to register for eSubscription.

Summary of the Planned Project

The purpose of the Hackberry Storage Project is to construct and operate a high-deliverability salt dome natural gas storage facility in Cameron Parish, Louisiana, capable of providing 20.03 billion cubic feet (Bcf) of working gas storage capacity, 1.5 Bcf per day of gas deliverability and injectability, and interconnecting with the Cameron Interstate Pipeline (CIP) facilities operated by Cameron Interstate Pipeline, LLC and the Port Arthur Pipeline Louisiana Connector (PAPLC) facilities to be operated by Port Arthur Pipeline, LLC in Cameron and Calcasieu Parishes, Louisiana.

The project would involve the conversion of three existing salt dome caverns to natural gas storage service and the development of one new salt dome cavern for additional natural gas storage service, all within a permanent natural gas storage facility on a 160-acre tract of land owned by LA Storage. In addition to the storage caverns, LA Storage would construct and operate on-site compression facilities (Pelican Compressor Station) and up to six solution mining water supply wells at the storage facility on LA Storage's property.

The project would also construct:

- The Hackberry Pipeline, consisting of approximately 11.4 miles of 42-inch-diameter natural gas pipeline connecting the certificated PAPLC pipeline (CP18–7) to the natural gas storage caverns;
- the CIP Lateral, an approximately 5.2-mile-long, 42-inch-diameter natural gas pipeline extending from the existing CIP to the planned natural gas storage caverns;
- metering and regulating at the CIP and PAPLC interconnects; and
- an approximately 6.6-mile-long, 16-inch-diameter brine disposal pipeline that would transport brine from the caverns to four saltwater disposal wells located on two pads north of the facility.

The general location of the project facilities is shown in appendix 1.[1]

Land Requirements for Construction

Construction of the planned facilities would disturb about 441 acres of land. Following construction, LA Storage would maintain about 235 acres for permanent operation of the project's facilities; the remaining acreage would

[1] The appendices referenced in this notice will not appear in the **Federal Register**. Copies of the appendices were sent to all those receiving this notice in the mail and are available at *www.ferc.gov* using the link called eLibrary. For instructions on connecting to eLibrary, refer to the last page of this notice. At this time, the Commission has suspended access to the Commission's Public Reference Room due to the proclamation declaring a National Emergency concerning the Novel Coronavirus Disease (COVID–19), issued by the President on March 13, 2020. For assistance, contact FERC at *FERCOnlineSupport@ferc.gov* or call toll free, (886) 208–3676 or TTY (202) 502–8659.

be restored and revert to former uses. The Hackberry Pipeline, CIP Lateral, and brine disposal pipeline would be collocated for 5.2 miles.

NEPA Process and the Environmental Document

Any environmental document issued by Commission staff will discuss impacts that could occur as a result of the construction and operation of the planned project under the relevant general resource areas:

- Geology and soils;
- water resources and wetlands;
- vegetation and wildlife;
- threatened and endangered species;
- cultural resources;
- land use;
- air quality and noise; and
- reliability and safety.

Commission staff will also evaluate reasonable alternatives to the planned project or portions of the project and make recommendations on how to lessen or avoid impacts on the various resource areas. Your comments will help Commission staff identify and focus on the issues that might have an effect on the human environment and potentially eliminate others from further study and discussion in the environmental document.

Although no formal application has been filed, Commission staff have already initiated a NEPA review under the Commission's pre-filing process. The purpose of the pre-filing process is to encourage early involvement of interested stakeholders and to identify and resolve issues before the Commission receives an application. As part of the pre-filing review, Commission staff will contact federal and state agencies to discuss their involvement in the scoping process and the preparation of the environmental document.

If a formal application is filed, Commission staff will then determine whether to prepare an Environmental Assessment (EA) or an Environmental Impact Statement (EIS). The EA or the EIS will present Commission staff's independent analysis of the environmental issues. If Commission staff prepares an EA, a *Notice of Schedule for the Preparation of an EA* will be issued. The EA may be issued for an allotted public comment period. The Commission would consider timely comments on the EA before making its decision regarding the proposed project. If Commission staff prepares an EIS, a *Notice of Intent to Prepare an EIS/ Notice of Schedule* will be issued once an application is filed, which will open an additional public comment period. Staff will then prepare a draft EIS that will be issued for public comment. Commission staff will consider all timely comments received during the comment period on the draft EIS, and revise the document, as necessary, before issuing a final EIS. Any EA or draft and final EIS will be available in electronic format in the public record through eLibrary [2] and the Commission's natural gas environmental documents web page (*https://www.ferc.gov/industries-data/natural-gas/environment/environmental-documents*). If eSubscribed, you will receive instant email notification when the environmental document is issued.

With this notice, the Commission is asking agencies with jurisdiction by law and/or special expertise with respect to the environmental issues related to this project to formally cooperate in the preparation of the environmental document.[3] Agencies that would like to request cooperating agency status should follow the instructions for filing comments provided under the *Public Participation* section of this notice.

Consultation Under Section 106 of the National Historic Preservation Act

In accordance with the Advisory Council on Historic Preservation's implementing regulations for section 106 of the National Historic Preservation Act, the Commission is using this notice to initiate consultation with the applicable State Historic Preservation Office(s), and to solicit their views and those of other government agencies, interested Indian tribes, and the public on the project's potential effects on historic properties.[4] The environmental document for this project will document our findings on the impacts on historic properties and summarize the status of consultations under section 106.

Environmental Mailing List

The environmental mailing list includes federal, state, and local government representatives and agencies; elected officials; Native American Tribes; and other interested parties. This list also includes all affected landowners (as defined in the Commission's regulations) who are potential right-of-way grantors, whose property may be used temporarily for project purposes, or who own homes within certain distances of aboveground facilities, and anyone who submits comments on the project and includes a mailing address with their comments. Commission staff will update the environmental mailing list as the analysis proceeds to ensure that Commission notices related to this environmental review are sent to all individuals, organizations, and government entities interested in and/or potentially affected by the planned project.

If you need to make changes to your name/address, or if you would like to remove your name from the mailing list, please return the attached ''Mailing List Update Form'' (appendix 2).

Becoming an Intervenor

Once LA Storage files its application with the Commission, you may want to become an ''intervenor'' which is an official party to the Commission's proceeding. Only intervenors have the right to seek rehearing of the Commission's decision and be heard by the courts if they choose to appeal the Commission's final ruling. An intervenor formally participates in the proceeding by filing a request to intervene pursuant to Rule 214 of the Commission's Rules of Practice and Procedures (18 CFR 385.214). Motions to intervene are more fully described at *https://www.ferc.gov/resources/guides/how-to.asp.* Please note that the Commission will not accept requests for intervenor status at this time. You must wait until the Commission receives a formal application for the project, after which the Commission will issue a public notice that establishes an intervention deadline.

Additional Information

Additional information about the project is available from the Commission's Office of External Affairs, at (866) 208–FERC, or on the FERC website (*www.ferc.gov*) using the eLibrary link. Click on the eLibrary link, click on General Search and enter the docket number in the Docket Number field. Be sure you have selected an appropriate date range. For assistance, please contact FERC Online Support at *FercOnlineSupport@ferc.gov* or toll free at (866) 208–3676, or for TTY, contact (202) 502–8659. The eLibrary link also provides access to the texts of all formal documents issued by the Commission, such as orders, notices, and rulemakings.

[2] For instructions on connecting to eLibrary, refer to the last page of this notice.

[3] The Council on Environmental Quality regulations addressing cooperating agency responsibilities are at Title 40, Code of Federal Regulations, Part 1501.6.

[4] The Advisory Council on Historic Preservation regulations are at Title 36, Code of Federal Regulations, Part 800. Those regulations define historic properties as any prehistoric or historic district, site, building, structure, or object included in or eligible for inclusion in the National Register of Historic Places.

Public sessions or site visits will be posted on the Commission's calendar located at *https://www.ferc.gov/news-events/events* along with other related information.

Dated: October 20, 2020.

Kimberly D. Bose,

Secretary.

[FR Doc. 2020–23653 Filed 10–23–20; 8:45 am]

BILLING CODE 6717–01–P

DEPARTMENT OF ENERGY

Federal Energy Regulatory Commission

Combined Notice of Filings

Take notice that the Commission has received the following Natural Gas Pipeline Rate and Refund Report filings:

Docket Numbers: RP20–1266–001.
Applicants: Ozark Gas Transmission, L.L.C.
Description: Compliance filing Ozark Gas Amended Non-Conforming Agreement to be effective 11/1/2020.
Filed Date: 10/16/20.
Accession Number: 20201016–5089.
Comments Due: 5 p.m. ET 10/23/20.

Docket Numbers: RP21–61–000.
Applicants: Natural Gas Pipeline Company of America.
Description: § 4(d) Rate Filing: Negotiated Rate Agreements Filing-Union Electric to be effective 11/1/2020.
Filed Date: 10/16/20.
Accession Number: 20201016–5070.
Comments Due: 5 p.m. ET 10/28/20.

Docket Numbers: RP21–62–000.
Applicants: Natural Gas Pipeline Company of America.
Description: § 4(d) Rate Filing: Negotiated Rate Agreement Filing-Nicor Gas to be effective 11/1/2020.
Filed Date: 10/16/20.
Accession Number: 20201016–5072.
Comments Due: 5 p.m. ET 10/28/20.

Docket Numbers: RP21–63–000.
Applicants: Algonquin Gas Transmission, LLC.
Description: § 4(d) Rate Filing: Boston Gas 510366 Release to Direct Energy 803170 to be effective 10/17/2020.
Filed Date: 10/16/20.
Accession Number: 20201016–5083.
Comments Due: 5 p.m. ET 10/28/20.

Docket Numbers: RP21–64–000.
Applicants: Centra Pipelines Minnesota Inc.
Description: § 4(d) Rate Filing: Updated Shipper Index Dec 2020 to be effective 12/1/2020.
Filed Date: 10/16/20.
Accession Number: 20201016–5091.
Comments Due: 5 p.m. ET 10/28/20.

Docket Numbers: RP21–65–000.
Applicants: Viking Gas Transmission Company.
Description: § 4(d) Rate Filing: Non-Conforming Agreements AF0360 and AF0359 to be effective 11/20/2020.
Filed Date: 10/16/20.
Accession Number: 20201016–5184.
Comments Due: 5 p.m. ET 10/28/20.

The filings are accessible in the Commission's eLibrary system (*https://elibrary.ferc.gov/idmws/search/fercgensearch.asp*) by querying the docket number.

Any person desiring to intervene or protest in any of the above proceedings must file in accordance with Rules 211 and 214 of the Commission's Regulations (18 CFR 385.211 and 385.214) on or before 5:00 p.m. Eastern time on the specified date(s). Protests may be considered, but intervention is necessary to become a party to the proceeding.

eFiling is encouraged. More detailed information relating to filing requirements, interventions, protests, service, and qualifying facilities filings can be found at: *http://www.ferc.gov/docs-filing/efiling/filing-req.pdf.* For other information, call (866) 208–3676 (toll free). For TTY, call (202) 502–8659.

Dated: October 19, 2020.

Nathaniel J. Davis, Sr.,

Deputy Secretary.

[FR Doc. 2020–23639 Filed 10–23–20; 8:45 am]

BILLING CODE 6717–01–P

DEPARTMENT OF ENERGY

Federal Energy Regulatory Commission

[Project No. 2614–041]

Notice of Intent To File License Application, Filing of Pre-Application Document, Approving Use of the Traditional Licensing Process; City of Hamilton and American Municipal Power, Inc.

a. *Type of Filing:* Notice of Intent to File License Application and Request to Use the Traditional Licensing Process.
b. *Project No.:* 2614–041.
c. *Date Filed:* August 28, 2020.
d. *Submitted By:* The City of Hamilton, Ohio (City of Hamilton) and American Municipal Power, Inc. (AMP), co-Licensees.
e. *Name of Project:* Greenup Hydroelectric Project.
f. *Location:* The Greenup Hydroelectric Project is located at the U.S. Army Corps of Engineers' (Corps) Greenup Locks and Dam on the Ohio River near the Town of Franklin Furnace in Scioto County, Ohio. The project occupies 12.74 acres of federal land administered by the Corps.
g. *Filed Pursuant to:* 18 CFR 5.3 of the Commission's regulations.
h. *Potential Applicant Contacts:* Daniel F. Moats, Director of Utility Operations, City of Hamilton, 345 High Street, Suite 450, Hamilton, OH 45011, (513) 785–7245, *greenuplicensing@hamilton-oh.gov;* and Pamela M. Sullivan, Chief Operating Officer, American Municipal Power Inc., 1111 Schrock Road, Suite 100, Columbus, OH 43229, (614) 540–1111.
i. *FERC Contact:* Shana Wiseman at (202) 502–8736; or email at *shana.wiseman@ferc.gov.*
j. The City of Hamilton and AMP filed their request to use the Traditional Licensing Process on August 28, 2020, and provided public notice of their request on the same date. In a letter dated October 19, 2020, the Director of the Division of Hydropower Licensing approved the City of Hamilton and AMP's request to use the Traditional Licensing Process.
k. With this notice, we are initiating informal consultation with the U.S. Fish and Wildlife Service and/or NOAA Fisheries under section 7 of the Endangered Species Act and the joint agency regulations thereunder at 50 CFR, Part 402; and NOAA Fisheries under section 305(b) of the Magnuson-Stevens Fishery Conservation and Management Act and implementing regulations at 50 CFR 600.920. We are also initiating consultation with the Ohio State Historic Preservation Officer (SHPO) and the Kentucky SHPO, as required by section 106, National Historic Preservation Act, and the implementing regulations of the Advisory Council on Historic Preservation at 36 CFR 800.2.
l. With this notice, we are designating the City of Hamilton and AMP as the Commission's non-federal representative for carrying out informal consultation pursuant to section 7 of the Endangered Species Act; and consultation pursuant to section 106 of the National Historic Preservation Act.
m. The City of Hamilton and AMP filed a Pre-Application Document (PAD); including a proposed process plan and schedule with the Commission, pursuant to 18 CFR 5.6 of the Commission's regulations.
n. A copy of the PAD may be viewed and/or printed on the Commission's website (*http://www.ferc.gov*), using the eLibrary link. Enter the docket number, excluding the last three digits in the docket number field to access the document. The PAD is also available on the applicant's project website at *https://hamiltonoh.squarespace.com/*

greenup-licensing?rq=greenup. At this time, the Commission has suspended access to the Commission's Public Reference Room, due to the proclamation declaring a National Emergency concerning the Novel Coronavirus Disease (COVID–19), issued by the President on March 13, 2020. For assistance, contact FERC Online Support at *FERCOnlineSupport@ferc.gov,* (866) 208–3676 (toll free), or (202) 502–8659 (TTY).

o. The licensee states its unequivocal intent to submit an application for a new license for Project No. 2614. Pursuant to 18 CFR 16.8, 16.9, and 16.10, each application for a new license and any competing license applications must be filed with the Commission at least 24 months prior to the expiration of the existing license. All applications for license for this project must be filed by February 28, 2024.

p. Register online at *http://www.ferc.gov/docs-filing/esubscription.asp* to be notified via email of new filing and issuances related to this or other pending projects. For assistance, contact FERC Online Support.

Dated: October 19, 2020.

Nathaniel J. Davis, Sr.,

Deputy Secretary.

[FR Doc. 2020–23645 Filed 10–23–20; 8:45 am]

BILLING CODE 6717–01–P

ENVIRONMENTAL PROTECTION AGENCY

[FRL–10016–02–OA]

Farm, Ranch, and Rural Communities Advisory Committee (FRRCC); Notice of Virtual Public Meeting

AGENCY: Environmental Protection Agency (EPA).

ACTION: Notice.

SUMMARY: Pursuant to the Federal Advisory Committee Act (FACA), the Environmental Protection Agency (EPA) is announcing a virtual, open, public meeting of the Farm, Ranch, and Rural Communities Advisory Committee (FRRCC) on November 12–13, 2020, with remote participation only. There will be no in-person gathering for this meeting.

DATES: This virtual public meeting will be held on Thursday, November 12, 2020, from 11 a.m. to approximately 5 p.m., and Friday, November 13, 2020, from 11 a.m. to approximately 5 p.m., Eastern Daylight Time. Members of the public seeking to view the meeting (but not provide oral comments) may register any time prior to the meeting. Members of the public seeking to make oral comments during the virtual meeting must register and contact the Designated Federal Officer directly by 12 p.m. Eastern Daylight Time on November 7, 2020 to be placed on a list of registered commenters and receive special instructions for participation.

ADDRESSES: To register and receive information on how to attend this virtual meeting, please visit: *https://www.epa.gov/faca/farm-ranch-and-rural-communities-federal-advisory-committee-frrcc-meeting-calendar.* Attendees must register online prior to the meeting to receive instructions for participation.

FOR FURTHER INFORMATION CONTACT: Rebecca Perrin, Designated Federal Officer (DFO), at *FRRCC@epa.gov* or 202–564–7719. Please note that, due to Coronavirus (COVID–19), there are currently practical limitations on the ability of EPA personnel to collect and respond to mailed ''hard copy'' correspondence. General information regarding the FRRCC can be found on the EPA website at: *www.epa.gov/faca/frrcc.*

SUPPLEMENTARY INFORMATION:

I. General Information

The purpose of the FRRCC is to provide policy advice, information, and recommendations to the EPA Administrator on a range of environmental issues and policies that are of importance to agriculture and rural communities. The purpose of this meeting is to discuss topics of relevance to agriculture and rural communities, specifically the two charge topics (1) creating a holistic pesticide program for the future and (2) supporting inter-agency environmental benchmarks with interagency partners on the issues of water quality and quantity and food loss and waste. A copy of the FRRCC charges and meeting agenda will be posted at *www.epa.gov/faca/frrcc.* This will be the second public meeting of the membership of the FRRCC which was newly appointed in June of 2020. Potentially interested entities may include: Farmers, ranchers, and rural communities and their allied industries; as well as the academic/research community who research environmental issues impacting agriculture; state, local, and tribal government agencies; and nongovernmental organizations.

II. How do I participate in the virtual public meeting?

A. Virtual Meeting

This meeting will be conducted as a virtual conference. You may attend by registering online before the meeting to receive information on how to participate. You may also submit written or oral comments for the committee by contacting the DFO directly per the processes outlined below.

B. Registration

Attendees should register via the link on this website prior to the meeting in order to receive information on how to participate in the virtual meeting: *https://www.epa.gov/faca/farm-ranch-and-rural-communities-federal-advisory-committee-frrcc-meeting-calendar.*

C. Procedures for Providing Public Comments

Oral Statements: In general, oral comments at this virtual conference will be limited to the Public Comments portions of the Meeting Agenda. Members of the public may provide oral comments limited to three minutes per individual or group, and submit further information in written comments. Persons interested in providing oral statements should register as attendees at the link provided above, and also contact the DFO directly at *FRRCC@epa.gov* by 12:00 p.m. Eastern Daylight Time on November 7, 2020 to be placed on the list of registered speakers and receive special instructions for participation. Oral commenters will be provided an opportunity to speak in the order in which their request was received by the DFO.

Written Statements: Persons interested in providing written statements pertaining to this committee meeting may email them to the DFO at *FRRCC@epa.gov* prior to 11:59 p.m. Eastern Daylight Time on November 13, 2020.

D. Availability of Meeting Materials

The Meeting Agenda and other materials for the virtual conference will be posted on the FRRCC website at *www.epa.gov/faca/frrcc.*

E. Accessibility

Persons with disabilities who wish to request reasonable accommodations to participate in this event may contact the DFO at *FRRCC@epa.gov* or 202–564–7719 by 12:00 p.m. Eastern Daylight Time on November 5, 2020. All final meeting materials will be posted to the FRRCC website in an accessible format

following the meeting, as well as a written summary of this meeting.

Carrie Vicenta Meadows,

Agriculture Advisor to the Administrator.

[FR Doc. 2020–23714 Filed 10–23–20; 8:45 am]

BILLING CODE 6560–50–P

ENVIRONMENTAL PROTECTION AGENCY

[EPA–HQ–OAR–2020–0464; FRL 10016–13–OAR]

Access by EPA Contractors to Information Claimed as Confidential Business Information (CBI) Submitted Under Title II of the Clean Air Act and Related Regulations

AGENCY: Environmental Protection Agency (EPA).

ACTION: Notice.

SUMMARY: EPA's Office of Transportation and Air Quality (OTAQ) plans to authorize various contractors to access information which is submitted to us under the Clean Air Act and which may be claimed as, or may be determined to be, confidential business information (CBI). The information is related to the registration of fuels and fuel additives under 40 CFR part 79 and to various compositional and performance standards for reformulated gasoline, conventional gasoline, diesel fuel, detergents, and the renewable fuel standard (RFS) under 40 CFR part 80.

DATES: The EPA will accept comments on this Notice through November 2, 2020.

ADDRESSES: You may send comments, identified by Docket ID No EPA–HQ–OAR–2020–0464, by any of the following methods:

- *Federal eRulemaking Portal:* Submit your comments at *https://www.regulations.gov/* (our preferred method). Follow the online instructions for submitting comments.
- *Email:* Email your comments to *a-and-r-Docket@epa.gov.* Include Docket ID No. EPA–HQ–OAR–2020–0464 in the subject line of the message.
- *Mail:* U.S. Environmental Protection Agency, EPA Docket Center, Air & Radiation Docket, Mail Code 28221T, 1200 Pennsylvania Avenue NW, Washington, DC 20460.
- *Hand Delivery or Courier (by scheduled appointment only):* EPA Docket Center, WJC West Building, Room 3334, 1301 Constitution Avenue NW, Washington, DC 20004. The Docket Center's hours of operations are 8:30 a.m.–4:30 p.m., Monday–Friday (except Federal Holidays).

Instructions: All submissions received must include the Docket ID No. for this notice. Comments received may be posted without change to *https://www.regulations.gov/,* including any personal information provided. For detailed instructions on sending comments and additional information on this action, see the ''Public Participation'' heading of the **SUPPLEMENTARY INFORMATION** section of this document. Out of an abundance of caution for members of the public and our staff, the EPA Docket Center and Reading Room are closed to the public, with limited exceptions, to reduce the risk of transmitting COVID–19. Our Docket Center staff will continue to provide remote customer service via email, phone, and webform. We encourage the public to submit comments via *https://www.regulations.gov/* or email, as there may be a delay in processing mail and faxes. Hand deliveries and couriers may be received by scheduled appointment only. For further information on EPA Docket Center services and the current status, please visit us online at *https://www.epa.gov/dockets.*

FOR FURTHER INFORMATION CONTACT: Anne-Marie Pastorkovich, Environmental Protection Agency, 1200 Pennsylvania Ave. NW, MC 6405A, Washington, DC 20460; telephone number: 202–343–9623; email address: *pastorkovich.anne-marie@epa.gov.*

SUPPLEMENTARY INFORMATION:

I. Does this Notice apply to me?

This action is directed to the general public. However, this action may be of particular interest to parties who submit information to the EPA regarding fuel and fuel additive registration (40 CFR part 79) and related to various standards for reformulated and conventional gasoline, diesel fuel, detergents, and the renewable fuel standard (40 CFR part 80). Parties who may be interested in this action include fuel manufacturers (such as refiners and importers), manufacturers of fuel additives, producers of renewable fuels, exporters, parties who engage in Renewable Identification Number (RIN) transactions, and all those who submit 40 CFR part 79 and part 80 registrations or reports to the EPA via any method or system. Such systems include the EPA Central Data Exchange (CDX), DCFUEL, OTAQReg, and the EPA Moderated Transaction System (EMTS).

This **Federal Register** notice may be of relevance to parties that submit data under the above-listed programs or systems. Since other parties may also be interested, the Agency has not attempted to describe all the specific parties that may be affected by this action. If you have further questions regarding the applicability of this action to a party, please contact the person listed in **FOR FURTHER INFORMATION CONTACT**.

II. Public Participation

Submit your comments, identified by Docket ID No. EPA–HQ–OAR–2020–0464 at *https://www.regulations.gov* (our preferred method), or the other methods identified in the **ADDRESSES** section. Once submitted, comments cannot be edited or removed from the docket. The EPA may publish any comment received to its public docket. Do not submit to EPA's docket at *https://www.regulations.gov* any information you consider to be confidential business information (CBI) or other information whose disclosure is restricted by statute. Multimedia submissions (audio, video, etc.) must be accompanied by a written comment. The written comment is considered the official comment and should include discussion of all points you wish to make. The EPA will generally not consider comments or comment contents located outside of the primary submission (*i.e.,* on the web, cloud, or other file sharing system). For additional submission methods, the full EPA public comment policy, information about CBI or multimedia submissions, and general guidance on making effective comments, please visit *https://www.epa.gov/dockets/commenting-epa-dockets.*

As mentioned above, EPA is suspending its Docket Center and Reading Room for public visitors, with limited exceptions, to reduce the risk of transmitting COVID–19. Our Docket Center staff will continue to provide remote customer service via email, phone, and webform. We encourage the public to submit comments via *https://www.regulations.gov/* as there may be a delay in processing mail and faxes. Hand deliveries or couriers will be received by scheduled appointment only. For further information and updates on EPA Docket Center services, please visit us online at *https://www.epa.gov/dockets.*

The EPA continues to carefully and continuously monitor information from the Centers for Disease Control and Prevention (CDC), local area health departments, and our Federal partners so that we can respond rapidly as conditions change regarding COVID–19.

III. Description of Programs and Potential Disclosure of Information Claimed as Confidential Business Information (CBI) to Contractors

The EPA's Office of Transportation and Air Quality (OTAQ) has responsibility for protecting public health and the environment by regulating air pollution from motor vehicles, engines, and the fuels used to operate them, and by encouraging travel choices that minimize emissions. In order to implement various Clean Air Act programs, and to permit regulated entities flexibility in meeting regulatory requirements (*e.g.,* compliance on average), we collect compliance reports and other information from them. The information submitted may be claimed as CBI. Information submitted under such a claim is handled in accordance with EPA's regulations at 40 CFR part 2, subpart B and in accordance with Agency procedures, including comprehensive system security planning. When the EPA has determined that disclosure of information claimed as CBI to contractors is necessary, the corresponding contract must address the appropriate use and handling of the information by the contractor and the contractor must require its personnel who require access to information claimed as CBI to sign written non-disclosure agreements before they are granted access to data.

In accordance with 40 CFR 2.301(h), we have determined that the contractors, subcontractors, and grantees (collectively referred to as ''contractors'') listed below require access to CBI submitted to us under the Clean Air Act and in connection with various programs related to the regulation of fuels and fuel additives under both 40 CFR part 79 (subparts A through F) and 40 CFR part 80—(subparts A through O, and appendices). OTAQ collects this data in order to monitor compliance with Clean Air Act programs and, in many cases, to permit regulated parties flexibility in meeting regulatory requirements. For example, data that may contain CBI are collected to register fuels and fuel additives prior to introduction into commerce under 40 CFR part 79. Certain programs under 40 CFR part 80 are designed to permit regulated parties an opportunity to comply on average, or to engage in transactions using various types of credits. Programs utilizing credits include gasoline sulfur, gasoline benzene, and RFS. Data submitted under 40 CFR part 80 includes information related to reformulated and conventional gasoline, diesel fuel, detergents, and renewable fuels. Fuels program data is reviewed and assessed to determine the success of the programs or to plan for regulatory improvements. We are issuing this **Federal Register** notice to inform all affected submitters of information that we plan to grant access to material that may be claimed as CBI to the contractors identified below on a need-to-know basis.

Under EPA Contract Number EP–C–16–012, General Dynamics Information Technology (GDIT) located at 650 Peter Jefferson Parkway, Suite 300 Charlottesville, Virginia 22911 provides report processing, program support, technical support and analysis and information technology services that involve access to information claimed as CBI related to 40 CFR parts 79 and 80. The original contractor, CSRA, was purchased by GDIT. The following subcontractors of GDIT continue to provide work under this contract:

- CGI Federal, Inc., 12601 Fair Lakes Circle, Fairfax, VA 22033–4902;
- Powersolv, Inc., 1801 Robert Fulton Drive, Suite 550, Reston, VA 20191 and their subcontractor, Premier Itech, Inc., 8869 Grand Ave., Beulah, CO 81023.

GDIT has added a subcontractor, Potomac Economics, LTD, 9990 Fairfax Blvd., Suite 560, Fairfax, VA 22030 to provide program support, technical support, and data analysis services that involve access to information claimed as CBI related to 40 CFR parts 79 and 80. Access by this subcontractor will begin on November 5, 2020.

Access to data under the GDIT contract will continue until June 30, 2021. If the contract is extended, this access will continue for the remainder of the contract without further notice. If the contract expires prior to June 30, 2021, the access will cease at that time. If GDIT employs additional subcontractors to support EPA on a regular basis or on a limited or one-time basis under the above-listed contract, and those subcontractors require access to CBI, EPA will notify interested parties of the contemplated disclosure and provide them with an opportunity to comment by publishing a notice in the **Federal Register**.

Under Contract Number EP–C–16–020, ICF Incorporated, LLC, 9300 Lee Highway, Fairfax, Virginia 22031, provides technical support and data analysis services that involve access to information claimed as CBI related to 40 CFR parts 79 and 80. Access to data will begin and will continue until September 30, 2021. If the contract is extended, this access will continue for the remainder of the contract without further notice. If the contract expires prior to September 30, 2021, the access will cease at that time. If ICF employs subcontractors to support EPA on a regular basis or on a limited or one-time basis under the above-listed contract, and those subcontractors require access to CBI, EPA will notify interested parties of the contemplated disclosure and provide them with an opportunity to comment by publishing a notice in the **Federal Register**.

Under Contract Number 68HERD20A0004, Research Triangle Institute, RTI, P.O. Box 12194, Research Triangle Park, NC 27709–2194, and its subcontractors, Dr. Ruiqing Miao, Auburn University, Auburn, Alabama and Dr. Madhu Khanna, University of Illinois at Urbana-Champaign, Urbana, Illinois, provide technical support and data analysis services that involve access to information claimed as CBI related to 40 CFR parts 79 and 80. Access to data will begin November 5, 2020 and will continue until July 19, 2021. If the contract is extended, this access will continue for the remainder of the contract without further notice. If the contract expires prior to July 19, 2021, the access will cease at that time. If RTI employs additional subcontractors to support EPA on a regular basis or on a limited or one-time basis under the above-listed contract, and those subcontractors require access to CBI, EPA will notify interested parties of the contemplated disclosure and provide them with an opportunity to comment by publishing a notice in the **Federal Register**.

Parties who want further information about this **Federal Register** notice or about OTAQ's disclosure of information claimed as CBI to contactors may contact the person listed under **FOR FURTHER INFORMATION CONTACT**.

Dated: October 19, 2020.

Byron J. Bunker,

Director, Compliance Division, Office of Transportation & Air Quality, Office of Air and Radiation.

[FR Doc. 2020–23553 Filed 10–23–20; 8:45 am]

BILLING CODE 6560–50–P

FEDERAL MARITIME COMMISSION

Agency Information Collection Activities: Submission for OMB Review; Comment Request

AGENCY: Federal Maritime Commission.

ACTION: Notice and request for comment.

SUMMARY: The Federal Maritime Commission (Commission) is giving public notice that the agency has submitted to the Office of Management and Budget (OMB) for approval the

continuing information collection (reinstatement with change) described in this notice. The public is invited to comment on the proposed information collection pursuant to the Paperwork Reduction Act of 1995.

DATES: Written comments must be submitted at the addresses below on or before November 25, 2020.

ADDRESSES: Comments should be addressed to: Office of Information and Regulatory Affairs, Office of Management and Budget, Attention: Shannon Joyce, Desk Officer for Federal Maritime Commission, 725 17th Street NW, Washington, DC 20503, *OIRA_Submission@OMB.EOP.GOV,* Fax (202) 395–5167, and to: Karen V. Gregory, Managing Director, *OMD@fmc.gov.*

FOR FURTHER INFORMATION CONTACT: Copies of the submission(s) may be obtained by contacting Donna Lee at 202–523–5800 or email: *omd@fmc.gov.*

SUPPLEMENTARY INFORMATION:

Request for Comment

Pursuant to the Paperwork Reduction Act of 1995 (44 U.S.C. 3501 *et seq.*), the Commission invites the general public and other Federal agencies to comment on the proposed information collection. On April 16, 2020, the Commission published a notice and request for comment in the **Federal Register** (85 FR 21233) regarding the agency's request for extension from OMB for this information collection as required by the Paperwork Reduction Act of 1995. The Commission received no comments on the request for extension of OMB approval. The subject information collection expired on May 31, 2020. The Commission has submitted the described information collection to OMB for reinstatement.

In response to this notice, comments and suggestions should address one or more of the following points: (1) The necessity and utility of the proposed information collection for the proper performance of the agency's functions; (2) the accuracy of the estimated burden; (3) ways to enhance the quality, utility, and clarity of the information to be collected; and (4) the use of automated collection techniques or other forms of information technology to minimize the information collection burden.

Information Collection Open for Comment

Title: 46 CFR part 540—Application for Certificate of Financial Responsibility/Form FMC–131.

OMB Approval Number: 3072–0012 (Expired May 31, 2020).

Abstract: Sections 2 and 3 of Public Law 89–777 (46 U.S.C. 44101–44106) require owners, charterers, or operators of passenger vessels with 50 or more passenger berths or stateroom accommodations and embarking passengers at United States ports and territories to establish their financial responsibility to meet liability incurred for death or injury to passengers and other persons, and to indemnify passengers in the event of nonperformance of transportation. The Commission's regulations at 46 CFR part 540 implement Public Law 89–777 and specify financial responsibility coverage requirements for such owners, charterers, or operators.

Current Actions: There are changes to this information collection, and it is being submitted for reinstatement and approval of changes. Twelve fields have been eliminated due to being captured on the financial instrument and we have reduced several questions regarding financial responsibility into two questions. Our intent is to make the form more intuitive and easier to use and understand. Additionally, information collected in a data format, as opposed to receiving this information in a narrative format, will assist us in analyzing the submissions.

Type of Review: Reinstatement with change.

Needs and Uses: The information will be used by the Commission's staff to ensure that passenger vessel owners, charterers, and operators have evidenced financial responsibility to indemnify passengers and others in the event of nonperformance or casualty.

Frequency: This information is collected when applicants apply for a certificate or when existing certificates change any information in their application forms.

Affected Public Who Will Be Asked or Required to Respond: Respondents are owners, charterers, or operators of passenger vessels with 50 or more passenger berths that embark passengers from U.S. ports or territories.

Number of Annual Respondents: The Commission estimates the total number of respondents at 52 annually.

Estimated Time per Response: The time per response ranges from 0.5 to 8 hours for reporting and recordkeeping requirements contained in the regulations, and 8 hours for completing Application Form FMC–131.

Total Annual Burden: The Commission estimates the total burden at 1,233 hours per year.

Rachel Dickon,

Secretary.

[FR Doc. 2020–23666 Filed 10–23–20; 8:45 am]

BILLING CODE 6730–02–P

FEDERAL MEDIATION AND CONCILIATION SERVICE

Privacy Act of 1974; System of Records

AGENCY: Office of General Counsel (OGC), FMCS.

ACTION: Notice of a New System of Records.

SUMMARY: The Federal Mediation and Conciliation Service (FMCS) is establishing a new system of records for Freedom of Information Act records (FOIA) and Privacy Act records processing and a FOIA and Privacy Act information technology system new to FMCS that will enable requesters to submit, receive, and appeal their FOIA and Privacy Act requests and decisions via an online portal.

DATES: This notice will go in to effect without further notice on October 28, 2020, unless otherwise revised pursuant to comments received. New routine uses will go into effect on November 25, 2020. Comments must be received on or before November 25, 2020.

ADDRESSES: Office of General Counsel, 250 E Street SW, Washington, DC 20427: *foia@fmcs.gov.* Comments may be submitted via email at *foia@fmcs.gov* or via fax at (202) 606–5444. All submissions must refer to the System Name and Number FMCS–1–FOIA/PA.

FOR FURTHER INFORMATION CONTACT: Anna Davis, Deputy General Counsel, *adavis@fmcs.gov.*

SUPPLEMENTARY INFORMATION: This describes a new system for receiving, processing, and storing FOIA and Privacy Act requests, responses, and appeals.

SYSTEM NAME AND NUMBER:

FMCS–1–FOIA/PA.

SECURITY CLASSIFICATION:

Unclassified.

SYSTEM LOCATION:

Federal Mediation and Conciliation Service, 250 E Street SW, Washington, DC 20427; AINS 806 W. Diamond Avenue, Gaithersburg, MD 20878.

SYSTEM MANAGER(S):

Sarah Cudahy, General Counsel, FMCS 250 E Street SW, Washington, DC 20427.

AUTHORITY FOR MAINTENANCE OF THE SYSTEM:

Federal Mediation and Conciliation Service, 29 U.S.C. 172, *et seq.;* Freedom of Information Act, 5 U.S.C. 552; The Privacy Act of 1974, 5 U.S.C. 552a; 5 U.S.C. 301.

PURPOSE(S) OF THE SYSTEM:

This system is maintained for the purpose of processing access requests and administrative appeals under the FOIA (including system access records for requesters and staff), and access and amendment requests and appeals under the Privacy Act; corresponding with the Office of Information Policy (OIP) in the Department of Justice regarding federal agency compliance with the FOIA; and for the purpose of assisting FMCS in carrying out any other responsibilities under the FOIA and the Privacy Act.

CATEGORIES OF INDIVIDUALS COVERED BY THE SYSTEM:

Individuals filing requests for access to information under the FOIA and Privacy Act, maintaining an account through which to file FOIA requests and appeals, and FMCS staff assigned to help process, consider, and respond to such requests, including any appeals.

CATEGORIES OF RECORDS IN THE SYSTEM:

The system consists of records created or compiled in response to FOIA and Privacy Act requests and appeals, including: The original requests and administrative appeals; responses to such requests and administrative appeals; all related memoranda, correspondence, notes, other supporting documentation, and system access records for both requesters and FMCS staff (usernames and passwords). Information collected and maintained about individuals includes name, contact information, phone numbers, email addresses, and mailing addresses. Records may contain information about people named in them. This system also consists of records related to inquiries submitted to OIP regarding federal agency compliance with the FOIA, and all records related to the resolution of such inquiries.

RECORD SOURCE CATEGORIES:

Individuals about whom the record is maintained, and agency staff assigned to help process, review, or respond to the access request, including any appeal. Records pertaining to accessing the FOIA processing system will also be included in this records system.

ROUTINE USES OF RECORDS MAINTAINED IN THE SYSTEM, INCLUDING CATEGORIES OF USERS AND PURPOSES OF SUCH USES:

(a) To a federal, state, or local agency or entity for the purpose of consulting with that agency or entity to enable FMCS to make a determination as to access to or correction of information; for the purpose of verifying the identity of an individual or the accuracy of information submitted by an individual who has requested access to or amendment of information.

(b) To a federal agency or entity that furnished the record or information for the purpose of permitting that agency or entity to make a decision as to access or correction of the record or information, or to a federal agency or entity for purposes of providing guidance or advice regarding the handling of particular requests.

(c) To a submitter or subject of a record or information in order to obtain assistance to FMCS in making a determination as to access or amendment.

(d) To the National Archives and Records Administration for the purpose of adjudicating an appeal from an FMCS denial or a request.

(e) To appropriate agencies for the purpose of resolving an inquiry regarding FMCS compliance with the FOIA.

(f) To the National Archives and Records Administration, Office of Government Information Services (OGIS), to the extent necessary to fulfill responsibilities under 5 U.S.C. 552(h) to review administrative policies, procedures, and compliance with the FOIA, and to facilitate OGIS' offering of mediation services to resolve disputes between persons making FOIA requests and administrative agencies.

(g) To contractors, experts, consultants, and others performing or working on a contract service agreement, or other assignments for the federal government, when necessary to accomplish an agency function related to this system of records.

(h) To a Member of Congress or staff acting upon the Member's behalf when the Member or staff requests the information on behalf of, and at the request of, the individual who is the subject of the record.

(i) To any component of the Department of Justice for the purpose of representing FMCS, or its components, officers, employees, or members in pending or potential litigation to which the record is pertinent.

(j) In an appropriate proceeding before a court, grand jury, or administrative body, when FMC determines the records are relevant to the proceeding; or in an administrative or adjudicative body when the adjudicator determines the records to be relevant to the proceeding.

(k) To the news media and the public, unless it is determined that the release of specific information in the context of the particular case would constitute an unwarranted invasion of privacy.

(l) To such recipients and under such circumstances and procedures as are mandated by federal statute or regulation.

(m) To appropriate agencies, entities, and persons when (1) the Commission suspects or has confirmed that there has been a breach of the system of records, (2) the Commission has determined that as a result of the suspected or confirmed breach there is a risk of harm to individuals, the Commission (including its information systems, programs, and operations), the Federal Government, or national security; and (3) the disclosure made to such agencies, entities, and persons is reasonably necessary to assist in connection with the Commission's efforts to respond to the suspected or confirmed breach or to prevent, minimize, or remedy such harm.

(n) To another Federal agency or Federal entity, when the Commission determines that information from this system of records is reasonably necessary to assist the recipient agency or entity in (1) responding to a suspected or confirmed breach or (2) preventing, minimizing, or remedying the risk of harm to Individuals, the recipient agency or entity (including its information systems, programs, and operations), the Federal Government, or national security, resulting from a suspected or confirmed breach.

POLICIES AND PRACTICES FOR STORAGE OF RECORDS:

Records are maintained electronically using a commercial software application run on the agency's internal servers and shared drives run on the agency's internal servers. Hardcopy records are maintained in a locked file cabinet that require two badged access points.

POLICIES AND PRACTICES FOR RETRIEVAL OF RECORDS:

Indexed by name of requesting party and subject matter of request. Records can also be searched by name, address, phone number, fax number, and email of the requesting party, subject matter of the request, requestor organization, FOIA number, and staff members assigned to the request.

POLICIES AND PRACTICES FOR RETENTION AND DISPOSAL OF RECORDS:

Records are retained and disposed of in accordance with General Records

Schedule 4.2, issued by the National Archives and Records Administration.

ADMINSTRATIVE, TECHNICAL, AND PHYSICAL SAFEGUARDS:

Access to nonpublic system records is restricted to FMCS personnel or contractors whose responsibilities require access. Nonpublic paper records are temporary, maintained in lockable file cabinets or offices, and destroyed once the request and appeal process is complete. Access to electronic records is controlled by a ''user ID'' and password combination and other electronic access or network controls (*e.g.,* firewalls). FMCS buildings are guarded and monitored by security personnel, cameras, ID checks, and other physical security measures.

RECORD ACCESS PROCEDURES:

See 29 CFR 1410.3—Individual access requests. Requests can be submitted via the fmcs.gov website, via email to *privacy@fmcs.gov* or via mail at Chief Privacy Officer at FMCS 250 E Street SW, Washington, DC 20427.

CONTESTING RECORDS PROCEDURES:

See 29 CFR 1410.6 Appeals from denials of requests can be submitted via email to *privacy@fmcs.gov* or via mail at Chief Privacy Officer at FMCS.

NOTIFICATION PROCEDURES:

See 29 CFR 1410.3(a), *et seq.* Individuals who desire to know whether the agency maintains a system of records pertaining to them by submitting a written request to the Chief Privacy Officer at *privacy@fmcs.gov* or Chief Privacy Officer, FMCS, 250 E Street SW, Washington, DC 20427.

EXEMPTIONS PROMULGATED FOR THE SYSTEM:

None.

HISTORY:

None.

Dated: October 21, 2020.

Sarah Cudahy,

General Counsel.

[FR Doc. 2020–23651 Filed 10–23–20; 8:45 am]

BILLING CODE 6732–01–P

DEPARTMENT OF DEFENSE

GENERAL SERVICES ADMINISTRATION

NATIONAL AERONAUTICS AND SPACE ADMINISTRATION

[Docket No. 2020–0053; Sequence No. 13]

Information Collection; Payment by Electronic Fund Transfer-Other Than System for Award Management—OMB Control No. 9000–0144

AGENCY: Department of Defense (DOD), General Services Administration (GSA), and National Aeronautics and Space Administration (NASA).

ACTION: Notice and request for comments.

SUMMARY: In accordance with section 3506(c)(2)(A) of the Paperwork Reduction Act of 1995, and the Office of Management and Budget (OMB) regulations, DoD, GSA, and NASA invite the public to comment on a revision and renewal concerning payment by electronic fund transfer (other than System for Award Management). DoD, GSA, and NASA invite comments on: Whether the proposed collection of information is necessary for the proper performance of the functions of Federal Government acquisitions, including whether the information will have practical utility; the accuracy of the estimate of the burden of the proposed information collection; ways to enhance the quality, utility, and clarity of the information to be collected; and ways to minimize the burden of the information collection on respondents, including the use of automated collection techniques or other forms of information technology. OMB has approved this information collection for use through January 31, 2021. DoD, GSA, and NASA propose that OMB extend its approval for use for three additional years beyond the current expiration date.

DATES: DoD, GSA, and NASA will consider all comments received by December 28, 2020.

ADDRESSES: DoD, GSA, and NASA invite interested persons to submit comments on this collection through *http://www.regulations.gov* and follow the instructions on the site. This website provides the ability to type short comments directly into the comment field or attach a file for lengthier comments. If there are difficulties submitting comments, contact the GSA Regulatory Secretariat Division at 202–501–4755 or *GSARegSec@gsa.gov.*

Instructions: All items submitted must cite Information Collection 9000–0144, Payment by Electronic Fund Transfer-Other than System for Award Management. Comments received generally will be posted without change to *http://www.regulations.gov,* including any personal and/or business confidential information provided. To confirm receipt of your comment(s), please check *www.regulations.gov,* approximately two-to-three days after submission to verify posting.

FOR FURTHER INFORMATION CONTACT: Zenaida Delgado, Procurement Analyst, at telephone 202–969–7207, or *zenaida.delgado@gsa.gov.*

SUPPLEMENTARY INFORMATION:

A. OMB Control Number, Title, and Any Associated Form(s)

9000–0144, Payment by Electronic Fund Transfer-Other than System for Award Management.

B. Need and Uses

This clearance covers the information that contractors must submit to comply with the following Federal Acquisition Regulation (FAR) requirement:

• *52.232–34, Payment by Electronic Funds Transfer—Other than System for Award Management.* This clause requires contractors to provide the following information to enable the Government to make payments under the contract by electronic funds transfer (EFT):

(1) The contract number (or other procurement identification number).

(2) The Contractor's name and remittance address, as stated in the contract(s).

(3) The signature (manual or electronic, as appropriate), title, and telephone number of the Contractor official authorized to provide this information.

(4) The name, address, and 9-digit Routing Transit Number of the Contractor's financial agent.

(5) The Contractor's account number and the type of account (checking, saving, or lockbox).

(6) If applicable, the Fedwire Transfer System telegraphic abbreviation of the Contractor's financial agent.

(7) If applicable, the Contractor shall also provide the name, address, telegraphic abbreviation, and 9-digit Routing Transit Number of the correspondent financial institution receiving the wire transfer payment if the Contractor's financial agent is not directly on-line to the Fedwire Transfer System; and, therefore, not the receiver of the wire transfer payment.

The burden to provide the information required by the FAR clause

at 52.232–33, Payment by Electronic Funds Transfer—System for Award Management, is covered by OMB Control Number 9000–0159, System for Award Management Registration (SAM). OMB Control Number 9000–0159 accounts for new registrations and renewals in SAM, which includes providing the EFT information.

C. Annual Burden

Respondents: 3,196.
Total Annual Responses: 3,196.
Total Burden Hours: 1,598.
Obtaining Copies: Requesters may obtain a copy of the information collection documents from the GSA Regulatory Secretariat Division by calling 202–501–4755 or emailing *GSARegSec@gsa.gov.* Please cite OMB Control No. 9000–0144, Payment by Electronic Fund Transfer-Other than System for Award Management.

William F. Clark,

Director, Office of Government-Wide Acquisition Policy, Office of Acquisition Policy, Office of Government-wide Policy.

[FR Doc. 2020–23637 Filed 10–23–20; 8:45 am]

BILLING CODE 6820–EP–P

DEPARTMENT OF HEALTH AND HUMAN SERVICES

Agency for Healthcare Research and Quality

Meeting of the National Advisory Council for Healthcare Research and Quality

AGENCY: Agency for Healthcare Research and Quality (AHRQ), HHS.

ACTION: Notice of public meeting.

SUMMARY: This notice announces a meeting of the National Advisory Council for Healthcare Research and Quality.

DATES: The meeting will be held on Tuesday, November 10, 2020, from 10:00 a.m. to 2:00 p.m.

ADDRESSES: The meeting will be held virtually.

FOR FURTHER INFORMATION CONTACT: Jaime Zimmerman, Designated Management Official, at the Agency for Healthcare Research and Quality, 5600 Fishers Lane, Mail Stop 06E37A, Rockville, Maryland 20857, (301) 427–1456. For press-related information, please contact Bruce Seeman at (301) 427–1998 or *Bruce.Seeman@AHRQ.hhs.gov.*

Closed captioning will be provided during the meeting. If another reasonable accommodation for a disability is needed, please contact the Food and Drug Administration (FDA) Office of Equal Employment Opportunity and Diversity Management on (301) 827–4840, no later than Monday, October 26, 2020. The agenda, roster, and minutes will be available from Ms. Heather Phelps, Committee Management Officer, Agency for Healthcare Research and Quality, 5600 Fishers Lane, Rockville, Maryland, 20857. Ms. Phelps' phone number is (301) 427–1128.

SUPPLEMENTARY INFORMATION:

I. Purpose

In accordance with section 10(a) of the Federal Advisory Committee Act, 5 U.S.C. App., this notice announces a meeting of the National Advisory Council for Healthcare Research and Quality (the Council). The Council is authorized by Section 941 of the Public Health Service Act, 42 U.S.C. 299c. In accordance with its statutory mandate, the Council is to advise the Secretary of the Department of Health and Human Services and the Director of AHRQ on matters related to AHRQ's conduct of its mission including providing guidance on (A) priorities for health care research, (B) the field of health care research including training needs and information dissemination on health care quality and (C) the role of the Agency in light of private sector activity and opportunities for public private partnerships. The Council is composed of members of the public, appointed by the Secretary, and Federal ex-officio members specified in the authorizing legislation.

II. Agenda

On Tuesday, November 10, 2020, the Council meeting will convene at 10:00 a.m., with the call to order by the Council Chair and approval of previous Council summary notes. The meeting will begin with an update on AHRQ's recent accomplishments in Research, Practice Improvements and Data and Analytics. The agenda will also include an AHRQ COVID–19 Update, a discussion on Quality Measurement Enterprise and feedback on the Strategic Plan for the PCOR Trust Fund. The meeting will adjourn at 2:00 p.m. The meeting is open to the public. For information regarding how to access the meeting as well as other meeting details, including information on how to make a public comment, please go to *https://www.ahrq.gov/news/events/nac/.* The final agenda will be available on the AHRQ website no later than Tuesday, November 3, 2020.

Dated: October 20, 2020.

Marquita Cullom-Stott,

Associate Director.

[FR Doc. 2020–23582 Filed 10–23–20; 8:45 am]

BILLING CODE 4160–90–P

DEPARTMENT OF HEALTH AND HUMAN SERVICES

Centers for Disease Control and Prevention

Notice of Closed Meeting

Pursuant to section 10(d) of the Federal Advisory Committee Act, as amended, notice is hereby given of the following meeting.

The meeting will be closed to the public in accordance with the provisions set forth in sections 552b(c)(4) and 552b(c)(6), Title 5 U.S.C., as amended, and the Determination of the Director, Strategic Business Initiatives Unit, Office of the Chief Operating Officer, CDC, pursuant to Public Law 92–463. The grant applications and the discussions could disclose confidential trade secrets or commercial property such as patentable material, and personal information concerning individuals associated with the grant applications, the disclosure of which would constitute a clearly unwarranted invasion of personal privacy.

Name of Committee: Disease, Disability, and Injury Prevention and Control Special Emphasis Panel (SEP)—PAR 15–303, Occupational Safety and Health Education and Research Centers (ERC).

Date: February 23–25, 2021.

Time: 8:00 a.m.–5:00 p.m., EST.

Place: Virtual Meeting.

Agenda: To review and evaluate grant applications.

For Further Information Contact: Michael Goldcamp, Ph.D., Scientific Review Officer, Office of Extramural Programs, CDC, 1095 Willowdale Road, Morgantown, West Virginia 26505, Telephone: (304) 285–5951, *MGoldcamp@cdc.gov.*

The Director, Strategic Business Initiatives Unit, Office of the Chief Operating Officer, Centers for Disease Control and Prevention, has been delegated the authority to sign **Federal Register** notices pertaining to announcements of meetings and other committee management activities, for both the Centers for Disease Control and

Prevention and the Agency for Toxic Substances and Disease Registry.

Kalwant Smagh,

Director, Strategic Business Initiatives Unit, Office of the Chief Operating Officer, Centers for Disease Control and Prevention.

[FR Doc. 2020–23586 Filed 10–23–20; 8:45 am]

BILLING CODE 4163–18–P

DEPARTMENT OF HEALTH AND HUMAN SERVICES

Centers for Disease Control and Prevention

Notice of Closed Meeting

Pursuant to section 10(d) of the Federal Advisory Committee Act, as amended, notice is hereby given of the following meeting.

The meeting will be closed to the public in accordance with the provisions set forth in sections 552b(c)(4) and 552b(c)(6), Title 5 U.S.C., as amended, and the Determination of the Director, Strategic Business Initiatives Unit, Office of the Chief Operating Officer, CDC, pursuant to Public Law 92–463. The grant applications and the discussions could disclose confidential trade secrets or commercial property such as patentable material, and personal information concerning individuals associated with the grant applications, the disclosure of which would constitute a clearly unwarranted invasion of personal privacy.

Name of Committee: Disease, Disability, and Injury Prevention and Control Special Emphasis Panel (SEP)—PAR 15–312, State Occupational Safety and Health Surveillance Program (U60).

Date: January 25–27, 2021.

Time: 8:00 a.m.–5:00 p.m., EST.

Place: Virtual Meeting.

Agenda: To review and evaluate grant applications.

For Further Information Contact: Michael Goldcamp, Ph.D., Scientific Review Officer, Office of Extramural Programs, CDC, 1095 Willowdale Road, Morgantown, West Virginia 26505, Telephone: (304) 285–5951, *MGoldcamp@cdc.gov.*

The Director, Strategic Business Initiatives Unit, Office of the Chief Operating Officer, Centers for Disease Control and Prevention, has been delegated the authority to sign **Federal Register** notices pertaining to announcements of meetings and other committee management activities, for both the Centers for Disease Control and Prevention and the Agency for Toxic Substances and Disease Registry.

Kalwant Smagh,

Director, Strategic Business Initiatives Unit, Office of the Chief Operating Officer, Centers for Disease Control and Prevention.

[FR Doc. 2020–23585 Filed 10–23–20; 8:45 am]

BILLING CODE 4163–18–P

DEPARTMENT OF HEALTH AND HUMAN SERVICES

Food and Drug Administration

[Docket No. FDA–2020–N–1869]

Alignment of Third-Party Food Safety Standards With Food Safety Regulations: Notice of Pilot Program

AGENCY: Food and Drug Administration, HHS.

ACTION: Notice.

SUMMARY: The Food and Drug Administration (FDA, the Agency, or we) is seeking requests for participation from members of the public, including owners of third-party human food safety standards, interested in participating in a voluntary pilot program to evaluate third-party food safety standards. On July 13, 2020, FDA announced the New Era of Smarter Food Safety Blueprint and the desire to explore the increased use of reliable third-party audits to help ensure safer food, including exploring the use of reliable audit data in risk-prioritization for FDA regulatory activities, for example, with respect to inspections of both imported and domestically produced foods. Under the pilot program, FDA will assess third-party food safety standards for alignment with certain FDA food safety regulations. Knowing that these third-party standards align with certain FDA food safety regulations would give those relying on audits conducted to those standards confidence that they are meeting certain FDA requirements for supplier verification audits. The pilot will enable FDA to gain information and experience that will allow the Agency to evaluate the resources and tools required to conduct alignment reviews.

DATES: The pilot will conclude October 26, 2021.

ADDRESSES: Submit written or electronic submissions for the pilot program to *StandardsAlignmentPilot@fda.hhs.gov.*

FOR FURTHER INFORMATION CONTACT: Franciel Ikeji, Center for Food Safety and Applied Nutrition, Food and Drug Administration, 5001 Campus Dr., College Park, MD 20740, 240–402–4971.

SUPPLEMENTARY INFORMATION:

I. Background

Ensuring the safety of food for human and animal use is a shared responsibility between the public and private sectors. FDA has established regulatory standards, inspects facilities, and may take action if there are violations. But it is primarily the responsibility of industry to ensure that food products intended for human and animal consumption in the United States are safe and meet applicable food safety requirements. The FDA Food Safety Modernization Act (FSMA) (Pub. L. 111–353) modified the Federal Food, Drug, and Cosmetic Act (FD&C Act) (21 U.S.C. 301, *et seq.*.) to establish a framework that focuses on prevention and recognizes the important part we all play in protecting consumers from unsafe food.

FSMA and the implementing regulations place new obligations on certain entities in the food industry to verify that their suppliers are meeting FDA safety standards. More specifically, three regulations that FDA issued under FSMA have supplier verification requirements. Those regulations are the Current Good Manufacturing Practice, Hazard Analysis, and Risk-Based Preventive Controls for Human Food (PCHF) regulation (part 117 (21 CFR part 117)); the Current Good Manufacturing Practice, Hazard Analysis, and Risk-Based Preventive Controls for Food for Animals (PCAF) regulation (part 507 (21 CFR part 507)); and Foreign Supplier Verification Programs for Food Importers (FSVP) regulation (21 CFR part 1, subpart L). Subparts A, C, D, E, F, and G of part 117 in the PCHF regulation include requirements for domestic and foreign facilities that are required to register under section 415 of the FD&C Act (21 U.S.C. 350d) to conduct a hazard analysis and implement risk-based preventive controls for human food (the human food preventive controls requirements). Subpart G of part 117 requires the receiving facility to establish and implement a written supply-chain program (21 CFR 117.405(a) and (b)) and conduct appropriate supplier verification activities for those raw materials and other ingredients for which the receiving facility has identified a hazard requiring a supply-chain-applied control (21 CFR 117.425 and 117.415(a)(3)(iii)). Generally, when a hazard in a raw material or other ingredient will be controlled by the supplier and is one for which there is a reasonable probability that exposure to the hazard will result in serious adverse health consequences or death, the

appropriate supplier verification activity is an onsite audit of the supplier, and it must be conducted before using the food and at least annually thereafter (§ 117.430(b)(1) (21 CFR 117.430(b)(1))).

For animal food facilities that are required to register, subparts A, C, D, E, and F of part 507 in PCAF include requirements to conduct a hazard analysis and implement risk-based preventive controls for animal food (the animal food preventive controls requirements). Subpart E of part 507 establishes requirements, similar to those in PCHF, for a supply-chain program for those raw materials and other ingredients for which a receiving facility has identified a hazard requiring a supply-chain-applied control.

Under the FSVP regulation, FSVP importers are required to develop, maintain, and follow a foreign supplier verification program that provides adequate assurances that imported food meets applicable U.S. food safety standards. The FSVP regulation requires importers to conduct a hazard analysis to determine whether there are any hazards that require a control (21 CFR 1.504) and, based on the hazard analysis, determine the appropriate type of verification activity as well as the frequency of conducting the activity. When a hazard in a food is controlled by the foreign supplier and is one for which there is a reasonable probability that exposure to the hazard will cause serious adverse health consequences or death to humans or animals, the default verification activity is to conduct an annual onsite audit before initially importing the food from the supplier and at least annually thereafter (§ 1.506(d)(2) (21 CFR 1.506(d)(2))).

In all three regulations, audits are not required if the receiving facility or importer has made a written determination that other verification activities and/or less frequent onsite auditing of the supplier provide adequate verification. See §§ 1.506(d)(2), 117.430(b)(2), and 507.130(b)(2).

The FSMA supply-chain programs do not require these annual onsite audits to be conducted by auditors accredited under FDA's Accredited Third-Party Certification Programs (21 CFR part 1, subpart M), which established a voluntary program for the accreditation of third-party certification bodies to conduct food safety audits and issue certifications for foreign facilities. The PCHF, PCAF, and FSVP regulations do, however, require the onsite audits under these regulations to be conducted by ''qualified auditors. '' (A qualified auditor means a person who has the technical expertise obtained through education, training, or experience (or a combination thereof) necessary to perform the auditing function). See 21 CFR 1.500, 117.3, and 507.3. Importantly, too, the audits must consider applicable FDA regulations. See 21 CFR 1.506(e)(1)(i), 117.435, and 507.135.

FDA is aware that there are a variety of third-party food safety standards used by industry to assess a supplier's performance and that importers and receiving facilities may voluntarily rely on audits that use those private standards. Because the supply-chain verification provisions of PCHF, PCAF, and FSVP require that audits consider applicable FDA food safety regulations, importers and receiving facilities may seek assurances regarding how these standards align with FDA food safety standards. Having such assurances may provide importers and receiving facilities with confidence that they can use audits conducted under the standards to fulfill the PCHF, PCAF, and FSVP requirements for supplier verification. This pilot will assess whether some of these third-party food safety standards are aligned with food safety requirements in two specific FDA human food safety regulations: The PCHF regulation and the Standards for the Growing, Harvesting, Packing, and Holding of Produce for Human Consumption (Produce Safety) regulation (21 CFR part 112). The pilot will not assess alignment with FDA animal food safety regulations.

FDA has published templates that may be used to help receiving facilities, importers, and other stakeholders compare the third-party food safety standards used in an audit to the food safety requirements in applicable FDA regulations (FDA Audit Comparison Templates) *https://www.fda.gov/Food/GuidanceRegulation/FSMA/ucm602286.htm.* The templates are arranged in a table format for easy comparison of the third-party food safety standards to the food safety requirements of FDA regulations.

While these templates are useful, the pilot will allow us to assess how the third-party food safety standards used in audits align with human food safety requirements in the PCHF and the Produce Safety regulations. We expect that FDA alignment determinations would create efficiencies for industry, so that importers and receiving facilities know whether the third-party food safety standards used to audit their suppliers adequately consider food safety requirements in two of FDA's regulations. Similarly, we expect that it would be more efficient for FDA investigators to know if the standards against which a supplier was audited align with FDA regulations, so that the investigators can more efficiently determine whether importers and receiving facilities are in compliance with the FSMA supply-chain verification requirements for audits. The pilot will assist FDA in gathering information to determine whether these expectations are accurate.

The pilot will also evaluate the process for determining alignment, including the resources required for FDA to review and assess third-party standards for alignment with relevant FDA regulations. While the pilot will be focused on human food safety requirements in the PCHF and Produce Safety regulations, any program that FDA puts in place as a result of the Agency's experience with the pilot would likely also include a review of standards for food for animal consumption to assess and determine alignment of third-party animal food safety standards to the food safety requirements in the PCAF regulation.

We also note that the goals of this pilot align with the ''FDA Strategy for the Safety of Imported Food,'' which includes an objective that FDA take into account the public health assurances of reliable audits such as those issued under FDA's Accredited Third-Party Certification Program or pursuant to other assurance programs aligned with FDA food safety requirements. FDA recognizes that audits can provide valuable public health assurances if they are reliable and if the standards under which audits are conducted are aligned with relevant FDA food safety regulations. The goals of the program also align with the New Era of Smarter Food Safety Blueprint. As explained in the Blueprint, FDA is considering the benefits of using reliable audit information in resource allocation decision making and risk prioritization of regulatory activities such as import screening to ensure that food offered for import meets U.S. food safety requirements. Because this pilot is only focused on assessing third-party food safety standards, and not the overall quality of audit programs or the qualifications of auditors, we believe that the pilot will help evaluate the requirements for making alignment determinations as an important step in determining the reliability of third-party audits.

II. FDA Determination of Alignment of Third-Party Food Safety Standards Voluntary Pilot Program

A. Scope and Selection Attributes

FDA is seeking requests for participation from members of the public, including owners of third-party human food safety standards, who are interested in participating in a voluntary pilot program to determine whether third-party food safety standards align with food safety requirements in the PCHF and the Produce Safety regulations. Upon being selected to participate in the program, participants will submit their standards for assessment. FDA plans to select and assess up to five private third-party human food safety standards for alignment with food safety requirements in the PCHF or the Produce Safety regulation. Participants in the pilot program will be asked to provide FDA with technical feedback on the pilot. The Agency will use its discretion in choosing participants for assessment based on (in no particular order):

(1) The order the requests for participation are received;

(2) the desired diversity of third-party human food safety standards for assessment in the pilot (*e.g.,* PCHF, Produce Safety); and

(3) the Agency's determination of available resources to conduct the assessment given the level of effort and other priorities.

FDA reserves the right to request additional information or clarification from participants in the pilot and to rescind participation if the additional information or clarification is not promptly and accurately provided.

B. Duration

The pilot will run for 1 year from the date of publication of this notice and will conclude on October 26, 2021. FDA reserves the right to extend the pilot for more time as needed. To assure we have adequate time to assess the standards during the pilot period, we are asking members of the public, including owners of third-party human food safety standards, to submit their request to participate in the pilot program by November 25, 2020.

C. Submission of Requests To Participate

Members of the public, including owners of third-party human food safety standards, that are interested in participating should submit a written request to participate to Franciel Ikeji (see **FOR FURTHER INFORMATION CONTACT**). Electronic requests should be submitted to *StandardsAlignmentPilot@fda.hhs.gov.* We strongly encourage interested persons to electronically submit their requests to participate. Written and electronic requests to participate in the pilot program should be submitted by November 25, 2020.

The request to participate should include the following information: Company and contact name; contact phone number; and contact email address. Additionally, although not required for consideration, FDA is particularly interested in whether you are the owner of a third-party food safety standard, and the type of food safety standard you have developed (*e.g.,* produce safety, human processed food). For a limited number of applicants that FDA identifies as possible candidates for participation in the pilot, FDA may ask you to submit a completed FDA Food Safety Audit Comparison Template *https://www.fda.gov/Food/GuidanceRegulation/FSMA/ucm602286.htm.* If the pilot participant chooses to submit an alternative comparison tool, the format should enable FDA to easily compare the third-party food safety standard to the relevant FDA regulations (*i.e.,* placing the relevant requirements of FDA's regulations in numerical order to the left of any third-party food safety standards). FDA may also ask pilot participants for additional information on submitted food safety standards.

D. Assessment and Alignment of Program Standards

The pilot program will be conducted from October 26, 2020 to October 26, 2021 and may be extended as needed. Each person that submits a request to participate will be notified that FDA has received the request. This notification only acknowledges that FDA has received the request and does not guarantee that FDA will accept you for participation in the pilot. By the conclusion of the pilot, participants will be notified as to whether FDA determined the food safety standard to be in alignment or not in alignment with the relevant FDA regulation.

FDA will publish information on its website regarding the third-party standards that FDA determines to be in alignment with FDA regulations.

E. Evaluation of Pilot Program

FDA intends to evaluate the pilot program on several factors, including, but not limited to, the resources required to review and assess third-party standards for alignment with relevant FDA regulations, the ability of pilot participants to provide adequate information to enable FDA to make a determination of alignment, and whether FDA Audit Comparison Templates are a helpful tool in making alignment determinations. After FDA evaluates the pilot program, the Agency will utilize the information to evaluate the resources and tools required to conduct alignment reviews.

Dated: October 16, 2020.

Lauren K. Roth,

Acting Principal Associate Commissioner for Policy.

[FR Doc. 2020–23398 Filed 10–23–20; 8:45 am]

BILLING CODE 4164–01–P

DEPARTMENT OF HEALTH AND HUMAN SERVICES

National Committee on Vital and Health Statistics: Meeting

Pursuant to the Federal Advisory Committee Act, the Department of Health and Human Services (HHS) announces the following advisory committee meeting.

Name: National Committee on Vital and Health Statistics (NCVHS), Full Committee Meeting.

Dates and Times: Wednesday, November 18, 2020: 10:00 a.m.–5:30 p.m. EST.

Thursday, November 19, 2020: 11:30 a.m.–4:00 p.m. EST.

Place: Virtual.

Status: Open.

Purpose: At the November 18–19, 2020, meeting, the Committee will receive briefings from HHS officials, hold discussions on several health data policy topics and discuss its work plan for the upcoming 12-month period. The Committee will welcome four new members.

The Subcommittee on Standards will provide an update on follow up work from its hearing held in August 2020 to solicit information about the costs and benefits of a new operating rule for connectivity and two operating rules for the prior authorization transaction proposed by the Council for Affordable Quality Healthcare (CAQH), Committee on Operating Rules for Information Exchange (CORE). The Committee will also consider recommendations anticipated from the Office of the National Coordinator for Health Information Technology's (ONC) Health Information Technology Advisory Committee (HITAC), Task Force on Intersection of Clinical and Administrative Data (ICAD), on which four NCVHS members have participated. The Committee will consider next steps for a project to identify and recommend a path toward convergence of administrative and

clinical data in light of the Task Force recommendations. The Committee has invited a representative of the new Office of Burden Reduction and Health Informatics, Centers for Medicare and Medicaid Services, to provide an update on the work of the Office and the potential intersection with the NCVHS work plan.

The Subcommittee on Privacy, Confidentiality, and Security will provide an update on the September 14, 2020, hearing that focused on data collection and use during a public health emergency and identify next steps for development of guidelines for methods and approaches to collect, use, protect, and share data responsibly during a pandemic or long-term nationwide public health emergency.

Members will consider major themes for the NCVHS 14th Report to Congress, which is planned for release in the first half of 2021. Members will consider and discuss priorities for Committee focus and revise the Committee work plan based on the two days of meeting proceedings.

A public comment period will be offered on both days. Meeting times and topics are subject to change. Please refer to the agenda posted at the NCVHS website for any updates.

Contact Person for More Information: Substantive program information may be obtained from Rebecca Hines, MHS, Executive Secretary, NCVHS, National Center for Health Statistics, Centers for Disease Control and Prevention, 3311 Toledo Road, Hyattsville, Maryland 20782, or via electronic mail to *vgh4@cdc.gov*; or by telephone (301) 458–4715. Summaries of meetings and a roster of Committee members are available on the home page of the NCVHS website, *https://ncvhs.hhs.gov/,* where further information including an agenda and instructions to access the broadcast of the meeting will also be posted.

Should you require reasonable accommodation, please contact the CDC Office of Equal Employment Opportunity on (770) 488–3210 as soon as possible.

Sharon Arnold,

Associate Deputy Assistant Secretary for Planning and Evaluation, Science and Data Policy, Office of the Assistant Secretary for Planning and Evaluation.

[FR Doc. 2020–23668 Filed 10–23–20; 8:45 am]

BILLING CODE 4150–05–P

DEPARTMENT OF HEALTH AND HUMAN SERVICES

National Institutes of Health

National Library of Medicine; Amended Notice of Meeting

Notice is hereby given of a change in the meeting of the Special Emphasis Panel, December 3, 2020, 9:00 a.m. to 5:30 p.m. This notice was published in the **Federal Register** on September 29, 2020, 85 FR 189, Page 61020.

This notice is being amended to change the date and time to December 17, 2020 from 10:00 a.m. to 5:30 p.m. The meeting is closed to the public.

Dated: October 20, 2020.

Ronald J. Livingston, Jr.,

Program Analyst, Office of Federal Advisory Committee Policy.

[FR Doc. 2020–23584 Filed 10–23–20; 8:45 am]

BILLING CODE 4140–01–P

DEPARTMENT OF HEALTH AND HUMAN SERVICES

National Institutes of Health

Center for Scientific Review; Notice of Closed Meetings

Pursuant to section 10(d) of the Federal Advisory Committee Act, as amended, notice is hereby given of the following meetings.

The meetings will be closed to the public in accordance with the provisions set forth in sections 552b(c)(4) and 552b(c)(6), Title 5 U.S.C., as amended. The grant applications and the discussions could disclose confidential trade secrets or commercial property such as patentable material, and personal information concerning individuals associated with the grant applications, the disclosure of which would constitute a clearly unwarranted invasion of personal privacy.

Name of Committee: Center for Scientific Review Special Emphasis Panel; Ocular Surface, Cornea, Anterior Segment Glaucoma and Refractive Error.

Date: November 17, 2020.

Time: 10:00 a.m. to 6:00 p.m.

Agenda: To review and evaluate grant applications.

Place: National Institutes of Health, 6701 Rockledge Drive, Bethesda, MD 20892 (Virtual Meeting).

Contact Person: Julius Cinque, MS, Scientific Review Officer, Center for Scientific Review, National Institutes of Health, 6701 Rockledge Drive, Room 5186, MSC 7846, Bethesda, MD 20892, (301) 435–1252, *cinquej@csr.nih.gov*.

Name of Committee: Center for Scientific Review Special Emphasis Panel; Member Conflict: Topics in Metabolism.

Date: November 20, 2020.

Time: 1:00 p.m. to 4:00 p.m.

Agenda: To review and evaluate grant applications.

Place: National Institutes of Health, Rockledge II, 6701 Rockledge Drive, Bethesda, MD 20892 (Telephone Conference Call).

Contact Person: Hui Chen, MD, Scientific Review Officer, Center for Scientific Review, National Institutes of Health, 6701 Rockledge Drive, Room 6164, Bethesda, MD 20892, (301) 435–1044, *chenhui@csr.nih.gov.*

Name of Committee: Center for Scientific Review Special Emphasis Panel; Small Business: Disease Prevention and Management, Risk Reduction and Health Behavior Change.

Date: November 23, 2020.

Time: 9:00 a.m. to 5:00 p.m.

Agenda: To review and evaluate grant applications.

Place: National Institutes of Health, Rockledge II, 6701 Rockledge Drive, Bethesda, MD 20892 (Virtual Meeting).

Contact Person: Michael J McQuestion, Ph.D., Scientific Review Officer, Center for Scientific Review, National Institutes of Health, 6701 Rockledge Drive, Room 3114 MSC 7808, Bethesda, MD 20892, (301) 480–1276, *mike.mcquestion@nih.gov*.

Name of Committee: Center for Scientific Review Special Emphasis Panel; PAR–19–367: Maximizing Investigators' Research Award (R35—Clinical Trial Optional).

Date: November 23–24, 2020.

Time: 10:00 a.m. to 6:00 p.m.

Agenda: To review and evaluate grant applications.

Place: National Institutes of Health, Rockledge II, 6701 Rockledge Drive, Bethesda, MD 20892 (Virtual Meeting).

Contact Person: David Balasundaram, Ph.D., Scientific Review Officer, Center for Scientific Review, National Institutes of Health, 6701 Rockledge Drive, Room 5189, MSC 7840, Bethesda, MD 20892, (301) 435–1022, *balasundaramd@csr.nih.gov.*

Name of Committee: Center for Scientific Review Special Emphasis Panel; PAR–20–131: Mammalian Models for Translational Research.

Date: November 23, 2020.

Time: 10:00 a.m. to 6:00 p.m.

Agenda: To review and evaluate grant applications.

Place: National Institutes of Health, Rockledge II, 6701 Rockledge Drive, Bethesda, MD 20892 (Virtual Meeting).

Contact Person: Malaya Chatterjee, Ph.D., Scientific Review Officer, Center for Scientific Review, National Institutes of Health,6701 Rockledge Drive, Room 6192, MSC 7804, Bethesda, MD 20892, (301) 806–2515, *chatterm@csr.nih.gov*.

Name of Committee: Infectious Diseases and Microbiology Integrated Review Group; HIV Molecular Virology, Cell Biology, and Drug Development Study Section.

Date: November 23–24, 2020.

Time: 10:00 a.m. to 7:00 p.m.

Agenda: To review and evaluate grant applications.

Place: National Institutes of Health, Rockledge II, 6701 Rockledge Drive, Bethesda, MD 20892 (Virtual Meeting).

Contact Person: Kenneth A Roebuck, Ph.D., Scientific Review Officer, Center for Scientific Review, National Institutes of Health, 6701 Rockledge Drive, Room 5214, MSC 7852, Bethesda, MD 20892, (301) 435–1166, *roebuckk@csr.nih.gov*.

Name of Committee: Center for Scientific Review Special Emphasis Panel; Member Conflict: Receptors and Cell Cycle.

Date: November 23, 2020.

Time: 1:00 p.m. to 5:00 p.m.

Agenda: To review and evaluate grant applications.

Place: National Institutes of Health, Rockledge II, 6701 Rockledge Drive, Bethesda, MD 20892 (Virtual Meeting).

Contact Person: Kevin Czaplinski, Ph.D., Scientific Review Officer, Center for Scientific Review, 6701 Rockledge Drive, Bethesda, MD 20892. (301) 435–0000, *czaplinskik2@csr.nih.gov*.

(Catalogue of Federal Domestic Assistance Program Nos. 93.306, Comparative Medicine; 93.333, Clinical Research, 93.306, 93.333, 93.337, 93.393–93.396, 93.837–93.844, 93.846–93.878, 93.892, 93.893, National Institutes of Health, HHS)

Dated: October 20, 2020.

Miguelina Perez,

Program Analyst, Office of Federal Advisory Committee Policy.

[FR Doc. 2020–23583 Filed 10–23–20; 8:45 am]

BILLING CODE 4140–01–P

DEPARTMENT OF HEALTH AND HUMAN SERVICES

National Institutes of Health

The National Institutes of Health (NIH) Sexual & Gender Minority Research Listening Session

AGENCY: National Institutes of Health, HHS.

ACTION: Notice.

SUMMARY: The National Institutes of Health (NIH) Sexual & Gender Minority Research Office (SGMRO) will be holding its second annual listening session with Sexual & Gender Minority (SGM)-focused organizations. The primary objective of the NIH's listening session is to hear from community stakeholders about what issues are on their minds regarding SGM-related research and related activities at NIH. The goal is to hold an annual listening session every year, to provide different SGM focused organizations an opportunity to speak.

DATES: The listening session with the SGM community will be held on November 19, 2020, at 1:00 p.m. ET.

ADDRESSES: The meeting will be held virtually as a WebEx Event, and it will be open to the public to listen. Information about the meeting and registration to attend are at this link: *https://dpcpsi.nih.gov/sgmro/listening-session.*

FOR FURTHER INFORMATION CONTACT: Irene Avila, Ph.D., Assistant Director, Sexual & Gender Minority Research Office (SGMRO), 6555 Rock Spring Drive, Rm. 2SE31J, Bethesda, MD 20817, *avilai@mail.nih.gov,* 301–594–9701.

SUPPLEMENTARY INFORMATION: ''Sexual and gender minority'' is an umbrella term that includes, but is not limited to, individuals who identify as lesbian, gay, bisexual, asexual, transgender, Two-Spirit, queer, and/or intersex. Individuals with same-sex or -gender attractions or behaviors and those with a difference in sex development are also included. These populations also encompass those who do not self-identify with one of these terms but whose sexual orientation, gender identity or expression, or reproductive development is characterized by non-binary constructs of sexual orientation, gender, and/or sex.

In accordance with Section 404N of the 21st Century Cures Act (Pub. L. 114–255), the Sexual and Gender Minority Research Office (SGMRO) coordinates sexual and gender minority (SGM)-related research and activities by working directly with NIH Institutes, Centers, and Offices. The Office was officially established in September 2015 within the NIH Division of Program Coordination, Planning, and Strategic Initiatives in the Office of the Director.

The SGMRO has the following operational goals: (1) Advance rigorous research on the health of SGM populations in both the extramural and intramural research communities; (2) expand SGM health research by fostering partnerships and collaborations with a strategic array of internal and external stakeholders; (3) foster a highly skilled and diverse workforce in SGM health research; and (4) encourage data collection related to SGM populations in research and the biomedical research workforce.

Listening Session Details

The listening session event will be an NIH-wide effort, with representation from the SGMRO and other NIH Institutes, Centers, and Offices. The listening session will be open to the public to listen in; comments submitted via email will be accepted post-listening session. The session will be recorded a posted on the SGMRO website approximately one month post-session. Comments, questions, or feedback can be shared with *SGMRO@nih.gov.* SGMRO will invite approximately 13 SGM-focused organizations to present at the listening session. Selection of the organizations will be based on the diversity of their missions and efforts.

Dated: October 19, 2020.

Lawrence A. Tabak,

Principal Deputy Director, National Institutes of Health.

[FR Doc. 2020–23589 Filed 10–23–20; 8:45 am]

BILLING CODE 4140–01–P

DEPARTMENT OF HEALTH AND HUMAN SERVICES

National Institutes of Health

National Cancer Institute; Notice of Closed Meetings

Pursuant to section 10(d) of the Federal Advisory Committee Act, as amended, notice is hereby given of the following meetings.

The meetings will be closed to the public in accordance with the provisions set forth in sections 552b(c)(4) and 552b(c)(6), Title 5 U.S.C., as amended. The grant applications and the discussions could disclose confidential trade secrets or commercial property such as patentable material, and personal information concerning individuals associated with the grant applications, the disclosure of which would constitute a clearly unwarranted invasion of personal privacy.

Name of Committee: National Cancer Institute Special Emphasis Panel; R13 Conference Grant Review.

Date: November 12, 2020.

Time: 10:00 a.m. to 6:00 p.m.

Agenda: To review and evaluate grant applications.

Place: National Cancer Institute Shady Grove, 9609 Medical Center Drive, Room 7W552, Rockville, MD 20850 (Telephone Conference Call).

Contact Person: Jeanette Irene Marketon, Ph.D., Scientific Review Officer, Program Coordination and Referral Branch, Division of Extramural Activities, National Cancer Institute, NIH, 9609 Medical Center Drive, Room 7W552, Rockville, MD 20892, (240) 276–6780, *jeanette.marketon@nih.gov*.

Name of Committee: National Cancer Institute Special Emphasis Panel; Smoking Cessation & HIV R01/R21.

Date: November 19, 2020.

Time: 12:00 p.m. to 5:00 p.m.

Agenda: To review and evaluate grant applications.

Place: National Cancer Institute Shady Grove, 9609 Medical Center Drive, Room 7W102, Rockville, MD 20850 (Telephone Conference Call).

Contact Person: Shakeel Ahmad, Ph.D., Chief, Research Technology and Contract Review Branch, Division of Extramural Activities, National Cancer Institute, NIH, 9609 Medical Center Drive, Room 7W102, Rockville, MD 20850, 240–276–6442, *ahmads@mail.nih.gov*.

Name of Committee: National Cancer Institute Initial Review Group; Subcommittee A—Cancer Centers.

Date: December 3, 2020.

Time: 12:00 p.m. to 4:00 p.m.

Agenda: To review and evaluate grant applications.

Place: National Cancer Institute Shady Grove, 9609 Medical Center Drive, Room 7W530, Rockville, MD 20850 (Telephone Conference Call).

Contact Person: Shamala K. Srinivas, Ph.D., Associate Director, Scientific Review and Policy, Division of Extramural Activities, National Cancer Institute, NIH, 9609 Medical Center Drive, Room 7W530, Rockville, MD 20892, 240–276–6442, *ss537t@nih.gov*.

(Catalogue of Federal Domestic Assistance Program Nos. 93.392, Cancer Construction; 93.393, Cancer Cause and Prevention Research; 93.394, Cancer Detection and Diagnosis Research; 93.395, Cancer Treatment Research; 93.396, Cancer Biology Research; 93.397, Cancer Centers Support; 93.398, Cancer Research Manpower; 93.399, Cancer Control, National Institutes of Health, HHS)

Dated: October 20, 2020.

Patricia B. Hansberger,

Supervisory Program Analyst, Office of Federal Advisory Committee Policy.

[FR Doc. 2020–23577 Filed 10–23–20; 8:45 am]

BILLING CODE 4140–01–P

DEPARTMENT OF HEALTH AND HUMAN SERVICES

National Institutes of Health

National Institute of General Medical Sciences; Notice of Closed Meeting

Pursuant to section 10(d) of the Federal Advisory Committee Act, as amended, notice is hereby given of the following meeting.

The meeting will be closed to the public in accordance with the provisions set forth in sections 552b(c)(4) and 552b(c)(6), Title 5 U.S.C., as amended. The grant applications and the discussions could disclose confidential trade secrets or commercial property such as patentable material, and personal information concerning individuals associated with the grant applications, the disclosure of which would constitute a clearly unwarranted invasion of personal privacy.

Name of Committee: National Institute of General Medical Sciences Special Emphasis Panel; Review of K99/R00 Maximizing Opportunities for Scientific and Academic Independent Careers (MOSAIC) Postdoctoral Career Transition Award to Promote Diversity applications.

Date: November 17, 2020.

Time: 9:30 a.m. to 5:00 p.m.

Agenda: To review and evaluate grant applications.

Place: National Institutes of Health, Natcher Building, 45 Center Drive, Bethesda, MD 20892 (Virtual Meeting).

Contact Person: Rebecca H. Johnson, Ph.D., Scientific Review Officer, Office of Scientific Review, National Institute of General Medical Sciences, National Institutes of Health, Natcher Building, Room 3AN18C, 45 Center Drive, Bethesda, MD 20892, (301) 594–2771, *johnsonrh@nigms.nih.gov*.

(Catalogue of Federal Domestic Assistance Program Nos. 93.375, Minority Biomedical Research Support; 93.821, Cell Biology and Biophysics Research; 93.859, Pharmacology, Physiology, and Biological Chemistry Research; 93.862, Genetics and Developmental Biology Research; 93.88, Minority Access to Research Careers; 93.96, Special Minority Initiatives; 93.859, Biomedical Research and Research Training, National Institutes of Health, HHS)

Dated: October 20, 2020.

Miguelina Perez,

Program Analyst, Office of Federal Advisory Committee Policy.

[FR Doc. 2020–23578 Filed 10–23–20; 8:45 am]

BILLING CODE 4140–01–P

DEPARTMENT OF HEALTH AND HUMAN SERVICES

National Institutes of Health

National Library of Medicine; Notice of Closed Meetings

Pursuant to section 10(d) of the Federal Advisory Committee Act, as amended, notice is hereby given of the meetings.

The meetings will be closed to the public in accordance with the provisions set forth in sections 552b(c)(4) and 552b(c)(6), Title 5 U.S.C., as amended. The grant applications and the discussions could disclose confidential trade secrets or commercial property such as patentable materials, and personal information concerning individuals associated with the grant applications, the disclosure of which would constitute a clearly unwarranted invasion of personal privacy.

Name of Committee: Biomedical Informatics, Library and Data Sciences Review Committee.

Date: March 4, 2021.

Time: 9:00 a.m. to 5:30 p.m.

Agenda: To review and evaluate grant applications.

Place: Virtual Meeting.

Contact Person: Zoe E. Huang, MD, Chief Scientific Review Officer, Scientific Review Office, Extramural Programs, National Library of Medicine, NIH, 6705 Rockledge Drive, Suite 500, Bethesda, MD 20892–7968, 301–594–4937, *huangz@mail.nih.gov*.

(Catalogue of Federal Domestic Assistance Program No. 93.879, Medical Library Assistance, National Institutes of Health, HHS)

Dated: October 20, 2020.

Ronald J. Livingston, Jr.,

Program Analyst, Office of Federal Advisory Committee Policy.

[FR Doc. 2020–23576 Filed 10–23–20; 8:45 am]

BILLING CODE 4140–01–P

DEPARTMENT OF HEALTH AND HUMAN SERVICES

National Institutes of Health

Submission for OMB Review; 30-Day Comment Request; Collection of Grant and Contract Data That May Be of Interest to Historically Black Colleges and Universities (HBCUs) and Small Businesses (Office of the Director)

AGENCY: National Institutes of Health, HHS.

ACTION: Notice.

SUMMARY: In compliance with the Paperwork Reduction Act of 1995, the National Institutes of Health (NIH), Office of the Director, Office of Acquisitions and Logistics Management (OALM), Small Business Program Office (SBPO), has submitted to the Office of Management and Budget (OMB) a request for review and approval of the information collection listed below.

DATES: Comments regarding this information collection are best assured of having their full effect if received within 30-days of the date of this publication.

ADDRESSES: Written comments and recommendations for the proposed information collection should be sent within 30 days of publication of this notice to *www.reginfo.gov/public/do/PRAMain.* Find this particular information collection by selecting ''Currently under 30-day Review—Open for Public Comments'' or by using the search function.

FOR FURTHER INFORMATION CONTACT: To request more information on the proposed project or to obtain a copy of the data collection plans and instruments, contact: Rachel Kenlaw, Program Analyst, NIH, Office of the Director, Office of Acquisitions and Logistics Management, Small Business Program Office, 6100 Executive Blvd., Suite 6E01G, Rockville, MD 20852, or call non-toll-free number (301) 451–6827 or Email your request, including your address, to: *Rachel.Kenlaw@nih.gov.*

SUPPLEMENTARY INFORMATION: This proposed information collection was previously published in the **Federal Register** on October 30, 2019, page 23681 (84 FR 23681) and allowed 60

days for public comment. No public comments were received. The purpose of this notice is to allow an additional 30 days for public comment. The National Institutes of Health, Office of the Director, Office of Acquisitions and Logistics Management, Small Business Program Office, may not conduct or sponsor, and the respondent is not required to respond to, an information collection that has been extended, revised, or implemented on or after October 1, 1995 unless it displays a currently valid OMB control number

In compliance with Section 3507(a)(1)(D) of the Paperwork Reduction Act of 1995, the National Institutes of Health (NIH) has submitted to the Office of Management and Budget (OMB) a request for review and approval of the information collection listed below.

Proposed Collection: Collection of grant and contract data that may be of interest to Historically Black Colleges and Universities (HBCUs) and small businesses, 0925 0767, exp., date 05/31/2023, REVISION, Office of the Director, Office of Acquisitions and Logistics Management, Small Business Program Office, National Institutes of Health (NIH).

Need and Use of Information Collection: The revision includes registration for system access and smart matching of opportunities between HBCUs and small business. Additionally, the revision provides reporting functionality within the system that provides valuable insight to the NIH SBPO about the HBCUs and small businesses. The HBCUs and teaming partners are required to complete an application to participate in the Path to Excellence and Innovation (PEI) initiative. Presidential Executive Order 13779, *The White House Initiative to Promote Excellence and Innovation at HBCUs,* mandates agencies to assist in strengthening HBCU's ability for equitable participation in federal programs and explore new ways to improve the relationship between the federal government and HBCUs. This initiative establishes how each agency intends to increase the capacity of HBCUs to compete effectively for federal grants, contracts, and cooperative agreements.

PEI is a comprehensive program to increase the capacity of HBCUs as they pursue funding opportunities at NIH. The PEI provides a platform to increase transparency between HBCUs and NIH by promoting outreach events and training opportunities while providing technical assistance. Through this initiative the SBPO will assist HBCUs in identifying NIH contracts, grants, and other funding programs to increase their institutional biomedical research capacity. Currently, there are six HBCU participants and each selected a minimum of one small business teaming partner to pursue NIH funding opportunities with.

OMB approval is requested for 3 years. There are no costs to respondents other than their time. The total estimated annualized burden hours are 186.

ESTIMATED ANNUALIZED BURDEN HOURS

Form name	Type of respondent	Number of respondents	Number of responses per respondent	Average burden per response (in hours)	Total annual burden hour
HBCU Pre-Solicitation Portal for Contracts and Grants.	Private Sector	13	18	45/60	176
Application for Small Business	Private Sector	6	1	45/60	5
Application for Universities	Private Sector	7	1	45/60	5
Total		13	247		186

Dated: October 19, 2020.

Lawrence A. Tabak,

Principal Deputy Director, National Institutes of Health.

[FR Doc. 2020–23588 Filed 10–23–20; 8:45 am]

BILLING CODE 4140–01–P

DEPARTMENT OF HEALTH AND HUMAN SERVICES

National Institutes of Health

Submission for OMB Review; 30-Day Comment Request Identifying Experts in Prevention Science Methods To Include on NIH Review Panels, (Office of the Director, Office of Disease Prevention)

AGENCY: National Institutes of Health, HHS.

ACTION: Notice.

SUMMARY: In compliance with the requirement of the Paperwork Reduction Act of 1995, the National Institutes of Health (NIH) has submitted to the Office of Management and Budget (OMB) a request for review and approval of the information collection listed below.

DATES: Comments regarding this information collection are best assured of having their full effect if received within 30 days of the date of this publication.

ADDRESSES: Written comments and recommendations for the proposed information collection should be sent within 30 days of publication of this notice to *www.reginfo.gov/public/do/PRAMain.* Find this particular information collection by selecting ''Currently under 30-day Review—Open for Public Comments'' or by using the search function.

FOR FURTHER INFORMATION CONTACT: To request more information on the proposed project or to obtain a copy of the data collection plans and instruments, contact: Ms. Keisha L. Shropshire, ODP Project Clearance Liaison, NIH Office of Disease Prevention, 6100 Executive Blvd., Room 2B03, Bethesda, MD 20892 or call (301) 827–5561 or email your request, including your address, to *odp_prapubliccomments@od.nih.gov.* Formal requests for additional plans and instruments must be requested in writing.

SUPPLEMENTARY INFORMATION: This proposed information collection was previously published in the **Federal Register** on August 6, 2020, page 47805 (85 FR 47805) and allowed 60 days for public comment. No public comments were received. The purpose of this notice is to allow an additional 30 days for public comment. The Office of Disease Prevention (ODP), National Institutes of Health, may not conduct or sponsor, and the respondent is not required to respond to, an information collection that has been extended, revised, or implemented on or after October 1, 1995, unless it displays a currently valid OMB control number.

In compliance with Section 3507(a)(1)(D) of the Paperwork Reduction Act of 1995, the National Institutes of Health (NIH) has submitted to the Office of Management and Budget (OMB) a request for review and approval of the information collection listed below.

Proposed Collection: Identifying Experts in Prevention Science Methods to Include on NIH Review Panels, OMB# 0925–0728—REVISION, exp. 11/30/2020, Office of Disease Prevention (ODP), National Institutes of Health (NIH).

Need and Use of Information Collection: The Office of Disease Prevention (ODP) is the lead Office at the National Institutes of Health (NIH) responsible for assessing, facilitating, and stimulating research in disease prevention and health promotion, and disseminating the results of this research to improve public health. Prevention is preferable to treatment, and research on disease prevention is an important part of the NIH's mission. The knowledge gained from this research leads to stronger clinical practice, health policy, and community health programs. ODP collaborates with NIH, other Department of Health and Human Services (HHS) agencies, and other public and private partners to achieve the Office's mission and goals. One of ODP's priorities is to promote the use of the best available methods in prevention research and support the development of better study designs and research methods. One of our strategies is to help NIH Institutes, Centers, and Offices identify experts in prevention science methods to include on their peer review panels. This strengthens the panels and improves the quality of the prevention-related research supported by NIH. To identify experts in prevention science methods, we have developed online software that allows us to collect scientists' names, contact information, and resumes, as well as to have those scientists identify their level of expertise in a variety of prevention science methods and content areas. The data are used to populate a web-based tool that NIH staff can use to identify scientists with prevention-related research expertise in specific research methods and study designs for invitation to serve as a reviewer on an NIH study section. This system is also shared with review staff from other HHS agencies, to use in the same way. This OMB revision request is for the continued collection of existing data and to update the Prevention Research Expertise Survey (PRES) tool in order to capture areas of expertise not previously collected in the current survey, including additional study design topics, research methods, content topics, and settings in which the respondent's research is performed. The revised PRES also simplifies a question about the respondent's previous NIH review experience and asks researchers who have already completed previous versions of the survey to update their information based on the revised topics.

OMB approval is requested for 3 years. There are no costs to respondents other than their time. The total estimated annualized burden hours are 417.

ESTIMATED ANNUALIZED BURDEN HOURS

Type of respondent	Number of respondents	Number of responses per respondent	Average burden per response (in hours)	Total annual burden hour
New Investigators	600	1	25/60	250
Returning Investigators (to update information)	1,000	1	10/60	167
Total		1,600		417

Dated: October 19, 2020.

Lawrence A. Tabak,

Principal Deputy Director, National Institutes of Health.

[FR Doc. 2020–23587 Filed 10–23–20; 8:45 am]

BILLING CODE 4140–01–P

DEPARTMENT OF HEALTH AND HUMAN SERVICES

National Institutes of Health

National Institute on Aging; Notice of Closed Meetings

Pursuant to section 10(d) of the Federal Advisory Committee Act, as amended, notice is hereby given of the following meetings.

The meetings will be closed to the public in accordance with the provisions set forth in sections 552b(c)(4) and 552b(c)(6), Title 5 U.S.C., as amended. The grant applications and the discussions could disclose confidential trade secrets or commercial property such as patentable material, and personal information concerning individuals associated with the grant applications, the disclosure of which would constitute a clearly unwarranted invasion of personal privacy.

Name of Committee: National Institute on Aging Special Emphasis Panel; Prodromal synucleinopathies—Part 1.

Date: November 3, 2020.

Time: 11:00 a.m. to 5:00 p.m.

Agenda: To review and evaluate grant applications.

Place: National Institute on Aging, Gateway Building, 7201 Wisconsin Avenue, Bethesda, MD 20892 (Virtual Meeting).

Contact Person: Birgit Neuhuber, Ph.D., Scientific Review Officer, Scientific Review Branch, National Institute on Aging, National Institutes of Health, 7201 Wisconsin Avenue, Gateway Building, Suite 2W200, Bethesda, MD 20892, (301) 480–1266, *neuhuber@ninds.nih.gov*.

This notice is being published less than 15 days prior to the meeting due to the timing limitations imposed by the review and funding cycle.

Name of Committee: National Institute on Aging Special Emphasis Panel; Prodromal synucleinopathies—Part 2.

Date: November 9, 2020.

Time: 11:00 a.m. to 5:00 p.m.

Agenda: To review and evaluate grant applications.

Place: National Institute on Aging, Gateway Building, 7201 Wisconsin Avenue, Bethesda, MD 20892 (Virtual Meeting).

Contact Person: Birgit Neuhuber, Ph.D., Scientific Review Officer, Scientific Review Branch, National Institute on Aging, National Institutes of Health, 7201 Wisconsin Avenue, Gateway Building, Suite 2W200, Bethesda, MD 20892, (301) 480–1266, *neuhuber@ninds.nih.gov*.

This notice is being published less than 15 days prior to the meeting due to the timing limitations imposed by the review and funding cycle.

(Catalogue of Federal Domestic Assistance Program Nos. 93.866, Aging Research, National Institutes of Health, HHS)

Dated: October 20, 2020.

Miguelina Perez,

Program Analyst, Office of Federal Advisory Committee Policy.

[FR Doc. 2020–23579 Filed 10–23–20; 8:45 am]

BILLING CODE 4140–01–P

DEPARTMENT OF HOMELAND SECURITY

U.S. Customs and Border Protection

[1651–0058]

Agency Information Collection Activities: Documents Required Aboard Private Aircraft

AGENCY: U.S. Customs and Border Protection (CBP), Department of Homeland Security.

ACTION: 30-Day notice and request for comments; extension of an existing collection of information.

SUMMARY: The Department of Homeland Security, U.S. Customs and Border Protection will be submitting the following information collection request to the Office of Management and Budget (OMB) for review and approval in accordance with the Paperwork Reduction Act of 1995 (PRA). The information collection is published in the **Federal Register** to obtain comments from the public and affected agencies. Comments are encouraged and must be submitted (no later than November 25, 2020) to be assured of consideration.

ADDRESSES: Written comments and recommendations for the proposed information collection should be sent within 30 days of publication of this notice to *www.reginfo.gov/public/do/PRAMain.* Find this particular information collection by selecting ''Currently under 30-day Review—Open for Public Comments'' or by using the search function.

FOR FURTHER INFORMATION CONTACT: Requests for additional PRA information should be directed to Seth Renkema, Chief, Economic Impact Analysis Branch, U.S. Customs and Border Protection, Office of Trade, Regulations and Rulings, 90 K Street NE, 10th Floor, Washington, DC 20229–1177, Telephone number 202–325–0056 or via email *CBP_PRA@cbp.dhs.gov.* Please note that the contact information provided here is solely for questions regarding this notice. Individuals seeking information about other CBP programs should contact the CBP National Customer Service Center at 877–227–5511, (TTY) 1–800–877–8339, or CBP website at *https://www.cbp.gov/.*

SUPPLEMENTARY INFORMATION: CBP invites the general public and other Federal agencies to comment on the proposed and/or continuing information collections pursuant to the Paperwork Reduction Act of 1995 (44 U.S.C. 3501 *et seq.*). This proposed information collection was previously published in the **Federal Register** (85 FR 49390) on August 13, 2020, allowing for a 60-day comment period. This notice allows for an additional 30 days for public comments. This process is conducted in accordance with 5 CFR 1320.8. Written comments and suggestions from the public and affected agencies should address one or more of the following four points: (1) Whether the proposed collection of information is necessary for the proper performance of the functions of the agency, including whether the information will have practical utility; (2) the accuracy of the agency's estimate of the burden of the proposed collection of information, including the validity of the methodology and assumptions used; (3) suggestions to enhance the quality, utility, and clarity of the information to be collected; and (4) suggestions to minimize the burden of the collection of information on those who are to respond, including through the use of appropriate automated, electronic, mechanical, or other technological collection techniques or other forms of information technology, *e.g.,* permitting electronic submission of responses. The comments that are submitted will be summarized and included in the request for approval. All comments will become a matter of public record.

Overview of This Information Collection

Title: Documents Required Aboard Private Aircraft.

OMB Number: 1651–0058.

Form number: None.

Current Actions: CBP proposes to extend the expiration date of this information collection. There is no change to the burden hours or to the information collected.

Type of Review: Extension (without change).

Affected Public: Individuals.

Abstract: In accordance with 19 CFR 122.27(c), a commander of a private aircraft arriving in the U.S. must present several documents to CBP officers for inspection. These documents include: (1) A pilot certificate/license; (2) a medical certificate; and (3) a certificate of registration. CBP officers use the information on these documents as part of the inspection process for private aircraft arriving from a foreign country. This presentation of information is authorized by 19 U.S.C. 1433, as amended by Public Law 99–570.

Estimated Number of Respondents: 120,000.

Estimated Number of Annual Responses per Respondent: 1.

Estimated Number of Total Annual Responses: 120,000.

Estimated Time per Response: 1 minute.

Estimated Total Annual Burden Hours: 1,992.

Dated: October 20, 2020.

Seth D. Renkema,

Branch Chief, Economic Impact Analysis Branch, U.S. Customs and Border Protection.

[FR Doc. 2020–23580 Filed 10–23–20; 8:45 am]

BILLING CODE P

DEPARTMENT OF HOMELAND SECURITY

U.S. Customs and Border Protection

[1651–0021]

Agency Information Collection Activities: Crew Member's Declaration

AGENCY: U.S. Customs and Border Protection (CBP), Department of Homeland Security.

ACTION: 30-Day notice and request for comments; extension of an existing collection of information.

SUMMARY: The Department of Homeland Security, U.S. Customs and Border Protection will be submitting the following information collection request to the Office of Management and Budget (OMB) for review and approval in accordance with the Paperwork Reduction Act of 1995 (PRA). The information collection is published in the **Federal Register** to obtain comments from the public and affected agencies. Comments are encouraged and must be submitted (no later than November 25, 2020) to be assured of consideration.

ADDRESSES: Written comments and recommendations for the proposed information collection should be sent within 30 days of publication of this notice to *www.reginfo.gov/public/do/PRAMain.* Find this particular information collection by selecting ''Currently under 30-day Review—Open for Public Comments'' or by using the search function.

FOR FURTHER INFORMATION CONTACT: Requests for additional PRA information should be directed to Seth Renkema, Chief, Economic Impact Analysis Branch, U.S. Customs and Border Protection, Office of Trade, Regulations and Rulings, 90 K Street NE, 10th Floor, Washington, DC 20229–1177, Telephone number 202–325–0056 or via email *CBP_PRA@cbp.dhs.gov.* Please note that the contact information provided here is solely for questions regarding this notice. Individuals seeking information about other CBP programs should contact the CBP National Customer Service Center at

877–227–5511, (TTY) 1–800–877–8339, or CBP website at *https://www.cbp.gov/.*

SUPPLEMENTARY INFORMATION: CBP invites the general public and other Federal agencies to comment on the proposed and/or continuing information collections pursuant to the Paperwork Reduction Act of 1995 (44 U.S.C. 3501 *et seq.*). This proposed information collection was previously published in the **Federal Register** (85 FR 49389) on August 13, 2020, allowing for a 60-day comment period. This notice allows for an additional 30 days for public comments. This process is conducted in accordance with 5 CFR 1320.8. Written comments and suggestions from the public and affected agencies should address one or more of the following four points: (1) Whether the proposed collection of information is necessary for the proper performance of the functions of the agency, including whether the information will have practical utility; (2) the accuracy of the agency's estimate of the burden of the proposed collection of information, including the validity of the methodology and assumptions used; (3) suggestions to enhance the quality, utility, and clarity of the information to be collected; and (4) suggestions to minimize the burden of the collection of information on those who are to respond, including through the use of appropriate automated, electronic, mechanical, or other technological collection techniques or other forms of information technology, *e.g.,* permitting electronic submission of responses. The comments that are submitted will be summarized and included in the request for approval. All comments will become a matter of public record.

Overview of This Information Collection

Title: Crew Member's Declaration.
OMB Number: 1651–0021.
Form Number: CBP Form 5129.
Current Action: CBP proposes to extend the expiration date of this information collection with no change to the burden hours or to CBP Form 5129.
Type of Review: Extension (without change).
Affected Public: Businesses.
Abstract: CBP Form 5129, *Crew Member's Declaration,* is a declaration made by crew members listing all goods acquired abroad which are in his/her possession at the time of arrival in the United States. The data collected on CBP Form 5129 is used for compliance with currency reporting requirements, supplemental immigration documentation, agricultural quarantine matters, and the importation of merchandise by crew members who complete the individual declaration. This form is authorized by 19 U.S.C. 1431 and provided for by 19 CFR 4.7, 4.81, 122.83, 122.84, and 148.61–148.67. CBP Form 5129 is accessible at *https://www.cbp.gov/sites/default/files/assets/documents/2018-Dec/CBP%20Form%205129.pdf.*
Estimated Number of Respondents: 6,000,000.
Estimated Number of Annual Responses per Respondent: 1.
Estimated Number of Total Annual Responses: 6,000,000.
Estimated Time per Response: 10 minutes.
Estimated Total Annual Burden Hours: 996,000.

Dated: October 20, 2020.

Seth D. Renkema,

Branch Chief, Economic Impact Analysis Branch, U.S. Customs and Border Protection.

[FR Doc. 2020–23581 Filed 10–23–20; 8:45 am]

BILLING CODE P

DEPARTMENT OF HOMELAND SECURITY

Federal Emergency Management Agency

[Internal Agency Docket No. FEMA–3544–EM; Docket ID FEMA–2020–0001]

Mississippi; Amendment No. 1 to Notice of an Emergency Declaration

AGENCY: Federal Emergency Management Agency, DHS.

ACTION: Notice.

SUMMARY: This notice amends the notice of an emergency declaration for the State of Mississippi (FEMA–3544–EM), dated September 14, 2020, and related determinations.

DATES: This amendment was issued September 30, 2020.

FOR FURTHER INFORMATION CONTACT: Dean Webster, Office of Response and Recovery, Federal Emergency Management Agency, 500 C Street SW, Washington, DC 20472, (202) 646–2833.

SUPPLEMENTARY INFORMATION: Notice is hereby given that the incident period for this emergency is closed effective September 17, 2020.

The following Catalog of Federal Domestic Assistance Numbers (CFDA) are to be used for reporting and drawing funds: 97.030, Community Disaster Loans; 97.031, Cora Brown Fund; 97.032, Crisis Counseling; 97.033, Disaster Legal Services; 97.034, Disaster Unemployment Assistance (DUA); 97.046, Fire Management Assistance Grant; 97.048, Disaster Housing Assistance to Individuals and Households In Presidentially Declared Disaster Areas; 97.049, Presidentially Declared Disaster Assistance—Disaster Housing Operations for Individuals and Households; 97.050, Presidentially Declared Disaster Assistance to Individuals and Households—Other Needs; 97.036, Disaster Grants—Public Assistance (Presidentially Declared Disasters); 97.039, Hazard Mitigation Grant.

Pete Gaynor,

Administrator, Federal Emergency Management Agency.

[FR Doc. 2020–23598 Filed 10–23–20; 8:45 am]

BILLING CODE 9111–23–P

DEPARTMENT OF HOMELAND SECURITY

Federal Emergency Management Agency

[Internal Agency Docket No. FEMA–4564–DR; Docket ID FEMA–2020–0001]

Florida; Major Disaster and Related Determinations

AGENCY: Federal Emergency Management Agency, DHS.

ACTION: Notice.

SUMMARY: This is a notice of the Presidential declaration of a major disaster for the State of Florida (FEMA–4564–DR), dated September 23, 2020, and related determinations.

DATES: The declaration was issued September 23, 2020.

FOR FURTHER INFORMATION CONTACT: Dean Webster, Office of Response and Recovery, Federal Emergency Management Agency, 500 C Street SW, Washington, DC 20472, (202) 646–2833.

SUPPLEMENTARY INFORMATION: Notice is hereby given that, in a letter dated September 23, 2020, the President issued a major disaster declaration under the authority of the Robert T. Stafford Disaster Relief and Emergency Assistance Act, 42 U.S.C. 5121 *et seq.* (the ''Stafford Act''), as follows:

I have determined that the damage in certain areas of the State of Florida resulting from Hurricane Sally beginning on September 14, 2020, continuing, is of sufficient severity and magnitude to warrant a major disaster declaration under the Robert T. Stafford Disaster Relief and Emergency Assistance Act, 42 U.S.C. 5121 *et seq.* (the ''Stafford Act''). Therefore, I declare that such a major disaster exists in the State of Florida.

In order to provide Federal assistance, you are hereby authorized to allocate from funds available for these purposes such amounts as you find necessary for Federal disaster assistance and administrative expenses.

You are authorized to provide Public Assistance and assistance for emergency protective measures (Category B), including direct Federal assistance, under the Public

Assistance program in the designated areas, Hazard Mitigation throughout the State; and any other forms of assistance under the Stafford Act that you deem appropriate subject to completion of Preliminary Damage Assessments (PDAs).

Consistent with the requirement that Federal assistance is supplemental, any Federal funds provided under the Stafford Act for Public Assistance, Hazard Mitigation, and Other Needs Assistance under section 408 will be limited to 75 percent of the total eligible costs.

Further, you are authorized to make changes to this declaration for the approved assistance to the extent allowable under the Stafford Act.

The Federal Emergency Management Agency (FEMA) hereby gives notice that pursuant to the authority vested in the Administrator, under Executive Order 12148, as amended, Jeffrey L. Coleman, of FEMA is appointed to act as the Federal Coordinating Officer for this major disaster.

The following areas of the State of Florida have been designated as adversely affected by this major disaster:

Escambia County for Public Assistance, including direct Federal assistance.

Emergency protective measures (Category B), including direct Federal assistance, under the Public Assistance program for Bay, Calhoun, Franklin, Gadsden, Gulf, Holmes, Jackson, Liberty, Okaloosa, Santa Rosa, Walton, and Washington Counties.

All areas within the State of Florida are eligible for assistance under the Hazard Mitigation Grant Program.

The following Catalog of Federal Domestic Assistance Numbers (CFDA) are to be used for reporting and drawing funds: 97.030, Community Disaster Loans; 97.031, Cora Brown Fund; 97.032, Crisis Counseling; 97.033, Disaster Legal Services; 97.034, Disaster Unemployment Assistance (DUA); 97.046, Fire Management Assistance Grant; 97.048, Disaster Housing Assistance to Individuals and Households In Presidentially Declared Disaster Areas; 97.049, Presidentially Declared Disaster Assistance—Disaster Housing Operations for Individuals and Households; 97.050, Presidentially Declared Disaster Assistance to Individuals and Households—Other Needs; 97.036, Disaster Grants—Public Assistance (Presidentially Declared Disasters); 97.039, Hazard Mitigation Grant.

Pete Gaynor,

Administrator, Federal Emergency Management Agency.

[FR Doc. 2020–23611 Filed 10–23–20; 8:45 am]

BILLING CODE 9111–23–P

DEPARTMENT OF HOMELAND SECURITY

Federal Emergency Management Agency

[Internal Agency Docket No. FEMA–4557–DR; Docket ID FEMA–2020–0001]

Iowa; Amendment No. 4 to Notice of a Major Disaster Declaration

AGENCY: Federal Emergency Management Agency, DHS.

ACTION: Notice.

SUMMARY: This notice amends the notice of a major disaster declaration for the State of Iowa (FEMA–4557–DR), dated August 17, 2020, and related determinations.

DATES: This amendment was issued October 5, 2020.

FOR FURTHER INFORMATION CONTACT: Dean Webster, Office of Response and Recovery, Federal Emergency Management Agency, 500 C Street SW, Washington, DC 20472, (202) 646–2833.

SUPPLEMENTARY INFORMATION: The notice of a major disaster declaration for the State of Iowa is hereby amended to include the following area among those areas determined to have been adversely affected by the event declared a major disaster by the President in his declaration of August 17, 2020.

Clinton County for Individual Assistance (already designated for Public Assistance).

The following Catalog of Federal Domestic Assistance Numbers (CFDA) are to be used for reporting and drawing funds: 97.030, Community Disaster Loans; 97.031, Cora Brown Fund; 97.032, Crisis Counseling; 97.033, Disaster Legal Services; 97.034, Disaster Unemployment Assistance (DUA); 97.046, Fire Management Assistance Grant; 97.048, Disaster Housing Assistance to Individuals and Households In Presidentially Declared Disaster Areas; 97.049, Presidentially Declared Disaster Assistance—Disaster Housing Operations for Individuals and Households; 97.050 Presidentially Declared Disaster Assistance to Individuals and Households—Other Needs; 97.036, Disaster Grants—Public Assistance (Presidentially Declared Disasters); 97.039, Hazard Mitigation Grant.

Pete Gaynor,

Administrator, Federal Emergency Management Agency.

[FR Doc. 2020–23602 Filed 10–23–20; 8:45 am]

BILLING CODE 9111–23–P

DEPARTMENT OF HOMELAND SECURITY

Federal Emergency Management Agency

[Internal Agency Docket No. FEMA–3542–EM; Docket ID FEMA–2020–0001]

Oregon; Emergency and Related Determinations

AGENCY: Federal Emergency Management Agency, DHS.

ACTION: Notice.

SUMMARY: This is a notice of the Presidential declaration of an emergency for the State of Oregon (FEMA–3542–EM), dated September 10, 2020, and related determinations.

DATES: The declaration was issued September 10, 2020.

FOR FURTHER INFORMATION CONTACT: Dean Webster, Office of Response and Recovery, Federal Emergency Management Agency, 500 C Street SW, Washington, DC 20472, (202) 646–2833.

SUPPLEMENTARY INFORMATION: Notice is hereby given that, in a letter dated September 10, 2020, the President issued an emergency declaration under the authority of the Robert T. Stafford Disaster Relief and Emergency Assistance Act, 42 U.S.C. 5121–5207 (the Stafford Act), as follows:

I have determined that the emergency conditions in certain areas of the State of Oregon resulting from wildfires beginning on September 8, 2020, and continuing, are of sufficient severity and magnitude to warrant an emergency declaration under the Robert T. Stafford Disaster Relief and Emergency Assistance Act, 42 U.S.C. 5121 *et seq.* (''the Stafford Act''). Therefore, I declare that such an emergency exists in the State of Oregon.

You are authorized to provide appropriate assistance for required emergency measures, authorized under title V of the Stafford Act, to save lives and to protect property and public health and safety, and to lessen or avert the threat of a catastrophe in the designated areas. Specifically, you are authorized to provide emergency protective measures (Category B), including direct Federal assistance, under the Public Assistance program in the designated areas.

Consistent with the requirement that Federal assistance be supplemental, any Federal funds provided under the Stafford Act for Public Assistance will be limited to 75 percent of the total eligible costs. In order to provide Federal assistance, you are hereby authorized to allocate from funds available for these purposes such amounts as you find necessary for Federal emergency assistance and administrative expenses.

Further, you are authorized to make changes to this declaration for the approved assistance to the extent allowable under the Stafford Act.

The Federal Emergency Management Agency (FEMA) hereby gives notice that

pursuant to the authority vested in the Administrator, Department of Homeland Security, under Executive Order 12148, as amended, Dolph A. Diemont, of FEMA is appointed to act as the Federal Coordinating Officer for this declared emergency.

The following areas of the State of Oregon have been designated as adversely affected by this declared emergency:

Clackamas, Douglas, Jackson, Jefferson, Klamath, Lane, Lincoln, Linn, Marion, Tillamook, and Washington Counties for emergency protective measures (Category B), including direct Federal assistance, under the Public Assistance program.

The following Catalog of Federal Domestic Assistance Numbers (CFDA) are to be used for reporting and drawing funds: 97.030, Community Disaster Loans; 97.031, Cora Brown Fund; 97.032, Crisis Counseling; 97.033, Disaster Legal Services; 97.034, Disaster Unemployment Assistance (DUA); 97.046, Fire Management Assistance Grant; 97.048, Disaster Housing Assistance to Individuals and Households In Presidentially Declared Disaster Areas; 97.049, Presidentially Declared Disaster Assistance—Disaster Housing Operations for Individuals and Households; 97.050, Presidentially Declared Disaster Assistance to Individuals and Households—Other Needs; 97.036, Disaster Grants—Public Assistance (Presidentially Declared Disasters); 97.039, Hazard Mitigation Grant.

Pete Gaynor,

Administrator, Federal Emergency Management Agency.

[FR Doc. 2020–23595 Filed 10–23–20; 8:45 am]

BILLING CODE 9111–23–P

DEPARTMENT OF HOMELAND SECURITY

Federal Emergency Management Agency

[Internal Agency Docket No. FEMA–4562–DR; Docket ID FEMA–2020–0001]

Oregon; Amendment No. 1 to Notice of a Major Disaster Declaration

AGENCY: Federal Emergency Management Agency, DHS.

ACTION: Notice.

SUMMARY: This notice amends the notice of a major disaster declaration for the State of Oregon (FEMA–4562–DR), dated September 15, 2020, and related determinations.

DATES: This amendment was issued October 5, 2020.

FOR FURTHER INFORMATION CONTACT: Dean Webster, Office of Response and Recovery, Federal Emergency Management Agency, 500 C Street SW, Washington, DC 20472, (202) 646–2833.

SUPPLEMENTARY INFORMATION: The notice of a major disaster declaration for the State of Oregon is hereby amended to include debris removal for the following areas among those areas determined to have been adversely affected by the event declared a major disaster by the President in his declaration of September 15, 2020.

Clackamas, Douglas, Jackson, Klamath, Lane, Lincoln, Linn, and Marion Counties for debris removal [Category A] (already designated for Individual Assistance and assistance for emergency protective measures [Category B], including direct federal assistance, under the Public Assistance program).

The following Catalog of Federal Domestic Assistance Numbers (CFDA) are to be used for reporting and drawing funds: 97.030, Community Disaster Loans; 97.031, Cora Brown Fund; 97.032, Crisis Counseling; 97.033, Disaster Legal Services; 97.034, Disaster Unemployment Assistance (DUA); 97.046, Fire Management Assistance Grant; 97.048, Disaster Housing Assistance to Individuals and Households In Presidentially Declared Disaster Areas; 97.049, Presidentially Declared Disaster Assistance—Disaster Housing Operations for Individuals and Households; 97.050 Presidentially Declared Disaster Assistance to Individuals and Households—Other Needs; 97.036, Disaster Grants—Public Assistance (Presidentially Declared Disasters); 97.039, Hazard Mitigation Grant.

Pete Gaynor,

Administrator, Federal Emergency Management Agency.

[FR Doc. 2020–23606 Filed 10–23–20; 8:45 am]

BILLING CODE 9111–23–P

DEPARTMENT OF HOMELAND SECURITY

Federal Emergency Management Agency

[Internal Agency Docket No. FEMA–4558–DR; Docket ID FEMA–2020–0001]

California; Amendment No. 5 to Notice of a Major Disaster Declaration

AGENCY: Federal Emergency Management Agency, DHS.

ACTION: Notice.

SUMMARY: This notice amends the notice of a major disaster declaration for the State of California (FEMA–4558–DR), dated August 22, 2020, and related determinations.

DATES: This amendment was issued September 28, 2020.

FOR FURTHER INFORMATION CONTACT: Dean Webster, Office of Response and Recovery, Federal Emergency Management Agency, 500 C Street SW, Washington, DC 20472, (202) 646–2833.

SUPPLEMENTARY INFORMATION: The notice of a major disaster declaration for the State of California is hereby amended to include the following areas among those areas determined to have been adversely affected by the event declared a major disaster by the President in his declaration of August 22, 2020.

Santa Clara County for Individual Assistance.

Nevada and Santa Clara Counties for Public Assistance, including direct federal assistance.

The following Catalog of Federal Domestic Assistance Numbers (CFDA) are to be used for reporting and drawing funds: 97.030, Community Disaster Loans; 97.031, Cora Brown Fund; 97.032, Crisis Counseling; 97.033, Disaster Legal Services; 97.034, Disaster Unemployment Assistance (DUA); 97.046, Fire Management Assistance Grant; 97.048, Disaster Housing Assistance to Individuals and Households In Presidentially Declared Disaster Areas; 97.049, Presidentially Declared Disaster Assistance—Disaster Housing Operations for Individuals and Households; 97.050 Presidentially Declared Disaster Assistance to Individuals and Households—Other Needs; 97.036, Disaster Grants—Public Assistance (Presidentially Declared Disasters); 97.039, Hazard Mitigation Grant.

Pete Gaynor,

Administrator, Federal Emergency Management Agency.

[FR Doc. 2020–23603 Filed 10–23–20; 8:45 am]

BILLING CODE 9111–23–P

DEPARTMENT OF HOMELAND SECURITY

Federal Emergency Management Agency

[Internal Agency Docket No. FEMA–4558–DR; Docket ID FEMA–2020–0001]

California; Amendment No. 6 to Notice of a Major Disaster Declaration

AGENCY: Federal Emergency Management Agency, DHS.

ACTION: Notice.

SUMMARY: This notice amends the notice of a major disaster declaration for the State of California (FEMA–4558–DR), dated August 22, 2020, and related determinations.

DATES: This amendment was issued September 30, 2020.

FOR FURTHER INFORMATION CONTACT: Dean Webster, Office of Response and Recovery, Federal Emergency Management Agency, 500 C Street SW, Washington, DC 20472, (202) 646–2833.

SUPPLEMENTARY INFORMATION: The notice is hereby given that the incident period for this major disaster is closed effective September 26, 2020, with the exception

of additional damage resulting from the North Complex Fire.

The following Catalog of Federal Domestic Assistance Numbers (CFDA) are to be used for reporting and drawing funds: 97.030, Community Disaster Loans; 97.031, Cora Brown Fund; 97.032, Crisis Counseling; 97.033, Disaster Legal Services; 97.034, Disaster Unemployment Assistance (DUA); 97.046, Fire Management Assistance Grant; 97.048, Disaster Housing Assistance to Individuals and Households In Presidentially Declared Disaster Areas; 97.049, Presidentially Declared Disaster Assistance—Disaster Housing Operations for Individuals and Households; 97.050 Presidentially Declared Disaster Assistance to Individuals and Households—Other Needs; 97.036, Disaster Grants—Public Assistance (Presidentially Declared Disasters); 97.039, Hazard Mitigation Grant.

Pete Gaynor,

Administrator, Federal Emergency Management Agency.

[FR Doc. 2020–23604 Filed 10–23–20; 8:45 am]

BILLING CODE 9111–23–P

DEPARTMENT OF HOMELAND SECURITY

Federal Emergency Management Agency

[Docket ID FEMA–2020–0002]

Changes in Flood Hazard Determinations

AGENCY: Federal Emergency Management Agency, DHS.

ACTION: Notice.

SUMMARY: New or modified Base (1-percent annual chance) Flood Elevations (BFEs), base flood depths, Special Flood Hazard Area (SFHA) boundaries or zone designations, and/or regulatory floodways (hereinafter referred to as flood hazard determinations) as shown on the indicated Letter of Map Revision (LOMR) for each of the communities listed in the table below are finalized. Each LOMR revises the Flood Insurance Rate Maps (FIRMs), and in some cases the Flood Insurance Study (FIS) reports, currently in effect for the listed communities. The flood hazard determinations modified by each LOMR will be used to calculate flood insurance premium rates for new buildings and their contents.

DATES: Each LOMR was finalized as in the table below.

ADDRESSES: Each LOMR is available for inspection at both the respective Community Map Repository address listed in the table below and online through the FEMA Map Service Center at *https://msc.fema.gov.*

FOR FURTHER INFORMATION CONTACT: Rick Sacbibit, Chief, Engineering Services Branch, Federal Insurance and Mitigation Administration, FEMA, 400 C Street SW, Washington, DC 20472, (202) 646–7659, or (email) *patrick.sacbibit@fema.dhs.gov;* or visit the FEMA Mapping and Information eXchange (FMIX) online at *https://www.floodmaps.fema.gov/fhm/fmx_main.html.*

SUPPLEMENTARY INFORMATION: The Federal Emergency Management Agency (FEMA) makes the final flood hazard determinations as shown in the LOMRs for each community listed in the table below. Notice of these modified flood hazard determinations has been published in newspapers of local circulation and 90 days have elapsed since that publication. The Deputy Associate Administrator for Insurance and Mitigation has resolved any appeals resulting from this notification.

The modified flood hazard determinations are made pursuant to section 206 of the Flood Disaster Protection Act of 1973, 42 U.S.C. 4105, and are in accordance with the National Flood Insurance Act of 1968, 42 U.S.C. 4001 *et seq.,* and with 44 CFR part 65.

For rating purposes, the currently effective community number is shown and must be used for all new policies and renewals.

The new or modified flood hazard information is the basis for the floodplain management measures that the community is required either to adopt or to show evidence of being already in effect in order to remain qualified for participation in the National Flood Insurance Program (NFIP).

This new or modified flood hazard information, together with the floodplain management criteria required by 44 CFR 60.3, are the minimum that are required. They should not be construed to mean that the community must change any existing ordinances that are more stringent in their floodplain management requirements. The community may at any time enact stricter requirements of its own or pursuant to policies established by other Federal, State, or regional entities.

This new or modified flood hazard determinations are used to meet the floodplain management requirements of the NFIP and are used to calculate the appropriate flood insurance premium rates for new buildings, and for the contents in those buildings. The changes in flood hazard determinations are in accordance with 44 CFR 65.4.

Interested lessees and owners of real property are encouraged to review the final flood hazard information available at the address cited below for each community or online through the FEMA Map Service Center at *https://msc.fema.gov.*

(Catalog of Federal Domestic Assistance No. 97.022, ''Flood Insurance.'')

Michael M. Grimm,

Assistant Administrator for Risk Management, Department of Homeland Security, Federal Emergency Management Agency.

State and county	Location and case No.	Chief executive officer of community	Community map repository	Date of modification	Community No.
Colorado:					
Boulder (FEMA Docket No.: B–2040).	City of Longmont (19–08–1079P).	The Honorable Brian Bagley, Mayor, City of Longmont, 350 Kimbark Street, Longmont, CO 80501.	Public Works and Natural Resources Department, 350 Kimbark Street, Longmont, CO 80501.	Sep. 17, 2020	080027
Boulder (FEMA Docket No.: B–2040).	Unincorporated areas of Boulder County (19–08–1079P).	The Honorable Deb Gardner, Chair, Boulder County Board of Commissioners, P.O. Box 471, Boulder, CO 80306.	Boulder County Transportation Department, 2525 13th Street, Suite 203, Boulder, CO 80304.	Sep. 17, 2020	080023
Broomfield (FEMA Docket No.: B–2040).	City and County of Broomfield (19–08–0374P).	The Honorable Patrick Quinn, Mayor, City and County of Broomfield, 1 DesCombes Drive, Broomfield, CO 80020.	Engineering Department, 1 DesCombes Drive, Broomfield, CO 80020.	Sep. 25, 2020	085073
Jefferson (FEMA Docket No.: B–2040).	City of Westminster (19–08–0374P).	The Honorable Herb Atchison, Mayor, City of Westminster, 4880 West 92nd Avenue, Westminster, CO 80031.	City Hall, 4880 West 92nd Avenue, Westminster, CO 80031.	Sep. 25, 2020	080008
Connecticut:					

State and county	Location and case No.	Chief executive officer of community	Community map repository	Date of modification	Community No.
New Haven (FEMA Docket No.: B–2042).	Town of Guilford (20–01–0537P).	The Honorable Matthew T. Hoey, III, First Selectman, Town of Guilford Board of Selectmen, 31 Park Street, Guilford, CT 06437.	Engineering Department, 50 Boston Street, Guilford, CT 06437.	Sep. 18, 2020	090077
New Haven (FEMA Docket No.: B–2042).	Town of Guilford (20–01–0575P).	The Honorable Matthew T. Hoey, III, First Selectman, Town of Guilford Board of Selectmen, 31 Park Street, Guilford, CT 06437.	Engineering Department, 50 Boston Street, Guilford, CT 06437.	Sep. 25, 2020	090077
Florida:					
Clay (FEMA Docket No.: B–2043).	Unincorporated areas of Clay County (20–04–0028P).	The Honorable Gayward Hendry, Chairman, Clay County Board of Commissioners, P.O. Box 1366, Green Cove Springs, FL 32043.	Clay County Development Services Department, 477 Houston Street, Green Cove Springs, FL 32043.	Sep. 25, 2020	120064
Collier (FEMA Docket No.: B–2042).	City of Naples (20–04–1989P).	The Honorable Teresa L. Heitmann, Mayor, City of Naples, 735 8th Street South, Naples, FL 34102.	Building Department, 295 Riverside Circle, Naples, FL 34102.	Sep. 22, 2020	125130
Collier (FEMA Docket No.: B–2043).	Unincorporated areas of Collier County (20–04–1400P).	Mr. Burt L. Saunders, Chairman, Collier County Board of Commissioners, 3299 Tamiami Trail East, Suite 303, Naples, FL 34112.	Collier County Growth Management Department, 2800 North Horseshoe Drive, Naples, FL 34104.	Sep. 25, 2020	120067
Lee (FEMA Docket No.: B–2043).	City of Sanibel (19–04–6092P).	The Honorable Kevin Ruane, Mayor, City of Sanibel, 800 Dunlop Road, Sanibel, FL 33957.	Community Services Department, 800 Dunlop Road, Sanibel, FL 33957.	Sep. 25, 2020	120402
Miami-Dade (FEMA Docket No.: B–2040).	City of Miami (20–04–1579P).	The Honorable Francis X. Suarez, Mayor, City of Miami, 3500 Pan American Drive, Miami, FL 33130.	Building Department, 444 Southwest 2nd Street, 4th Floor, Miami, FL 33130.	Sep. 24, 2020	120650
Monroe (FEMA Docket No.: B–2043).	Unincorporated areas of Monroe County (20–04–2043P).	The Honorable Heather Carruthers, Mayor, Monroe County Board of Commissioners, 500 Whitehead Street, Suite 102, Key West, FL 33040.	Monroe County Building Department, 2798 Overseas Highway, Suite 300, Marathon, FL 33050.	Sep. 21, 2020	125129
Osceola (FEMA Docket No.: B–2043).	Unincorporated areas of Osceola County (19–04–6034P).	The Honorable Viviana Janer, Chair, Osceola County Board of Commissioners, 1 Courthouse Square, Suite 4700, Kissimmee, FL 34741.	Osceola County Stormwater Department, 1 Courthouse Square, Suite 3100, Kissimmee, FL 34741.	Sep. 25, 2020	120189
Pasco (FEMA Docket No.: B–2040).	Unincorporated areas of Pasco County (19–04–4754P).	Mr. Dan Biles, Pasco County Administrator, 8731 Citizens Drive, New Port Richey, FL 34654.	Pasco County Administration Building, 8731 Citizens Drive, New Port Richey, FL 34654.	Sep. 17, 2020	120230
Sarasota (FEMA Docket No.: B–2040).	City of Sarasota (20–04–2087P).	The Honorable Jennifer Ahearn-Koch, Mayor, City of Sarasota, 1565 1st Street, Room 101, Sarasota, FL 34236.	Development Services Department, 1565 1st Street, Sarasota, FL 34236.	Sep. 24, 2020	125150
Sarasota (FEMA Docket No.: B–2040).	Unincorporated areas of Sarasota (20–04–1981P).	The Honorable Charles D. Hines, Chairman, Sarasota County Board of Commissioners, 1660 Ringling Boulevard, Sarasota, FL 34236.	Sarasota County Planning and Development Services Department, 1001 Sarasota Center Boulevard, Sarasota, FL 34240.	Sep. 21, 2020	125144
Sarasota (FEMA Docket No.: B–2040).	Unincorporated areas of Sarasota (20–04–1982P).	The Honorable Charles D. Hines, Chairman, Sarasota County Board of Commissioners, 1660 Ringling Boulevard, Sarasota, FL 34236.	Sarasota County Planning and Development Services Department, 1001 Sarasota Center Boulevard, Sarasota, FL 34240.	Sep. 21, 2020	125144
Sumter (FEMA Docket No.: B–2040).	Unincorporated areas of Sumter County (20–04–1391P).	The Honorable Steve Printz, Chairman, Sumter County Board of Commissioners, 7375 Powell Road, Wildwood, FL 34785.	Sumter County Development Department, 7375 Powell Road, Wildwood, FL 34785.	Sep. 25, 2020	120296
Georgia: Richmond (FEMA Docket No.: B–2040).	City of Augusta (19–04–6591P).	The Honorable Hardie Davis, Jr., Mayor, City of Augusta, 535 Telfair Street, Suite 200, Augusta, GA 30901.	Planning and Development Department, 535 Telfair Street, Suite 300, Augusta, GA 30901.	Sep. 25, 2020	130158
Kentucky: Christian (FEMA Docket No.: B–2042).	City of Hopkinsville (19–04–5960P).	The Honorable Wendell Lynch, Mayor, City of Hopkinsville, 715 South Virginia Street, Hopkinsville, KY 42240.	Community and Development Services Department, 710 South Virginia Street, Hopkinsville, KY 42240.	Sep. 18, 2020	210055
Maine: Lincoln (FEMA Docket No.: B–2042).	Town of Boothbay Harbor (20–01–0236P).	Ms. Julia Latter, Manager, Town of Boothbay Harbor, 11 Howard Street, Boothbay Harbor, ME 04538.	Code Enforcement Department, 11 Howard Street, Boothbay Harbor, ME 04538.	Sep. 25, 2020	230213
Massachusetts: Essex (FEMA Docket No.: B–2043).	Town of Rockport (20–01–0536P).	The Honorable Paul F. Murphy, Chairman, Town of Rockport Board of Selectmen, 34 Broadway, Rockport, MA 01966.	Department of Inspection Services, 34 Broadway, Rockport, MA 01966.	Sep. 17, 2020	250100
New Mexico:					
Bernalillo (FEMA Docket No.: B–2040).	City of Albuquerque (19–06–3069P).	The Honorable Timothy M. Keller, Mayor, City of Albuquerque, P.O. Box 1293, Albuquerque, NM 87103.	Development Review Services Division, 600 2nd Street Northwest, Suite 201, Albuquerque, NM 87102.	Sep. 21, 2020	350002
Bernalillo (FEMA Docket No.: B–2040).	Unincorporated areas of Bernalillo County (19–06–3069P).	Ms. Julie Morgas Baca, Bernalillo County Manager, 1 Civic Plaza Northwest, 10th Floor, Albuquerque, NM 87102.	Bernalillo County Public Works Division, 2400 Broadway Boulevard Southeast, Albuquerque, NM 87102.	Sep. 21, 2020	350001
Pennsylvania:					
Lackawanna (FEMA Docket No.: B–2023).	Borough of Jermyn (20–03–0330P).	The Honorable Frank Kulick, President, Borough of Jermyn Council, 440 Jefferson Avenue, Jermyn, PA 18433.	Borough Hall, 440 Jefferson Avenue, Jermyn, PA 18433.	Aug. 6, 2020	420530

State and county	Location and case No.	Chief executive officer of community	Community map repository	Date of modification	Community No.
Lackawanna (FEMA Docket No.: B–2023).	Borough of Mayfield (20–03–0330P).	The Honorable Alexander J. Chelik, Mayor, Borough of Mayfield, 739 Penn Avenue, Mayfield, PA 18433.	Borough Hall, 739 Penn Avenue, Mayfield, PA 18433.	Aug. 6, 2020	420532
Lackawanna (FEMA Docket No.: B–2023).	Township of Carbondale (20–03–0330P).	The Honorable Paul Figliomeni, Chairman, Township of Carbondale Board of Supervisors, 103 School Street, Childs, PA 18407.	Township Hall, 103 School Street, Childs, PA 18407.	Aug. 6, 2020	421750
Texas:					
Bastrop (FEMA Docket No.: B–2040).	City of Bastrop (20–06–1063P).	The Honorable Connie Schroeder, Mayor, City of Bastrop, P.O. Box 427, Bastrop, TX 78602.	City Hall, 1311 Chestnut Street, Bastrop, TX 78602.	Sep. 21, 2020	480022
Bastrop (FEMA Docket No.: B–2040).	Unincorporated areas of Bastrop County (20–06–1063P).	The Honorable Paul Pape, Bastrop County Judge, 804 Pecan Street, Bastrop, TX 78602.	Bastrop County Engineering and Development Department, 211 Jackson Street, Bastrop, TX 78602.	Sep. 21, 2020	481193
Denton (FEMA Docket No.: B–2040).	City of The Colony (19–06–3392P).	Mr. Troy Powell, Manager, City of The Colony, 6800 Main Street, The Colony, TX 75056.	Engineering Department, 6800 Main Street, The Colony, TX 75056.	Sep. 21, 2020	481581
Ellis (FEMA Docket No.: B–2040).	City of Red Oak (20–06–0057P).	Mr. Todd Fuller, Manager, City of Red Oak, 200 Lakeview Parkway, Red Oak, TX 75154.	Engineering and Community Development Department, 411 West Red Oak Road, Red Oak, TX 75154.	Sep. 24, 2020	481650
Ellis (FEMA Docket No.: B–2040).	Unincorporated areas of Ellis County (20–06–0057P).	The Honorable Todd Little, Ellis County Judge, 101 West Main Street, Waxahachie, TX 75165.	Ellis County Engineering Department, 109 South Jackson Street, Waxahachie, TX 75165.	Sep. 24, 2020	480798
Harris (FEMA Docket No.: B–2040).	Unincorporated areas of Harris County (19–06–1346P).	The Honorable Lina Hidalgo, Harris County Judge, 1001 Preston Street, Suite 911, Houston, TX 77002.	Harris County Permit Department, 10555 Northwest Freeway, Suite 120, Houston, TX 77092.	Sep. 21, 2020	480287
Tarrant (FEMA Docket No.: B–2040).	City of Arlington (19–06–3156P).	The Honorable Jeff Williams, Mayor, City of Arlington, P.O. Box 90231, Arlington, TX 76004.	City Hall, 101 West Abram Street, Arlington, TX 76010.	Sep. 17, 2020	485454
Tarrant (FEMA Docket No.: B–2040).	City of Euless (20–06–0048P).	The Honorable Linda Martin, Mayor, City of Euless, 201 North Ector Drive, Euless, TX 76039.	Planning and Engineering Department, 201 North Ector Drive, Euless, TX 76039.	Sep. 24, 2020	480593

[FR Doc. 2020–23614 Filed 10–23–20; 8:45 am]

BILLING CODE 9110–12–P

DEPARTMENT OF HOMELAND SECURITY

Federal Emergency Management Agency

[Docket ID FEMA–2020–0002; Internal Agency Docket No. FEMA–B–2058]

Proposed Flood Hazard Determinations

AGENCY: Federal Emergency Management Agency, DHS.

ACTION: Notice.

SUMMARY: Comments are requested on proposed flood hazard determinations, which may include additions or modifications of any Base Flood Elevation (BFE), base flood depth, Special Flood Hazard Area (SFHA) boundary or zone designation, or regulatory floodway on the Flood Insurance Rate Maps (FIRMs), and where applicable, in the supporting Flood Insurance Study (FIS) reports for the communities listed in the table below. The purpose of this notice is to seek general information and comment regarding the preliminary FIRM, and where applicable, the FIS report that the Federal Emergency Management Agency (FEMA) has provided to the affected communities. The FIRM and FIS report are the basis of the floodplain management measures that the community is required either to adopt or to show evidence of having in effect in order to qualify or remain qualified for participation in the National Flood Insurance Program (NFIP). In addition, the FIRM and FIS report, once effective, will be used by insurance agents and others to calculate appropriate flood insurance premium rates for new buildings and the contents of those buildings.

DATES: Comments are to be submitted on or before January 25, 2021.

ADDRESSES: The Preliminary FIRM, and where applicable, the FIS report for each community are available for inspection at both the online location *https://www.fema.gov/preliminary floodhazarddata* and the respective Community Map Repository address listed in the tables below. Additionally, the current effective FIRM and FIS report for each community are accessible online through the FEMA Map Service Center at *https://msc.fema.gov* for comparison.

You may submit comments, identified by Docket No. FEMA–B–2058, to Rick Sacbibit, Chief, Engineering Services Branch, Federal Insurance and Mitigation Administration, FEMA, 400 C Street SW, Washington, DC 20472, (202) 646–7659, or (email) *patrick.sacbibit@fema.dhs.gov.*

FOR FURTHER INFORMATION CONTACT: Rick Sacbibit, Chief, Engineering Services Branch, Federal Insurance and Mitigation Administration, FEMA, 400 C Street SW, Washington, DC 20472, (202) 646–7659, or (email) *patrick.sacbibit@fema.dhs.gov;* or visit the FEMA Mapping and Insurance eXchange (FMIX) online at *https://www.floodmaps.fema.gov/fhm/fmx_main.html.*

SUPPLEMENTARY INFORMATION: FEMA proposes to make flood hazard determinations for each community listed below, in accordance with section 110 of the Flood Disaster Protection Act of 1973, 42 U.S.C. 4104, and 44 CFR 67.4(a).

These proposed flood hazard determinations, together with the floodplain management criteria required by 44 CFR 60.3, are the minimum that are required. They should not be construed to mean that the community must change any existing ordinances that are more stringent in their floodplain management requirements. The community may at any time enact stricter requirements of its own or

pursuant to policies established by other Federal, State, or regional entities. These flood hazard determinations are used to meet the floodplain management requirements of the NFIP and are used to calculate the appropriate flood insurance premium rates for new buildings built after the FIRM and FIS report become effective.

The communities affected by the flood hazard determinations are provided in the tables below. Any request for reconsideration of the revised flood hazard information shown on the Preliminary FIRM and FIS report that satisfies the data requirements outlined in 44 CFR 67.6(b) is considered an appeal. Comments unrelated to the flood hazard determinations also will be considered before the FIRM and FIS report become effective.

Use of a Scientific Resolution Panel (SRP) is available to communities in support of the appeal resolution process. SRPs are independent panels of experts in hydrology, hydraulics, and other pertinent sciences established to review conflicting scientific and technical data and provide recommendations for resolution. Use of the SRP only may be exercised after FEMA and local communities have been engaged in a collaborative consultation process for at least 60 days without a mutually acceptable resolution of an appeal. Additional information regarding the SRP process can be found online at *https://www.floodsrp.org/pdfs/srp_overview.pdf.*

The watersheds and/or communities affected are listed in the tables below. The Preliminary FIRM, and where applicable, FIS report for each community are available for inspection at both the online location *https://www.fema.gov/preliminaryfloodhazard data* and the respective Community Map Repository address listed in the tables. For communities with multiple ongoing Preliminary studies, the studies can be identified by the unique project number and Preliminary FIRM date listed in the tables. Additionally, the current effective FIRM and FIS report for each community are accessible online through the FEMA Map Service Center at *https://msc.fema.gov* for comparison.

(Catalog of Federal Domestic Assistance No. 97.022, ''Flood Insurance.'')

Michael M. Grimm,

Assistant Administrator for Risk Management, Department of Homeland Security, Federal Emergency Management Agency.

Community	Community map repository address
Sonoma County, California and Incorporated Areas Project: 18–09–0012S Preliminary Date: May 15, 2020	
City of Rohnert Park	Development Services Department, City Hall, 130 Avram Avenue, Rohnert Park, CA 94928.
Unincorporated Areas of Sonoma County	Sonoma County Permit and Resource Management, 2550 Ventura Avenue, Santa Rosa, CA 95403.

[FR Doc. 2020–23615 Filed 10–23–20; 8:45 am]

BILLING CODE 9110–12–P

DEPARTMENT OF HOMELAND SECURITY

Federal Emergency Management Agency

[Internal Agency Docket No. FEMA–4564–DR; Docket ID FEMA–2020–0001]

Florida; Amendment No. 1 to Notice of a Major Disaster Declaration

AGENCY: Federal Emergency Management Agency, DHS.

ACTION: Notice.

SUMMARY: This notice amends the notice of a major disaster declaration for the State of Florida (FEMA–4564–DR), dated September 23, 2020, and related determinations.

DATES: This amendment was issued September 30, 2020.

FOR FURTHER INFORMATION CONTACT: Dean Webster, Office of Response and Recovery, Federal Emergency Management Agency, 500 C Street SW, Washington, DC 20472, (202) 646–2833.

SUPPLEMENTARY INFORMATION: The notice of a major disaster declaration for the State of Florida is hereby amended to include the following area among those areas determined to have been adversely affected by the event declared a major disaster by the President in his declaration of September 23, 2020.

Santa Rosa County for debris removal [Category A] and permanent work [Categories C–G](already designated for emergency protective measures [Category B], including direct federal assistance, under the Public Assistance program.)

The following Catalog of Federal Domestic Assistance Numbers (CFDA) are to be used for reporting and drawing funds: 97.030, Community Disaster Loans; 97.031, Cora Brown Fund; 97.032, Crisis Counseling; 97.033, Disaster Legal Services; 97.034, Disaster Unemployment Assistance (DUA); 97.046, Fire Management Assistance Grant; 97.048, Disaster Housing Assistance to Individuals and Households In Presidentially Declared Disaster Areas; 97.049, Presidentially Declared Disaster Assistance—Disaster Housing Operations for Individuals and Households; 97.050 Presidentially Declared Disaster Assistance to Individuals and Households—Other Needs; 97.036, Disaster Grants—Public Assistance (Presidentially Declared Disasters); 97.039, Hazard Mitigation Grant.

Pete Gaynor,

Administrator, Federal Emergency Management Agency.

[FR Doc. 2020–23609 Filed 10–23–20; 8:45 am]

BILLING CODE 9111–23–P

DEPARTMENT OF HOMELAND SECURITY

Federal Emergency Management Agency

[Internal Agency Docket No. FEMA–4563–DR; Docket ID FEMA–2020–0001]

Alabama; Amendment No. 1 to Notice of a Major Disaster Declaration

AGENCY: Federal Emergency Management Agency, DHS.

ACTION: Notice.

SUMMARY: This notice amends the notice of a major disaster declaration for the State of Alabama (FEMA–4563–DR), dated September 20, 2020, and related determinations.

DATES: This amendment was issued September 25, 2020.

FOR FURTHER INFORMATION CONTACT: Dean Webster, Office of Response and Recovery, Federal Emergency Management Agency, 500 C Street SW, Washington, DC 20472, (202) 646–2833.

SUPPLEMENTARY INFORMATION: The notice of a major disaster declaration for the State of Alabama is hereby amended to include debris removal for the following areas among those areas determined to have been adversely affected by the event declared a major disaster by the

President in his declaration of September 20, 2020.

Baldwin, Escambia, and Mobile Counties for debris removal [Category A] (already designated for Individual Assistance and assistance for emergency protective measures [Category B], including direct federal assistance, under the Public Assistance program).

The following Catalog of Federal Domestic Assistance Numbers (CFDA) are to be used for reporting and drawing funds: 97.030, Community Disaster Loans; 97.031, Cora Brown Fund; 97.032, Crisis Counseling; 97.033, Disaster Legal Services; 97.034, Disaster Unemployment Assistance (DUA); 97.046, Fire Management Assistance Grant; 97.048, Disaster Housing Assistance to Individuals and Households In Presidentially Declared Disaster Areas; 97.049, Presidentially Declared Disaster Assistance—Disaster Housing Operations for Individuals and Households; 97.050 Presidentially Declared Disaster Assistance to Individuals and Households—Other Needs; 97.036, Disaster Grants—Public Assistance (Presidentially Declared Disasters); 97.039, Hazard Mitigation Grant.

Pete Gaynor,

Administrator, Federal Emergency Management Agency.

[FR Doc. 2020–23607 Filed 10–23–20; 8:45 am]

BILLING CODE 9111–23–P

DEPARTMENT OF HOMELAND SECURITY

Federal Emergency Management Agency

[Docket ID FEMA–2020–0002]

Final Flood Hazard Determinations

AGENCY: Federal Emergency Management Agency, DHS.

ACTION: Notice.

SUMMARY: Flood hazard determinations, which may include additions or modifications of Base Flood Elevations (BFEs), base flood depths, Special Flood Hazard Area (SFHA) boundaries or zone designations, or regulatory floodways on the Flood Insurance Rate Maps (FIRMs) and where applicable, in the supporting Flood Insurance Study (FIS) reports have been made final for the communities listed in the table below.

The FIRM and FIS report are the basis of the floodplain management measures that a community is required either to adopt or to show evidence of having in effect in order to qualify or remain qualified for participation in the Federal Emergency Management Agency's (FEMA's) National Flood Insurance Program (NFIP). In addition, the FIRM and FIS report are used by insurance agents and others to calculate appropriate flood insurance premium rates for buildings and the contents of those buildings.

DATES: The date of February 26, 2021 has been established for the FIRM and, where applicable, the supporting FIS report showing the new or modified flood hazard information for each community.

ADDRESSES: The FIRM, and if applicable, the FIS report containing the final flood hazard information for each community is available for inspection at the respective Community Map Repository address listed in the tables below and will be available online through the FEMA Map Service Center at *https://msc.fema.gov* by the date indicated above.

FOR FURTHER INFORMATION CONTACT: Rick Sacbibit, Chief, Engineering Services Branch, Federal Insurance and Mitigation Administration, FEMA, 400 C Street SW, Washington, DC 20472, (202) 646–7659, or (email) *patrick.sacbibit@fema.dhs.gov;* or visit the FEMA Mapping and Insurance eXchange (FMIX) online at *https://www.floodmaps.fema.gov/fhm/fmx_main.html.*

SUPPLEMENTARY INFORMATION: The Federal Emergency Management Agency (FEMA) makes the final determinations listed below for the new or modified flood hazard information for each community listed. Notification of these changes has been published in newspapers of local circulation and 90 days have elapsed since that publication. The Deputy Associate Administrator for Insurance and Mitigation has resolved any appeals resulting from this notification.

This final notice is issued in accordance with section 110 of the Flood Disaster Protection Act of 1973, 42 U.S.C. 4104, and 44 CFR part 67. FEMA has developed criteria for floodplain management in floodprone areas in accordance with 44 CFR part 60.

Interested lessees and owners of real property are encouraged to review the new or revised FIRM and FIS report available at the address cited below for each community or online through the FEMA Map Service Center at *https://msc.fema.gov.*

The flood hazard determinations are made final in the watersheds and/or communities listed in the table below.

(Catalog of Federal Domestic Assistance No. 97.022, ''Flood Insurance.'')

Michael M. Grimm,

Assistant Administrator for Risk Management, Department of Homeland Security, Federal Emergency Management Agency.

Community	Community map repository address
Pulaski County, Arkansas and Incorporated Areas Docket No.: FEMA–B–1976	
City of Little Rock	Public Works Administration Building, 701 West Markham Street, Little Rock, AR 72201.
Kauai County, Hawaii Docket No.: FEMA–B–1963	
Kauai County	Kauai County Department of Public Works, 4444 Rice Street, Lihue, HI 96766.
Metropolitan Government of Louisville and Jefferson County, Kentucky (All Jurisdictions) Docket No.: FEMA–B–1860	
Metropolitan Government of Louisville and Jefferson County, Kentucky	Metropolitan Government of Louisville and Jefferson County Metropolitan Sewer District, 700 West Liberty Street, Louisville, KY 40203.

Community	Community map repository address
Juniata County, Pennsylvania (All Jurisdictions) **Docket No.: FEMA–B–1923**	
Township of Susquehanna	Susquehanna Township Municipal Building, 580 Gamby Hill Road, Liverpool, PA 17045.
Union County, Pennsylvania (All Jurisdictions) **Docket No.: FEMA–B–1923**	
Township of Union	Union Township Municipal Building, 70 Municipal Lane, Winfield, PA 17889.
Cheatham County, Tennessee and Incorporated Areas **Docket No.: FEMA–B–1905**	
Town of Ashland City	City Hall, 101 Court Street, Ashland City, TN 37015.
Town of Pleasant View	City Hall, 1008 Civic Court, Pleasant View, TN 37146.
Unincorporated Areas of Cheatham County	Cheatham County Building and Codes Department, 111 Frey Street, Ashland City, TN 37015.
Robertson County, Tennessee and Incorporated Areas **Docket No.: FEMA–B–1905**	
Town of Coopertown	Coopertown City Hall, 2525 Burgess Gower Road, Springfield, TN 37172.
Unincorporated Areas of Robertson County	Robertson County Planning and Zoning Building, 527 South Brown Street, Springfield, TN 37172.
Sumner County, Tennessee and Incorporated Areas **Docket No.: FEMA–B–1905**	
City of Goodlettsville	Planning and Zoning Department, 318 North Main Street, Goodlettsville, TN 37072.
City of Hendersonville	City Hall, 101 Maple Drive North, Hendersonville, TN 37075.
City of Millersville	City Hall, 1246 Louisville Highway, Millersville, TN 37072.
Unincorporated Areas of Sumner County	Sumner County Building and Codes Department, 355 North Belvedere Drive, Room 208, Gallatin, TN 37066.
Williamson County, Tennessee and Incorporated Areas **Docket No.: FEMA–B–1905**	
City of Brentwood	City Hall, 5211 Maryland Way, Brentwood, TN 37027.
Town of Nolensville	Town Hall, 7218 Nolensville Road, Nolensville, TN 37135.
Unincorporated Areas of Williamson County	Williamson County Engineering Department, 1320 West Main Street, Suite 400, Franklin, TN 37064.
Culpeper County, Virginia and Incorporated Areas **Docket No.: FEMA–B–1929**	
Town of Culpeper	Town Hall, Planning and Community Development, 400 South Main Street, Suite 301, Culpeper, VA 22701.
Unincorporated Areas of Culpeper County	Culpeper County Planning and Zoning Department, 302 North Main Street, Culpeper, VA 22701.
Rappahannock County, Virginia and Incorporated Areas **Docket No.: FEMA–B–1921**	
Town of Washington	Town Hall, 567 Mount Salem Avenue, Suite 3, Washington, VA 22747.
Unincorporated Areas of Rappahanock County	Rappahannock County Zoning Administrator Office, 311H Gay Street, Washington, VA 22747.

[FR Doc. 2020–23618 Filed 10–23–20; 8:45 am]

BILLING CODE 9111–23–P

DEPARTMENT OF HOMELAND SECURITY

Federal Emergency Management Agency

[Internal Agency Docket No. FEMA–3543–EM; Docket ID FEMA–2020–0001]

Louisiana; Emergency and Related Determinations

AGENCY: Federal Emergency Management Agency, DHS.

ACTION: Notice.

SUMMARY: This is a notice of the Presidential declaration of an emergency for the State of Louisiana (FEMA–3543–EM), dated September 14, 2020, and related determinations.

DATES: The declaration was issued September 14, 2020.

FOR FURTHER INFORMATION CONTACT: Dean Webster, Office of Response and Recovery, Federal Emergency Management Agency, 500 C Street SW, Washington, DC 20472, (202) 646–2833.

SUPPLEMENTARY INFORMATION: Notice is hereby given that, in a letter dated September 14, 2020, the President issued an emergency declaration under the authority of the Robert T. Stafford Disaster Relief and Emergency Assistance Act, 42 U.S.C. 5121–5207 (the Stafford Act), as follows:

I have determined that the emergency conditions in the State of Louisiana resulting from Hurricane Sally beginning on September 13, 2020, and continuing, are of sufficient severity and magnitude to warrant an emergency declaration under the Robert T. Stafford Disaster Relief and Emergency Assistance Act, 42 U.S.C. 5121 *et seq.* (''the Stafford Act''). Therefore, I declare that such an emergency exists in the State of Louisiana.

You are authorized to provide appropriate assistance for required emergency measures, authorized under title V of the Stafford Act, to save lives and to protect property and public health and safety, and to lessen or avert the threat of a catastrophe in the designated areas. Specifically, you are authorized to provide Public Assistance Category B emergency protective measures, including direct Federal assistance in selected areas and Public Assistance Category B emergency protective measures, limited to direct Federal assistance in the other designated areas.

Consistent with the requirement that Federal assistance be supplemental, any Federal funds provided under the Stafford Act for Public Assistance will be limited to 75 percent of the total eligible costs. In order to provide Federal assistance, you are hereby authorized to allocate from funds available for these purposes such amounts as you find necessary for Federal emergency assistance and administrative expenses.

Further, you are authorized to make changes to this declaration for the approved assistance to the extent allowable under the Stafford Act.

The Federal Emergency Management Agency (FEMA) hereby gives notice that pursuant to the authority vested in the Administrator, Department of Homeland Security, under Executive Order 12148, as amended, John E. Long, of FEMA is appointed to act as the Federal Coordinating Officer for this declared emergency.

The following areas of the State of Louisiana have been designated as adversely affected by this declared emergency:

Emergency protective measures (Category B), including direct Federal assistance for Acadia, Ascension, Assumption, East Baton Rouge, East Feliciana, Evangeline, Iberia, Iberville, Jefferson, Lafayette, Lafourche, Livingston, Orleans, Plaquemines, Pointe Coupee, St. Bernard, St. Charles, St. Helena, St. James, St. John the Baptist, St. Landry, St. Martin, St. Mary, St. Tammany, Tangipahoa, Terrebonne, Vermilion, Washington, West Baton Rouge, and West Feliciana Parishes.

Emergency protective measures (Category B), limited to direct Federal assistance for Allen, Avoyelles, Beauregard, Bienville, Bossier, Caddo, Calcasieu, Caldwell, Cameron, Catahoula, Claiborne, Concordia, De Soto, East Carroll, Franklin, Grant, Jackson, Jefferson Davis, La Salle, Lincoln, Madison, Morehouse, Natchitoches, Ouachita, Rapides, Red River, Richland, Sabine, Tensas, Union, Vernon, Webster, West Carroll, and Winn Parishes.

The following Catalog of Federal Domestic Assistance Numbers (CFDA) are to be used for reporting and drawing funds: 97.030, Community Disaster Loans; 97.031, Cora Brown Fund; 97.032, Crisis Counseling; 97.033, Disaster Legal Services; 97.034, Disaster Unemployment Assistance (DUA); 97.046, Fire Management Assistance Grant; 97.048, Disaster Housing Assistance to Individuals and Households In Presidentially Declared Disaster Areas; 97.049, Presidentially Declared Disaster Assistance—Disaster Housing Operations for Individuals and Households; 97.050, Presidentially Declared Disaster Assistance to Individuals and Households—Other Needs; 97.036, Disaster Grants—Public Assistance (Presidentially Declared Disasters); 97.039, Hazard Mitigation Grant.

Pete Gaynor,

Administrator, Federal Emergency Management Agency.

[FR Doc. 2020–23597 Filed 10–23–20; 8:45 am]

BILLING CODE 9111–23–P

DEPARTMENT OF HOMELAND SECURITY

Federal Emergency Management Agency

[Internal Agency Docket No. FEMA–3544–EM; Docket ID FEMA–2020–0001]

Mississippi; Emergency and Related Determinations

AGENCY: Federal Emergency Management Agency, DHS.

ACTION: Notice.

SUMMARY: This is a notice of the Presidential declaration of an emergency for the State of Mississippi (FEMA–3544–EM), dated September 14, 2020, and related determinations.

DATES: The declaration was issued September 14, 2020.

FOR FURTHER INFORMATION CONTACT: Dean Webster, Office of Response and Recovery, Federal Emergency Management Agency, 500 C Street SW, Washington, DC 20472, (202) 646–2833.

SUPPLEMENTARY INFORMATION: Notice is hereby given that, in a letter dated September 14, 2020, the President issued an emergency declaration under the authority of the Robert T. Stafford Disaster Relief and Emergency Assistance Act, 42 U.S.C. 5121–5207 (the Stafford Act), as follows:

I have determined that the emergency conditions in certain areas of the State of Mississippi resulting from Hurricane Sally beginning on September 14, 2020, and continuing, are of sufficient severity and magnitude to warrant an emergency declaration under the Robert T. Stafford Disaster Relief and Emergency Assistance Act, 42 U.S.C. 5121 *et seq.* (''the Stafford Act''). Therefore, I declare that such an emergency exists in the State of Mississippi.

You are authorized to provide appropriate assistance for required emergency measures, authorized under title V of the Stafford Act, to save lives and to protect property and public health and safety, and to lessen or avert the threat of a catastrophe in the designated areas. Specifically, you are authorized to provide assistance for emergency protective measures, (Category B), including direct Federal assistance, under the Public Assistance program.

Consistent with the requirement that Federal assistance be supplemental, any Federal funds provided under the Stafford Act for Public Assistance will be limited to 75 percent of the total eligible costs. In order to provide Federal assistance, you are hereby authorized to allocate from funds available for these purposes such amounts as you find necessary for Federal emergency assistance and administrative expenses.

Further, you are authorized to make changes to this declaration for the approved assistance to the extent allowable under the Stafford Act.

The Federal Emergency Management Agency (FEMA) hereby gives notice that pursuant to the authority vested in the Administrator, Department of Homeland Security, under Executive Order 12148, as amended, Brett H. Howard, of FEMA is appointed to act as the Federal Coordinating Officer for this declared emergency.

The following areas of the State of Mississippi have been designated as adversely affected by this declared emergency:

Emergency protective measures (Category B), including direct Federal assistance, under the Public Assistance program for Adams, Amite, Covington, Forrest, Franklin, George, Greene, Hancock, Harrison, Jackson, Jefferson, Jefferson Davis, Jones, Lamar, Lawrence, Lincoln, Marion, Pearl River, Perry, Pike, Stone, Walthall, Wayne, and Wilkinson Counties.

The following Catalog of Federal Domestic Assistance Numbers (CFDA) are to be used for reporting and drawing funds: 97.030, Community Disaster Loans; 97.031, Cora Brown Fund; 97.032, Crisis Counseling; 97.033, Disaster Legal Services; 97.034, Disaster Unemployment Assistance (DUA); 97.046, Fire Management Assistance Grant; 97.048, Disaster Housing Assistance to Individuals and Households In Presidentially Declared Disaster Areas; 97.049, Presidentially Declared Disaster Assistance—Disaster Housing Operations for Individuals and Households; 97.050, Presidentially Declared Disaster Assistance to Individuals and Households—Other Needs; 97.036, Disaster Grants—Public Assistance (Presidentially Declared Disasters); 97.039, Hazard Mitigation Grant.

Pete Gaynor,

Administrator, Federal Emergency Management Agency.

[FR Doc. 2020–23599 Filed 10–23–20; 8:45 am]

BILLING CODE 9111–23–P

DEPARTMENT OF HOMELAND SECURITY

Federal Emergency Management Agency

[Internal Agency Docket No. FEMA–3546–EM; Docket ID FEMA–2020–0001]

Florida; Emergency and Related Determinations

AGENCY: Federal Emergency Management Agency, DHS.

ACTION: Notice.

SUMMARY: This is a notice of the Presidential declaration of an emergency for the State of Florida (FEMA–3546–EM), dated September 15, 2020, and related determinations.

DATES: The declaration was issued September 15, 2020.

FOR FURTHER INFORMATION CONTACT: Dean Webster, Office of Response and Recovery, Federal Emergency Management Agency, 500 C Street SW, Washington, DC 20472, (202) 646–2833.

SUPPLEMENTARY INFORMATION: Notice is hereby given that, in a letter dated September 15, 2020, the President issued an emergency declaration under the authority of the Robert T. Stafford Disaster Relief and Emergency Assistance Act, 42 U.S.C. 5121–5207 (the Stafford Act), as follows:

I have determined that the emergency conditions in certain areas of the State of Florida resulting from Hurricane Sally beginning on September 14, 2020, and continuing, are of sufficient severity and magnitude to warrant an emergency declaration under the Robert T. Stafford Disaster Relief and Emergency Assistance Act, 42 U.S.C. 5121 *et seq.* (''the Stafford Act'').

Therefore, I declare that such an emergency exists in the State of Florida.

You are authorized to provide appropriate assistance for required emergency measures, authorized under title V of the Stafford Act, to save lives and to protect property and public health and safety, and to lessen or avert the threat of a catastrophe in the designated areas. Specifically, you are authorized to provide Public Assistance Category B emergency protective measures, including direct Federal assistance in selected areas and Public Assistance Category B emergency protective measures, limited to direct Federal assistance in the other designated areas.

Consistent with the requirement that Federal assistance be supplemental, any Federal funds provided under the Stafford Act for Public Assistance will be limited to 75 percent of the total eligible costs. In order to provide Federal assistance, you are hereby authorized to allocate from funds available for these purposes such amounts as you find necessary for Federal emergency assistance and administrative expenses.

Further, you are authorized to make changes to this declaration for the approved assistance to the extent allowable under the Stafford Act.

The Federal Emergency Management Agency (FEMA) hereby gives notice that pursuant to the authority vested in the Administrator, Department of Homeland Security, under Executive Order 12148, as amended, Jeffrey L. Coleman, of FEMA is appointed to act as the Federal Coordinating Officer for this declared emergency.

The following areas of the State of Florida have been designated as adversely affected by this declared emergency:

Emergency protective measures (Category B), including direct Federal assistance, under the Public Assistance program for Bay, Escambia, Holmes, Okaloosa, Santa Rosa, Walton, and Washington Counties.

Emergency protective measures (Category B), limited to direct Federal assistance, under the Public Assistance program for Calhoun, Franklin, Gadsden, Gulf, Jackson, and Liberty Counties.

The following Catalog of Federal Domestic Assistance Numbers (CFDA) are to be used for reporting and drawing funds: 97.030, Community Disaster Loans; 97.031, Cora Brown Fund; 97.032, Crisis Counseling; 97.033, Disaster Legal Services; 97.034, Disaster Unemployment Assistance (DUA); 97.046, Fire Management Assistance Grant; 97.048, Disaster Housing Assistance to Individuals and Households In Presidentially Declared Disaster Areas; 97.049, Presidentially Declared Disaster Assistance—Disaster Housing Operations for Individuals and Households; 97.050, Presidentially Declared Disaster Assistance to Individuals and Households—Other Needs; 97.036, Disaster Grants—Public Assistance (Presidentially Declared Disasters); 97.039, Hazard Mitigation Grant.

Pete Gaynor,

Administrator, Federal Emergency Management Agency.

[FR Doc. 2020–23601 Filed 10–23–20; 8:45 am]

BILLING CODE 9111–23–P

DEPARTMENT OF HOMELAND SECURITY

Federal Emergency Management Agency

[Internal Agency Docket No. FEMA–4563–DR; Docket ID FEMA–2020–0001]

Alabama; Major Disaster and Related Determinations

AGENCY: Federal Emergency Management Agency, DHS.

ACTION: Notice.

SUMMARY: This is a notice of the Presidential declaration of a major disaster for the State of Alabama (FEMA–4563–DR), dated September 20, 2020, and related determinations.

DATES: The declaration was issued September 20, 2020.

FOR FURTHER INFORMATION CONTACT: Dean Webster, Office of Response and Recovery, Federal Emergency Management Agency, 500 C Street SW, Washington, DC 20472, (202) 646–2833.

SUPPLEMENTARY INFORMATION: Notice is hereby given that, in a letter dated September 20, 2020, the President issued a major disaster declaration under the authority of the Robert T. Stafford Disaster Relief and Emergency Assistance Act, 42 U.S.C. 5121 *et seq.* (the ''Stafford Act''), as follows:

I have determined that the damage in the State of Alabama resulting from Hurricane Sally beginning on September 14, 2020, continuing, is of sufficient severity and

magnitude to warrant a major disaster declaration under the Robert T. Stafford Disaster Relief and Emergency Assistance Act, 42 U.S.C. 5121 *et seq.* (the ''Stafford Act''). Therefore, I declare that such a major disaster exists in the State of Alabama.

In order to provide Federal assistance, you are hereby authorized to allocate from funds available for these purposes such amounts as you find necessary for Federal disaster assistance and administrative expenses.

You are authorized to provide Individual Assistance and emergency protective measures (Category B), including direct Federal assistance, under the Public Assistance program in the designated areas; Hazard Mitigation throughout the State; and any other forms of assistance under the Stafford Act that you deem appropriate subject to completion of Preliminary Damage Assessments (PDAs).

Consistent with the requirement that Federal assistance is supplemental, any Federal funds provided under the Stafford Act for Public Assistance, Hazard Mitigation, and Other Needs Assistance under section 408 will be limited to 75 percent of the total eligible costs.

Further, you are authorized to make changes to this declaration for the approved assistance to the extent allowable under the Stafford Act.

The time period prescribed for the implementation of section 310(a), Priority to Certain Applications for Public Facility and Public Housing Assistance, 42 U.S.C. 5153, shall be for a period not to exceed six months after the date of this declaration.

The Federal Emergency Management Agency (FEMA) hereby gives notice that pursuant to the authority vested in the Administrator, under Executive Order 12148, as amended, Allan Jarvis, of FEMA is appointed to act as the Federal Coordinating Officer for this major disaster.

The following areas of the State of Alabama have been designated as adversely affected by this major disaster:

Baldwin, Escambia, and Mobile Counties for Individual Assistance.

Emergency protective measures (Category B), including direct Federal assistance, under the Public Assistance program for Baldwin, Escambia, and Mobile Counties and the Poarch Band of Creek Indians.

All areas within the State of Alabama are eligible for assistance under the Hazard Mitigation Grant Program.

The following Catalog of Federal Domestic Assistance Numbers (CFDA) are to be used for reporting and drawing funds: 97.030, Community Disaster Loans; 97.031, Cora Brown Fund; 97.032, Crisis Counseling; 97.033, Disaster Legal Services; 97.034, Disaster Unemployment Assistance (DUA); 97.046, Fire Management Assistance Grant; 97.048, Disaster Housing Assistance to Individuals and Households In Presidentially Declared Disaster Areas; 97.049, Presidentially Declared Disaster Assistance—Disaster Housing Operations for Individuals and Households; 97.050, Presidentially Declared Disaster Assistance to Individuals and Households—Other Needs; 97.036, Disaster Grants—Public Assistance (Presidentially Declared Disasters); 97.039, Hazard Mitigation Grant.

Pete Gaynor,

Administrator, Federal Emergency Management Agency.

[FR Doc. 2020–23608 Filed 10–23–20; 8:45 am]

BILLING CODE 9111–23–P

DEPARTMENT OF HOMELAND SECURITY

Federal Emergency Management Agency

[Internal Agency Docket No. FEMA–4564–DR; Docket ID FEMA–2020–0001]

Florida; Amendment No. 2 to Notice of a Major Disaster Declaration

AGENCY: Federal Emergency Management Agency, DHS.

ACTION: Notice.

SUMMARY: This notice amends the notice of a major disaster declaration for the State of Florida (FEMA–4564–DR), dated September 23, 2020, and related determinations.

DATES: This amendment was issued October 2, 2020.

FOR FURTHER INFORMATION CONTACT: Dean Webster, Office of Response and Recovery, Federal Emergency Management Agency, 500 C Street SW, Washington, DC 20472, (202) 646–2833.

SUPPLEMENTARY INFORMATION: The notice of a major disaster declaration for the State of Florida is hereby amended to include the Individual Assistance program for the following areas among those areas determined to have been adversely affected by the event declared a major disaster by the President in his declaration of September 23, 2020.

Bay, Okaloosa, and Walton Counties for Individual Assistance (already designated for emergency protective measures [Category B], including direct federal assistance, under the Public Assistance program.)

Escambia and Santa Rosa Counties for Individual Assistance (already designated for Public Assistance, including direct Federal assistance.)

The following Catalog of Federal Domestic Assistance Numbers (CFDA) are to be used for reporting and drawing funds: 97.030, Community Disaster Loans; 97.031, Cora Brown Fund; 97.032, Crisis Counseling; 97.033, Disaster Legal Services; 97.034, Disaster Unemployment Assistance (DUA); 97.046, Fire Management Assistance Grant; 97.048, Disaster Housing Assistance to Individuals and Households In Presidentially Declared Disaster Areas; 97.049, Presidentially Declared Disaster Assistance—Disaster Housing Operations for Individuals and Households; 97.050 Presidentially Declared Disaster Assistance to Individuals and Households—Other Needs; 97.036, Disaster Grants—Public Assistance (Presidentially Declared Disasters); 97.039, Hazard Mitigation Grant.

Pete Gaynor,

Administrator, Federal Emergency Management Agency.

[FR Doc. 2020–23610 Filed 10–23–20; 8:45 am]

BILLING CODE 9111–23–P

DEPARTMENT OF HOMELAND SECURITY

Federal Emergency Management Agency

[Internal Agency Docket No. FEMA–4559–DR; Docket ID FEMA–2020–0001]

Louisiana; Amendment No. 11 to Notice of a Major Disaster Declaration

AGENCY: Federal Emergency Management Agency, DHS.

ACTION: Notice.

SUMMARY: This notice amends the notice of a major disaster declaration for the State of Louisiana (FEMA–4559–DR), dated August 28, 2020, and related determinations.

DATES: This amendment was issued October 5, 2020.

FOR FURTHER INFORMATION CONTACT: Dean Webster, Office of Response and Recovery, Federal Emergency Management Agency, 500 C Street SW, Washington, DC 20472, (202) 646–2833.

SUPPLEMENTARY INFORMATION: The notice of a major disaster declaration for the State of Louisiana is hereby amended to include the following areas among those areas determined to have been adversely affected by the event declared a major disaster by the President in his declaration of August 28, 2020.

Grant, Jackson, Lincoln, Ouachita, Rapides, and Winn Parishes for permanent work [Categories C–G] (already designated for Individual Assistance and debris removal and emergency protective measures [Categories A and B], including direct federal assistance, under the Public Assistance program).

The following Catalog of Federal Domestic Assistance Numbers (CFDA) are to be used for reporting and drawing funds: 97.030, Community Disaster Loans; 97.031, Cora Brown Fund; 97.032, Crisis Counseling; 97.033, Disaster Legal Services; 97.034, Disaster Unemployment Assistance (DUA); 97.046, Fire Management Assistance Grant; 97.048, Disaster Housing Assistance to Individuals and Households In Presidentially Declared Disaster Areas; 97.049, Presidentially Declared Disaster Assistance—Disaster Housing Operations for Individuals

and Households; 97.050 Presidentially Declared Disaster Assistance to Individuals and Households—Other Needs; 97.036, Disaster Grants—Public Assistance (Presidentially Declared Disasters); 97.039, Hazard Mitigation Grant.

Pete Gaynor,

Administrator, Federal Emergency Management Agency.

[FR Doc. 2020–23605 Filed 10–23–20; 8:45 am]

BILLING CODE 9111–23–P

DEPARTMENT OF HOMELAND SECURITY

Federal Emergency Management Agency

[Internal Agency Docket No. FEMA–3543–EM; Docket ID FEMA–2020–0001]

Louisiana; Amendment No. 1 to Notice of an Emergency Declaration

AGENCY: Federal Emergency Management Agency, DHS.

ACTION: Notice.

SUMMARY: This notice amends the notice of an emergency declaration for the State of Louisiana (FEMA–3543–EM), dated September 14, 2020, and related determinations.

DATES: This amendment was issued September 30, 2020.

FOR FURTHER INFORMATION CONTACT: Dean Webster, Office of Response and Recovery, Federal Emergency Management Agency, 500 C Street SW, Washington, DC 20472, (202) 646–2833.

SUPPLEMENTARY INFORMATION: Notice is hereby given that the incident period for this emergency is closed effective September 16, 2020.

The following Catalog of Federal Domestic Assistance Numbers (CFDA) are to be used for reporting and drawing funds: 97.030, Community Disaster Loans; 97.031, Cora Brown Fund; 97.032, Crisis Counseling; 97.033, Disaster Legal Services; 97.034, Disaster Unemployment Assistance (DUA); 97.046, Fire Management Assistance Grant; 97.048, Disaster Housing Assistance to Individuals and Households In Presidentially Declared Disaster Areas; 97.049, Presidentially Declared Disaster Assistance—Disaster Housing Operations for Individuals and Households; 97.050, Presidentially Declared Disaster Assistance to Individuals and Households—Other Needs; 97.036, Disaster Grants—Public Assistance (Presidentially Declared Disasters); 97.039, Hazard Mitigation Grant.

Pete Gaynor,

Administrator, Federal Emergency Management Agency.

[FR Doc. 2020–23596 Filed 10–23–20; 8:45 am]

BILLING CODE 9111–23–P

DEPARTMENT OF HOMELAND SECURITY

Federal Emergency Management Agency

[Internal Agency Docket No. FEMA–3545–EM; Docket ID FEMA–2020–0001]

Alabama; Emergency and Related Determinations

AGENCY: Federal Emergency Management Agency, DHS.

ACTION: Notice.

SUMMARY: This is a notice of the Presidential declaration of an emergency for the State of Alabama (FEMA–3545–EM), dated September 14, 2020, and related determinations.

DATES: The declaration was issued September 14, 2020.

FOR FURTHER INFORMATION CONTACT: Dean Webster, Office of Response and Recovery, Federal Emergency Management Agency, 500 C Street SW, Washington, DC 20472, (202) 646–2833.

SUPPLEMENTARY INFORMATION: Notice is hereby given that, in a letter dated September 14, 2020, the President issued an emergency declaration under the authority of the Robert T. Stafford Disaster Relief and Emergency Assistance Act, 42 U.S.C. 5121–5207 (the Stafford Act), as follows:

I have determined that the emergency conditions in the State of Alabama resulting from Hurricane Sally beginning on September 14, 2020, and continuing, are of sufficient severity and magnitude to warrant an emergency declaration under the Robert T. Stafford Disaster Relief and Emergency Assistance Act, 42 U.S.C. 5121 *et seq.* (''the Stafford Act''). Therefore, I declare that such an emergency exists in the State of Alabama.

You are authorized to provide appropriate assistance for required emergency measures, authorized under title V of the Stafford Act, to save lives and to protect property and public health and safety, and to lessen or avert the threat of a catastrophe in the designated areas. Specifically, you are authorized to provide Public Assistance Category B emergency protective measures, including direct Federal assistance in selected areas and Public Assistance Category B emergency protective measures, limited to direct Federal assistance in the other designated areas.

Consistent with the requirement that Federal assistance be supplemental, any Federal funds provided under the Stafford Act for Public Assistance will be limited to 75 percent of the total eligible costs. In order to provide Federal assistance, you are hereby authorized to allocate from funds available for these purposes such amounts as you find necessary for Federal emergency assistance and administrative expenses.

Further, you are authorized to make changes to this declaration for the approved assistance to the extent allowable under the Stafford Act.

The Federal Emergency Management Agency (FEMA) hereby gives notice that pursuant to the authority vested in the Administrator, Department of Homeland Security, under Executive Order 12148, as amended, Allan Jarvis, of FEMA is appointed to act as the Federal Coordinating Officer for this declared emergency.

The following areas of the State of Alabama have been designated as adversely affected by this declared emergency:

Emergency protective measures (Category B), including direct Federal assistance, under the Public Assistance program for Autauga, Baldwin, Barbour, Bibb, Blount, Bullock, Butler, Calhoun, Chambers, Cherokee, Chilton, Choctaw, Clarke, Clay, Cleburne, Coffee, Conecuh, Coosa, Covington, Crenshaw, Dale, Dallas, Elmore, Escambia, Etowah, Geneva, Greene, Hale, Henry, Houston, Jefferson, Lee, Lowndes, Macon, Marengo, Mobile, Monroe, Montgomery, Perry, Pickens, Pike, Randolph, Russell, Shelby, St. Clair, Sumter, Talladega, Tallapoosa, Tuscaloosa, Washington, and Wilcox Counties and the Poarch Band of Creek Indians.

Emergency protective measures (Category B), limited to direct Federal assistance, under the Public Assistance program for Colbert, Cullman, DeKalb, Fayette, Franklin, Jackson, Lamar, Lauderdale, Lawrence, Limestone, Madison, Marion, Marshall, Morgan, Walker, and Winston Counties.

The following Catalog of Federal Domestic Assistance Numbers (CFDA) are to be used for reporting and drawing funds: 97.030, Community Disaster Loans; 97.031, Cora Brown Fund; 97.032, Crisis Counseling; 97.033, Disaster Legal Services; 97.034, Disaster Unemployment Assistance (DUA); 97.046, Fire Management Assistance Grant; 97.048, Disaster Housing Assistance to Individuals and Households In Presidentially Declared Disaster Areas; 97.049, Presidentially Declared Disaster Assistance—Disaster Housing Operations for Individuals and Households; 97.050, Presidentially Declared Disaster Assistance to Individuals and Households—Other Needs; 97.036, Disaster Grants—Public Assistance (Presidentially Declared Disasters); 97.039, Hazard Mitigation Grant.

Pete Gaynor,

Administrator, Federal Emergency Management Agency.

[FR Doc. 2020–23600 Filed 10–23–20; 8:45 am]

BILLING CODE 9111–23–P

DEPARTMENT OF HOMELAND SECURITY

Federal Emergency Management Agency

[Internal Agency Docket No. FEMA–4567–DR; Docket ID FEMA–2020–0001]

New York; Amendment No. 1 to Notice of a Major Disaster Declaration

AGENCY: Federal Emergency Management Agency, DHS.

ACTION: Notice.

SUMMARY: This notice amends the notice of a major disaster declaration for the State of New York (FEMA–4567–DR), dated October 2, 2020, and related determinations.

DATES: This change occurred on October 2, 2020.

FOR FURTHER INFORMATION CONTACT: Dean Webster, Office of Response and Recovery, Federal Emergency Management Agency, 500 C Street SW, Washington, DC 20472, (202) 646–2833.

SUPPLEMENTARY INFORMATION: The Federal Emergency Management Agency (FEMA) hereby gives notice that pursuant to the authority vested in the Administrator, under Executive Order 12148, as amended, Lai Sun Yee, of FEMA is appointed to act as the Federal Coordinating Officer for this disaster.

This action terminates the appointment of Seamus K. Leary as Federal Coordinating Officer for this disaster.

The following Catalog of Federal Domestic Assistance Numbers (CFDA) are to be used for reporting and drawing funds: 97.030, Community Disaster Loans; 97.031, Cora Brown Fund; 97.032, Crisis Counseling; 97.033, Disaster Legal Services; 97.034, Disaster Unemployment Assistance (DUA); 97.046, Fire Management Assistance Grant; 97.048, Disaster Housing Assistance to Individuals and Households In Presidentially Declared Disaster Areas; 97.049, Presidentially Declared Disaster Assistance—Disaster Housing Operations for Individuals and Households; 97.050, Presidentially Declared Disaster Assistance to Individuals and Households—Other Needs; 97.036, Disaster Grants—Public Assistance (Presidentially Declared Disasters); 97.039, Hazard Mitigation Grant.

Pete Gaynor,

Administrator, Federal Emergency Management Agency.

[FR Doc. 2020–23612 Filed 10–23–20; 8:45 am]

BILLING CODE 9111–23–P

DEPARTMENT OF HOUSING AND URBAN DEVELOPMENT

[Docket No. FR–6237–N–01]

Notice of a Federal Advisory Committee Meeting—Manufactured Housing Consensus Committee

AGENCY: Office of the Assistant Secretary for Housing—Federal Housing Commissioner, Department of Housing and Urban Development (HUD).

ACTION: Notice of Federal Advisory Committee Meetings: Manufactured Housing Consensus Committee (MHCC).

SUMMARY: This notice sets forth the schedule and proposed agendas for two teleconference meetings of the MHCC: Structure and Design Subcommittee, and Regulatory Enforcement Subcommittee. The meetings are open to the public. The agenda for each meeting provides an opportunity for citizens to comment on the business before the MHCC Subcommittees.

DATES:

- The Structure and Design Subcommittee meeting will be held on November 12, 2020, 10:00 a.m. to 4:00 p.m. Eastern Standard Time (EST).
- The Regulatory Enforcement Subcommittee meeting will be held on November 19, 2020, 10:00 a.m. to 4:00 p.m. Eastern Standard Time (EST).

The teleconference number for all teleconferences is: 301–715–8592 or 646–558–8656 and the Meeting ID is: 96243433408. To access the webinar, use the following link: *https://zoom.us/j/96243433408.*

FOR FURTHER INFORMATION CONTACT: Teresa B. Payne, Administrator, Office of Manufactured Housing Programs, Department of Housing and Urban Development, 451 7th Street SW, Room 9166, Washington, DC 20410, telephone 202–402–2698 (this is not a toll-free number). Persons who have difficulty hearing or speaking may access this number via TTY by calling the Federal Relay Service at 800–877–8339 (this is a toll-free number).

SUPPLEMENTARY INFORMATION: Notice of these meetings are provided in accordance with the Federal Advisory Committee Act, 5 U.S.C. App. 10(a)(2) through implementing regulations at 41 CFR 102–3.150. The MHCC was established by the National Manufactured Housing Construction and Safety Standards Act of 1974, 42 U.S.C. 5403(a)(3), as amended by the Manufactured Housing Improvement Act of 2000, (Pub. L. 106–569, Sec. 601, *et seq.*). According to 42 U.S.C. 5403, as amended, the purposes of the MHCC are to:

- Provide periodic recommendations to the Secretary to adopt, revise, and interpret the Federal manufactured housing construction and safety standards in accordance with this subsection;
- Provide periodic recommendations to the Secretary to adopt, revise, and interpret the procedural and enforcement regulations, including regulations specifying the permissible scope and conduct of monitoring in accordance with subsection (b); and
- Be organized and carry out its business in a manner that guarantees a fair opportunity for the expression and consideration of various positions and for public participation.

The MHCC is deemed an advisory committee not composed of Federal employees.

Public Comment: Citizens wishing to make comments on the business of the MHCC must register in advance by contacting the Administering Organization (AO), Home Innovation Research Labs; Attention: Kevin Kauffman, 400 Prince Georges Blvd., Upper Marlboro, MD 20774, or email to *mhcc@homeinnovation.com,* or call 888–602–4663. With advance registration, members of the public will have an opportunity to provide written comments relative to agenda topics for the Subcommittee's consideration. All written comments must be provided to *mhcc@homeinnovation.com.*

- For the November 12, 2020 Structure and Design Subcommittee teleconference, the written comments must be provided no later than November 4, 2020.
- For the November 19, 2020 Regulatory Enforcement Subcommittee teleconference, the written comments must be provided no later than November 11, 2020.

Please note, written comments submitted will not be read during the meeting but will be provided to the Subcommittee members prior to the meeting. The MHCC will also provide an opportunity for oral public comments on specific matters before the Subcommittees at each meeting. The total amount of time for oral comments will be 30 minutes, in two 15-minute periods, with each commenter limited to two minutes to ensure pertinent Subcommittee business is completed and all public comments can be expressed. The Subcommittee will not respond to individual written or oral statements; however, it will take all public comments into account in its deliberations. The MHCC strives to accommodate citizen comments to the extent possible within the time constraints of the meeting agenda.

Tentative Agenda for Structure and Design Subcommittee Teleconference

Thursday, November 12, 2020—10 a.m. to 4 p.m. EDT

I. Call to Order—Subcommittee Chair & Designated Federal Officer (DFO) Roll Call—AO

II. Opening Remarks—Subcommittee Chair & DFO

III. Approval of Minutes From October 30, 2019 Structure and Design Subcommittee Meeting Occurring as Part of the MHCC Annual Meeting

IV. Public Comment Period—15 Minutes

V. Assigned Proposed Change Review

Proposed Changes Log:

- LOG 207, LOG 208, LOG 210, LOG 213, LOG 215, LOG 217, LOG 220, LOG 221, LOG 224

VI. Lunch From 12:30 p.m. to 1:30 p.m.

VII. Assigned Proposed Change Review Continued

VIII. Public Comment Period—15 Minutes

IX. Wrap Up—DFO & AO

X. Adjourn

Tentative Agenda for Regulatory Enforcement Subcommittee Teleconference

Thursday, November 19, 2020—10 a.m. to 4 p.m. EDT

I. Call to Order—Subcommittee Chair & Designated Federal Officer (DFO) Roll Call—AO

II. Opening Remarks—Subcommittee Chair & DFO

III. Approval of Minutes From January 14, 2020 Regulatory Enforcement Subcommittee Meeting

IV. Public Comment Period—15 Minutes

V. Assigned Proposed Change Review

Proposed Changes Log:

- LOG 209, LOG 214, LOG 218

VI. Lunch From 12:30 p.m. to 1:30 p.m.

VII. Assigned Proposed Change Review Continued

VIII. Public Comment Period—15 Minutes

IX. Wrap Up—DFO & AO

X. Adjourn

Dana T. Wade,

Assistant Secretary for Housing, Federal Housing Commissioner.

[FR Doc. 2020–23562 Filed 10–23–20; 8:45 am]

BILLING CODE 4210–67–P

DEPARTMENT OF THE INTERIOR

Fish and Wildlife Service

[FWS–R1–ES–2020–N127; FXES11140100000–201–FF01E00000]

Proposed Habitat Conservation Plan and Draft Environmental Assessment for the Tumwater East Distribution Center and Tumwater West Conservation Site, Thurston County, Washington

AGENCY: Fish and Wildlife Service, Interior.

ACTION: Notice of availability; request for comments.

SUMMARY: We, the U.S. Fish and Wildlife Service, received an application from Puget Western, Incorporated, for an incidental take permit pursuant to the Endangered Species Act. The application includes a habitat conservation plan (HCP), which describes the actions the applicant will take to minimize and mitigate the impacts of the taking of the threatened Olympia subspecies of the Mazama pocket gopher that may occur incidental to the otherwise lawful commercial development of applicant-owned land in the City of Tumwater, Thurston County, Washington. We also announce the availability of a draft environmental assessment addressing the HCP and proposed permit. We invite comments from all interested parties.

DATES: To ensure consideration, please submit written comments by November 25, 2020.

ADDRESSES: To request further information or submit written comments, please use one of the following methods, and note that your information request or comments are in reference to ''Tumwater Distribution Center HCP'':

- *Internet:* You may view or download copies of the HCP and draft EA and obtain additional information at *http://www.fws.gov/wafwo/.*
- *Email: wfwocomments@fws.gov.* Include ''Tumwater Distribution Center HCP'' in the subject line of the message.
- *U.S. Mail:* Public Comments Processing, Attn: FWS–R1–ES–2020–N127; U.S. Fish and Wildlife Service; Washington Fish and Wildlife Office, 510 Desmond Drive SE, Suite 102, Lacey, WA 98503.

FOR FURTHER INFORMATION CONTACT: Tim Romanski, Conservation Planning and Hydropower Branch Manager, Washington Fish and Wildlife Office (see **ADDRESSES**); telephone: 360–753–5823. If you use a telecommunications device for the deaf, please call the Federal Relay Service at 800–877–8339.

SUPPLEMENTARY INFORMATION: We, the U.S. Fish and Wildlife Service (Service), received an application from Puget Western, Incorporated, including its wholly owned subsidiaries Tumwater West Conservation Site LLC, Tumwater East I–5 Distribution Center LLC, and Tumwater East I–5 Commercial LLC (applicant) for an incidental take permit (ITP) pursuant to section 10(a)(1)(B) of the Endangered Species Act of 1973, as amended (ESA; 16 U.S.C. 1531 *et seq.*). The applicant requests an ITP that would authorize ''take'' of the threatened Olympia subspecies of the Mazama pocket gopher (*Thomomys mazama pugetensis;* hereafter referred to as the Olympia pocket gopher) incidental to otherwise lawful commercial warehouse construction and associated infrastructure improvements for stormwater and transportation safety in Thurston County, Washington. The application includes a habitat conservation plan (HCP), which describes the actions the applicant will take to minimize and mitigate the impacts of the taking on the covered species. The Service also announces the availability of a draft environmental assessment (EA) addressing the HCP and proposed ITP. As the EA was developed prior to the Council on Environmental Quality's issuance of updated regulations implementing NEPA which went into effect on September 14, 2020 (40 CFR 1506.13), the EA was completed under the previous regulations in the interest of time and efficiency. We invite comments from all interested parties regarding the ITP application, including the HCP and draft EA.

Background

Section 9 of the ESA prohibits ''take'' of fish and wildlife species listed as endangered or threatened. Under the ESA, the term ''take'' means to harass, harm, pursue, hunt, shoot, wound, kill, trap, capture, or collect, or to attempt to engage in any such conduct (16 U.S.C. 1532(19)). The term ''harm,'' as defined in our regulations, includes significant habitat modification or degradation that results in death or injury to listed species by significantly impairing essential behavioral patterns, including breeding, feeding, or sheltering (50 CFR 17.3). The term ''harass'' is defined in our regulations as to carry out actions that create the likelihood of injury to listed species to such an extent as to significantly disrupt normal behavioral patterns, which include, but are not limited to, breeding, feeding, or sheltering (50 CFR 17.3).

Section 10(a)(1)(B) of the ESA contains provisions that authorize the

Service to issue permits to non-Federal entities for the take of endangered and threatened species caused by otherwise lawful activities, provided the following criteria are met: (1) The taking will be incidental; (2) the applicant will, to the maximum extent practicable, minimize and mitigate the impact of such taking; (3) the applicant will ensure that adequate funding for the plan will be provided; (4) the taking will not appreciably reduce the likelihood of the survival and recovery of the species in the wild; and (5) the applicant will carry out any other measures that the Service may require as being necessary or appropriate for the purposes of the HCP. Regulations governing permits for endangered and threatened species are found at 50 CFR 17.22 and 17.32, respectively.

Proposed Action

In this case, the applicant is requesting an ITP with a 20-year term that would authorize take of the Olympia pocket gopher incidental to otherwise lawful construction of commercial warehouse(s) and associated infrastructure improvements for stormwater and transportation safety. The application includes an HCP that describes the actions the applicant will take to minimize and mitigate the impacts of the taking on the covered species.

The applicant is proposing development activities and conservation site measures on approximately 151.2 acres of land. Development activities include construction of a warehouse distribution and commercial center and associated infrastructure improvements for stormwater and transportation safety. The area covered under the applicant's HCP consists of a project development site totaling 83.7 acres located southwest of the intersection of 93rd Ave. SW and Kimmie St. SW in the City of Tumwater, Thurston County, Washington. Portions of the approximately 79-acre project site and the 4.7 acres of adjacent roads are suitable for and/or occupied by the Olympia pocket gopher. Take of the Olympia pocket gopher would occur on approximately 22 acres of occupied habitat. Impacts to suitable habitat may result in additional impacts to Olympia pocket gopher if that habitat becomes occupied before construction. The applicant's HCP will provide offsetting mitigation for impacts to the Olympia pocket gopher at the 67.5-acre Tumwater West property. The Service proposes to issue the requested 20-year permit based on the applicant's commitment to implement the HCP, if permit issuance criteria are met.

National Environmental Policy Act Compliance

The proposed issuance of a permit is a Federal action that triggers the need for compliance with the National Environmental Policy Act of 1969, as amended (NEPA; 42 U.S.C. 4321 *et seq.*). Pursuant to the requirements of NEPA, we have prepared a draft EA to analyze the environmental impacts of a reasonable range of alternatives to the proposed Federal permit action. As the EA was developed prior to the Council on Environmental Quality's issuance of updated regulations implementing NEPA which went into effect on September 14, 2020 (40 CFR 1506.13), the EA was completed under the previous regulations in the interest of time and efficiency.

Alternatives analyzed in the EA include a no-action alternative and the proposed alternative. Under the no-action alternative, the proposed Federal action of issuing the permit would not proceed. Because there is no way to avoid all impacts to the listed species at the project site, the commercial development would not be constructed under the no-action alternative. The proposed alternative is implementation of the HCP and issuance of the requested 20-year permit, as described above.

Public Comments

You may submit your comments and materials by one of the methods listed in the **ADDRESSES** section. We specifically request information, views, and opinions from interested parties regarding our proposed Federal action, including on the adequacy of the HCP pursuant to the requirements for permits at 50 CFR parts 13 and 17 and the adequacy of the draft EA pursuant to the requirements of NEPA.

Public Availability of Comments

All comments and materials we receive become part of the public record associated with this action. Before including your address, phone number, email address, or other personally identifiable information in your comments, you should be aware that your entire comment—including your personally identifiable information—may be made publicly available at any time. While you can ask us in your comment to withhold your personally identifiable information from public review, we cannot guarantee that we will be able to do so. All submissions from organizations or businesses, and from individuals identifying themselves as representatives or officials of organizations or businesses, will be made available for public disclosure in their entirety.

Next Steps

After public review and completion of the EA, we will determine whether the proposed action warrants a finding of no significant impact or whether an environmental impact statement should be prepared. We will evaluate the permit application, associated documents, and any comments received, to determine whether the permit application meets the requirements of section 10(a)(1)(B) of the ESA. We will also evaluate whether issuance of the requested section 10(a)(1)(B) permit would comply with section 7 of the ESA by conducting an intra-Service section 7 consultation under section 7(a)(2) of the ESA on anticipated ITP actions. The final NEPA and permit determinations will not be completed until after the end of the 30-day comment period and will fully consider all comments received during the comment period. If we determine that all requirements are met, we will issue an incidental take permit under section 10(a)(1)(B) of the ESA to the applicant for the take of the covered species, incidental to otherwise lawful covered activities.

Authority

We provide this notice in accordance with the requirements of section 10 of the ESA (16 U.S.C. 1531 *et seq.*) and NEPA (42 U.S.C. 4321 *et seq.)* and their implementing regulations (50 CFR 17.22 and 40 CFR 1506.6, respectively).

Robyn Thorson,

Regional Director, U.S. Fish and Wildlife Service.

[FR Doc. 2020–23591 Filed 10–23–20; 8:45 am]

BILLING CODE 4333–15–P

DEPARTMENT OF JUSTICE

[OMB Number 1121–0360]

Agency Information Collection Activities; Proposed eCollection eComments Requested; Generic Clearance for Cognitive, Pilot, and Field Studies for Office of Juvenile Justice and Delinquency Prevention Data Collection Activities

AGENCY: Office of Justice Programs, Department of Justice.

ACTION: 30-Day notice of information collection under review.

SUMMARY: The Department of Justice (DOJ), Office of Justice Programs, Office of Juvenile Justice and Delinquency Prevention (OJJDP) will be submitting

the following information collection request to the Office of Management and Budget (OMB) for review and approval in accordance with the Paperwork Reduction Act of 1995. The proposed information collection is published to obtain comments from the public and affected agencies.

DATES: Comments are encouraged and will be accepted for 30 days until November 25, 2020.

ADDRESSES: Written comments and recommendations for the proposed information collection should be sent within 30 days of publication of this notice to *www.reginfo.gov/public/do/PRAMain.* Find this particular information collection by selecting ''Currently under 30-day Review—Open for Public Comments'' or by using the search function.

SUPPLEMENTARY INFORMATION: This process is conducted in accordance with 5 CFR 1320.10. Written comments and suggestions from the public and affected agencies concerning the proposed collection of information are encouraged. Your comments should address one or more of the following four points:

—Evaluate whether the proposed collection of information is necessary for the proper performance of the functions of the agency, including whether the information will have practical utility;
—Evaluate the accuracy of the agency's estimate of the burden of the proposed collection of information, including the validity of the methodology and assumptions used;
—Evaluate whether and if so how the quality, utility, and clarity of the information to be collected can be enhanced; and
—Minimize the burden of the collection of information on those who are to respond, including through the use of appropriate automated, electronic, mechanical, or other technological collection techniques or other forms of information technology, *e.g.,* permitting electronic submission of responses.

Overview of this Information Collection

1. *Type of Information Collection:* Extension.

2. *The Title of the Form/Collection:* Generic clearance for cognitive, pilot, and field studies for Office of Juvenile Justice and Delinquency Prevention data collection activities.

3. *The agency form number, if any, and the applicable component of the Department sponsoring the collection:* The form number is CJ–14, Office of Juvenile Justice and Delinquency Prevention, United States Department of Justice.

4. *Affected public who will be asked or required to respond, as well as a brief abstract:* The proposed information collection activity will enable OJJDP to develop, test, and improve its survey and data collection instruments and methodologies. OJJDP will engage in cognitive, pilot, and field test activities to inform its data collection efforts and to minimize respondent burden associated with each new or modified data collection. OJJDP anticipates using a variety of procedures including, but not limited to, tests of various types of survey and data collection operations, focus groups, cognitive laboratory activities, pilot testing, field testing, exploratory interviews, experiments with questionnaire design, and usability testing of electronic data collection instruments.

Following standard Office of Management and Budget (OMB) requirements, OJJDP will submit an individual request to OMB for every group of data collection activities undertaken under this generic clearance. OJJDP will provide OMB with a copy of the individual instruments or questionnaires (if one is used), as well as other materials describing the project. Currently, OJJDP anticipates the need to conduct testing and development work that will include the collection of information from law enforcement agencies, child welfare agencies, courts, probation supervision offices, and the state agencies, local governments, non-profit organizations, and for-profit organizations that operate juvenile residential placement facilities.

5. *An estimate of the total number of respondents and the amount of time estimated for an average respondent to respond:* It is estimated that approximately 2,500 respondents will be involved in the anticipated cognitive, pilot, and field testing work over the 3-year clearance period. Specific estimates for the average response time are not known for development work covered under a generic clearance. Estimates of overall burden are included in item 6 below.

6. *An estimate of the total public burden (in hours) associated with the collection:* The estimated public burden for identified and future projects covered under this generic clearance over the 3-year clearance period is approximately 5,000 hours.

If additional information is required contact: Melody Braswell, Department Clearance Officer, United States Department of Justice, Justice Management Division, Policy and Planning Staff, Two Constitution Square, 145 N Street NE, 3E.405A, Washington, DC 20530.

Dated: October 20, 2020.

Melody Braswell,

Department Clearance Officer for PRA, U.S. Department of Justice.

[FR Doc. 2020–23565 Filed 10–23–20; 8:45 am]

BILLING CODE 4410–18–P

DEPARTMENT OF JUSTICE

[OMB Number: 1121–0220]

Agency Information Collection Activities; Proposed eCollection eComments Requested; Extension Without Change, of a Previously Approved Collection

AGENCY: Office of Justice Programs, Department of Justice.

ACTION: 30 Day notice.

SUMMARY: The Department of Justice, Office of Justice Programs, Bureau of Justice Assistance is submitting the following information collection request to the Office of Management and Budget (OMB) for review and approval in accordance with the Paperwork Reduction Act of 1995.

DATES: The Department of Justice encourages public comment and will accept input until November 25, 2020.

ADDRESSES: Written comments and recommendations for the proposed information collection should be sent within 30 days of publication of this notice to *www.reginfo.gov/public/do/PRAMain.* Find this particular information collection by selecting ''Currently under 30-day Review—Open for Public Comments'' or by using the search function.

SUPPLEMENTARY INFORMATION: Written comments and suggestions from the public and affected agencies concerning the proposed collection of information are encouraged. Your comments should address one or more of the following four points:

—Evaluate whether the proposed collection of information is necessary for the proper performance of the functions of the Bureau of Justice Assistance, including whether the information will have practical utility;
—Evaluate the accuracy of the agency's estimate of the burden of the proposed collection of information, including the validity of the methodology and assumptions used;
—Evaluate whether and if so how the quality, utility, and clarity of the information to be collected can be enhanced; and
—Minimize the burden of the collection of information on those who are to

respond, including through the use of appropriate automated, electronic, mechanical, or other technological collection techniques or other forms of information technology, *e.g.,* permitting electronic submission of responses.

Overview of this information collection:

1. *Type of Information Collection:* Extension, without change, of a currently approved collection.

2. *The Title of the Form/Collection:* Public Safety Officers' Benefits (PSOB) Program Applications Package (including currently approved collections: Public Safety Officers' Death Benefits Applications (1121–0024 and 1121–0025), Public Safety Officers' Disability Benefits Application (1121–0166), Public Safety Officers' Educational Assistance Application (1121–0220), and a new form titled: Public Safety Officers' Appeal Request Application).

3. *The agency form number, if any, and the applicable component of the Department sponsoring the collection:* None. The application for this program can be accessed online at: *https://psob.bja.ojp.gov/.* The Bureau of Justice Assistance, in the Office of Justice Programs serves as the hosting component.

4. *Affected public who will be asked or required to respond, as well as a brief abstract:* Public Safety Officers who were permanently and totally disabled in the line of duty; eligible survivors of Public Safety Officers who were killed in the line of duty; eligible spouses and children who receive PSOB death benefits, or whose spouse or parent received the PSOB disability benefit.

Abstract: BJA's Public Safety Officers' Benefits (PSOB) Office will use the Public Safety Officers' Benefits Program Applications Package (including: The Public Safety Officers' Death Benefits Application, the Public Safety Officers' Disability Benefits Application, the Public Safety Officers' Educational Assistance Application, the Public Safety Officers' Appeal Request Application) to collect and confirm the following:

• *Public Safety Officer Death Benefits Application:* BJA's Public Safety Officers' Benefits (PSOB) Office will use the Public Safety Officer Death Benefits Application information to confirm the eligibility of applicants to receive Public Safety Officers' Death Benefits. Eligibility is dependent on several factors, including Public Safety Officer status, an injury sustained in the line of duty, and the claimant status in the beneficiary hierarchy according to the PSOB Act. In addition, information to help the PSOB Office identify an individual is collected, such as a Social Security number for the Public Safety Officer, telephone numbers, and email addresses.

• *Public Safety Officer Disability Benefits Application:* BJA's Public Safety Officers' Benefits (PSOB) Office will use the PSOB Disability Application information to confirm the eligibility of applicants to receive Public Safety Officers' Disability Benefits. Eligibility is dependent on several factors, including Public Safety Officer status, injury sustained in the line of duty, and the total and permanent nature of the line of duty injury. In addition, information to help the PSOB Office identify individuals is collected, such as Social Security number for the Public Safety Officer, telephone numbers, and email addresses.

• *Public Safety Officer Educational Assistance Application:* BJA's Public Safety Officers' Benefits (PSOB) Office will use the Public Safety Officer Educational Assistance Application information to confirm the eligibility of applicants to receive Public Safety Officer Educational Assistance benefits. Eligibility is dependent on several factors, including the applicant having received or being eligible to receive a portion of the PSOB Death Benefit, or having a spouse or parent who received the PSOB Disability Benefit. Also considered are the applicant's age and the schools being attended. In addition, information to help BJA identify an individual is collected, such as contact numbers and email addresses.

• *Public Safety Officer Appeal Request Application:* BJA's Public Safety Officers' Benefits (PSOB) Office will use the Public Safety Officer Appeal Request Application information to confirm the eligibility of applicants who wish to appeal a previous Public Safety Officers' Death and Disability Benefit determination. Changes to the report form have been made in an effort to streamline the application process and eliminate requests for information that are either irrelevant or already being collected by other means.

5. *An estimate of the total number of respondents and the amount of time estimated for an average respondent to respond:*

• *Public Safety Officer Death Benefits Application:* An estimate of the total number of respondents and the amount of time needed for an average respondent to respond is as follows: It is estimated that no more than 350 respondents will apply a year. Each application takes approximately 360 minutes to complete.

• *Public Safety Officer Disability Benefits Application:* An estimate of the total number of respondents and the amount of time needed for an average respondent to respond is as follows: It is estimated that no more than 100 respondents will apply a year. Each application takes approximately 300 minutes to complete.

• *Public Safety Officer Educational Assistance Application:* It is estimated that no more than 200 respondents will apply a year. Each application takes approximately 30 minutes to complete.

• *Public Safety Officer Appeal Request Application:* It is estimated that no more than 75 respondents will apply a year. Each application takes approximately 30 minutes to complete.

6. *An estimate of the total public burden (in hours) associated with the collection:*

• *Public Safety Officer Death Benefits Application:* An estimate of the total public burden (in hours) associated with the collection: Total Annual Reporting Burden: 350 × 360 minutes per application = 126,000 minutes/by 60 minutes per hour = 2,100 hours.

• *Public Safety Officer Disability Benefits Application:* An estimate of the total public burden (in hours) associated with the collection: Total Annual Reporting Burden: 100 × 300 minutes per application = 30,000 minutes/by 60 minutes per hour = 500 hours.

• *Public Safety Officer Educational Assistance Application:* The estimated public burden associated with this collection is 100 hours. It is estimated that respondents will take 30 minutes to complete an application. The burden hours for collecting respondent data sum to 100 hours (200 respondents × 0.5 hours = 100 hours).

• *Public Safety Officer Appeal Request Application:* An estimate of the total public burden (in hours) associated with the collection: Total Annual Reporting Burden: 75 × 30 minutes per application = 2,250 minutes/by 60 minutes per hour = 37.5 hours.

If additional information is required contact: Melody Braswell, Department Clearance Officer, United States Department of Justice, Justice Management Division, Policy and Planning Staff, Two Constitution Square, 145 N Street NE, 3E.405A, Washington, DC 20530.

Dated: October 20, 2020.

Melody Braswell,

Department Clearance Officer for PRA, U.S. Department of Justice.

[FR Doc. 2020–23563 Filed 10–23–20; 8:45 am]

BILLING CODE 4410–18–P

DEPARTMENT OF LABOR

Employment and Training Administration

Notice of Determinations Regarding Eligibility To Apply for Trade Adjustment Assistance

In accordance with the Section 223 (19 U.S.C. 2273) of the Trade Act of 1974 (19 U.S.C. 2271, *et seq.*) (''Act''), as amended, the Department of Labor herein presents summaries of determinations regarding eligibility to apply for trade adjustment assistance under Chapter 2 of the Act (''TAA'') for workers by (TA–W) number issued during the period of *September 1, 2020 through September 30, 2020.* (This Notice primarily follows the language of the Trade Act. In some places however, changes such as the inclusion of subheadings, a reorganization of language, or ''and,'' ''or,'' or other words are added for clarification.)

Section 222(a)—Workers of a Primary Firm

In order for an affirmative determination to be made for workers of a primary firm and a certification issued regarding eligibility to apply for TAA, the group eligibility requirements under Section 222(a) of the Act (19 U.S.C. 2272(a)) must be met, as follows:

(1) The first criterion (set forth in Section 222(a)(1) of the Act, 19 U.S.C. 2272(a)(1)) is that a significant number or proportion of the workers in such workers' firm (or ''such firm'') have become totally or partially separated, or are threatened to become totally or partially separated; AND (2(A) or 2(B) below)

(2) The second criterion (set forth in Section 222(a)(2) of the Act, 19 U.S.C. 2272(a)(2)) may be satisfied by either (A) the Increased Imports Path, or (B) the Shift in Production or Services to a Foreign Country Path/Acquisition of Articles or Services from a Foreign Country Path, as follows:

(A) Increased Imports Path

(i) the sales or production, or both, of such firm, have decreased absolutely;

AND (ii and iii below)

(ii) (I) imports of articles or services like or directly competitive with articles produced or services supplied by such firm have increased; OR

(II)(aa) imports of articles like or directly competitive with articles into which one or more component parts produced by such firm are directly incorporated, have increased; OR

(II)(bb) imports of articles like or directly competitive with articles which are produced directly using the services supplied by such firm, have increased; OR

(III) imports of articles directly incorporating one or more component parts produced outside the United States that are like or directly competitive with imports of articles incorporating one or more component parts produced by such firm have increased; AND

(iii) the increase in imports described in clause (ii) contributed importantly to such workers' separation or threat of separation and to the decline in the sales or production of such firm; OR

(B) Shift in Production or Services to a Foreign Country Path OR Acquisition of Articles or Services From a Foreign Country Path

(i) (I) there has been a shift by such workers' firm to a foreign country in the production of articles or the supply of services like or directly competitive with articles which are produced or services which are supplied by such firm; OR

(II) such workers' firm has acquired from a foreign country articles or services that are like or directly competitive with articles which are produced or services which are supplied by such firm; AND

(ii) the shift described in clause (i)(I) or the acquisition of articles or services described in clause (i)(II) contributed importantly to such workers' separation or threat of separation.

Section 222(b)—Adversely Affected Secondary Workers

In order for an affirmative determination to be made for adversely affected secondary workers of a firm and a certification issued regarding eligibility to apply for TAA, the group eligibility requirements of Section 222(b) of the Act (19 U.S.C. 2272(b)) must be met, as follows:

(1) a significant number or proportion of the workers in the workers' firm or an appropriate subdivision of the firm have become totally or partially separated, or are threatened to become totally or partially separated; AND

(2) the workers' firm is a supplier or downstream producer to a firm that employed a group of workers who received a certification of eligibility under Section 222(a) of the Act (19 U.S.C. 2272(a)), and such supply or production is related to the article or service that was the basis for such certification (as defined in subsection 222(c)(3) and (4) of the Act (19 U.S.C. 2272(c)(3) and (4));

(3) either—

(A) the workers' firm is a supplier and the component parts it supplied to the firm described in paragraph (2) accounted for at least 20 percent of the production or sales of the workers' firm; OR

(B) a loss of business by the workers' firm with the firm described in paragraph (2) contributed importantly to the workers' separation or threat of separation determined under paragraph (1).

Section 222(e)—Firms Identified by the International Trade Commission

In order for an affirmative determination to be made for adversely affected workers in firms identified by the International Trade Commission and a certification issued regarding eligibility to apply for TAA, the group eligibility requirements of Section 222(e) of the Act (19 U.S.C. 2272(e)) must be met, by following criteria (1), (2), and (3) as follows:

(1) The workers' firm is publicly identified by name by the International Trade Commission as a member of a domestic industry in an investigation resulting in—

(A) an affirmative determination of serious injury or threat thereof under section 202(b)(1) of the Act (19 U.S.C. 2252(b)(1)); OR

(B) an affirmative determination of market disruption or threat thereof under section 421(b)(1) of the Act (19 U.S.C. 2436(b)(1)); OR

(C) an affirmative final determination of material injury or threat thereof under section 705(b)(1)(A) or 735(b)(1)(A) of the Tariff Act of 1930 (19 U.S.C. 1671d(b)(1)(A) and 1673d(b)(1)(A)); AND

(2) the petition is filed during the 1-year period beginning on the date on which—

(A) a summary of the report submitted to the President by the International Trade Commission under section 202(f)(1) of the Trade Act (19 U.S.C. 2252(f)(1)) with respect to the affirmative determination described in paragraph (1)(A) is published in the **Federal Register** under section 202(f)(3) (19 U.S.C. 2252(f)(3)); OR

(B) notice of an affirmative determination described in subparagraph (B) or (C) of paragraph (1) is published in the **Federal Register**; AND

(3) the workers have become totally or partially separated from the workers' firm within—

(A) the 1-year period described in paragraph (2); OR

(B) notwithstanding section 223(b) of the Act (19 U.S.C. 2273(b)), the 1-year period preceding the 1-year period described in paragraph (2).

Affirmative Determinations for Trade Adjustment Assistance

The following certifications have been issued. The date following the company name and location of each determination references the impact date for all workers of such determination.

The following certifications have been issued. The requirements of Section 222(a)(2)(A) (Increased Imports Path) of the Trade Act have been met.

TA–W No.	Subject firm	Location	Impact date
95,395	API Heat Transfer, Adecco Staffing	Arcade, NY	November 15, 2018.
95,423	MNSTAR Technologies Inc	Grand Rapids, MN	November 25, 2018.
95,441	Mitchel and Scott Machine Company, The Mitchel Group, Inc., National Construction Workforce.	Indianapolis, IN	December 3, 2018.
95,441A	Tennessee Screw Machine Company, The Mitchel Group, Inc	McMinnville, TN	December 3, 2018.
95,708	Erie Coke Corporation, Garner LLC, Spresters Industrial Services, Kirchner LLC.	Erie, PA	February 19, 2019.
95,725	Knape & Vogt Manufacturing Company	Grand Rapids, MI	February 19, 2019.
96,052	Hoya Optical Labs of America, Inc., Safety Rx, Hoya Holding, Hoya, Hire Thinking, Advantage PO, Elwood Staffing.	Plymouth, IN	July 13, 2019.
96,100	Verso Wisconsin Rapids Paper Mill	Wisconsin Rapids, WI	July 24, 2019.
96,110	Titanium Metals Corporation (TIMET), Precision Castparts Corporation, Aerotek, AppleOne, Manpower.	Henderson, NV	July 21, 2019.

The following certifications have been issued. The requirements of Section 222(a)(2)(B) (Shift in Production or Services to a Foreign Country Path or Acquisition of Articles or Services from a Foreign Country Path) of the Trade Act have been met.

TA–W number	Subject firm	Location	Impact date
94,781	Infocus Corporation, Image Holdings Corporation, Target C.W., Aerotek.	Portland, OR	May 3, 2018.
95,157	California Physicians Service, Blue Shield of California	Lodi, CA	September 4, 2018.
95,236	Faurecia Automotive Seating, LLC, North America Seating Division, Belflex.	Cleveland, MS	September 30, 2018.
95,280	Haldex Brake Products Corporation, Onin Staffing, Kelly Services, TMS Inc., and Pro Electric LC.	Kansas City, MO	October 11, 2018.
95,354	Goldman Sachs & Co. LLC, Engineering Division, The Goldman Sachs Group, Inc.	New York, NY	November 5, 2018.
95,357	Simonds Saw LLC	Fitchburg, MA	November 5, 2018.
95,364	Aspect	Phoenix, AZ	November 7, 2018.
95,366	Distinctive Apparel International (DAI)	Randolph, MA	November 8, 2018.
95,412	Bluestem Brands Inc., Northstar Portfolio Division, Customer Service Call Center.	Saint Cloud, MN	November 22, 2018.
95,434	HCL America Inc., Digital Process Operations, Engineering, Research and Development Services.	Bolingbrook, IL	November 12, 2018.
95,439	Citibank, N.A., Global Consumer Technology-NAM Application Development, etc.	Irving, TX	December 3, 2018.
95,471	Pancon Corporation, HW Staffing, Monroe Staffing	East Taunton, MA	December 11, 2018.
95,471A	Pancon Corporation, Partners Personnel, Apple One	Temecula, CA	December 11, 2018.
95,537	State Street Bank & Trust Co., Client Delivery Management, Global Delivery, Global Operations, etc.	Irvine, CA	January 6, 2019.
95,537A	State Street Bank & Trust Co., Client Delivery Management, Global Delivery, Global Operations, etc.	Sacramento, CA	January 6, 2019.
95,537B	State Street Bank & Trust Co., Client Delivery Management, Global Delivery, Global Operations, etc.	Atlanta, GA	January 6, 2019.
95,537C	State Street Bank & Trust Co., Client Delivery Management, Global Delivery, Global Operations, etc.	North Quincy, MA	January 6, 2019.
95,537D	State Street Bank & Trust Co., Client Delivery Management, Global Delivery, Global Operations, etc.	Boston, MA	January 6, 2019.
95,537E	State Street Bank & Trust Co., Client Delivery Management, Global Delivery, Global Operations, etc.	Quincy, MA	January 6, 2019.
95,537F	State Street Bank & Trust Co., Client Delivery Management, Global Delivery, Global Operations, etc.	Boston, MA	January 6, 2019.
95,537G	State Street Bank & Trust Co., Client Delivery Management, Global Delivery, Global Operations, etc.	North Quincy, MA	January 6, 2019.
95,537H	State Street Bank & Trust Co., Client Delivery Management, Global Delivery, Global Operations, etc.	North Quincy, MA	January 6, 2019.
95,537I	State Street Bank & Trust Co., Client Delivery Management, Global Delivery, Global Operations, etc.	Boston, MA	January 6, 2019.
95,537J	State Street Bank & Trust Co., Client Delivery Management, Global Delivery, Global Operations, etc.	Kansas City, MO	January 6, 2019.
95,537K	State Street Bank & Trust Co., Client Delivery Management, Global Delivery, Global Operations, etc.	Kansas City, MO	January 6, 2019.

TA–W number	Subject firm	Location	Impact date
95,537L	State Street Bank & Trust Co., Client Delivery Management, Global Delivery, Global Operations, etc.	Atlanta, GA	January 6, 2019.
95,537M	State Street Bank & Trust Co., Client Delivery Management, Global Delivery, Global Operations, etc.	Clifton, NJ	January 6, 2019.
95,537N	State Street Bank & Trust Co., Client Delivery Management, Global Delivery, Global Operations, etc.	Princeton, NJ	January 6, 2019.
95,537O	State Street Bank & Trust Co., Client Delivery Management, Global Delivery, Global Operations, etc.	New York, NY	January 6, 2019.
95,537P	State Street Bank & Trust Co., Client Delivery Management, Global Delivery, Global Operations, etc.	New York, NY	January 6, 2019.
95,537Q	State Street Bank & Trust Co., Client Delivery Management, Global Delivery, Global Operations, etc.	New York, NY	January 6, 2019.
95,537R	State Street Bank & Trust Co., Client Delivery Management, Global Delivery, Global Operations, etc.	Berwyn, PA	January 6, 2019.
95,678	Alight Solutions LLC, Tempo Acquisition, Accenture, Jones Lang LaSalle Americas, PWC LLP, etc.	Lincolnshire, IL	February 10, 2019.
95,683	Samsung Austin Semiconductor, LLC, SARC CPU, Samsung Semiconductor, Secure Talent, etc.	Austin, TX	February 11, 2019.
95,732	State Street Bank & Trust Co., Enterprise Recons, State Street Corp., Daley & Associates LLC, Kforce, etc.	Quincy, MA	February 25, 2019.
95,806	United Steel, Inc., Aerotek, Robert Half	East Hartford, CT	March 10, 2019.
95,850	Hotelbeds USA, Inc., Hotel Operations Group	Orlando, FL	March 25, 2019.
95,948	U.S. TelePacific Corporation, TPx Communications, Mpower Communications, Mpower Holdings, etc.	Saint Louis, MO	May 28, 2019.
95,973	Dell Technologies Inc., Remote Delivery Engineers (ProDeploy)	Round Rock, TX	June 8, 2019.
95,984	Computer Operations Technology Solution Design and Sectors, Global Technology Services Division, IBM.	Armonk, NY	June 11, 2019.
95,998	Sonova USA, Inc., Sonova United States Hearing Instruments, LLC, Aerotek.	Plymouth, MN	February 29, 2020.
95,998A	Robert Half, Sonova USA, Inc., Sonova United States Hearing Instruments, LLC.	Plymouth, MN	June 17, 2019.
96,016	Dal-Tile Corporation, Mohawk Industries, Peoplemark, Express Employment Services, O&C Services.	Lewisport, KY	June 26, 2019.
96,018	Lee Hecht Harrison, The Adecco Group, Accounting Principals, Modis.	Maitland, FL	June 10, 2019.
96,027	Web.com Group, Inc., Call Center, Siris Capital Group, LLC	Drums, PA	July 1, 2019.
96,036	Treasury Wine Estates, Americas Company, Support Services, Bolt, Zorang, Robert Half, Nelson, Eurest Services, etc.	Napa, CA	July 1, 2019.
96,041	Advance Auto Business Support LLC, Accounting Department, Advance Stores Company, Inc., Greene Resources.	Roanoke, VA	July 7, 2019.
96,051	GHD Services Inc., Finance Department, GHD Holdings U.S. LLC, GHD Group Limited, Adecco.	Niagara Falls, NY	July 10, 2019.
96,068	Halliburton Energy Services, Inc., Procurement and Logistics, a subsidiary of Halliburton Company.	Duncan, OK	July 17, 2019.
96,076	Watlow Electric Manufacturing Company, Express Employment Professionals.	Richmond, IL	July 21, 2019.
96,094	BASF Erie, Catalysts Division, BASF, BCforward, Computech, Hunter International, etc.	Erie, PA	July 23, 2019.
96,117	Secure Contact Solutions, LLC, Vesta Corporation, Express Services	Alpharetta, GA	July 31, 2019.
96,139	Waupaca Foundry, Inc., Hitachi Metals America, Ltd., Express Employment Professionals.	Lawrenceville, PA	August 12, 2019.
96,140	Maxion Wheels Akron LLC, Maxion Wheels USA LLC	Akron, OH	August 13, 2019.
96,149	Titanium Metals Corporation (TIMET), Precision Castparts Corporation, Manpower.	Toronto, OH	August 17, 2019.
96,152	Comcast Technology Solutions, LLC, Content and Streaming Provider Solutions, Comcast Cable Communications, etc.	Seattle, WA	August 18, 2019.
96,156	Rassini Chassis Systems LLC, Rassini International	Montpelier, OH	August 21, 2019.
96,159	QIAGEN Sciences LLC	Frederick, MD	August 25, 2019.
96,190	Nordson Medical, Medical, Nordson, Adecco Staffing, CoWorx Staffing, etc.	Marlborough, MA	September 3, 2019.

The following certifications have been issued. The requirements of Section 222(b) (supplier to a firm whose workers are certified eligible to apply for TAA) of the Trade Act have been met.

TA–W No.	Subject firm	Location	Impact date
96,054	Constellium Rolled Products Ravenswood LLC, A&T Division, Constellium SE, Plexus Scientific Corporation.	Ravenswood, WV	July 13, 2019.

TA–W No.	Subject firm	Location	Impact date
96,056	Spirit Aerosystems Inc., APC Workforce Solutions LLC, Workforce Logiq, ZeroChaos, Acro Service, etc.	Tulsa, OK	July 13, 2019.
96,056A	Spirit Aerosystems Inc., APC Workforce Solutions LLC, Workforce Logiq, ZeroChaos, Acro Service, etc.	McAlester, OK	July 13, 2019.
96,089	Valent Aerostructures, LMI Aerospace	Fredonia, KS	July 23, 2019.
96,131	Mid Continent Controls, Inc.	Derby, KS	August 10, 2019.
96,133	Toray Composite Materials America, Inc., Toray Industries America, Inc	Tacoma, WA	August 8, 2019.
96,155	Heroux Devtek, Inc., APPH Wichita, Inc. Division, Heroux Corporation, The Arnold Group.	Wichita, KS	August 24, 2019.
96,178	Clearwater Engineering, Inc	Derby, KS	September 3, 2019.

The following certifications have been issued. The requirements of Section 222(e) (firms identified by the International Trade Commission) of the Trade Act have been met.

TA–W No.	Subject firm	Location	Impact date
95,185	Carrara Stone Systems of Chicago, LLC, Stone Systems of Chicago, TRS Staffing Solutions, Flextek Resources, etc.	Mundelein, IL	July 5, 2018.
95,990	ACProducts, Inc. dba Cabinetworks Group, Peoplelink Staffing	Culver, IN	April 17, 2019.
96,013	Pacific	Cheriton, VA	December 12, 2018.
96,023	Pratt + Larson Ceramics	Portland, OR	May 28, 2019.
96,079	Cambria Company LLC, Cambria Fabshop Minnesota LLC	Belle Plaine, MN	June 19, 2019.
96,079A	Cambria Company LLC	Le Sueur, MN	July 6, 2020.

Negative Determinations for Worker Adjustment Assistance

In the following cases, the investigation revealed that the eligibility criteria for TAA have not been met for the reasons specified.

The investigation revealed that the requirements of Trade Act section 222 (a)(1) and (b)(1) (significant worker total/partial separation or threat of total/partial separation), or (e) (firms identified by the International Trade Commission), have not been met.

TA–W No.	Subject firm	Location	Impact date
96,150	United States Steel Corporation, Annandale Archive Division, United States Steel Corporation.	Boyers, PA.	

The investigation revealed that the criteria under paragraphs (a)(2)(A)(i) (decline in sales or production, or both), or (a)(2)(B) (shift in production or services to a foreign country or acquisition of articles or services from a foreign country), (b)(2) (supplier to a firm whose workers are certified eligible to apply for TAA or downstream producer to a firm whose workers are certified eligible to apply for TAA), and (e) (International Trade Commission) of section 222 have not been met.

TA–W No.	Subject firm	Location	Impact date
95,510	Fiserv, Inc., Payments and Industry Products, Randstad Sourceright, Fiserv Solutions.	Beaverton, OR.	

The investigation revealed that the criteria under paragraphs(a)(2)(A) (increased imports), (a)(2)(B) (shift in production or services to a foreign country or acquisition of articles or services from a foreign country), (b)(2) (supplier to a firm whose workers are certified eligible to apply for TAA or downstream producer to a firm whose workers are certified eligible to apply for TAA), and (e) (International Trade Commission) of section 222 have not been met.

TA–W No.	Subject firm	Location	Impact date
94,958	Atos IT Solutions and Services, Inc.	Clovis, NM.	
95,047	Atos It Solutions and Services, Inc., IT Operations and Application Support Division.	Webster, NY.	
95,219	Wisconsin Label Corporation, WS Packaging Group Inc., Multi-Color Corporation, Kelly Services.	Rochester, NY.	
95,228	Meryl Diamond Ltd	New York, NY.	
95,267	Calaway Trading Inc	Saint Helens, OR.	
95,404	Shiru Cafe, Enrisson Inc	Amherst, MA.	
95,428	Acumed LLC, Colson Medical, Campus Point, Beacon, Robert Half, Terra Staffing, Oxford.	Hillsboro, OR.	

TA–W No.	Subject firm	Location	Impact date
95,463	STORServer, Inc	Colorado Springs, CO.	
95,595	Full Circle Recycling LLC, American Labor Services	Johnston, RI.	
95,773	HKT Teleservices (US), Inc., Celebrity Staff, Express Employment Professionals.	Lincoln, NE.	
96,099	Adidas Indy LLC, Distribution Center, Reebok International, MSIL Staffing and Packaging, etc.	Indianapolis, IN.	

Determinations Terminating Investigations of Petitions for Trade Adjustment Assistance

After notice of the petitions was published in the **Federal Register** and on the Department's website, as required by Section 221 of the Act (19 U.S.C.2271), the Department initiated investigations of these petitions.

The following determinations terminating investigations were issued because the worker group on whose behalf the petition was filed is covered under an existing certification.

TA–W No.	Subject firm	Location	Impact date
96,000	IBM, Jones Lang LaSalle Incorporated (JLL), Allied Universal Security Systems, Thomson Reuters.	Rochester, NY.	

I hereby certify that the aforementioned determinations were issued during the period of *September 1, 2020 through September 30, 2020.* These determinations are available on the Department's website *https://www.doleta.gov/tradeact/petitioners/taa_search_form.cfm* under the searchable listing determinations or by calling the Office of Trade Adjustment Assistance toll free at 888–365–6822.

Signed at Washington, DC, this 8th day of October 2020.

Hope D. Kinglock,

Certifying Officer, Office of Trade Adjustment Assistance.

[FR Doc. 2020–23622 Filed 10–23–20; 8:45 am]

BILLING CODE 4510–FN–P

DEPARTMENT OF LABOR

Employment and Training Administration

Investigations Regarding Eligibility To Apply for Worker Adjustment Assistance

Petitions have been filed with the Secretary of Labor under Section 221(a) of the Trade Act of 1974 (''the Act'') and are identified in the Appendix to this notice. Upon receipt of these petitions, the Administrator of the Office of Trade Adjustment Assistance, Employment and Training Administration, has instituted investigations pursuant to Section 221(a) of the Act.

The purpose of each of the investigations is to determine whether the workers are eligible to apply for adjustment assistance under Title II, Chapter 2, of the Act. The investigations will further relate, as appropriate, to the determination of the date on which total or partial separations began or threatened to begin and the subdivision of the firm involved.

The petitioners or any other persons showing a substantial interest in the subject matter of the investigations may request a public hearing provided such request is filed in writing with the Administrator, Office of Trade Adjustment Assistance, at the address shown below, no later than November 5, 2020.

Interested persons are invited to submit written comments regarding the subject matter of the investigations to the Administrator, Office of Trade Adjustment Assistance, at the address shown below, not later than November 5, 2020.

The petitions filed in this case are available for inspection at the Office of the Administrator, Office of Trade Adjustment Assistance, Employment and Training Administration, U.S. Department of Labor, Room N–5428, 200 Constitution Avenue NW, Washington, DC 20210.

Signed at Washington, DC this 8th day of October 2020.

Hope D. Kinglock,

Certifying Officer, Office of Trade Adjustment Assistance.

Appendix

52 TAA Petitions Instituted Between 9/1/20 and 9/30/20

TA–W	Subject firm (petitioners)	Location	Date of institution	Date of petition
96167	AeroTech Engineering, Inc. (State/One-Stop)	Wichita, KS	09/01/20	08/31/20
96168	Morgan Advanced Ceramics, Inc. (Workers)	Latrobe, PA	09/01/20	08/31/20
96169	Premier Processing (State/One-Stop)	Wichita, KS	09/01/20	08/31/20
96170	Streater LLC (State/One-Stop)	Albert Lea, MN	09/01/20	08/31/20
96171	Textron Aviation Inc. (State/One-Stop)	Independence, KS	09/01/20	08/31/20
96172	Wieland Copper Products, LLC (Company)	Pine Hall, NC	09/01/20	08/31/20
96173	Respironics Novametrix, LLC (State/One-Stop)	Wallingford, CT	09/02/20	09/01/20
96174	Schweitzer-Mauduit International, Inc. (Company)	Spotswood, NJ	09/02/20	09/01/20
96175	Exterran Energy Solutions (State/One-Stop)	Houston, TX	09/03/20	09/02/20
96176	Safran Cabin Sterling, Inc. (State/One-Stop)	Sterling, VA	09/03/20	09/02/20
96177	Supreme Steel (Union)	Portland, OR	09/03/20	09/02/20
96178	Clearwater Engineering, Inc. (State/One-Stop)	Derby, KS	09/04/20	09/03/20

52 TAA PETITIONS INSTITUTED BETWEEN 9/1/20 AND 9/30/20—Continued

TA–W	Subject firm (petitioners)	Location	Date of institution	Date of petition
96179	HP Inc., (State/One-Stop)	Vancouver, WA	09/04/20	09/02/20
96180	MAX Aerostructures (State/One-Stop)	Wichita, KS	09/04/20	09/03/20
96181	Applied Engineering & The Freeman Company (State/One-Stop)	Yankton, SD	09/08/20	09/04/20
96182	WABTEC—GE Transportation Division (State/One-Stop)	Erie, PA	09/08/20	09/04/20
96183	W & D North America (State/One-Stop)	Duncansville, PA	09/09/20	09/09/20
96184	Emblem Health (State/One-Stop)	Albany, NY	09/11/20	09/10/20
96185	Emblem Health (State/One-Stop)	Melville, NY	09/11/20	09/10/20
96186	Klean Karpet (Workers)	Atlanta, GA	09/14/20	09/12/20
96187	Korn Ferry (State/One-Stop)	Chicago, IL	09/14/20	09/10/20
96188	Nexans Energy USA Inc. (State/One-Stop)	Middletown & Chester (2 locations), NY.	09/14/20	09/11/20
96189	LMI Incorporated (State/One-Stop)	St. Charles, MO	09/15/20	09/14/20
96190	Nordson Medical (State/One-Stop)	Marlborough, MA	09/15/20	09/03/20
96191	Roche Operations Ltd (Company)	Ponce, PR	09/15/20	09/14/20
96192	WS Packaging—MCC Multi Color Corporation (State/One-Stop)	Franklin, PA	09/15/20	09/14/20
96193	Bank of New York Mellon (BNYMellon) (State/One-Stop)	Pittsburgh, PA	09/16/20	09/04/20
96194	Carl Zeiss Meditec Inc. (State/One-Stop)	Dublin, CA	09/16/20	09/15/20
96195	Siemens Gamesa (State/One-Stop)	Fort Madison, IA	09/16/20	09/15/20
96196	Cameron International Corporation (State/One-Stop)	Little Rock, AR	09/17/20	09/16/20
96197	Creganna Medical (State/One-Stop)	Tualatin, OR	09/18/20	09/17/20
96198	The LYCRA Company (Union)	Waynesboro, VA	09/18/20	09/17/20
96300	Collins Aerospace (State/One-Stop)	Windsor Locks, CT	09/22/20	09/21/20
96301	Advanced Welding Technologies (State/One-Stop)	Erie, PA	09/23/20	09/22/20
96302	Lee Enterprises (State/One-Stop)	Davenport, IA	09/23/20	09/23/20
96303	WABTEC (GE Transportation Grove City) (State/One-Stop)	Grove City, PA	09/23/20	09/22/20
96304	Arcosa Wind Towers, Inc. (State/One-Stop)	Clinton, IL	09/24/20	09/23/20
96305	Foveon Incorporated (State/One-Stop)	San Jose, CA	09/24/20	09/23/20
96306	Itron Inc. (State/One-Stop)	Liberty Lake, WA	09/24/20	09/18/20
96307	Acushnet Company (State/One-Stop)	Fairhaven, MA	09/25/20	09/23/20
96308	Albers Finishing and Solutions (State/One-Stop)	Cheney, KS	09/25/20	09/24/20
96309	Howmet Aerospace (State/One-Stop)	Laporte, IN	09/25/20	09/25/20
96310	LMI Wichita (State/One-Stop)	Wichita, KS	09/25/20	09/24/20
96311	Shop Vac Corporation (State/One-Stop)	Williamsport, PA	09/25/20	09/24/20
96401	Eaton (Bussmann Division) (State/One-Stop)	Ellisville, MO	09/28/20	09/25/20
96402	JSW Steel USA (State/One-Stop)	Baytown, TX	09/28/20	09/25/20
96403	Kiswire Pine Bluff, Inc. (State/One-Stop)	Pine Bluff, AR	09/28/20	09/25/20
96404	Nationwide Insurance (State/One-Stop)	Des Moines, IA	09/28/20	09/25/20
96405	NWI Wichita LLC (State/One-Stop)	Wichita, KS	09/28/20	09/25/20
96406	GRI Texas Towers, Inc. (State/One-Stop)	Amarillo, TX	09/29/20	09/28/20
96500	Direct TV–AT&T–VRIO (State Workforce Office)	El Segundo, CA	09/30/20	09/29/20
96501	Joe Benbasset Inc. (Company Official)	New York, NY	09/30/20	09/23/20

[FR Doc. 2020–23619 Filed 10–23–20; 8:45 am]

BILLING CODE P

DEPARTMENT OF LABOR

Employment and Training Administration

Agency Information Collection Activities; Comment Request; Contribution Operations

ACTION: Notice.

SUMMARY: The Department of Labor's (DOL) Employment and Training Administration (ETA) is soliciting comments concerning a proposed extension for the authority to conduct the information collection request (ICR) titled, ''ETA 581 Contribution Operations.'' The ETA 581 provides information on volume of work and state agency performance in determining the taxable status of employers and the processing of wage items; in the collection of past due contributions and payments in lieu of contributions, and delinquent reports; and in field audit activity. The data provide measures of the effectiveness of the tax program. This comment request is part of continuing Departmental efforts to reduce paperwork and respondent burden in accordance with the Paperwork Reduction Act of 1995 (PRA).

DATES: Consideration will be given to all written comments received by December 28, 2020.

ADDRESSES: A copy of this ICR with applicable supporting documentation, including a description of the likely respondents, proposed frequency of response, and estimated total burden, may be obtained free by contacting Rachel Beistel by telephone at 202–693–2736] (this is not a toll-free number), TTY 1–877–889–5627 (this is not a toll-free number), or by email at *beistel.rachel@dol.gov.*

Submit written comments about, or requests for a copy of, this ICR by mail or courier to the U.S. Department of Labor, Employment and Training Administration, Office of Unemployment Insurance, 200 Constitution Avenue NW, Room S–4519, Washington, DC 20210; by email: *beistel.rachel@dol.gov*; or by fax 202–693–3975.

FOR FURTHER INFORMATION CONTACT: Contact Rachel Beistel by telephone at 202–693–2736 (this is not a toll-free number) or by email at *beistel.rachel@dol.gov.*

SUPPLEMENTARY INFORMATION: DOL, as part of continuing efforts to reduce paperwork and respondent burden, conducts a pre-clearance consultation program to provide the general public and Federal agencies an opportunity to

comment on proposed and/or continuing collections of information before submitting them to the Office of Management and Budget (OMB) for final approval. This program helps to ensure requested data can be provided in the desired format, reporting burden (time and financial resources) is minimized, collection instruments are clearly understood, and the impact of collection requirements can be properly assessed.

44 U.S.C. 3506(c)(2)(A) authorizes this information collection.

This information collection is subject to the PRA. A Federal agency generally cannot conduct or sponsor a collection of information, and the public is generally not required to respond to an information collection, unless it is approved by OMB under the PRA and displays a currently valid OMB Control Number. In addition, notwithstanding any other provisions of law, no person shall generally be subject to penalty for failing to comply with a collection of information that does not display a valid Control Number. See 5 CFR 1320.5(a) and 1320.6.

Interested parties are encouraged to provide comments to the contact shown in the **ADDRESSES** section. Comments must be written to receive consideration, and they will be summarized and included in the request for OMB approval of the final ICR. In order to help ensure appropriate consideration, comments should mention OMB Control Number 1205–0178.

Submitted comments will also be a matter of public record for this ICR and posted on the internet, without redaction. DOL encourages commenters not to include personally identifiable information, confidential business data, or other sensitive statements/information in any comments.

DOL is particularly interested in comments that:

- Evaluate whether the proposed collection of information is necessary for the proper performance of the functions of the agency, including whether the information will have practical utility;
- Evaluate the accuracy of the agency's estimate of the burden of the proposed collection of information, including the validity of the methodology and assumptions used;
- Enhance the quality, utility, and clarity of the information to be collected; and
- Minimize the burden of the collection of information on those who are to respond, including through the use of appropriate automated, electronic, mechanical, or other technological collection techniques or other forms of information technology, (*e.g.,* permitting electronic submission of responses).

Agency: DOL–ETA.

Type of Review: Extension without Changes.

Title of Collection: Unemployment Insurance Tax Contribution Operations Reporting.

Form: ETA 581, Contribution Operations.

OMB Control Number: 1205–0178.

Affected Public: State governments.

Estimated Number of Respondents: 53.

Frequency: Quarterly.

Total Estimated Annual Responses: 212.

Estimated Average Time per Response: 7.5 hours.

Estimated Total Annual Burden Hours: 1,590 hours.

Total Estimated Annual Other Cost Burden: $0.

Authority: 44 U.S.C. 3506(c)(2)(A).

John Pallasch,

Assistant Secretary for Employment and Training.

[FR Doc. 2020–23625 Filed 10–23–20; 8:45 am]

BILLING CODE 4510–FW–P

DEPARTMENT OF LABOR

Employment and Training Administration

Post-Initial Determinations Regarding Eligibility To Apply for Trade Adjustment Assistance

In accordance with Sections 223 and 284 (19 U.S.C. 2273 and 2395) of the Trade Act of 1974 (19 U.S.C. 2271, *et seq.*) (''Act''), as amended, the Department of Labor herein presents Notice of Affirmative Determinations Regarding Application for Reconsideration, summaries of Negative Determinations Regarding Applications for Reconsideration, summaries of Revised Certifications of Eligibility, summaries of Revised Determinations (after Affirmative Determination Regarding Application for Reconsideration), summaries of Negative Determinations (after Affirmative Determination Regarding Application for Reconsideration), summaries of Revised Determinations (on remand from the Court of International Trade), and summaries of Negative Determinations (on remand from the Court of International Trade) regarding eligibility to apply for trade adjustment assistance under Chapter 2 of the Act (''TAA'') for workers by (TA–W) number issued during the period of September 1, 2020 through September 30, 2020. Post-initial determinations are issued after a petition has been certified or denied. A post-initial determination may revise a certification, or modify or affirm a negative determination.

Affirmative Determinations Regarding Applications for Reconsideration

The following Applications for Reconsideration have been received and granted. See 29 CFR 90.18(d). The group of workers or other persons showing an interest in the proceedings may provide written submissions to show why the determination under reconsideration should or should not be modified. The submissions must be sent no later than ten days after publication in **Federal Register** to the Office of the Director, Office of Trade Adjustment Assistance, Employment and Training Administration, U.S. Department of Labor, Room N–5428, 200 Constitution Avenue NW, Washington, DC 20210. See 29 CFR 90.18(f).

TA–W No.	Subject firm	Location
95,329	General Motors Renaissance Center	Detroit, MI.

Revised Certifications of Eligibility

The following revised certifications of eligibility to apply for TAA have been issued. The date following the company name and location of each determination references the impact date for all workers of such determination, and the reason(s) for the determination.

The following revisions have been issued.

TA–W No.	Subject firm	Location	Impact date	Reason(s)
94,776	Thomson Reuters	Rochester, NY	5/1/2018	Worker Group Clarification.

I hereby certify that the aforementioned determinations were issued during the period of September 1, 2020 through September 30, 2020. These determinations are available on the Department's website *https://www.doleta.gov/tradeact/petitioners/taa_search_form.cfm* under the searchable listing determinations or by calling the Office of Trade Adjustment Assistance toll free at 888–365–6822.

Signed at Washington, DC, this 8th day of October 2020.

Hope D. Kinglock,

Certifying Officer, Office of Trade Adjustment Assistance.

[FR Doc. 2020–23621 Filed 10–23–20; 8:45 am]

BILLING CODE 4510–FN–P

DEPARTMENT OF LABOR

Office of the Secretary

Agency Information Collection Activities; Submission for OMB Review; Comment Request; Requirements for Occupational Safety and Health Administration Training Institute Education Centers Program and Occupational Safety and Health Administration Outreach

ACTION: Notice of availability; request for comments.

SUMMARY: The Department of Labor (DOL) is submitting this Occupational Safety and Health Administration (OSHA)-sponsored information collection request (ICR) to the Office of Management and Budget (OMB) for review and approval in accordance with the Paperwork Reduction Act of 1995 (PRA). Public comments on the ICR are invited.

DATES: The OMB will consider all written comments that agency receives on or before November 25, 2020.

ADDRESSES: Written comments and recommendations for the proposed information collection should be sent within 30 days of publication of this notice to *www.reginfo.gov/public/do/PRAMain.* Find this particular information collection by selecting ''Currently under 30-day Review—Open for Public Comments'' or by using the search function.

Comments are invited on: (1) Whether the collection of information is necessary for the proper performance of the functions of the Department, including whether the information will have practical utility; (2) if the information will be processed and used in a timely manner; (3) the accuracy of the agency's estimates of the burden and cost of the collection of information, including the validity of the methodology and assumptions used; (4) ways to enhance the quality, utility and clarity of the information collection; and (5) ways to minimize the burden of the collection of information on those who are to respond, including the use of automated collection techniques or other forms of information technology.

FOR FURTHER INFORMATION CONTACT: Crystal Rennie by telephone at 202–693–0456, or by email at *DOL_PRA_PUBLIC@dol.gov.*

SUPPLEMENTARY INFORMATION: OSHA's Office of Training and Educational Programs is designed to recognize and promote excellence in safety and health training. The OSHA Training Institute's (OTI) Education Centers offer courses for the private sector and other federal agency personnel at locations throughout the United States. OSHA extends its training reach to workers through its various Outreach Training Programs. Through the Outreach Training Programs, qualified individuals complete an OSHA trainer course and become authorized to teach student courses. The collection of information requirements contained in these programs are necessary to evaluate the applicant organization and to implement, oversee, and monitor the OTI Education Centers and Outreach Training Programs, courses and trainers. For additional substantive information about this ICR, see the related notice published in the **Federal Register** on May 28, 2020 (85 FR 32052).

This information collection is subject to the PRA. A Federal agency generally cannot conduct or sponsor a collection of information, and the public is generally not required to respond to an information collection, unless the OMB approves it and displays a currently valid OMB Control Number. In addition, notwithstanding any other provisions of law, no person shall generally be subject to penalty for failing to comply with a collection of information that does not display a valid OMB Control Number. *See* 5 CFR 1320.5(a) and 1320.6.

DOL seeks PRA authorization for this information collection for three (3) years. OMB authorization for an ICR cannot be for more than three (3) years without renewal. The DOL notes that information collection requirements submitted to the OMB for existing ICRs receive a month-to-month extension while they undergo review.

Agency: DOL–OSHA.

Title of Collection: Requirements for the Occupational Safety and Health Administration Training Institute Education Centers Programs and Occupational Safety and Health Administration Outreach.

OMB Control Number: 1218–0262.

Affected Public: Private Sector, Businesses or other for-profits institutions, Not-for-profit institutions; Individuals or Households.

Total Estimated Number of Respondents: 53,504.

Total Estimated Number of Responses: 56,674.

Total Estimated Annual Time Burden: 16,377 hours.

Total Estimated Annual Other Costs Burden: $0.

Authority: 44 U.S.C. 3507(a)(1)(D).

Crystal Rennie,

Acting Departmental Clearance Officer.

[FR Doc. 2020–23623 Filed 10–23–20; 8:45 am]

BILLING CODE 4510–26–P

DEPARTMENT OF LABOR

Office of the Secretary

Agency Information Collection Activities; Submission for OMB Review; Comment Request; Apprenticeship Evidence-Building Portfolio Evaluation

ACTION: Notice of availability; request for comments.

SUMMARY: The Department of Labor (DOL) is submitting this Chief Evaluation Office (CEO)-sponsored information collection request (ICR) to the Office of Management and Budget (OMB) for review and approval in accordance with the Paperwork Reduction Act of 1995 (PRA). Public comments on the ICR are invited.

DATES: The OMB will consider all written comments that agency receives on or before November 25, 2020.

ADDRESSES: Written comments and recommendations for the proposed information collection should be sent within 30 days of publication of this

notice to *www.reginfo.gov/public/do/PRAMain.* Find this particular information collection by selecting ''Currently under 30-day Review—Open for Public Comments'' or by using the search function.

Comments are invited on: (1) Whether the collection of information is necessary for the proper performance of the functions of the Department, including whether the information will have practical utility; (2) if the information will be processed and used in a timely manner; (3) the accuracy of the agency's estimates of the burden and cost of the collection of information, including the validity of the methodology and assumptions used; (4) ways to enhance the quality, utility and clarity of the information collection; and (5) ways to minimize the burden of the collection of information on those who are to respond, including the use of automated collection techniques or other forms of information technology.

FOR FURTHER INFORMATION CONTACT: Crystal Rennie by telephone at 202–693–0456, or by email at *DOL_PRA_PUBLIC@dol.gov.*

SUPPLEMENTARY INFORMATION: The Chief Evaluation Office of the U.S. Department of Labor commissioned the high priority Apprenticeship Evidence-Building Portfolio evaluation contract to build the evidence on apprenticeship, including apprenticeship models, practices, and partnership strategies in high-growth occupations and industries. DOL's initiatives to expand access to apprenticeship opportunities support the Presidential Executive Order ''Expanding Apprenticeships in America.'' The portfolio of initiatives includes the Scaling Apprenticeship Through Sector-Based Strategies grants, Closing the Skills Gap grants, Veterans Employment and Training Services Apprenticeship pilot, and other DOL investments. For additional substantive information about this ICR, see the related notice published in the **Federal Register** on December 19, 2019 (84 FR 69778).

This information collection is subject to the PRA. A Federal agency generally cannot conduct or sponsor a collection of information, and the public is generally not required to respond to an information collection, unless the OMB approves it and displays a currently valid OMB Control Number. In addition, notwithstanding any other provisions of law, no person shall generally be subject to penalty for failing to comply with a collection of information that does not display a valid OMB Control Number. *See* 5 CFR 1320.5(a) and 1320.6.

DOL seeks PRA authorization for this information collection for three (3) years. OMB authorization for an ICR cannot be for more than three (3) years without renewal. The DOL notes that information collection requirements submitted to the OMB for existing ICRs receive a month-to-month extension while they undergo review.

Agency: DOL–CEO.

Title of Collection: Apprenticeship Evidence-Building Portfolio Evaluation.

OMB Control Number: 1290–0NEW.

Affected Public: Individuals or Households, Private Sector, Businesses or other for-profits, and Non-for-profit.

Total Estimated Number of Respondents: 5,354.

Total Estimated Number of Responses: 10,154.

Total Estimated Annual Time Burden: 3,523 hours.

Total Estimated Annual Other Costs Burden: $0.

(Authority: 44 U.S.C. 3507(a)(1)(D))

Crystal Rennie,

Acting Departmental Clearance Officer.

[FR Doc. 2020–23624 Filed 10–23–20; 8:45 am]

BILLING CODE 4510–HX–P

NATIONAL ARCHIVES AND RECORDS ADMINISTRATION

[NARA–2021–004]

Agency Information Collection Activities: Submission for OMB Review; Comment Request

AGENCY: National Archives and Records Administration (NARA).

ACTION: Notice.

SUMMARY: We have submitted a request to the Office of Management and Budget (OMB) for approval to continue to collect information through a voluntary survey of visitors to the National Archives Museum and building in Washington, DC. In order to measure whether the National Archives Museum is successfully achieving its goals, as well as to determine if we need to make any modifications, we conduct a survey of those who have visited the Museum, using the American Association of State and Local History (AASLH) customer survey. This is a 12-minute questionnaire given to a random sample of those exiting this location in downtown Washington, DC. We invite you to comment on this proposed information collection pursuant to the Paperwork Reduction Act of 1995.

DATES: OMB must receive comments in writing on or before November 25, 2020.

ADDRESSES: Send any comments and recommendations on the proposed information collection in writing to *www.reginfo.gov/public/do/PRAMain.* You can find this particular information collection by selecting ''Currently under 30-day Review—Open for Public Comments'' or by using the search function.

FOR FURTHER INFORMATION CONTACT: Tamee Fechhelm, Paperwork Reduction Act Officer, by email at *tamee.fechhelm@nara.gob* or by telephone at 301.837.1694 with any requests for additional information.

SUPPLEMENTARY INFORMATION: Pursuant to the Paperwork Reduction Act of 1995 (Pub. L. 104–13), we invite the public and other Federal agencies to comment on proposed information collections. We published a notice of proposed collection for this information collection on August 7, 2020 (85 FR 47989) and we received no comments. We are therefore submitting the described information collection to OMB for approval.

If you have comments or suggestions, they should address one or more of the following points: (a) Whether the proposed information collection is necessary for NARA to properly perform its functions; (b) our estimate of the burden of the proposed information collection and its accuracy; (c) ways we could enhance the quality, utility, and clarity of the information we collect; (d) ways we could minimize the burden on respondents of collecting the information, including through information technology; and (e) whether this collection affects small businesses.

In this notice, we solicit comments concerning the following information collection:

Title: NARA Visitors Study.

OMB number: 3095–0067.

Agency form number: N/A.

Type of review: Regular.

Affected public: Individuals who visit the National Archives Experience in Washington, DC.

Estimated number of respondents: 200.

Estimated time per response: 12 minutes.

Frequency of response: On occasion (when an individual visits the National Archives Museum in Washington, DC).

Estimated total annual burden hours: 40 hours.

Abstract: The general purpose of this voluntary data collection is to benchmark NARA's performance in relation to other history museums. Information collected from visitors will assess the overall impact, expectations, presentation, logistics, motivation, demographic profile and learning experience. Once we analyse the compiled information from the surveys

as a set, the collected information will assist us to determine our success in achieving the Museum's goals.

Swarnali Haldar,

Executive for Information Services/CIO.

[FR Doc. 2020–23617 Filed 10–23–20; 8:45 am]

BILLING CODE 7515–01–P

NATIONAL CREDIT UNION ADMINISTRATION

Sunshine Act Meeting

TIME AND DATE:

2:00 p.m., Wednesday, October 28, 2020

Recess: 2:30 p.m.

2:45 p.m., Wednesday, October 28, 2020

PLACE: Due to the COVID–19 Pandemic, the meeting will be open to the public via live webcast only. Visit the agency's homepage (*www.ncua.gov.*) and access the provided webcast link.

STATUS: Parts of this meeting will be open to the public. The rest of the meeting will be closed to the public.

MATTERS TO BE CONSIDERED:

PORTIONS OPEN TO THE PUBLIC:

1. NCUA Rules and Regulations, Role of Supervisory Guidance.

PORTIONS CLOSED TO THE PUBLIC:

1. Personnel Matter. Closed pursuant to Exemptions (2), and (6).
2. Personnel Matter. Closed pursuant to Exemptions (2), and (6).

CONTACT PERSON FOR MORE INFORMATION: Gerard Poliquin, Secretary of the Board, Telephone: 703–518–6304.

Gerard Poliquin,

Secretary of the Board.

[FR Doc. 2020–23704 Filed 10–22–20; 4:15 pm]

BILLING CODE 7535–01–P

NUCLEAR REGULATORY COMMISSION

[NRC–2020–0001]

Sunshine Act Meetings

TIME AND DATE: Weeks of October 26, November 2, 9, 16, 23, 30, 2020.

PLACE: Commissioners' Conference Room, 11555 Rockville Pike, Rockville, Maryland.

STATUS: Public.

Week of November 2, 2020

Thursday, November 5, 2020

9:00 a.m.—Strategic Programmatic Overview of the Decommissioning and Low-Level Waste and Nuclear Materials Users Business Lines (Public Meeting) (Contact: Celimar Valentin-Rodriguez: 301–415–7124)

Additional Information: Due to COVID–19, there will be no physical public attendance. The public is invited to attend the Commission's meeting live by webcast at the Web address—*https://www.nrc.gov/.*

Week of November 9, 2020—Tentative

There are no meetings scheduled for the week of November 9, 2020.

Week of November 16, 2020—Tentative

Wednesday, November 18, 2020

10:00 a.m.—Meeting with the Advisory Committee on the Medical Uses of Isotopes (Public Meeting) (Contact: Kellee Jamerson: 301–415–7408)

Additional Information: Due to COVID–19, there will be no physical public attendance. The public is invited to attend the Commission's meeting live by webcast at the Web address—*https://www.nrc.gov/.*

Week of November 23, 2020—Tentative

There are no meetings scheduled for the week of November 23, 2020.

Week of November 30, 2020—Tentative

Friday, December 4, 2020

10:00 a.m.—Meeting with Advisory Committee on Reactor Safeguards (Public Meeting) (Contact: Larry Burkhart: 301–287–3775)

Additional Information: Due to COVID–19, there will be no physical public attendance. The public is invited to attend the Commission's meeting live by webcast at the Web address—*https://www.nrc.gov/.*

CONTACT PERSON FOR MORE INFORMATION: For more information or to verify the status of meetings, contact Denise McGovern at 301–415–0681 or via email at *Denise.McGovern@nrc.gov.* The schedule for Commission meetings is subject to change on short notice.

The NRC Commission Meeting Schedule can be found on the internet at: *https://www.nrc.gov/public-involve/public-meetings/schedule.html.*

The NRC provides reasonable accommodation to individuals with disabilities where appropriate. If you need a reasonable accommodation to participate in these public meetings or need this meeting notice or the transcript or other information from the public meetings in another format (*e.g.,* braille, large print), please notify Anne Silk, NRC Disability Program Specialist, at 301–287–0745, by videophone at 240–428–3217, or by email at *Anne.Silk@nrc.gov.* Determinations on requests for reasonable accommodation will be made on a case-by-case basis.

Members of the public may request to receive this information electronically. If you would like to be added to the distribution, please contact the Nuclear Regulatory Commission, Office of the Secretary, Washington, DC 20555 (301–415–1969), or by email at *Tyesha.Bush@nrc.gov* or *Marcia.Pringle@nrc.gov.*

The NRC is holding the meetings under the authority of the Government in the Sunshine Act, 5 U.S.C. 552b.

Dated: October 22, 2020.

For the Nuclear Regulatory Commission.

Denise L. McGovern,

Policy Coordinator, Office of the Secretary.

[FR Doc. 2020–23710 Filed 10–22–20; 4:15 pm]

BILLING CODE 7590–01–P

NUCLEAR REGULATORY COMMISSION

[Docket No. 50–331; NRC–2020–0148]

NextEra Energy Duane Arnold, LLC; Duane Arnold Energy Center; Post-Shutdown Decommissioning Activities Report

AGENCY: Nuclear Regulatory Commission.

ACTION: Reopening of comment period.

SUMMARY: On June 19, 2020, the U.S. Nuclear Regulatory Commission (NRC) solicited comments on the post-shutdown decommissioning activities report (PSDAR) for the Duane Arnold Energy Center (DAEC). The PSDAR, which includes the site-specific decommissioning cost estimate (DCE), provides an overview of NextEra Energy Duane Arnold, LLC's (NEDA or the licensee) planned decommissioning activities, schedule, projected costs, and environmental impacts for DAEC. The public comment period closed on October 19, 2020. The NRC has decided to reopen the public comment period to allow more time for members of the public to develop and submit their comments. The NRC will hold a public meeting to discuss the PSDAR's content and receive comments once restrictions associated with the Coronavirus Disease 2019 public health emergency are lifted.

DATES: The comment period for the document published on June 19, 2020 (85 FR 37116) has been reopened. Comments should be filed no later than February 19, 2021. Comments received after this date will be considered, if it is practical to do so, but the Commission is able to ensure consideration only for comments received on or before this date.

ADDRESSES: You may submit comments by any of the following methods (unless this document describes a different method for submitting comments on a specific subject); however, the NRC

encourages electronic comment submission through the Federal Rulemaking website:

• *Federal Rulemaking Website:* Go to *https://www.regulations.gov* and search for Docket ID NRC–2020–0148. Address questions about Docket IDs in *Regulations.gov* to Jennifer Borges; telephone: 301–287–9127; email: *Jennifer.Borges@nrc.gov.* For technical questions, contact the individual listed in the **FOR FURTHER INFORMATION CONTACT** section of this document.

• *Mail comments to:* Office of Administration, Mail Stop: TWFN–7–A60M, U.S. Nuclear Regulatory Commission, Washington, DC 20555–0001, ATTN: Program Management, Announcements and Editing Staff.

For additional direction on obtaining information and submitting comments, see ''Obtaining Information and Submitting Comments'' in the **SUPPLEMENTARY INFORMATION** section of this document.

FOR FURTHER INFORMATION CONTACT: Scott P. Wall, Office of Nuclear Reactor Regulation, U.S. Nuclear Regulatory Commission, Washington DC 20555–0001, telephone: 301–415–2855; email: *Scott.Wall@nrc.gov.*

SUPPLEMENTARY INFORMATION:

I. Obtaining Information and Submitting Comments

A. Obtaining Information

Please refer to Docket ID NRC–2020–0148 when contacting the NRC about the availability of information for this action. You may obtain publicly available information related to this action by any of the following methods:

• *Federal Rulemaking Website:* Go to *https://www.regulations.gov* and search for Docket ID NRC–2020–0148.

• *NRC's Agencywide Documents Access and Management System (ADAMS):* You may obtain publicly available documents online in the ADAMS Public Documents collection at *https://www.nrc.gov/reading-rm/adams.html.* To begin the search, select ''Begin Web-based ADAMS Search.'' For problems with ADAMS, please contact the NRC's Public Document Room (PDR) reference staff at 1–800–397–4209, 301–415–4737, or by email to *pdr.resource@nrc.gov.* The ADAMS accession number for each document referenced (if it is available in ADAMS) is provided the first time that it is mentioned in this document.

• *Attention:* The PDR, where you may examine and order copies of public documents is currently closed. You may submit your request to the PDR via email at *PDR.Resource@nrc.gov* or call 1–800–397–4209 between 8:00 a.m. and 4:00 p.m. (EST), Monday through Friday, except Federal holidays.

B. Submitting Comments

The NRC encourages electronic comment submission through the Federal Rulemaking Website (*https://www.regulations.gov*). Please include Docket ID NRC–2020–0148 in your comment submission.

The NRC cautions you not to include identifying or contact information that you do not want to be publicly disclosed in your comment submission. The NRC will post all comment submissions at *https://www.regulations.gov* as well as enter the comment submissions into ADAMS. The NRC does not routinely edit comment submissions to remove identifying or contact information.

If you are requesting or aggregating comments from other persons for submission to the NRC, then you should inform those persons not to include identifying or contact information that they do not want to be publicly disclosed in their comment submission. Your request should state that the NRC does not routinely edit comment submissions to remove such information before making the comment submissions available to the public or entering the comment into ADAMS.

II. Discussion

On June 19, 2020, the NRC solicited comments on the PSDAR dated April 2, 2020, including the site-specific DCE for DAEC (ADAMS Accession No. ML20094F603). The purpose of the original **Federal Register** notice (85 FR 37116; June 19, 2020) was to inform the public of a meeting to discuss and accept comments on the PSDAR and DCE. The public comment period closed on October 19, 2020. The NRC has decided to reopen the public comment period on this document until February 19, 2021, to allow more time for members of the public to submit their comments. The NRC will hold a public meeting to discuss the PSDAR's content and receive comments once restrictions associated with the Coronavirus Disease 2019 public health emergency are lifted. Members of the public interested in attending this meeting should monitor the NRC's Public Meeting Schedule website at *https://www.nrc.gov/pmns/mtg* for additional information.

Dated: October 20, 2020.

For the Nuclear Regulatory Commission.

Nancy L. Salgado,

Chief, Plant Licensing Branch III, Division of Operating Reactor Licensing, Office of Nuclear Reactor Regulation.

[FR Doc. 2020–23564 Filed 10–23–20; 8:45 am]

BILLING CODE 7590–01–P

SECURITIES AND EXCHANGE COMMISSION

[Release No. 34–90226; File No. SR–Phlx–2020–41]

Self-Regulatory Organizations; Nasdaq PHLX LLC; Notice of Designation of a Longer Period for Commission Action on Proposed Rule Change To List and Trade Options on a Nasdaq-100® Volatility Index

October 20, 2020.

On August 24, 2020, Nasdaq PHLX LLC filed with the Securities and Exchange Commission (''Commission''), pursuant to Section 19(b)(1) of the Securities Exchange Act of 1934 (''Act'') [1] and Rule 19b–4 thereunder,[2] a proposed rule change to list and trade options on a Nasdaq-100® Volatility Index. The proposed rule change was published for comment in the **Federal Register** on September 8, 2020.[3]

Section 19(b)(2) of the Act [4] provides that within 45 days of the publication of notice of the filing of a proposed rule change, or within such longer period up to 90 days as the Commission may designate if it finds such longer period to be appropriate and publishes its reasons for so finding or as to which the self-regulatory organization consents, the Commission shall either approve the proposed rule change, disapprove the proposed rule change, or institute proceedings to determine whether the proposed rule change should be disapproved. The 45th day after publication of the Notice for the proposed rule change is October 23, 2020. The Commission is extending this 45-day period.

The Commission finds that it is appropriate to designate a longer period within which to take action on the proposed rule change so that it has sufficient time to consider the proposed rule change. Accordingly, pursuant to

[1] 15 U.S.C. 78s(b)(1).

[2] 17 CFR 240.19b–4.

[3] *See* Securities Exchange Act Release No. 89725 (September 1, 2020), 85 FR 55544 (SR–Phlx–2020–41) (''Notice''). Comment received on the Notice is available on the Commission's website at: *https://www.sec.gov/comments/sr-phlx-2020-41/srphlx202041.htm.*

[4] 15 U.S.C. 78s(b)(2).

Section 19(b)(2) of the Act,[5] the Commission designates December 7, 2020, as the date by which the Commission shall either approve or disapprove, or institute proceedings to determine whether to disapprove, the proposed rule change (File No. SR–Phlx–2020–41).

For the Commission, by the Division of Trading and Markets, pursuant to delegated authority.[6]

J. Matthew DeLesDernier,

Assistant Secretary.

[FR Doc. 2020–23568 Filed 10–23–20; 8:45 am]

BILLING CODE 8011–01–P

[5] 15 U.S.C. 78s(b)(2).

[6] 17 CFR 200.30–3(a)(31).

SECURITIES AND EXCHANGE COMMISSION

[Release No. 34–90232; File No. SR–CBOE–2020–097]

Self-Regulatory Organizations; Cboe Exchange, Inc.; Notice of Filing and Immediate Effectiveness of a Proposed Rule Change Relating To Amend Its Fees Schedule

October 20, 2020.

Pursuant to Section 19(b)(1) of the Securities Exchange Act of 1934 (the ''Act''),[1] and Rule 19b–4 thereunder,[2] notice is hereby given that on October 8, 2020, Cboe Exchange, Inc. (the ''Exchange'' or ''Cboe Options'') filed with the Securities and Exchange Commission (the ''Commission'') the proposed rule change as described in Items I, II, and III below, which Items have been prepared by the Exchange. The Commission is publishing this notice to solicit comments on the proposed rule change from interested persons.

I. Self-Regulatory Organization's Statement of the Terms of Substance of the Proposed Rule Change

Cboe Exchange, Inc. (the ''Exchange'' or ''Cboe Options'') proposes to amend its Fees Schedule. The text of the proposed rule change is provided in Exhibit 5.

The text of the proposed rule change is also available on the Exchange's website (*http://www.cboe.com/AboutCBOE/CBOELegalRegulatoryHome.aspx*), at the Exchange's Office of the Secretary, and at the Commission's Public Reference Room.

[1] 15 U.S.C. 78s(b)(1).

[2] 17 CFR 240.19b–4.

II. Self-Regulatory Organization's Statement of the Purpose of, and Statutory Basis for, the Proposed Rule Change

In its filing with the Commission, the Exchange included statements concerning the purpose of and basis for the proposed rule change and discussed any comments it received on the proposed rule change. The text of these statements may be examined at the places specified in Item IV below. The Exchange has prepared summaries, set forth in sections A, B, and C below, of the most significant aspects of such statements.

A. Self-Regulatory Organization's Statement of the Purpose of, and Statutory Basis for, the Proposed Rule Change

1. Purpose

The Exchange proposes to amend its Fees Schedule to (1) remove Market-Maker floor volume from the Marketing Fees assessment; (2) adopt a new fee code for Market-Maker volume executed on the floor; (3) remove Market-Maker floor volume eligibility for credits under certain programs; (4) amend the Clearing Trading Permit Holder Fee Cap; (5) reinstate certain facility fees currently waived in light of the COVID–19 pandemic; (6) add options on the S&P 500 ESG Index (''SPESG'') to the same Customer Large Trade Discount assessed for options on the S&P 500 Index (''SPX''); and (7) amend the application of the Strategy Fees Cap to certain products, effective October 1, 2020.[3]

The Exchange first notes that it operates in a highly competitive market in which market participants can readily direct order flow to competing venues if they deem fee levels at a particular venue to be excessive or incentives to be insufficient. More specifically, the Exchange is only one of 16 options venues to which market participants may direct their order flow. Based on publicly available information, no single options exchange has more than 16% of the market share.[4] Thus, in such a low-concentrated and highly competitive market, no single options exchange possesses significant pricing power in the execution of option order flow. The Exchange believes that the ever-shifting market share among the exchanges from month to month demonstrates that market participants can shift order flow or discontinue to reduce use of certain categories of products in response to fee changes. Accordingly, competitive forces constrain the Exchange's transaction fees, and market participants can readily trade on competing venues if they deem pricing levels at those other venues to be more favorable. In response to competitive pricing, the Exchange, like other options exchanges, offers rebates and assesses fees for certain order types executed on or routed through the Exchange.

Proposed Removal of Market-Maker Floor Volume From Assessment of Marketing Fees

The Exchange first proposes to amend its Marketing Fee program. By way of background the Marketing Fee is assessed on transactions of Market-Makers, resulting from customer orders at the per contract rate provided above on all classes of equity options, options on ETFs, options on ETNs and index options.[5] A Designated Primary Market-Maker (''DPM''), a ''Preferred Market-Maker (''PMM''), or a Lead Market-Maker (''LMM'') (collectively ''Preferenced Market-Maker'') are given access to the marketing fee funds generated from a Preferenced order. The funds collected via this Marketing Fee are then put into pools controlled by the Preferenced Market-Maker. The Preferenced Market-Maker controlling a certain pool of funds can then determine the order flow provider(s) to which the funds should be directed in order to encourage such order flow provider(s) to send orders to the Exchange. Currently, the Marketing Fee does not apply to Market-Maker transactions resulting from orders from non-Trading Permit Holder market-makers; transactions resulting from penny cabinet trades and sub-penny cabinet trades; transactions in FLEX Options; transactions executed as a qualified contingent cross (''QCC''); and transactions in the Penny Pilot classes resulting from orders executed through the Step Up Mechanism (''SUM''). Each month, undisbursed marketing fees in excess of $250,000 will be reimbursed to the Market-Makers that contributed to the pool based upon a one month look back and their pro-rata portion of the entire amount of marketing fee collected during that month.

[3] The Exchange initially filed the proposed fee changes on October 1, 2020 (SR–CBOE–2020–093). On October 8, 2020, the Exchange withdrew that filing and submitted this filing.

[4] *See* Cboe Global Markets U.S. Options Monthly Market Volume Summary (September 29, 2020), available at *https://markets.cboe.com/us/options/market_statistics/*.

[5] The marketing fee does not apply to Sector Indexes, DJX, MXEA, MXEF, XSP or products in Underlying Symbol List A.

The proposed rule change amends the Marketing Fees table by adding transactions in open outcry to the list of Market-Maker transactions to which the Marketing Fee does not apply. As such, transactions in open outcry will not be assessed, thus will not contribute to the pool nor be included in the one month look back of pro-rata contributions in determining the allocation of undisbursed marketing fees. The Exchange has recently observed that collecting on and distributing funds for Market-Maker transactions in open outcry resulting from customer orders has not served as a significant incentive in attracting customer order flow to the trading floor as designed. Therefore, the proposed rule change removes this assessment for such transactions on the trading floor, which, in turn will also assist the Exchange in redirecting resources and funding into other programs intended to incentivize customer order flow providers. The Exchange also notes that the proposed amendment to the Marketing Fee program is also in line with how other exchanges with trading floors apply their respective marketing fee programs.[6]

Proposed Fee Code for Market-Maker Volume Executed on the Trading Floor

The Exchange proposes to adopt a new fee code for Market-Maker orders transacted on the trading floor (*i.e.,* manual) in Equity, ETF, and ETN Options, Sector Indexes and All Other Index Products. Such orders will yield fee code ''MB'' and will be assessed a standard rate of $0.35 per contract. Currently, Market-Maker transactions in Equity, ETF, and ETN Options are assessed the same fee of $0.23 per contract. The proposed rule change is intended to assess manual Market-Maker order flow in light of the proposed change (described in detail above) to remove the assessment of Marketing Fees for manual Market-Maker order flow. Additionally, the proposed rule change is consistent with the manner in which other options exchanges with trading floors currently assess different standard rates between manual and electronic market maker volume.[7]

Proposed Removal of Market-Maker Floor Volume Eligibility Under Certain Programs

The Exchange proposes to remove Market-Maker volume transacted in open outcry from eligibility for credits pursuant to the Liquidity Provider Sliding Scale and the Affiliated Volume Plan (''AVP''). Currently, the Liquidity Provider Sliding Scale offers credits on Market-Maker orders where a Market-Maker achieves certain volume thresholds based on total national Market-Maker volume in all underlying symbols[8] during the calendar month. Currently, under AVP, if a Market-Maker affiliate[9] (''Affiliate OFP'') or Appointed OFP receives a credit under the Exchange's Volume Incentive Program (''VIP''), the Market-Maker will receive an access credit on their BOE Bulk Ports corresponding to the VIP tier reached as well as a transaction fee credit on their sliding scale Market-Maker transaction fees. Specifically, the proposed rule change provides in footnote 10 (appended to the Liquidity Provider Sliding Scale) that the Liquidity Provider Sliding Scale applies to Liquidity Provider (Cboe Options Market-Maker, DPM and LMM) transaction fees in all products except (1) Underlying Symbol List A (34) excluding XSP, and (2) (as proposed) volume executed in open outcry. The proposed rule change will also make clear that the volume thresholds under the Liquidity Provider Sliding Scale will continue to include volume executed in open outcry. The Exchange notes that it continues to include volume executed in open outcry in a Market-Maker's volume eligible to meet the tier thresholds in order to continue to incentivize Market-Maker order flow to the trading floor. The Exchange offers a hybrid market system and aims to continue to balance incentives for Market-Makers to contribute to deep liquid markets for investors on both its electronic and open outcry platforms. The proposed rule change provides in footnote 23 (appended to the AVP table) that volume executed in open outcry is not eligible to receive a credit under AVP. The Exchange notes that no changes are being made to the Volume Incentive Program as it relates to Market-Maker transactions in open outcry as it currently does not include Market-Maker volume. The proposed change to remove the eligibility of certain credits for Market-Maker volume in open outcry is also intended to balance the fact that Market-Makers will no longer be assessed Marketing Fees on such orders.

Proposed Amendment to Clearing Trading Permit Holder Fee Cap

The Clearing Trading Permit Holder Fee Cap table and accompanying footnote 22 provides that, for all non-facilitation business executed in AIM or open outcry, or as a QCC or FLEX transaction, transaction fees for Clearing Trading Permit Holder Proprietary and/or their Non-Trading Permit Holder Affiliates (collectively, ''Firms'') in all products except Sector Indexes and products in Underlying Symbol List A, in the aggregate, are capped at $75,000 per month per Clearing Trading Permit Holder. The proposed rule change amends the cap from $75,000 to $55,000. The proposed reduction in the fee cap amount is intended to incentivize Firms to submit increased order flow to the Exchange thus encouraging a healthy and diverse ecosystem as the Exchange has observed lower Firm volume across the industry in recently months than observed historically. Additionally, the Exchange notes that the proposed cap change is competitive with similar firm caps in place on other options exchanges.[10]

Proposed Reinstatement of Certain Facility Fees

Current footnote 24 provides for modified and waived fees for certain trading floor-related transaction fees and fees related to trading floor facilities while the trading floor operates in a modified state. Specifically, it provides that, among other things, monthly fees will be waived for the following facilities fees: Standard and non-standard booth rentals, wireless phone rental, arbitrage phone positions and satellite TV, provided however that such fees will be pro-rated based on the remaining trading days in the calendar month if the trading floor becomes fully operational mid-month. If a TPH is unable to utilize designated facility services while the trading floor is operating in a modified state, corresponding fees, including for

[6] *See* NYSE American Options Fee Schedule, Section IA, Options Transaction Fees and Credits, Marketing Charges Per Contract for Electronic Transactions, which assesses marketing charges on NYSE American Options Market Makers who are counterparties to an Electronic trade only.

[7] *See* BOX Options Fee Schedule, Section IA, Electronic Transaction Fees: Non-Auction Transaction, which assesses $0.50 or $0.75 for (taker) market maker orders; and Section IIA, Manual Transaction Fees: Qualified Open Outcry Orders (''QOO''), which assesses $0.25 for manual market maker orders; *see also* NYSE Arca Options Fee Schedule, Trade-Related Charges for Standard Options, which assesses $0.25 for manual market maker orders and $0.50 or $1.10 for electronic (take liquidity) market maker orders.

[8] Excluding products in Underlying Symbol List A and XSP.

[9] ''Affiliate'' defined as having at least 75% common ownership between the two entities as reflected on each entity's Form BD, Schedule A.

[10] *See* BOX Options Fee Schedule, Section IIA, Manual Transaction Fees: Qualified Open Outcry Orders, which provides that QOO Order fees for Broker Dealers will be capped at $75,000 per month per Broker Dealer; *see also* NYSE Arca Options Fee Schedule, Firm and Broker Dealer Monthly Firm Cap Tiers, which assesses a broker-dealer/firm cap between $65,000 and $100,000 for firms that achieve certain volume tiers.

standard and non-standard booth rentals, Exchangefone maintenance, single line maintenance, intra floor lines, voice circuits, data circuits at local carrier (entrance), and data circuits at in-house frame, will not be assessed.

While the Exchange's trading floor continues to operate in a modified state due to the ongoing COVID–19 pandemic, on September 21, 2020, the Exchange further expanded its trading floor capacity. As a result, Trading Permit Holders have been able to again occupy booths and utilize the wireless phone rentals. The Exchange notes also that as a result of the recent expansion all wireless phone rental will be in use, however, not all booths will be occupied. Therefore, the proposed rule change updates footnote 24 to reinstate fees for such facilities and provides that, beginning October 1, 2020, facilities fees for standard and non-standard booth rentals and wireless phone rental will be reinstated. The proposed rule change makes clear too that if a TPH is unable to utilize designated facility services while the trading floor is operating in a modified state, corresponding fees, including for standard and non-standard booth rentals will not be assessed.

Proposed Addition of SPESG to the Rate Provided for SPX in the Large Customer Discount Program

On September 21, 2020, the Exchange submitted a fee filing to introduce fees for the newly listed and traded SPESG on the Exchange.[11] The proposal generally amended the Fees Schedule so that the majority of the existing transactions fees and programs currently applicable to trading in SPX would also apply to trading in SPESG. However, it inadvertently did not include SPESG in the Customer Large Trade Discount along with SPX (and SPXW). As a result, SPESG currently falls under the transaction fees discount for ''All Other Options'' (which charges for only the first 5,000 contracts per order), where the Exchange had instead intended it to receive the same transaction fees discount as SPX (which charges for only the first 20,000 contracts per order), consistent with amendments made to accommodate SPESG throughout the proposal. Therefore, the proposed rule change amends the Customer Large Trade Discount to correct this inadvertent omission and apply the same Customer Large Trade Discount to SPESG as SPX going forward.

Proposed To Amend the Application of the Strategy Cap

By way of background, last month, the Exchange submitted a proposal that amended footnote 13 and updated the strategy cap from applying to strategies executed on the same trading day in the same option class for options on equities, ETFs and ETN to applying to strategies executed in open outcry on the same trading day in the same option class across all symbols.[12] The Exchange notes that in the proposal it incorrectly applied the cap to strategies executed in open outcry on the same trading day in the same options across all symbols where, instead, the proposal was originally intended to clarify that the strategy cap would apply to strategies executed in open outcry on the same trading day in the same options classes across all symbols in equity, ETF and ETN options, as opposed to on a symbol by symbol basis. As such, the proposed rule change reapplies the strategy cap to executions (in open outcry) in equities, ETFs and ETNs, as was in place prior to just last month, and updates footnote 13 to clarify that the cap applies across all symbols within equity, ETF and ETN options. Specifically, proposed footnote 13 provides that Market-Maker, Clearing Trading Permit Holder, JBO participant, broker-dealer and non-Trading Permit Holder market-maker transaction fees are capped at $0.00 for all merger, short stock interest, reversal, conversion and jelly roll strategies executed in open outcry on the same trading day in the same option class across all symbols in equities, ETFs and ETNs.[13]

2. Statutory Basis

The Exchange believes the proposed rule change is consistent with the Securities Exchange Act of 1934 (the ''Act'') and the rules and regulations thereunder applicable to the Exchange and, in particular, the requirements of Section 6(b) of the Act.[14] Specifically, the Exchange believes the proposed rule change is consistent with the Section 6(b)(5)[15] requirements that the rules of an exchange be designed to prevent fraudulent and manipulative acts and practices, to promote just and equitable principles of trade, to foster cooperation and coordination with persons engaged in regulating, clearing, settling, processing information with respect to, and facilitating transactions in securities, to remove impediments to and perfect the mechanism of a free and open market and a national market system, and, in general, to protect investors and the public interest. Additionally, the Exchange believes the proposed rule change is consistent with Section 6(b)(4) of the Act,[16] which requires that Exchange rules provide for the equitable allocation of reasonable dues, fees, and other charges among its Trading Permit Holders and other persons using its facilities.

As stated above, the Exchange operates in a highly competitive market in which market participants can readily direct order flow to competing venues if they deem fee levels at a particular venue to be excessive or incentives to be insufficient. Many of the proposed fee changes reflect a competitive pricing structure designed to incentivize market participants to direct their order flow to the Exchange's trading floor, which the Exchange believes would enhance market quality to the benefit of all TPHs. Particularly, the Exchange believes that its proposed amendment to the application of certain programs and assessments of Market-Maker volume executed in open outcry and the proposed $55,000 Clearing Trading Permit Holder Fee Cap are consistent with Section 6(b)(4) of the Act in that the proposed rule changes are reasonable, equitable and not unfairly discriminatory. As noted above, the Exchange operates in highly competitive market. The Exchange is only one of several options venues to which market participants may direct their order flow, and it represents a small percentage of the overall market. The Exchange believes that the proposed fees are reasonable, equitable, and not unfairly discriminatory in that competing options exchanges, and the Exchange itself, offer fees and credits in connection with Market-Maker transactions in open outcry[17] or firm fee caps,[18] as the Exchange now proposes. The Exchange believes that the ever-shifting market share among the exchanges from month to month demonstrates that market participants can shift order flow or discontinue or reduce use of certain categories of products, in response to fee changes. Accordingly, competitive forces constrain options exchange transaction fees. Stated otherwise, changes to exchange transaction fees can have a direct effect on the ability of an exchange to compete for order flow. The

[11] *See* Securities Exchange Act Release No. 90093 (October 5, 2020) (SR–CBOE–2020–088).

[12] *See* Securities Exchange Act Release No. 89831 (September 11, 2020), 85 FR 58096 (September 17, 2020) (SR–CBOE–2020–084).

[13] The proposed rule change also removes footnote 13 incorrectly appended to ''Rate Table—Underlying Symbol List A''.

[14] 15 U.S.C. 78f(b).

[15] 15 U.S.C. 78f(b)(5).

[16] 15 U.S.C. 78f(b)(4).

[17] *See supra* notes 6 and 7.

[18] *See supra* note 10.

Exchange amends its Fees Schedule accordingly to respond to this competitive marketplace.

Proposed Removal of Market-Maker Floor Volume From Assessment of Marketing Fees

The Exchange believes that the proposed rule change to amend the Marketing Fees table by adding transactions in open outcry to the list of Market-Maker transactions to which the Marketing Fee does not apply is reasonable because the current assessment of such orders has not resulted in significant incentive in attracting customer order flow to the trading floor as designed. Therefore, the proposed rule change is reasonable in that it removes this assessment for such transactions, which will allow the Exchange to redirect such resources and funding into other programs intended to incentivize customer order flow providers. Impactful incentive programs for customer order flow providers would, in turn, encourage an increase in customer order flow, which attracts Market-Makers. A subsequent increase in Market-Maker activity tends to signal an increase in activity from other market participants, contributing to overall deeper, more liquid markets and a robust market ecosystem to the benefit of all market participants. The Exchange believes the proposed rule change is equitable and not unfairly discriminatory because the proposed rule change will apply equally to all Market-Maker volume in open outcry, in that, no such volume will be assessed, or otherwise a part of, the Marketing Fee program. Also, as described above, the proposed rule change is reasonable, equitable and not unfairly discriminatory as the Marketing Fee program, as proposed, is also in line with how other exchanges with trading floors apply their respective marketing fee programs.[19]

Proposed Fee Code for Market-Maker Volume Executed on the Trading Floor

The Exchange believes that the proposed rule change to adopt a fee code and assess a standard rate for Market-Maker manual orders is reasonable in that it is reasonably designed to balance the assessment of fees on such orders in light of the removal of the assessment of Marketing Fees on such orders as proposed. The Exchange believes that the proposed rule change is equitable and not unfairly discriminatory because the proposed fee will apply automatically and uniformly to all Market-Maker orders transacted in open outcry (*i.e.,* manual). Additionally, the proposed rule change is reasonable, equitable and not unfairly discriminatory because it is consistent with the manner in which other options exchanges with trading floors currently assess different standard rates between manual and electronic Market-Maker volume.[20]

Proposed Removal of Market-Maker Floor Volume Eligibility Under Certain Programs

The proposed rule change to remove Market-Maker volume transacted in open outcry from eligibility for credits pursuant to the Liquidity Provider Sliding Scale and the AVP is reasonable because it is also reasonably designed to balance against the increased benefit to Market-Makers as a result of not assessing Marketing Fees for Market-Maker volume in open outcry, which, the Exchange believes that even with the proposed standard fee applied, may result in reduced overall transaction fees for Market-Makers executing volume on the trading floor. The Exchange also believes that it is reasonable to continue to include Market-Maker open outcry volume in the volume thresholds for meeting the Liquidity Provider Sliding Scale tiers because, as stated above, it is designed to continue to incentivize Market-Maker order flow to the trading floor and would assist the Exchange in continuing to provide a robust hybrid market. Particularly, Market-Maker volume in open outcry facilitates tighter spreads on the Exchange and signals additional corresponding increase in order flow from other market participants. Increased overall order flow benefits all investors by deepening the Exchange's liquidity pool, potentially providing even greater execution incentives and opportunities, offering additional flexibility for all investors to enjoy cost savings, supporting the quality of price discovery, promoting market transparency and improving investor protection. The Exchange notes, too, that other programs in the Fees Schedule include certain volume in meeting volume thresholds while not including the same volume as eligible for credits or reduced rates under such programs.[21] The proposed rule change is equitable and not unfairly discriminatory because the proposed rule change will apply equally to all Market-Maker volume in open outcry, in that, no such volume will be allotted credits under the Liquidity Provider Sliding Scale Program or AVP.

Proposed Amendment to Clearing Trading Permit Holder Fee Cap

The Exchange believes that the proposed reduction in the Clearing Trading Permit Holder Fee Cap amount is reasonably designed to incentivize Firms to increase their order flow submitted to the Exchange in order to meet, and trade beyond, the reduced cap, particularly given the recent observation of Firm volume decline across the industry. As stated above, increases in order flow contributes to deeper, more liquid markets and an increase in overall trading activity. The Exchange further believes that Clearing Trading Permit Holder participation in the markets is essential to a robust market ecosystem as Clearing Trading Permit Holders facilitate the execution of customer orders as well as provide clearing services. The Exchange believes that the proposed fee cap is equitable and reasonable as it will continue to apply uniformly to all Clearing Permit Holders that submit qualifying volume to meet the cap. Additionally, the Exchange notes that the proposed cap change is competitive with similar firm caps in place on other options exchanges.[22]

Proposed Reinstatement of Certain Facility Fees

The Exchange believes that reinstating the facility fees for the use of booths (as occupied) and wireless phones is reasonable as the Exchange has recently expanded its trading floor capacity, though continues to operate in a modified state, and therefore these facilities are once again being used by Trading Permit Holders. The Exchange believes the proposed rule change is also reasonable, equitable and not unfairly discriminatory as it applies equally to all floor TPHs use such services.

Proposed Addition of SPESG to the Rate Provided for SPX in the Large Customer Discount Program

The proposed rule change to add SPESG to the same existing transaction fees that apply to SPX under the Customer Large Trade Discount is reasonable as it is intended to correct an inadvertent omission of such via a recent proposal which amended the

[19] *See supra* note 6.

[20] *See supra* note 7.

[21] *See e.g.,* Cboe Options Fees Schedule, Volume Incentive Program (VIP) table (which counts volume for capacity B, J and U towards tier qualification but not as eligible for the VIP credit), and Cboe Options Clearing Trading Permit Holder Proprietary Products Sliding Scale table (which counts volume in products not included in Underlying Symbol List A towards reaching the tiers, but provides reduced rates to volume in products included in Underlying Symbol List A).

[22] *See supra* note 10.

Fees Schedule so that the majority of the existing transactions fees and programs currently applicable to trading in SPX would also apply to trading in SPESG.[23] The Exchange also believes, and as stated in the recent proposal, it is reasonable to apply the same discount to SPESG as it currently does to SPX because of the relation between the S&P 500 ESG Index and the S&P 500 Index, wherein each constituent of a S&P 500 ESG Index is a constituent of the S&P 500 Index. The proposed rule change does not alter any of the current rates under the Customer Large Trade Discount. Moreover, the proposed rule change is equitable and not unfairly discriminatory because all customer orders in SPESG will be charged equally up to the first 20,000 contracts per order just as they are today for orders in SPX.

Proposed To Amend the Application of the Strategy Cap

The Exchange believes that the proposed rule change to re-apply the strategy fee cap to open outcry executions in equity, ETF and ETN options is reasonable because it corrects the Fees Schedule to reflect the original intention of the recent proposal that updated the strategy caps and footnote 13,[24] and because, just until month ago, the cap applied exclusively to equities, ETFs and ETNs. By way of background, last month, the Exchange submitted a proposal that amended footnote 13 and updated the strategy cap from applying to strategies executed on the same trading day in the same option class for options on equities, ETFs and ETN to applying to strategies executed in open outcry on the same trading day in the same option class across all symbols.[25] The proposed rule change is reasonably designed to provide additional clarity in the Fees Schedule and mitigate any potential confusion regarding the application of the strategy cap to strategies executed in open outcry across all symbols in equity, ETF and ETN options (rather than an alternative reading that such might apply on a symbol by symbol basis). The proposed rule change does not alter the amount of the current strategy fee cap and will continue to be uniformly available to all similarly situated market participants, that is, all market-makers, Clearing Trading Permit Holders, JBO participants, broker-dealers and non-Trading Permit Holders that execute strategies in any class of equity, ETF or ETN options in open outcry will continue to be eligible to for the cap, thus, will continue to equally receive no charge on such orders.

B. Self-Regulatory Organization's Statement on Burden on Competition

The Exchange does not believe that the proposed rule change will impose any burden on intramarket or intermarket competition that is not necessary or appropriate in furtherance of the purposes of the Act.

The Exchange does not believe that the proposed rule change will impose any burden on intramarket competition that is not necessary or appropriate in furtherance of the purposes of the Act. Particularly, the proposed change regarding Market-Maker volume in open outcry will apply uniformly to all such volume. That is, all Market-Makers that transact orders on the trading floor will not be assessed the Marketing Fee on such orders, such orders will uniformly not be eligible for credits under the Liquidity Provider Sliding Scale or AVP, and such orders will automatically and uniformly yield fee code MB and be assessed the standard rebate for MB. Likewise, the Clearing Trading Permit Holder Fee Cap will continue to apply uniformly, as it does today, to all Firms that submit qualifying orders to reach the cap. The proposed rule change merely reduces the cap as an incentive for Clearing Trading Permit Holders to submit additional liquidity to the Exchange, which would benefit all market participants. The Exchange notes that the remaining proposed rule changes do not alter any of the current fees in place. The proposed rule change to reinstate certain facilities fees will apply equally to all floor Trading Permit Holders utilizing such facility services, the proposed rule change to the Customer Large Trade Discount table will apply equally to all customer orders in SPESG, exactly as it does today for such orders in SPX, and the proposed rule change to re-apply the strategy cap to strategies executed in certain products will apply uniformly to all market-makers, Clearing Trading Permit Holders, JBO participants, broker-dealers and non-Trading Permit Holders that execute strategies in open outcry across all symbols in equity, ETF and ETN options.

The Exchange does not believe that the proposed rule change will impose any burden on intermarket competition that is not necessary or appropriate in furtherance of the purposes of the Act because, as noted above, competing options exchanges, and the Exchange, currently have substantially similar fees in place in connection with Market-Maker orders executed in open outcry and firm fee caps. The Exchange notes it operates in a highly competitive market. In addition to Cboe Options, TPHs have numerous alternative venues that they may participate on and director their order flow, including 15 other options exchanges, as well as off-exchange venues, where competitive products are available for trading. Based on publicly available information, no single options exchange has more than 18% of the market share of executed volume of options trades.[26] Therefore, no exchange possesses significant pricing power in the execution of option order flow. Moreover, the Commission has repeatedly expressed its preference for competition over regulatory intervention in determining prices, products, and services in the securities markets. Specifically, in Regulation NMS, the Commission highlighted the importance of market forces in determining prices and SRO revenues and, also, recognized that current regulation of the market system ''has been remarkably successful in promoting market competition in its broader forms that are most important to investors and listed companies.'' [27] The fact that this market is competitive has also long been recognized by the courts. In *NetCoalition* v. *Securities and Exchange Commission,* the D.C. Circuit stated as follows: ''[n]o one disputes that competition for order flow is 'fierce.' . . . As the SEC explained, '[i]n the U.S. national market system, buyers and sellers of securities, and the broker-dealers that act as their order-routing agents, have a wide range of choices of where to route orders for execution'; [and] 'no exchange can afford to take its market share percentages for granted' because 'no exchange possesses a monopoly, regulatory or otherwise, in the execution of order flow from broker dealers' . . . .''.[28] Accordingly, the Exchange does not believe its proposed changes to the incentive programs impose any burden on competition that is not necessary or appropriate in furtherance of the purposes of the Act.

The Exchange does not believe that the proposed rule change in connection with the waiver of certain designated facility service fees will impose any burden on intermarket competition that is not necessary or appropriate in furtherance of the purposes of the Act because the proposed changes only

[23] *See supra* note 11.

[24] *See supra* note 12.

[25] *See* Securities Exchange Act Release No. 89831 (September 11, 2020), 85 FR 58096 (September 17, 2020) (SR–CBOE–2020–084).

[26] *See* supra note 4.

[27] See Securities Exchange Act Release No. 51808 (June 9, 2005), 70 FR 37496, 37499 (June 29, 2005).

[28] *NetCoalition* v. *SEC,* 615 F.3d 525, 539 (D.C. Cir. 2010) (quoting Securities Exchange Act Release No. 59039 (December 2, 2008), 73 FR 74770, 74782–83 (December 9, 2008) (SR–NYSEArca–2006–21)).

affect trading on the Exchange in limited circumstances.

C. Self-Regulatory Organization's Statement on Comments on the Proposed Rule Change Received From Members, Participants, or Others

The Exchange neither solicited nor received comments on the proposed rule change.

III. Date of Effectiveness of the Proposed Rule Change and Timing for Commission Action

The foregoing rule change has become effective pursuant to Section 19(b)(3)(A) of the Act [29] and paragraph (f) of Rule 19b–4 [30] thereunder. At any time within 60 days of the filing of the proposed rule change, the Commission summarily may temporarily suspend such rule change if it appears to the Commission that such action is necessary or appropriate in the public interest, for the protection of investors, or otherwise in furtherance of the purposes of the Act. If the Commission takes such action, the Commission will institute proceedings to determine whether the proposed rule change should be approved or disapproved.

IV. Solicitation of Comments

Interested persons are invited to submit written data, views and arguments concerning the foregoing, including whether the proposed rule change is consistent with the Act. Comments may be submitted by any of the following methods:

Electronic Comments

- Use the Commission's internet comment form (*http://www.sec.gov/rules/sro.shtml*); or
- Send an email to *rule-comments@sec.gov.* Please include File Number SR–CBOE–2020–097 on the subject line.

Paper Comments

- Send paper comments in triplicate to Secretary, Securities and Exchange Commission, 100 F Street NE, Washington, DC 20549–1090.

All submissions should refer to File Number SR–CBOE–2020–097. This file number should be included on the subject line if email is used. To help the Commission process and review your comments more efficiently, please use only one method. The Commission will post all comments on the Commission's internet website (*http://www.sec.gov/rules/sro.shtml*). Copies of the submission, all subsequent amendments, all written statements with respect to the proposed rule change that are filed with the Commission, and all written communications relating to the proposed rule change between the Commission and any person, other than those that may be withheld from the public in accordance with the provisions of 5 U.S.C. 552, will be available for website viewing and printing in the Commission's Public Reference Room, 100 F Street NE, Washington, DC 20549, on official business days between the hours of 10:00 a.m. and 3:00 p.m. Copies of the filing also will be available for inspection and copying at the principal office of the Exchange. All comments received will be posted without change. Persons submitting comments are cautioned that we do not redact or edit personal identifying information from comment submissions. You should submit only information that you wish to make available publicly. All submissions should refer to File Number SR–CBOE–2020–097 and should be submitted on or before November 16, 2020.

For the Commission, by the Division of Trading and Markets, pursuant to delegated authority.[31]

J. Matthew DeLesDernier,

Assistant Secretary.

[FR Doc. 2020–23574 Filed 10–23–20; 8:45 am]

BILLING CODE 8011–01–P

[29] 15 U.S.C. 78s(b)(3)(A).

[30] 17 CFR 240.19b–4(f).

[31] 17 CFR 200.30–3(a)(12).

SECURITIES AND EXCHANGE COMMISSION

[Release No. 34–90233; File No. SR–CboeEDGX–2020–051]

Self-Regulatory Organizations; Cboe EDGX Exchange, Inc.; Notice of Filing and Immediate Effectiveness of a Proposed Rule Change To Extend the Current Pilot Program Related to EDGX Rule 11.15, Clearly Erroneous Executions, to the Close of Business on April 20, 2021

October 20, 2020.

Pursuant to Section 19(b)(1) of the Securities Exchange Act of 1934 (''Act''),[1] and Rule 19b–4 thereunder,[2] notice is hereby given that on October 19, 2020, Cboe EDGX Exchange, Inc. (''Exchange'' or ''EDGX'') filed with the Securities and Exchange Commission (''Commission'') the proposed rule change as described in Items I and II below, which Items have been prepared by the Exchange. The Commission is publishing this notice to solicit comments on the proposed rule change from interested persons.

I. Self-Regulatory Organization's Statement of the Terms of Substance of the Proposed Rule Change

Cboe EDGX Exchange, Inc. (''EDGX'' or the ''Exchange'') is filing with the Securities and Exchange Commission (the ''Commission'') a proposed rule change to extend the current pilot program related to EDGX Rule 11.15, Clearly Erroneous Executions, to the close of business on April 20, 2021. The text of the proposed rule change is provided in Exhibit 5.

The text of the proposed rule change is also available on the Exchange's website (*http://markets.cboe.com/us/options/regulation/rule_filings/edgx/*), at the Exchange's Office of the Secretary, and at the Commission's Public Reference Room.

II. Self-Regulatory Organization's Statement of the Purpose of, and Statutory Basis for, the Proposed Rule Change

In its filing with the Commission, the Exchange included statements concerning the purpose of and basis for the proposed rule change and discussed any comments it received on the proposed rule change. The text of these statements may be examined at the places specified in Item IV below. The Exchange has prepared summaries, set forth in sections A, B, and C below, of the most significant aspects of such statements.

A. Self-Regulatory Organization's Statement of the Purpose of, and Statutory Basis for, the Proposed Rule Change

1. Purpose

The purpose of this filing is to extend the effectiveness of the Exchange's current rule applicable to Clearly Erroneous Executions to the close of business on April 20, 2021. Portions of Rule 11.15, explained in further detail below, are currently operating as a pilot program set to expire on October 20, 2020.[3]

On September 10, 2010, the Commission approved, on a pilot basis, changes to EDGX Rule 11.15 that, among other things: (i) Provided for uniform treatment of clearly erroneous execution reviews in multi-stock events involving twenty or more securities; and (ii) reduced the ability of the Exchange to deviate from the

[1] 15 U.S.C. 78s(b)(1).

[2] 17 CFR 240.19b–4.

[3] *See* Securities Exchange Act Release No. 88500 (March 27, 2020), 85 FR 18628 (April 2, 2020) (SR–CboeEDGX–2020–013).

objective standards set forth in the rule.[4] In 2013, the Exchange adopted a provision designed to address the operation of the Plan.[5] Finally, in 2014, the Exchange adopted two additional provisions providing that: (i) A series of transactions in a particular security on one or more trading days may be viewed as one event if all such transactions were effected based on the same fundamentally incorrect or grossly misinterpreted issuance information resulting in a severe valuation error for all such transactions; and (ii) in the event of any disruption or malfunction in the operation of the electronic communications and trading facilities of an Exchange, another SRO, or responsible single plan processor in connection with the transmittal or receipt of a trading halt, an Officer, acting on his or her own motion, shall nullify any transaction that occurs after a trading halt has been declared by the primary listing market for a security and before such trading halt has officially ended according to the primary listing market.[6]

On December 26, 2018, the Commission published the proposed Eighteenth Amendment[7] to the Plan to Address Extraordinary Market Volatility Pursuant to Rule 608 of Regulation NMS under the Act (the ''Limit Up-Limit Down Plan'' or the ''Plan'')[8] to allow the Plan to operate on a permanent, rather than pilot, basis. On April 8, 2019, the Exchange amended EDGX Rule 11.15 to untie the pilot program's effectiveness from that of the Plan and to extend the pilot's effectiveness to the close of business on October 18, 2019 in order allow the Exchange and other national securities exchanges additional time to consider further amendments, if any, to the clearly erroneous execution rules in light of the proposed Eighteenth Amendment to the Plan.[9] On April 17, 2019, the Commission published an approval of the Eighteenth Amendment to allow the Plan to operate on a permanent, rather than pilot, basis.[10] On October 21, 2019, the Exchange amended EDGX Rule 11.15 to extend the pilot's effectiveness to the close of business on April 20, 2020.[11] Finally, on March 18, 2020, the Exchange amended EDGX Rule 11.15 to extend the pilot's effectiveness to the close of business on October 20, 2020.[12]

The Exchange now proposes to amend EDGX Rule 11.15 to extend the pilot's effectiveness to the close of business on April 20, 2021. The Exchange understands that the other national securities exchanges and Financial Industry Regulatory Authority (''FINRA'') will also file similar proposals to extend their respective clearly erroneous execution pilot programs, the substance of which are identical to EDGX Rule 11.15.

The Exchange does not propose any additional changes to EDGX Rule 11.15. The Exchange believes the benefits to market participants from the more objective clearly erroneous executions rule should continue on a limited six month pilot basis. As the Plan was approved by the Commission to operate on a permanent, rather than pilot, basis the Exchange intends to assess whether additional changes should also be made to the operation of the clearly erroneous execution rules. Extending the effectiveness of EDGX Rule 11.15 for an additional six months should provide the Exchange and other national securities exchanges additional time to consider further amendments, if any, to the clearly erroneous execution rules.

2. Statutory Basis

The Exchange believes the proposed rule change is consistent with the Securities Exchange Act of 1934 (the ''Act'') and the rules and regulations thereunder applicable to the Exchange and, in particular, the requirements of Section 6(b) of the Act.[13] Specifically, the Exchange believes the proposed rule change is consistent with the Section 6(b)(5)[14] requirements that the rules of an exchange be designed to prevent fraudulent and manipulative acts and practices, to promote just and equitable principles of trade, to foster cooperation and coordination with persons engaged in regulating, clearing, settling, processing information with respect to, and facilitating transactions in securities, to remove impediments to and perfect the mechanism of a free and open market and a national market system, and, in general, to protect investors and the public interest. Additionally, the Exchange believes the proposed rule change is consistent with the Section 6(b)(5)[15] requirement that the rules of an exchange not be designed to permit unfair discrimination between customers, issuers, brokers, or dealers.

In particular, the Exchange believes that extending the clearly erroneous execution pilot under EDGX Rule 11.15 for an additional six months would help assure that the determination of whether a clearly erroneous trade has occurred will be based on clear and objective criteria, and that the resolution of the incident will occur promptly through a transparent process. The proposed rule change would also help assure consistent results in handling erroneous trades across the U.S. equities markets, thus furthering fair and orderly markets, the protection of investors and the public interest. Based on the foregoing, the Exchange believes the amended clearly erroneous executions rule should continue to be in effect on a pilot basis while the Exchange and the other national securities exchanges consider and develop a permanent proposal for clearly erroneous execution reviews.

B. Self-Regulatory Organization's Statement on Burden on Competition

The Exchange does not believe that the proposed rule change would impose any burden on competition that is not necessary or appropriate in furtherance of the purposes of the Act. To the contrary, the Exchange understands that FINRA and other national securities exchanges will also file similar proposals to extend their respective clearly erroneous execution pilot programs. Thus, the proposed rule change will help to ensure consistency across market centers without implicating any competitive issues.

C. Self-Regulatory Organization's Statement on Comments on the Proposed Rule Change Received From Members, Participants, or Others

No comments were solicited or received on the proposed rule change.

III. Date of Effectiveness of the Proposed Rule Change and Timing for Commission Action

Because the foregoing proposed rule change does not: (i) Significantly affect the protection of investors or the public interest; (ii) impose any significant burden on competition; and (iii) become

[4] *See* Securities Exchange Act Release No. 62886 (September 10, 2010), 75 FR 56613 (September 16, 2010) (SR–EDGX–2010–03).

[5] *See* Securities Exchange Act Release No. 68814 (February 1, 2013), 78 FR 9086 (February 7, 2013) (SR–EDGX–2013–06).

[6] *See* Securities Exchange Act Release No. 72434 (June 19, 2014), 79 FR 36110 (June 25, 2014) (SR–EDGX–2014–12).

[7] *See* Securities Exchange Act Release No. 84843 (December 18, 2018), 83 FR 66464 (December 26, 2018) (File No. 4–631) (''Eighteenth Amendment'').

[8] *See* Securities Exchange Act Release No. 67091 (May 31, 2012), 77 FR 33498 (June 6, 2012) (the ''Limit Up-Limit Down Release'').

[9] *See* Securities Exchange Act Release No. 87364 (April 10, 2019), 84 FR 15652 (April 16, 2019) (SR–CboeEDGX–2019–018).

[10] *See* Securities Exchange Act Release No. 85623 (April 11, 2019), 84 FR 16086 (April 17, 2019) (File No. 4–631).

[11] *See* Securities Exchange Act Release No. 87367 (October 21, 2019), 84 FR 57519 (October 25, 2019) (SR–CboeEDGX–2019–062).

[12] *See* supra note 5.

[13] 15 U.S.C. 78f(b).

[14] 15 U.S.C. 78f(b)(5).

[15] *Id.*

operative for 30 days from the date on which it was filed, or such shorter time as the Commission may designate, it has become effective pursuant to Section 19(b)(3)(A) of the Act [16] and Rule 19b–4(f)(6) thereunder.[17]

A proposed rule change filed under Rule 19b–4(f)(6) [18] normally does not become operative prior to 30 days after the date of the filing. However, Rule 19b–4(f)(6)(iii) [19] permits the Commission to designate a shorter time if such action is consistent with the protection of investors and the public interest. The Exchange has asked the Commission to waive the 30-day operative delay so that the proposed rule change may become effective and operative immediately upon filing. The Commission believes that waiving the 30-day operative delay is consistent with the protection of investors and the public interest, as it will allow the current clearly erroneous execution pilot program to continue uninterrupted, without any changes, while the Exchange and the other national securities exchanges consider a permanent proposal for clearly erroneous execution reviews. For this reason, the Commission hereby waives the 30-day operative delay and designates the proposed rule change as operative upon filing.[20]

At any time within 60 days of the filing of the proposed rule change, the Commission summarily may temporarily suspend such rule change if it appears to the Commission that such action is necessary or appropriate in the public interest, for the protection of investors, or otherwise in furtherance of the purposes of the Act. If the Commission takes such action, the Commission shall institute proceedings to determine whether the proposed rule should be approved or disapproved.

IV. Solicitation of Comments

Interested persons are invited to submit written data, views, and arguments concerning the foregoing, including whether the proposed rule change is consistent with the Act.

[16] 15 U.S.C. 78s(b)(3)(A).

[17] 17 CFR 240.19b–4(f)(6). In addition, Rule 19b–4(f)(6)(iii) requires a self-regulatory organization to give the Commission written notice of its intent to file the proposed rule change, along with a brief description and text of the proposed rule change, at least five business days prior to the date of filing of the proposed rule change, or such shorter time as designated by the Commission. The Exchange has satisfied this requirement.

[18] 17 CFR 240.19b–4(f)(6).

[19] 17 CFR 240.19b–4(f)(6)(iii).

[20] For purposes only of waiving the 30-day operative delay, the Commission has also considered the proposed rule's impact on efficiency, competition, and capital formation. *See* 15 U.S.C. 78c(f).

Comments may be submitted by any of the following methods:

Electronic Comments

- Use the Commission's internet comment form (*http://www.sec.gov/rules/sro.shtml*); or
- Send an email to *rule-comments@sec.gov.* Please include File Number SR–CboeEDGX–2020–051 on the subject line.

Paper Comments

- Send paper comments in triplicate to Secretary, Securities and Exchange Commission, 100 F Street NE, Washington, DC 20549–1090.

All submissions should refer to File Number SR–CboeEDGX–2020–051. This file number should be included on the subject line if email is used. To help the Commission process and review your comments more efficiently, please use only one method. The Commission will post all comments on the Commission's internet website (*http://www.sec.gov/rules/sro.shtml*). Copies of the submission, all subsequent amendments, all written statements with respect to the proposed rule change that are filed with the Commission, and all written communications relating to the proposed rule change between the Commission and any person, other than those that may be withheld from the public in accordance with the provisions of 5 U.S.C. 552, will be available for website viewing and printing in the Commission's Public Reference Room, 100 F Street NE, Washington, DC 20549, on official business days between the hours of 10:00 a.m. and 3:00 p.m. Copies of the filing also will be available for inspection and copying at the principal office of the Exchange. All comments received will be posted without change. Persons submitting comments are cautioned that we do not redact or edit personal identifying information from comment submissions. You should submit only information that you wish to make available publicly. All submissions should refer to File Number SR–CboeEDGX–2020–051 and should be submitted on or before November 16, 2020.

For the Commission, by the Division of Trading and Markets, pursuant to delegated authority.[21]

J. Matthew DeLesDernier,

Assistant Secretary.

[FR Doc. 2020–23575 Filed 10–23–20; 8:45 am]

BILLING CODE 8011–01–P

[21] 17 CFR 200.30–3(a)(12).

SECURITIES AND EXCHANGE COMMISSION

[Release No. 34–90231; File No. SR–CboeBZX–2020–077]

Self-Regulatory Organizations; Cboe BZX Exchange, Inc.; Notice of Filing and Immediate Effectiveness of a Proposed Rule Change To Extend the Current Pilot Program Related to BZX Rule 11.17, Clearly Erroneous Executions, to the Close of Business on April 20, 2021

October 20, 2020.

Pursuant to Section 19(b)(1) of the Securities Exchange Act of 1934 (''Act''),[1] and Rule 19b–4 thereunder,[2] notice is hereby given that on October 19, 2020, Cboe BZX Exchange, Inc. (''Exchange'' or ''BZX'') filed with the Securities and Exchange Commission (''Commission'') the proposed rule change as described in Items I and II below, which Items have been prepared by the Exchange. The Commission is publishing this notice to solicit comments on the proposed rule change from interested persons.

I. Self-Regulatory Organization's Statement of the Terms of Substance of the Proposed Rule Change

Cboe BZX Exchange, Inc. (''BZX'' or the ''Exchange'') is filing with the Securities and Exchange Commission (the ''Commission'') a proposed rule change to extend the current pilot program related to BZX Rule 11.17, Clearly Erroneous Executions, to the close of business on April 20, 2021. The text of the proposed rule change is provided in Exhibit 5.

The text of the proposed rule change is also available on the Exchange's website (*http://markets.cboe.com/us/equities/regulation/rule_filings/bzx/*), at the Exchange's Office of the Secretary, and at the Commission's Public Reference Room.

II. Self-Regulatory Organization's Statement of the Purpose of, and Statutory Basis for, the Proposed Rule Change

In its filing with the Commission, the Exchange included statements concerning the purpose of and basis for the proposed rule change and discussed any comments it received on the proposed rule change. The text of these statements may be examined at the places specified in Item IV below. The Exchange has prepared summaries, set forth in sections A, B, and C below, of

[1] 15 U.S.C. 78s(b)(1).

[2] 17 CFR 240.19b–4.

the most significant aspects of such statements.

A. Self-Regulatory Organization's Statement of the Purpose of, and Statutory Basis for, the Proposed Rule Change

1. Purpose

The purpose of this filing is to extend the effectiveness of the Exchange's current rule applicable to Clearly Erroneous Executions to the close of business on April 20, 2021. Portions of Rule 11.17, explained in further detail below, are currently operating as a pilot program set to expire on October 20, 2020.[3]

On September 10, 2010, the Commission approved, on a pilot basis, changes to BZX Rule 11.17 that, among other things: (i) Provided for uniform treatment of clearly erroneous execution reviews in multi-stock events involving twenty or more securities; and (ii) reduced the ability of the Exchange to deviate from the objective standards set forth in the rule.[4] In 2013, the Exchange adopted a provision designed to address the operation of the Plan.[5] Finally, in 2014, the Exchange adopted two additional provisions providing that: (i) A series of transactions in a particular security on one or more trading days may be viewed as one event if all such transactions were effected based on the same fundamentally incorrect or grossly misinterpreted issuance information resulting in a severe valuation error for all such transactions; and (ii) in the event of any disruption or malfunction in the operation of the electronic communications and trading facilities of an Exchange, another SRO, or responsible single plan processor in connection with the transmittal or receipt of a trading halt, an Officer, acting on his or her own motion, shall nullify any transaction that occurs after a trading halt has been declared by the primary listing market for a security and before such trading halt has officially ended according to the primary listing market.[6]

On December 26, 2018, the Commission published the proposed Eighteenth Amendment[7] to the Plan to Address Extraordinary Market Volatility Pursuant to Rule 608 of Regulation NMS under the Act (the ''Limit Up-Limit Down Plan'' or the ''Plan'')[8] to allow the Plan to operate on a permanent, rather than pilot, basis. On April 8, 2019, the Exchange amended BZX Rule 11.17 to untie the pilot program's effectiveness from that of the Plan and to extend the pilot's effectiveness to the close of business on October 18, 2019 in order allow the Exchange and other national securities exchanges additional time to consider further amendments, if any, to the clearly erroneous execution rules in light of the proposed Eighteenth Amendment to the Plan.[9] On April 17, 2019, the Commission published an approval of the Eighteenth Amendment to allow the Plan to operate on a permanent, rather than pilot, basis.[10] On October 21, 2019, the Exchange amended BZX Rule 11.17 to extend the pilot's effectiveness to the close of business on April 20, 2020.[11] Finally, on March 18, 2020, the Exchange amended BZX Rule 11.17 to extend the pilot's effectiveness to the close of business on October 20, 2020.[12]

The Exchange now proposes to amend BZX Rule 11.17 to extend the pilot's effectiveness to the close of business on April 20, 2021. The Exchange understands that the other national securities exchanges and Financial Industry Regulatory Authority (''FINRA'') will also file similar proposals to extend their respective clearly erroneous execution pilot programs, the substance of which are identical to BZX Rule 11.17.

The Exchange does not propose any additional changes to BZX Rule 11.17. The Exchange believes the benefits to market participants from the more objective clearly erroneous executions rule should continue on a limited six month pilot basis. As the Plan was approved by the Commission to operate on a permanent, rather than pilot, basis the Exchange intends to assess whether additional changes should also be made to the operation of the clearly erroneous execution rules. Extending the effectiveness of BZX Rule 11.17 for an additional six months should provide the Exchange and other national securities exchanges additional time to consider further amendments, if any, to the clearly erroneous execution rules.

2. Statutory Basis

The Exchange believes the proposed rule change is consistent with the Securities Exchange Act of 1934 (the ''Act'') and the rules and regulations thereunder applicable to the Exchange and, in particular, the requirements of Section 6(b) of the Act.[13] Specifically, the Exchange believes the proposed rule change is consistent with the Section 6(b)(5)[14] requirements that the rules of an exchange be designed to prevent fraudulent and manipulative acts and practices, to promote just and equitable principles of trade, to foster cooperation and coordination with persons engaged in regulating, clearing, settling, processing information with respect to, and facilitating transactions in securities, to remove impediments to and perfect the mechanism of a free and open market and a national market system, and, in general, to protect investors and the public interest. Additionally, the Exchange believes the proposed rule change is consistent with the Section 6(b)(5)[15] requirement that the rules of an exchange not be designed to permit unfair discrimination between customers, issuers, brokers, or dealers.

In particular, the Exchange believes that extending the clearly erroneous execution pilot under BZX Rule 11.17 for an additional six months would help assure that the determination of whether a clearly erroneous trade has occurred will be based on clear and objective criteria, and that the resolution of the incident will occur promptly through a transparent process. The proposed rule change would also help assure consistent results in handling erroneous trades across the U.S. equities markets, thus furthering fair and orderly markets, the protection of investors and the public interest. Based on the foregoing, the Exchange believes the amended clearly erroneous executions rule should continue to be in effect on a pilot basis while the Exchange and the other national securities exchanges consider and develop a permanent proposal for clearly erroneous execution reviews.

[3] *See* Securities Exchange Act Release No. 88497 (March 27, 2020), 85 FR 18602 (April 2, 2020) (SR–CboeBZX–2020–026).

[4] *See* Securities Exchange Act Release No. 62886 (September 10, 2010), 75 FR 56613 (September 16, 2010) (SR–BATS–2010–016).

[5] *See* Securities Exchange Act Release No. 68797 (January 31, 2013), 78 FR 8635 (February 6, 2013) (SR–BATS–2013–008).

[6] *See* Securities Exchange Act Release No. 72434 (June 19, 2014), 79 FR 36110 (June 25, 2014) (SR–BATS–2014–014).

[7] *See* Securities Exchange Act Release No. 84843 (December 18, 2018), 83 FR 66464 (December 26, 2018) (File No. 4–631) (''Eighteenth Amendment'').

[8] *See* Securities Exchange Act Release No. 67091 (May 31, 2012), 77 FR 33498 (June 6, 2012) (the ''Limit Up-Limit Down Release'').

[9] *See* Securities Exchange Act Release No. 85543 (April 8, 2019), 84 FR 15018 (April 12, 2019) (SR–CboeBZX–2019–022).

[10] *See* Securities Exchange Act Release No. 85623 (April 11, 2019), 84 FR 16086 (April 17, 2019) (File No. 4–631).

[11] *See* Securities Exchange Act Release No. 87365 (October 21, 2019), 84 FR 57540 (October 25, 2019) (SR–CboeBZX–2019–089).

[12] *See supra* note 5.

[13] 15 U.S.C. 78f(b).

[14] 15 U.S.C. 78f(b)(5).

[15] *Id.*

B. Self-Regulatory Organization's Statement on Burden on Competition

The Exchange does not believe that the proposed rule change would impose any burden on competition that is not necessary or appropriate in furtherance of the purposes of the Act. To the contrary, the Exchange understands that FINRA and other national securities exchanges will also file similar proposals to extend their respective clearly erroneous execution pilot programs. Thus, the proposed rule change will help to ensure consistency across market centers without implicating any competitive issues.

C. Self-Regulatory Organization's Statement on Comments on the Proposed Rule Change Received From Members, Participants, or Others

No comments were solicited or received on the proposed rule change.

III. Date of Effectiveness of the Proposed Rule Change and Timing for Commission Action

Because the foregoing proposed rule change does not: (i) Significantly affect the protection of investors or the public interest; (ii) impose any significant burden on competition; and (iii) become operative for 30 days from the date on which it was filed, or such shorter time as the Commission may designate, it has become effective pursuant to Section 19(b)(3)(A) of the Act [16] and Rule 19b–4(f)(6) thereunder.[17]

A proposed rule change filed under Rule 19b–4(f)(6) [18] normally does not become operative prior to 30 days after the date of the filing. However, Rule 19b–4(f)(6)(iii) [19] permits the Commission to designate a shorter time if such action is consistent with the protection of investors and the public interest. The Exchange has asked the Commission to waive the 30-day operative delay so that the proposed rule change may become effective and operative immediately upon filing. The Commission believes that waiving the 30-day operative delay is consistent with the protection of investors and the public interest, as it will allow the current clearly erroneous execution pilot program to continue uninterrupted, without any changes, while the Exchange and the other national securities exchanges consider a permanent proposal for clearly erroneous execution reviews. For this reason, the Commission hereby waives the 30-day operative delay and designates the proposed rule change as operative upon filing.[20]

At any time within 60 days of the filing of the proposed rule change, the Commission summarily may temporarily suspend such rule change if it appears to the Commission that such action is necessary or appropriate in the public interest, for the protection of investors, or otherwise in furtherance of the purposes of the Act. If the Commission takes such action, the Commission shall institute proceedings to determine whether the proposed rule should be approved or disapproved.

IV. Solicitation of Comments

Interested persons are invited to submit written data, views, and arguments concerning the foregoing, including whether the proposed rule change is consistent with the Act. Comments may be submitted by any of the following methods:

Electronic Comments

- Use the Commission's internet comment form (*http://www.sec.gov/rules/sro.shtml*); or
- Send an email to *rule-comments@sec.gov.* Please include File Number SR–CboeBZX–2020–077 on the subject line.

Paper Comments

- Send paper comments in triplicate to Secretary, Securities and Exchange Commission, 100 F Street NE, Washington, DC 20549–1090.

All submissions should refer to File Number SR–CboeBZX–2020–077. This file number should be included on the subject line if email is used. To help the Commission process and review your comments more efficiently, please use only one method. The Commission will post all comments on the Commission's internet website (*http://www.sec.gov/rules/sro.shtml*). Copies of the submission, all subsequent amendments, all written statements with respect to the proposed rule change that are filed with the Commission, and all written communications relating to the proposed rule change between the Commission and any person, other than those that may be withheld from the public in accordance with the provisions of 5 U.S.C. 552, will be available for website viewing and printing in the Commission's Public Reference Room, 100 F Street NE, Washington, DC 20549, on official business days between the hours of 10:00 a.m. and 3:00 p.m. Copies of the filing also will be available for inspection and copying at the principal office of the Exchange. All comments received will be posted without change. Persons submitting comments are cautioned that we do not redact or edit personal identifying information from comment submissions. You should submit only information that you wish to make available publicly. All submissions should refer to File Number SR–CboeBZX–2020–077 and should be submitted on or before November 16, 2020.

For the Commission, by the Division of Trading and Markets, pursuant to delegated authority.[21]

J. Matthew DeLesDernier,

Assistant Secretary.

[FR Doc. 2020–23573 Filed 10–23–20; 8:45 am]

BILLING CODE 8011–01–P

[16] 15 U.S.C. 78s(b)(3)(A).

[17] 17 CFR 240.19b–4(f)(6). In addition, Rule 19b–4(f)(6)(iii) requires a self-regulatory organization to give the Commission written notice of its intent to file the proposed rule change, along with a brief description and text of the proposed rule change, at least five business days prior to the date of filing of the proposed rule change, or such shorter time as designated by the Commission. The Exchange has satisfied this requirement.

[18] 17 CFR 240.19b–4(f)(6).

[19] 17 CFR 240.19b–4(f)(6)(iii).

[20] For purposes only of waiving the 30-day operative delay, the Commission has also considered the proposed rule's impact on efficiency, competition, and capital formation. *See* 15 U.S.C. 78c(f).

[21] 17 CFR 200.30–3(a)(12).

SECURITIES AND EXCHANGE COMMISSION

[Investment Company Act Release No. 34054; 812–15139]

Primark Private Equity Investments Fund and Primark Advisors LLC

October 20, 2020.

AGENCY: Securities and Exchange Commission (''Commission'').

ACTION: Notice.

Notice of an application under section 6(c) of the Investment Company Act of 1940 (the ''Act'') for an exemption from sections 18(a)(2), 18(c) and 18(i) of the Act, under sections 6(c) and 23(c) of the Act for an exemption from rule 23c–3 under the Act, and for an order pursuant to section 17(d) of the Act and rule 17d–1 under the Act.

SUMMARY OF APPLICATION: Applicants request an order to permit certain registered closed-end management investment companies to issue multiple classes of shares and to impose early withdrawal charges and asset-based distribution fees and/or service fees with respect to certain classes.

APPLICANTS: Primark Private Equity Investments Fund (the ''Initial Fund'') and Primark Advisors LLC (the ''Adviser'' and together with the Initial Fund, the ''Applicants'').

FILING DATES: The application was filed on July 6, 2020, and amended on September 14, 2020 and October 6, 2020.

HEARING OR NOTIFICATION OF HEARING: An order granting the requested relief will be issued unless the Commission orders a hearing. Interested persons may request a hearing by emailing the Commission's Secretary at *Secretarys-Office@sec.gov* and serving Applicants with a copy of the request by email. Hearing requests should be received by the Commission by 5:30 p.m. on November 16, 2020 and should be accompanied by proof of service on the Applicants, in the form of an affidavit, or, for lawyers, a certificate of service. Pursuant to rule 0–5 under the Act, hearing requests should state the nature of the writer's interest, any facts bearing upon the desirability of a hearing on the matter, the reason for the request, and the issues contested. Persons who wish to be notified of a hearing may request notification by emailing to the Commission's Secretary at *Secretarys-Office@sec.gov.*

ADDRESSES: The Commission: *Secretarys-Office@sec.gov.* Applicants: c/o Michael Bell, by email to *mbell@primarkcapital.com,* Gregory C. Davis, by email to *gregory.davis@ropesgray.com* and Paulita A. Pike, by email to *paulita.pike@ropesgray.com.*

FOR FURTHER INFORMATION CONTACT: Marc Mehrespand, Senior Counsel; Trace Rakestraw, Branch Chief, at (202) 551–6825 (Division of Investment Management, Chief Counsel's Office).

SUPPLEMENTARY INFORMATION: The following is a summary of the application. The complete application may be obtained via the Commission's website by searching for the file number, or for an applicant using the Company name box, at *http://www.sec.gov/search/search.htm* or by calling (202) 551–8090.

Applicants' Representations

1. The Initial Fund is a Delaware statutory trust that is registered under the Act as a closed-end management investment company and operated as an interval fund pursuant to rule 23c–3 under the Act. The investment objective of the Initial Fund is to generate long-term capital appreciation. The Initial Fund pursues its investment objective primarily by investing in private equity investments.

2. The Adviser is a Delaware limited liability company and is an investment adviser registered with the Commission under the Investment Advisers Act of 1940. The Adviser serves as investment adviser to the Initial Fund.

3. Applicants seek an order to permit the Funds (as defined below) to issue multiple classes of shares, each having its own fee and expense structure and to impose early withdrawal charges (''EWCs'') and asset-based distribution and/or service fees with respect to certain classes.

4. Applicants request that the order also apply to any continuously-offered registered closed-end management investment company that has been previously organized or that may be organized in the future for which the Adviser or any entity controlling, controlled by, or under common control with the Adviser, or any successor in interest to any such entity,[1] acts as investment adviser and that operates as an interval fund pursuant to rule 23c–3 under the Act or provides periodic liquidity with respect to its shares pursuant to rule 13e–4 under the Securities Exchange Act of 1934, as amended (the ''Exchange Act'') (each, a ''Future Fund'' and together with the Initial Fund, the ''Funds'').[2]

5. The Initial Fund is currently offering its common shares of beneficial interest (''Initial Class Shares'') on a continuous basis. Applicants state that additional offerings by any Fund relying on the order may be on a private placement or public offering basis. Shares of the Funds will not be listed on any securities exchange, nor quoted on any quotation medium, and the Funds do not expect there to be a secondary trading market for their shares.

6. If the requested relief is granted, the Initial Fund intends to continuously offer at least one additional class of shares (''New Class Shares''). Each of the Initial Class Shares and the New Class Shares will have its own fee and expense structure. Because of the different distribution and/or service fees, services, and any other class expenses that may be attributable to each class of shares, the net income attributable to, and the dividends payable on, each class of shares may differ from each other.

7. Applicants state that, from time to time, the Funds may create additional classes of shares, the terms of which may differ from their other share classes in the following respects: (i) The amount of fees permitted by different distribution plans and/or different service fee arrangements; (ii) voting rights with respect to a distribution and/or service plan of a class; (iii) different class designations; (iv) the impact of any class expenses directly attributable to a particular class of shares allocated on a class basis as described in the application; (v) any differences in dividends and net asset value resulting from differences in fees under a distribution plan and/or service fee arrangement or in class expenses; (vi) any EWC or other sales load structure; and (vii) exchange or conversion privileges of the classes as permitted under the Act.

8. Applicants state that the Initial Fund has adopted a fundamental policy to repurchase a specified percentage of its shares (no less than 5% and no more than 25%) at net asset value on a periodic basis. Such repurchase offers will be conducted pursuant to rule 23c–3 under the Act. Each of the other Funds will likewise adopt fundamental investment policies and make periodic repurchase offers to its shareholders in compliance with rule 23c–3 or will provide periodic liquidity with respect to its shares pursuant to rule 13e–4 under the Exchange Act.[3] Any repurchase offers made by the Funds will be made to all holders of shares of each such Fund as of the selected record date.

9. Applicants represent that any asset-based service and/or distribution fees for each class of shares of the Funds will comply with the provisions of FINRA Rule 2341 (formerly NASD rule 2380(d)) (the ''FINRA Sales Charge Rule'').[4] Applicants also represent that each Fund will include in its prospectus disclosure the fees, expenses and other characteristics of each class of shares offered for sale by the prospectus, as is required for open-end multi-class funds under Form N–1A.[5] As is required for open-end funds, each Fund will disclose fund expenses borne by shareholders during the reporting period in shareholder reports, and describe in their prospectuses any arrangements that result in breakpoints in, or elimination of, sales loads.[6] In

[1] A successor in interest is limited to an entity that results from a reorganization into another jurisdiction or a change in the type of business organization.

[2] Applicants represent that any of the Funds relying on this relief in the future will do so in a manner consistent with the terms and conditions of the application. Applicants further represent that each entity presently intending to rely on the requested relief is listed as an Applicant.

[3] Applicants submit that rule 23c–3 and Regulation M under the Exchange Act permit an interval fund to make repurchase offers to repurchase its shares while engaging in a continuous offering of its shares pursuant to Rule 415 under the Securities Act of 1933, as amended.

[4] Any reference in the application to the FINRA Sales Charge Rule includes any successor or replacement to the FINRA Sales Charge Rule.

[5] In all respects other than class by class disclosure, each Fund will comply with the requirements of Form N–2.

[6] *See* Shareholder Reports and Quarterly Portfolio Disclosure of Registered Management Investment

addition, applicants will comply with applicable enhanced fee disclosure requirements for fund of funds.[7]

10. Each Fund will comply with any requirements that the Commission or FINRA may adopt regarding disclosure at the point of sale and in transaction confirmations about the costs and conflicts of interest arising out of the distribution of open-end investment company shares, and regarding prospectus disclosure of sales loads and revenue sharing arrangements, as if those requirements applied to each Fund. In addition, each Fund will contractually require that any distributor of the Fund's shares comply with such requirements in connection with the distribution of such Fund's shares.

11. Each Fund will allocate all expenses incurred by it among the various classes of shares based on the net assets of that Fund attributable to each such class, except that the net asset value and expenses of each class will reflect the expenses associated with the distribution and/or service plan of that class (if any), service fees attributable to that class (if any), including transfer agency fees, and any other incremental expenses of that class. Expenses of a Fund allocated to a particular class of shares will be borne on a pro rata basis by each outstanding share of that class. Applicants state that each Fund will comply with the provisions of rule 18f–3 under the Act as if it were an open-end investment company.

12. Applicants state that each Fund may impose an EWC on shares submitted for repurchase that have been held less than a specified period and may grant waivers of the EWCs on repurchases in connection with certain categories of shareholders or transactions established from time to time. Applicants state that each Fund will apply the EWC (and any waivers, scheduled variations or eliminations of the EWC) uniformly to all shareholders in a given class and consistently with the requirements of rule 22d–1 under the Act as if the Funds were open-end investment companies.

13. Each Fund that operates or will operate as an interval fund pursuant to rule 23c–3 under the Act may offer its shareholders an exchange feature under which the shareholders of the Fund may, in connection with such Fund's periodic repurchase offers, exchange their shares of the Fund for shares of the same class of (i) registered open-end investment companies or (ii) other registered closed-end investment companies that comply with rule 23c–3 under the Act and continuously offer their shares at net asset value, that are in the Fund's group of investment companies (collectively, the ''Other Funds''). Shares of a Fund operating pursuant to rule 23c–3 that are exchanged for shares of Other Funds will be included as part of the amount of the repurchase offer amount for such Fund as specified in rule 23c–3 under the Act. Any exchange option will comply with rule 11a–3 under the Act, as if the Fund were an open-end investment company subject to rule 11a–3. In complying with rule 11a–3, each Fund will treat an EWC as if it were a contingent deferred sales load (''CDSL'').

Applicants' Legal Analysis

Multiple Classes of Shares

1. Section 18(a)(2) of the Act provides that a closed-end investment company may not issue or sell a senior security that is a stock unless certain requirements are met. Applicants acknowledge that the creation of multiple classes of shares of the Funds may violate section 18(a)(2) because the Funds may not meet such requirements with respect to a class of shares that may be a senior security.

2. Section 18(c) of the Act provides, in relevant part, that a closed-end investment company may not issue or sell any senior security if, immediately thereafter, the company has outstanding more than one class of senior security. Applicants acknowledge that the creation of multiple classes of shares of the Funds may be prohibited by section 18(c), as a class may have priority over another class as to payment of dividends because shareholders of different classes would pay different fees and expenses.

3. Section 18(i) of the Act provides that each share of stock issued by a registered management investment company will be a voting stock and have equal voting rights with every other outstanding voting stock. Applicants acknowledge that multiple classes of shares of the Funds may violate section 18(i) of the Act because each class would be entitled to exclusive voting rights with respect to matters solely related to that class.

4. Section 6(c) of the Act provides that the Commission may exempt any person, security or transaction or any class or classes of persons, securities or transactions from any provision of the Act, or from any rule or regulation under the Act, if and to the extent such exemption is necessary or appropriate in the public interest and consistent with the protection of investors and the purposes fairly intended by the policy and provisions of the Act. Applicants request an exemption under section 6(c) from sections 18(a)(2), 18(c) and 18(i) to permit the Funds to issue multiple classes of shares.

5. Applicants submit that the proposed allocation of expenses relating to distribution and/or services and voting rights is equitable and will not discriminate against any group or class of shareholders. Applicants submit that the proposed arrangements would permit a Fund to facilitate the distribution of its securities and provide investors with a broader choice of shareholder services. Applicants assert that the proposed closed-end investment company multiple class structure does not raise concerns underlying section 18 of the Act to any greater degree than open-end investment companies' multiple class structures. Applicants state that each Fund will comply with the provisions of rule 18f–3 as if it were an open-end investment company.

Early Withdrawal Charges

1. Section 23(c) of the Act provides, in relevant part, that no registered closed-end investment company shall purchase securities of which it is the issuer, except: (a) On a securities exchange or other open market; (b) pursuant to tenders, after reasonable opportunity to submit tenders given to all holders of securities of the class to be purchased; or (c) under other circumstances as the Commission may permit by rules and regulations or orders for the protection of investors.

2. Rule 23c–3 under the Act permits a registered closed-end investment company (an ''interval fund'') to make repurchase offers of between five and twenty-five percent of its outstanding shares at net asset value at periodic intervals pursuant to a fundamental policy of the interval fund. Rule 23c–3(b)(1) under the Act permits an interval fund to deduct from repurchase proceeds only a repurchase fee, not to exceed two percent of the proceeds, that is paid to the interval fund and is reasonably intended to compensate the

Companies, Investment Company Act Release No. 26372 (Feb. 27, 2004) (adopting release) (requiring open-end investment companies to disclose fund expenses in shareholder reports); and Disclosure of Breakpoint Discounts by Mutual Funds, Investment Company Act Release No. 26464 (June 7, 2004) (adopting release) (requiring open-end investment companies to provide prospectus disclosure of certain sales load information).

[7] Fund of Funds Investments, Investment Company Act Rel. Nos. 26198 (Oct. 1, 2003) (proposing release) and 27399 (Jun. 20, 2006) (adopting release). *See also* Rules 12d1–1, *et seq.* of the Act.

fund for expenses directly related to the repurchase.

3. Section 23(c)(3) provides that the Commission may issue an order that would permit a closed-end investment company to repurchase its shares in circumstances in which the repurchase is made in a manner or on a basis that does not unfairly discriminate against any holders of the class or classes of securities to be purchased. Applicants state that the Initial Fund currently charges, and Future Funds may charge, a repurchase fee at a rate of no greater than 2 percent of the aggregate net asset value of a shareholder's shares repurchased by the Fund (an ''Early Repurchase Fee'') if the interval between the date of purchase of the shares and the valuation date with respect to the repurchase of those shares is less than one year. Applicants represent that any Early Repurchase Fee imposed by a Fund will apply equally to all New Class Shares and to all classes of shares of such Fund, consistent with section 18 of the Act and rule 18f–3 thereunder.

4. Applicants request relief under section 6(c), discussed above, and section 23(c)(3) from rule 23c–3 to the extent necessary for the Funds to impose EWCs on shares of the Funds submitted for repurchase that have been held for less than a specified period.

5. Applicants state that the EWCs they intend to impose are functionally similar to CDSLs imposed by open-end investment companies under rule 6c–10 under the Act. Rule 6c–10 permits open-end investment companies to impose CDSLs, subject to certain conditions. Applicants note that rule 6c–10 is grounded in policy considerations supporting the employment of CDSLs where there are adequate safeguards for the investor, and state that the same policy considerations support imposition of EWCs in the interval fund context. In addition, applicants state that EWCs may be necessary for the distributor to recover distribution costs. Applicants represent that any EWC imposed by the Funds will comply with rule 6c–10 under the Act as if the rule were applicable to closed-end funds. Applicants further represent that each Fund will disclose EWCs in accordance with the requirements of Form N–1A concerning CDSLs as if the Fund were an open-end investment company.

Asset-Based Distribution and/or Service Fees

1. Section 17(d) of the Act and rule 17d–1 under the Act prohibit an affiliated person of a registered investment company, or an affiliated person of such person, acting as principal, from participating in or effecting any transaction in connection with any joint enterprise or joint arrangement in which the investment company participates unless the Commission issues an order permitting the transaction. In reviewing applications submitted under section 17(d) and rule 17d–1, the Commission considers whether the participation of the investment company in a joint enterprise or joint arrangement is consistent with the provisions, policies and purposes of the Act, and the extent to which the participation is on a basis different from or less advantageous than that of other participants.

2. Rule 17d–3 under the Act provides an exemption from section 17(d) and rule 17d–1 to permit open-end investment companies to enter into distribution arrangements pursuant to rule 12b–1 under the Act. Applicants request an order under section 17(d) and rule 17d–1 under the Act to the extent necessary to permit the Funds to impose asset-based distribution and/or service fees. Applicants represent that the Funds will comply with rules 12b–1 and 17d–3 as if those rules applied to closed-end investment companies.

3. For the reasons stated above, applicants submit that the exemptions requested are necessary and appropriate in the public interest and are consistent with the protection of investors and the purposes fairly intended by the policy and provisions of the Act. Applicants further submit that the relief requested pursuant to section 23(c)(3) will be consistent with the protection of investors and will insure that applicants do not unfairly discriminate against any holders of the class of securities to be purchased. Finally, applicants state that the Funds' imposition of asset-based distribution and/or service fees is consistent with the provisions, policies and purposes of the Act and does not involve participation on a basis different from or less advantageous than that of other participants.

Applicants' Condition

Applicants agree that any order granting the requested relief will be subject to the following condition:

Each Fund relying on the order will comply with the provisions of rules 6c–10, 12b–1, 17d–3, 18f–3, 22d–1, and, where applicable, 11a–3 under the Act, as amended from time to time or replaced, as if those rules applied to closed-end management investment companies, and will comply with the FINRA Sales Charge Rule, as amended from time to time, as if that rule applied to all closed-end management investment companies.

For the Commission, by the Division of Investment Management, under delegated authority.

J. Matthew DeLesDernier,

Assistant Secretary.

[FR Doc. 2020–23550 Filed 10–23–20; 8:45 am]

BILLING CODE 8011–01–P

SECURITIES AND EXCHANGE COMMISSION

[Release No. 34–90227; File No. SR–FINRA–2020–035]

Self-Regulatory Organizations; Financial Industry Regulatory Authority, Inc.; Notice of Filing of a Proposed Rule Change To Amend the FINRA Codes of Arbitration Procedure To Increase Arbitrator Chairperson Honoraria and Certain Arbitration Fees

October 20, 2020.

Pursuant to Section 19(b)(1) of the Securities Exchange Act of 1934 (''Act'')[1] and Rule 19b–4 thereunder,[2] notice is hereby given that on October 16, 2020, the Financial Industry Regulatory Authority, Inc. (''FINRA'') filed with the Securities and Exchange Commission (''SEC'' or ''Commission'') the proposed rule change as described in Items I, II, and III below, which Items have been prepared by FINRA. The Commission is publishing this notice to solicit comments on the proposed rule change from interested persons.

I. Self-Regulatory Organization's Statement of the Terms of Substance of the Proposed Rule Change

FINRA is proposing to amend the Code of Arbitration Procedure for Customer Disputes (''Customer Code'') and the Code of Arbitration Procedure for Industry Disputes (''Industry Code'') (together, ''Codes'') to increase arbitrator chairperson (''Chair'') honoraria. Specifically, the proposed rule change would: (1) Increase the additional hearing-day honorarium Chairs receive for each hearing on the merits from $125 to $250 and (2) create a new $125 Chair honorarium for each prehearing conference in which the Chair participates. Under the proposed rule change, these increases would be funded primarily by minimal increases to the member surcharge and process fees for claims of more than $250,000 or claims for non-monetary or unspecified damages. The proposed rule change would also increase filing fees and hearing session fees for customers, associated persons and members bringing claims of more than $500,000

[1] 15 U.S.C. 78s(b)(1).

[2] 17 CFR 240.19b–4.

or claims for non-monetary or unspecified damage.

The text of the proposed rule change is available on FINRA's website at *http://www.finra.org,* at the principal office of FINRA and at the Commission's Public Reference Room.

II. Self-Regulatory Organization's Statement of the Purpose of, and Statutory Basis for, the Proposed Rule Change

In its filing with the Commission, FINRA included statements concerning the purpose of and basis for the proposed rule change and discussed any comments it received on the proposed rule change. The text of these statements may be examined at the places specified in Item IV below. FINRA has prepared summaries, set forth in sections A, B, and C below, of the most significant aspects of such statements.

A. Self-Regulatory Organization's Statement of the Purpose of, and Statutory Basis for, the Proposed Rule Change

1. Purpose

(I) Background and Discussion

FINRA makes arbitrator honoraria payments to its arbitrators for the services arbitrators provide to FINRA's dispute resolution forum. Currently, under FINRA Rule 12214(a), arbitrators receive $300 for each hearing session in which the arbitrator participates.[3] In recognition of their increased experience and the extra responsibilities they must perform during an arbitration,[4] Chairs currently receive an additional $125 for serving as Chair during a hearing (''hearing-day honorarium'').[5] The Chair receives the additional honorarium for each hearing day, regardless of the number of hearing sessions held per day. Currently, Chairs do not receive an additional honorarium for prehearing conferences, even though Chairs are required to lead the prehearing conferences and perform additional tasks in connection with the prehearings, such as setting discovery, briefing, and motion deadlines, scheduling subsequent hearing sessions, and drafting prehearing orders.[6]

In addition, several hearing locations lack a sufficient number of local Chairs. Chairs are often the most experienced arbitrators on FINRA's roster and must meet additional requirements to serve as Chair. To qualify as a Chair, an arbitrator must complete Chair training and have served on at least three arbitrations through award in which hearings were held, or be a lawyer who served on at least one arbitration through award in which hearings were held.[7] The low number of Chairs in some hearing locations can result in parties being presented a list with a majority of non-local Chairs. Parties have expressed concern about using non-local arbitrators to complete Chair lists. Parties typically prefer arbitrators from the same general geographic area to hear their cases because they live in the same community as the parties who bring their claims, and are familiar with local law and customs. Appointing arbitrators who live outside of the local hearing location may result in scheduling delays and requires FINRA to pay additional travel expenses.

Chair-eligible arbitrators have indicated that they are not interested in completing the required Chair training and serving on the Chair roster because of the extra work required compared to the modest, additional Chair honorarium currently offered. To provide more of an incentive for eligible arbitrators to become Chairs and to more adequately compensate Chairs for their additional work, FINRA is proposing to increase the current per-day Chair honorarium for hearings on the merits and establish a Chair honorarium for prehearing conferences.[8] These increases would be funded primarily by minimal increases to the member surcharge and process fees for claims of more than $250,000 or claims for non-monetary or unspecified damages.[9] The proposed rule change would also increase filing fees and hearing session fees for customers, associated persons and members bringing claims of more than $500,000 or claims for non-monetary or unspecified damages.[10]

In all, on average the fees for an arbitration case would increase by $252, or 2.65 percent. FINRA believes that the cost of arbitration should be borne by the users of the forum, without imposing a significant barrier to public customers who bring arbitration claims to the forum. Thus, the fees are designed to be borne 85 percent by member firms and 15 percent by claimants.[11]

(II) Proposed Rule Change

A. Proposed Arbitrator Chair Honoraria Increases

The proposed rule change would amend FINRA Rules 12214 and 13214 to increase the arbitrator Chair honoraria. Specifically, the proposed rule change would increase the hearing-day honorarium from $125 to $250 to better compensate the Chair for the additional training and responsibilities required of the position.[12] In addition, the proposed rule change would establish a new honorarium to pay a Chair an additional $125 for each prehearing conference in which he or she participates. Under the proposed rule change, Chairs would receive this additional compensation even if an arbitration case closes without a hearing. Thus, if the Chair participates in a prehearing conference,[13] but the parties settle the case (as often occurs),[14] the Chair would

[3] A ''hearing session'' is any meeting between the parties and arbitrator(s) of four hours or less, including a hearing or a prehearing conference. A typical day has two hearing sessions. *See* FINRA Rules 12100(p) and 13100(p).

[4] For example, during a typical arbitration, the Chair oversees the discovery process, conducts the initial prehearing conference (''IPHC'') and subsequent prehearing conferences as needed, drafts rulings and orders, and manages efficient hearings. For more information on Chair responsibilities and training, *see https://www.finra.org/sites/default/files/FINRA_Chairperson_Training.pdf.*

[5] The term ''hearing'' means the hearing on the merits of an arbitration under FINRA Rules 12600 and 13600. *See* FINRA Rules 12100(o) and 13100(o).

[6] *See* FINRA Rules 12500(c) and 13500(c).

[7] *See* FINRA Rules 12400(c) and 13400(c).

[8] Discovery issues can be particularly time-consuming; among other things, the new prehearing honorarium would recognize the additional work Chairs put in when ruling on discovery issues. *See also supra* note 4.

[9] The FINRA Dispute Resolution Task Force (''Task Force'') suggested raising arbitration fees to fund arbitrator honoraria increases. The Task Force recommended that the proposed fee increases should be consistent with the current arbitration fee structure, which assigns a majority of the costs of the forum to firms through the member surcharge and process fees. The Task Force issued its Final Report and Recommendations, available at *https://www.finra.org/arbitration-mediation/finra-dispute-resolution-task-force.*

[10] In 2014, FINRA increased arbitrator honoraria for the first time in 15 years to help retain a roster of high-quality arbitrators and attract qualified individuals. *See* Securities Exchange Act Release No. 73245 (September 29, 2014), 79 FR 59876 (October 3, 2014) (Order Approving File No. SR–FINRA–2014–026). From the end of 2014 through 2019, FINRA has increased the arbitrator roster by 1,478. At the end of 2014, there were 6,361 arbitrators on the roster, and by the end of 2019, there were 7,839, an increase of 23 percent.

FINRA also recently increased the honorarium to Chairs who rule on motions or subpoenas without a hearing. *See* Securities Exchange Act Release No. 84418 (October 12, 2018), 83 FR 52857 (October 18, 2018) (Order Approving File No. SR–FINRA–2018–026).

[11] The proposed rule change would apply to all members, including members that are funding portals or have elected to be treated as capital acquisition brokers (''CABs''), given that the funding portal and CAB rule sets incorporate the impacted FINRA rules by reference.

[12] From 2014 through 2019, FINRA paid the hearing-day honorarium on an average of 2,569 times per year. In order to fund the proposed hearing-day honorarium increase from $125 to $250, FINRA would need to raise revenue by approximately $368,000 annually. This estimate is an average of the projected revenue required in 2019–2021 to fund the increase to the Chair hearing-day honorarium.

[13] *See* FINRA Rules 12500(a) and 13500(a).

[14] *See* FINRA Rules 12701(a) and 13701(a).

still receive some compensation for serving as Chair.[15]

FINRA recognizes that the proposed increase in the Chair honorarium for hearings and the new prehearing honorarium may not meet market rates.[16] FINRA believes, however, these adjustments would better compensate Chairs for their important role in the proceedings requiring a minimal increase to the fees that customers, associated persons and members would be assessed.[17]

B. Proposed Increases to Arbitration Fees

To fund increases in the arbitrator Chair honoraria, FINRA is proposing to increase the member surcharge, member process fees, filing fees, and hearing session fees that the forum assesses the parties during the course of an arbitration case. FINRA believes the proposed fee increases would generate sufficient revenue to offset the proposed increases in the arbitrator Chair honoraria without placing an undue burden on users of the forum, particularly customers and claimants with small claims.

(i) Proposed Member Surcharge Increases

The Codes provide that a surcharge will be assessed against each member that: (1) Files a claim, counterclaim, cross claim, or third party claim under the Codes; (2) is named as a respondent in a claim, counterclaim, cross claim, or third party claim filed and served under the Codes; or (3) employed, at the time the dispute arose, an associated person who is named as a respondent in a claim, counterclaim, cross claim, or third party claim filed and served under the Codes.[18] The member is assessed one surcharge per arbitration case.[19] Member surcharges are intended to allocate the costs of administering the arbitration case to the firms that are involved in those cases. Thus, each member is assessed a member surcharge, based on the aggregate claim amount, when it is brought into the case, whether through a claim, counterclaim, cross claim or third party claim. The member surcharge is the responsibility of the member party and cannot be allocated to any other party (''non-allocable'').[20]

FINRA is proposing to amend FINRA Rules 12901 and 13901 to increase the member surcharge for claims of more than $250,000 and claims for non-monetary or unspecified damages.

Table 1 illustrates the proposed dollar and percentage changes for each tier.

TABLE 1—MEMBER SURCHARGE SCHEDULE

Amount of claim (exclusive of interest and expenses)	Current surcharge	Proposed Fee	Change	Percentage change
$.01 to $5,000	$150	$150	$0	0
$5,000.01–$10,000	325	325	0	0
$10,000.01–$25,000	450	450	0	0
$25,000.01–$50,000	750	750	0	0
$50,000.01–$100,000	1,100	1,100	0	0
$100,000.01–$250,000	1,700	1,700	0	0
$250,000.01–$500,000	1,900	2,025	125	7
$500,000.01–$1,000,000	2,475	2,625	150	6
$1,000,000.01–$5,000,000	3,025	3,200	175	6
$5,000,000.01–$10,000,000	3,600	3,850	250	7
Over $10,000,000	4,025	4,325	300	7
Non-Monetary/Not Specified	1,900	2,000	100	5

The member surcharge would remain non-allocable under the proposed rule change and, therefore, would not result in any additional costs to other parties to the arbitration, including customer claimants.

(ii) Proposed Filing Fee Increases

Under the Codes, if a customer, associated person, member, or other non-member files a claim, counterclaim, cross claim or third party claim, they must pay a filing fee to initiate an arbitration.[21] The filing fee is based on the claim amount or type of damages requested.[22]

FINRA is proposing to amend FINRA Rules 12900 and 13900 to increase the filing fees for customers, associated persons, other non-members, or members bringing claims of more than $500,000 and claims for non-monetary or unspecified damages.

(1) Proposed Filing Fees Paid by Customers, Associated Persons or Other Non-Members

To minimize the impact of the proposed rule change on customers or claimants with small claims, the proposed rule change would amend FINRA Rule 12900(a) to increase the filing fees for claims of more than $500,000 and claims for non-monetary or unspecified damages.[23] Table 2 shows the proposed dollar and percentage changes.

[15] From 2014 through 2019, FINRA conducted an average of 4,954 prehearing conferences per year. In order to pay the proposed additional Chair prehearing honorarium of $125, FINRA would need to raise revenue by approximately $724,000 annually. This estimate is an average of the projected revenue required in 2019–2021 to fund the new Chair honorarium for prehearing conferences.

[16] In other private arbitration forums like the American Arbitration Association (''AAA'') and JAMS, arbitrators set their own rates, which can be significantly higher than the honoraria FINRA provides. For example, a FINRA Chair would receive $600 for a full hearing day (two hearing sessions at $300 each) plus an additional $125 for serving as Chair; whereas, a AAA or JAMS arbitrator could receive $4,000 ($500/hour) for the same amount of time.

[17] Together, the changes to the Chair honoraria would add approximately $1.1 million to FINRA's annual expenses. *See supra* notes 1212 and 15.

[18] *See* FINRA Rules 12901 and 13901.

[19] *See* FINRA Rules 12901(a)(6) and 13901(f).

[20] *See supra* note 19.

[21] *See* FINRA Rules 12900(a)(1) and 13900(a)(1).

[22] *See supra* note 21.

[23] FINRA Rule 13900(a) applies filing fees for claims filed by associated persons. The claim amount tiers and filing fee amounts are the same as those in Rule 12900(a)(1). The proposed rule change would similarly amend Rule 13900(a) to increase the filing fees for claims of more than $500,000 and claims for non-monetary or unspecified damages.

TABLE 2—FILING FEES FOR CUSTOMERS, ASSOCIATED PERSONS OR OTHER NON-MEMBER CLAIMANTS

Amount of claim (exclusive of interest and expenses)	Current claim filing fee	Proposed claim filing fee	Change	Percentage change
$.01 to $1,000	$50	$50	$0	0
$1,000.01–$2,500	75	75	0	0
$2,500.01–$5,000	175	175	0	0
$5,000.01–$10,000	325	325	0	0
$10,000.01–$25,000	425	425	0	0
$25,000.01–$50,000	600	600	0	0
$50,000.01–$100,000	975	975	0	0
$100,000.01–$500,000	1,425	1,425	0	0
$500,000.01–$1,000,000	1,725	1,740	15	1
$1,000,000.01–$5,000,000	2,000	2,025	25	1
Over $5,000,000	2,250	2,300	50	2
Non-Monetary/Not Specified	1,575	1,600	25	2

(2) Proposed Filing Fees Paid by Members

The proposed rule change would also amend FINRA Rules 12900(b) and 13900(b) to increase the filing fees that members pay for claims of more than $500,000 and claims for non-monetary or unspecified damages. The filing fee for claims of more than $500,000 would increase by $100 to $200, and for non-monetary claims, by $100.[24] Table 3 shows the proposed dollar and percentage changes.

TABLE 3—FILING FEES FOR MEMBER CLAIMANT

Amount of claim (exclusive of interest and expenses)	Current claim filing fee	Proposed claim filing fee	Change	Percentage change
$.01 to $1,000	$225	$225	$0	0
$1,000.01–$2,500	350	350	0	0
$2,500.01–$5,000	525	525	0	0
$5,000.01–$10,000	750	750	0	0
$10,000.01–$25,000	1,050	1,050	0	0
$25,000.01–$50,000	1,450	1,450	0	0
$50,000.01–$100,000	1,750	1,750	0	0
$100,000.01–$500,000	2,125	2,125	0	0
$500,000.01–$1,000,000	2,550	2,650	100	4
$1,000,000.01–$5,000,000	3,400	3,550	150	4
Over $5,000,000	4,000	4,200	200	5
Non-Monetary/Not Specified	1,700	1,800	100	6

(iii) Proposed Process Fee Increases

The Codes provide that each member that is a party to an arbitration or employed an associated person who is a party to an arbitration in which the claim amount is more than $25,000 must pay a process fee based on the amount of the claim.[25] FINRA assesses the member the applicable process fee when the parties are sent the arbitrator lists or notification of the hearing. Like the member surcharge, the process fee is non-allocable to other parties to the arbitration.[26]

The proposed rule change would amend FINRA Rules 12903 and 13903 to increase the member process fees for claim amounts larger than $250,000 and for claims for non-monetary or unspecified damages. Table 4 illustrates the proposed dollar and percentage changes.

TABLE 4—MEMBER PROCESS FEE SCHEDULE

Amount of claim (exclusive of interest and expenses)	Current process fee	Proposed fee	Change	Percentage change
$.01–$25,000	$0	$0	$0	0
$25,000.01–$50,000	1,750	0	0	0
$50,000.01–$100,000	2,250	0	0	0
$100,000.01–$250,000	3,250	0	0	0
$250,000.01–$500,000	3,750	3,875	125	3
$500,000.01–$1,000,000	5,075	5,225	150	3
$1,000,000.01–$5,000,000	6,175	6,375	200	3
$5,000,000.01–$10,000,000	6,800	7,050	250	4
Over $10,000,000	7,000	7,300	300	4
Non-Monetary/Not Specified	3,750	3,850	100	3

[24] The partial refund amounts for settlements or withdrawals more than 10 days before the hearing on the merits would remain the same. *See* FINRA Rules 12900(c)(1) and 13900(c)(1).

[25] *See* FINRA Rules 12903 and 13903. If a claim amount is less than $25,000, the member would not be assessed any process fees.

[26] *See* FINRA Rules 12903(d) and 13903(d). *See also* FINRA Rules 12701(b) and 13701(b).

The member process fees would remain non-allocable under the proposed rule change and, therefore, would not result in any additional costs to other parties to the arbitration, including customer claimants.

(iv) Proposed Hearing Session Fee Increases

FINRA assesses hearing session fees against the parties for each hearing and pre-hearing session conducted by a panel.[27] In the award, the panel determines the amount of the hearing session fees that each party is required to pay.[28] The arbitrators may apportion the fees in any manner, including assessing the entire amount against one party.[29]

As the panel can allocate hearing session fees to customer claimants, the proposed rule change would amend FINRA Rules 12902 and 13902 to increase the fees for claims of more than $500,000 and for claims for non-monetary or unspecified damages, and would be small, ranging from $25 to $75. There are different hearing session fees for hearings with one arbitrator versus hearings with three arbitrators. Under the proposed rule change, the fees would not change for hearings with one arbitrator, so that the forum remains accessible and affordable to customer claimants with small claims. Table 5 illustrates the proposed dollar and percentage changes.

TABLE 5—HEARING SESSION FEES FOR SESSION WITH THREE ARBITRATORS

Amount of claim (exclusive of interest and expenses)	Current fee for session w/three arbitrators	Proposed fee for session w/three arbitrators	Change	Percentage change
Up to $2,500	NA	NA	NA	NA
$2,500.01–$5,000	NA	NA	NA	NA
$5,000.01–$10,000	NA	NA	NA	NA
$10,000.01–$25,000	NA	NA	NA	NA
$25,000.01–$50,000	$600	$600	$0	0
$50,000.01–$100,000	750	750	0	0
$100,000.01–$500,000	1,125	1,125	0	0
$500,000.01–$1,000,000	1,300	1,325	25	2
$1,000,000.01–$5,000,000	1,400	1,435	35	3
Over $5,000,000	1,500	1,575	75	5
Non-Monetary/Not Specified	1,125	1,150	25	2

The effects of the proposed hearing session fee increases may be minimized under the Codes. For example, if the parties settle the arbitration before any hearings are held, the parties will not be assessed hearing fees.[30] During settlement negotiations, parties have the opportunity to determine how to share any hearing session fees, if hearings are held.[31] For cases that result in an award, the panel has discretion to assess hearing session fees as part of the award,[32] which allows them to consider numerous factors to determine each party's appropriate share and assign the costs accordingly. The proposed rule change would not change a party's ability to settle or arbitrators' discretion to assess the hearing session fees.

C. Examples of How the Proposed Honoraria and Fee Increases Would Be Applied

The following two examples help illustrate how the proposed fee increases would affect a typical arbitration. FINRA notes that the fees associated with an arbitration claim depend on multiple factors including: The claim amount, the number of arbitrators, the number of hearing sessions conducted, how the arbitrators decide to assess the fees among the parties, and whether the case is settled or withdrawn.

(i) Claims Alleging Damages of $100,000.01 to $500,000

For a claim between $100,000.01 and $500,000, the customer would pay a filing fee of $1,425 to initiate the claim.[33] For this claim amount tier, there would be no increase to the filing fee. The member surcharge assessed against the firm would increase by $125, from $1,900 to $2,025. The member process fees would also increase by $125, from $3,750 to $3,875. In total, the fees members would pay for cases in this claim amount tier would be $5,900, an increase of approximately four percent. The hearing session fees for this claim amount would remain unchanged at $1,125 per hearing session.

(ii) Claims Alleging Damages Over $1,000,000.01 to $5,000,000

For a claim between $1,000,000.01 and $5,000,000, the customer would pay $2,025, an increase of $25 from $2,000, to initiate the claim.[34] The member surcharge to the firm would increase by $175, from $3,025 to $3,200. The member process fees would increase by $200, from $6,175 to $6,375. Together, the fees members would pay for cases in this claim amount tier would be $9,575, an increase of approximately four percent. The proposed hearing session fees for this claim amount tier would increase by $35, from $1,400 to $1,435.

D. Technical Changes

The proposed rule change would amend FINRA Rules 12901 and 13901 to make the formatting more consistent in the fee schedules. In addition, the proposed rule change would amend FINRA Rule 12900(c)(3) to change the cross-reference in the rule from Rule 12202(c) to Rule 12202.

If the Commission approves the proposed rule change, FINRA will announce the effective date of the

[27] *See* FINRA Rules 12902(a) and 13902(a). *See also supra* note 3.

[28] The term ''panel'' means the arbitration panel, whether it consists of one or more arbitrators. *See* FINRA Rules 12100(u) and 13100(s).

[29] *See* FINRA Rules 12902(a)(1) and 13902(a)(1).

[30] The panel will assess a hearing session fee against the parties for an IPHC, if one is held, in the award. *See* FINRA Rules 12902(b)(1) and 13902(b)(1). *See also* FINRA Rules 12500(c) and 13500(c).

[31] *See* FINRA Rules 12701(b) and 13701(b).

[32] *See* FINRA Rules 12902(a)(1) and 13902(a)(1).

[33] Between 2014–2019, FINRA closed on average 830 cases out of 2,428 customer cases with damages in this range.

[34] Between 2014–2019, FINRA closed on average 283 cases out of 2,428 customer cases with damages in this range.

proposed rule change in a *Regulatory Notice* to be published no later than 60 days following Commission approval. The effective date will be no later than 120 days following publication of the *Regulatory Notice* announcing Commission approval.

2. Statutory Basis

FINRA believes that the proposed rule change is consistent with the provisions of Section 15A(b)(6) of the Act,[35] which requires, among other things, that FINRA rules must be designed to prevent fraudulent and manipulative acts and practices, to promote just and equitable principles of trade, and, in general, to protect investors and the public interest, and Section 15A(b)(5) of the Act,[36] which requires, among other things, that FINRA rules provide for the equitable allocation of reasonable dues, fees and other charges among members and issuers and other persons using any facility or system that FINRA operates or controls.

FINRA believes the proposed increase to the hearing-day Chair honorarium and the addition of a Chair honorarium for prehearing conferences will provide more of an incentive for eligible arbitrators to become Chairs and more adequately compensate Chairs for their additional work. These changes, in turn, will help FINRA attract both new and experienced arbitrators to become Chairs, increasing the number of arbitrators on the Chair roster as well as the quality and depth of the roster, which is necessary for protecting investors and the public interest.

In addition, the proposed fee increases to the member surcharge, member process fees, filing fees, and hearing session fees will enable FINRA to cover the proposed changes to arbitrator Chair honoraria while helping to ensure that FINRA's arbitration forum remains accessible and affordable to parties, particularly customers and claimants with small claims.

FINRA believes the proposed rule change appropriately allocates the proposed fee increases among users of the forum by spreading the increases among high claim amounts and continuing to ensure that the costs of the forum are borne 85 percent by members and 15 percent by customers. In particular, the proposed Chair honoraria changes will be funded primarily by the minimal increases to the surcharge and process fees assessed to member firms for claims of more than $250,000. In addition, the filing and hearing session fee increases, which impact customer claimants, will apply only to claims of more than $500,000, and will be small. For example, the filing fee increases will range from $15 to $50. The hearing session fee increases will range from $25 to $75. Thus, FINRA believes the proposed rule change provides for the equitable allocation of reasonable fees for users of the arbitration forum, and protects investors and the public interest by keeping the forum accessible and affordable for customers.

B. Self-Regulatory Organization's Statement on Burden on Competition Economic Impact Assessment

FINRA has undertaken an economic impact assessment, as set forth below, to analyze the regulatory need for the proposed change, its potential economic impacts, including anticipated costs, benefits, and competitive effects, relative to the current baseline, and the alternatives FINRA considered in assessing how best to meet FINRA's regulatory objectives.

Regulatory Need

The proposed amendments are intended to address the issue of a lack of local public Chairs on the roster. As stated earlier, several FINRA hearing locations lack a sufficient number of local public Chairs. Hearing sites without a sufficient number of local Chairs draw from non-local arbitrators. Arbitration parties have reported that they prefer local arbitrators to preside over their cases. Appointing Chairs who live outside of the local hearing location may also result in scheduling delays of hearings and prehearing conferences. Further, non-local arbitrators who serve on a case incur additional expenses related to air, rail, and local ground transportation and hotels, which are then reimbursed by FINRA.

Economic Baseline

The economic baseline for the proposed amendments is the current rules under the Codes that address the Chair honoraria and forum fees that parties to an arbitration incur. The economic baseline also includes the roster of local public Chairs in each hearing location.

Currently, Chairs receive an additional $125 per day for each hearing on the merits (no additional compensation if cases are closed by settlement or other means prior to the first hearing on the merits). Chairs do not receive an additional honorarium when attending prehearing conferences. Anecdotal evidence suggests that the current Chair honorarium is not commensurate with the additional work required of Chairs in the arbitration process.[37]

FINRA collects information detailing the number of open cases and public Chairs per hearing location. As of April 30, 2020, across the 69 domestic hearing locations, there were 4,788 open cases.[38] Additionally, the arbitrator roster included 1,118 local public Chairs, and 1,531 non-local public Chairs who served in these locations.[39] The average number of local public Chairs and open cases was 16 and 69, respectively; thus, non-local Chairs were used in some cases.[40]

Hearing locations with fewer than 20 local public Chairs pose a particular concern for the forum. FINRA's arbitrator appointment process uses the Neutral List Selection System (''NLSS''), a computer algorithm, to randomly generate lists of arbitrators from FINRA's arbitrator roster. NLSS generates a random list of 10 arbitrators from the public Chair roster. Each party in the case receives the list, and each separately-represented party may strike up to four names.[41] The system generates the random list from the local Chair roster first. If the hearing location does not have at least 20 local Chairs, the system will pull in non-local Chairs. The use of non-local Chairs to complete the list increases the probability that the final list of 10 Chairs will include one or more non-local Chairs.

In the sample, 51 out of 69 hearing locations had fewer than 20 local public Chairs. Among the 43 most active hearing locations (those with 20 or more open cases), 25 locations had fewer than 20 local public Chairs. The majority of these locations are midsize cities, for example, Birmingham (Alabama) with seven local public Chairs and 31 open cases, and Columbia (South Carolina) with three local public Chairs and 72 open cases.[42] On average, these 25 hearing locations had 10 local public

[35] 15 U.S.C. 78o–3(b)(6).

[36] 15 U.S.C. 78*o*–3(b)(5).

[37] The anecdotal evidence is mainly based on feedback that FINRA has received from Chair-eligible arbitrators who revealed a lack of interest in completing the required Chair training.

[38] Among the 4,788 open cases, 1,373 of them are in San Juan, Puerto Rico due to the downgrade of Puerto Rican bonds to ''junk status.''

[39] Arbitrators, including Chairs, can serve in multiple hearing locations.

[40] The median number of local public Chairs and open cases was 9 and 26, respectively.

[41] For example, each separately represented party may strike an arbitrator as a potential Chair because of a conflict of interest. In some cases, a conflict would preclude an arbitrator from even appearing on a list. For example, if an arbitrator has a current brokerage account with a party involved in the case, that arbitrator would not appear on the list involving the same party.

[42] These 25 hearing locations also include San Juan, Puerto Rico, which had 1,373 open cases and three local public Chairs. *See supra* note 38.

Chairs and 32 open cases.[43] This indicates that if FINRA is able to fill the gap by recruiting, on average, 10 additional local Chairs in these cities, it can greatly decrease the probability that the final list of 10 public Chairs presented to arbitration parties will include one or more non-local Chairs.

FINRA also collects information on the use of non-local public Chairs based on closed arbitration cases. During 2019, 3,556 arbitration cases were closed in which public Chairs were appointed to the arbitration panels. Of these 3,556 cases, 2,162 (60 percent) of them were customer cases. Forty percent of these arbitration cases and 48 percent of the customer cases had non-local public Chairs appointed on the arbitration panels.

In the 25 active hearing locations with fewer than 20 local public Chairs, 1,296 arbitration cases were closed during 2019 in which public Chairs were appointed to the arbitration panels. Of these 1,296 cases, 980 (76 percent) of them were customer cases. Seventy-nine percent of these arbitration cases and 83 percent of the customer cases had non-local public Chairs appointed on the arbitration panels.

Economic Impact

The proposed amendments are expected to affect the parties to an arbitration such as customers, member firms, and associated persons. The proposed rule change is also expected to affect FINRA arbitrators and its dispute resolution forum. The proposed amendments would increase the honoraria that a Chair receives, increasing the incentives of arbitrators to become Chairs or serve as Chairs. The proposed rule change would likely increase the pool of arbitrators available to serve as Chairs, thereby increasing the probability that more local public Chairs would be proposed for selection. FINRA believes that the proposed rule change could help retain experienced arbitrators who currently serve as Chairs and increase the total number of arbitrators on the Chair roster.

In order to estimate potential increases in Chair honoraria following the proposed rule change, FINRA analyzes 3,993 arbitration cases in total that were closed during 2019.[44] FINRA estimates that under the proposed rule change, there would have been an aggregate increase of $345,500 to $691,000 in hearing-day honoraria, and an addition of $649,375 in Chair honoraria for prehearing conferences. Together, the aggregate Chair honoraria for these cases would have increased by $994,875 to $1,340,375.

The primary benefits of the proposed rule change would be the reduction in travel costs for non-local Chairs as well as the increased satisfaction of the parties in the case from having a local Chair due to the local Chair's knowledge of local laws and customs. In addition, arbitration parties may benefit from fewer scheduling delays of hearings and prehearing conferences following the proposed amendments.

The increase in the number of arbitrators willing to serve in the role of a Chair depends on the sensitivity of arbitrator incentives to honoraria changes. The impact on the Chair roster may be higher for the hearing sites of small and midsize cities than for the hearing sites of large cities for two reasons. First, the increase in the incentive of arbitrators may be more pronounced in small and midsize cities because the cost of living is relatively lower in these locations. Second, adding even a few arbitrators to the Chair roster for small and midsize cities would likely have a greater impact than for larger cities because Chair rosters in these cities tend to be smaller.

The proposed amendments may not fill the gap of local public Chair rosters in the immediate term or in all locations, as some hearing locations may lack a sufficient number of Chair-eligible public arbitrators. In order to be eligible for the Chair roster, FINRA requires an arbitrator to have a minimum amount of arbitration experience.[45] Thus, the immediate increase in the local public Chair roster following the proposed rule change would be capped at the number of experienced local public arbitrators.[46] Twenty-four hearing locations, for instance, had fewer than 20 local public arbitrators through April 30, 2020 in the sample. This suggests that the proposed rule change may be less likely to fill the gap of public Chair rosters at these locations even if all these public arbitrators, regardless of their experience, could become Chairs. The local Chair roster could increase over time, however, as the local public arbitrators gain more experience.[47] Taken together, FINRA acknowledges that there is limited direct evidence to establish that the proposed rule change will have an immediate effect on mitigating the issue of a lack of local public Chairs in the most acute locations.

The direct costs of the proposed rule change would arise from the increase in forum fees that parties to an arbitration would incur. Among the 3,993 cases closed in 2019, 1,773 cases (44 percent of all cases) with claims of equal to or less than $250,000 would not be subject to any increases in forum fees following the proposed rule change. The remaining 2,220 cases (56 percent of all cases) would be subject to increases in forum fees: 1,662 cases (42 percent of all cases) with non-monetary/non-specified claims or claims of greater than $500,000 would be subject to higher filing fees, member surcharges and process fees, and hearing session fees; 558 cases (14 percent of all cases) with claims of larger than $250,000 but smaller than or equal to $500,000 would be subject to higher member surcharges and process fees.

Subject to the proposed rule change, the total forum fees associated with the 3,993 cases closed in 2019 would have increased by $1,006,365 (a 2.65 percent increase relative to the existing fee level).[48] While 44 percent of the 3,993 cases closed in 2019 would not have been subject to any fee increases under the proposed rule change, the remaining 2,220 cases would have been subject to an average increase of $453 in forum fees. When considering all cases that were closed in 2019, total forum fees would have increased around $252 on average. Note that this analysis is based on the assumption that changes in forum fees would not affect the decisions of arbitration parties on whether to file a case, how much to claim in damages, and whether to settle a case after the case is filed. FINRA

[43] The median number of local public Chairs and open cases across these 25 hearing locations was 10 and 89, respectively.

[44] There were 2,125 customer cases among the 3,993 arbitration cases (or 55 percent).

[45] FINRA requires that an arbitrator: (1) Have a law degree and be a member of a bar of at least one jurisdiction and have served as an arbitrator through award on at least one arbitration administered by a self-regulatory organization (''SRO'') in which hearings were held; or (2) have served as an arbitrator through award on at least three arbitrations administered by a SRO in which hearings were held.

[46] According to FINRA's estimate, there are 48 Chair-eligible public arbitrators who could potentially become Chairs in the 25 active hearing locations that had fewer than 20 public Chairs in the sample. Thus, on average, approximately two additional Chair-eligible public arbitrators could potentially become Chairs immediately following the proposed increases in Chair honoraria. Similarly, the median number of Chair-eligible public arbitrators who can potentially become Chairs is two across these 25 hearing locations.

[47] Such an increase in the Chair roster could be significant in the next few years as the number of public arbitrators has grown significantly in the past two years.

[48] Specifically, the percentage increase in forum fees is broken down as follows: 1.28 percent in filing fees (from $6,129,675 to $6,208,395), 4.72 percent in member surcharges (from $7,652,050 to $8,012,875), 2.49 percent in member process fees (from $14,677,250 to $15,042,000), and 2.13 percent in hearing session fees (from $9,495,500 to $9,697,570).

acknowledges the possibility that the proposed rule change may affect strategic decisions for certain arbitration parties at the margin or under certain circumstances. However, FINRA believes that the proposed rule change would not significantly impact such decisions for a majority of the arbitration parties due to the proposed increases in forum fees.

Currently, the arbitration fee structure distributes much of the costs of the forum to member firms that are party to an arbitration proceeding and to parties associated with large claims or non-monetary/unspecified claims. The proposed rule change would retain this approach. FINRA believes its current and proposed fee structures are designed to keep its arbitration program accessible and affordable to parties, especially customers and claimants with small claims.

Under the proposed rule change, all members involved in an arbitration would be subject to the same new fee schedule. FINRA recognizes that increases in forum fees due to the proposed rule change could have a bigger impact on small firms where claims are larger or non-monetary/unspecified as they may be more resource-constrained compared with large members.

FINRA recognizes that under the proposed rule change, there is likely to be a transfer of wealth from those that pay the higher fees to those that benefit from the proposed rule change if those parties are different. The proposed fee schedule would allocate the majority of the costs in customer cases to those with larger claim amounts or those with non-monetary/unspecified claims, although customers in cases with small claims could still benefit from an expanded public Chair roster. Further, most of the benefits would likely accrue to customers in cases situated in those locations that are currently lacking a sufficient number of local public Chairs by gaining new local public Chairs as a result of the proposed rule change. However, customers in cases situated in locations not lacking a sufficient number of local public Chairs would also likely incur fee increases.

Similar to customer cases, a majority of the benefits would likely accrue to parties to industry disputes that require a public Chair and are situated in locations lacking such Chairs. Thus, parties to industry disputes that require a non-public Chair would likely not benefit from additional local public Chairs due to the proposed changes, even though non-public Chairs would be compensated at the same, higher rate and these parties would incur the same fee increases as parties to customer cases or parties to industry disputes that require a public Chair.[49] FINRA notes, however, that a majority of industry disputes filed in the forum require a public Chair, for example, those involving a broker as a party. Industry parties to these disputes, therefore, could benefit from greater choice of local public Chairs if their hearing locations lack such Chairs.

FINRA does not believe that the proposed rule change would result in any burden on competition that is not necessary or appropriate in furtherance of the purposes of the Act. Specifically, FINRA does not expect that the proposed rule change would impact FINRA's competitive position relative to other arbitration forums.[50]

Alternatives Considered

An alternative to the proposed amendments is a higher or lower amount of increase in Chair honoraria. A higher amount would further incentivize arbitrators to serve as Chair, and FINRA would incur fewer expenses reimbursing non-local arbitrators for their travel. A higher amount, however, would also increase the fees on the parties to the arbitration, potentially making the forum less accessible.

Parties would incur fewer expenses for a lower amount of increase in Chair honoraria. A lower amount, however, may not be able to provide sufficient incentives for arbitrators to become a Chair, and FINRA would incur a higher level of expense to reimburse non-local arbitrators. FINRA believes the proposed level of increase in honoraria balances the expected increase in the number of local Chairs with the higher fees that would be paid by the parties to an arbitration.

C. Self-Regulatory Organization's Statement on Comments on the Proposed Rule Change Received From Members, Participants, or Others

Written comments were neither solicited nor received.

[49] FINRA believes that current hearing locations already have a sufficient number of non-public Chairs. As of July 8, 2020, the number of non-public Chairs on FINRA's roster was 741, whereas only nine open industry disputes in total required a non-public Chair. These nine open cases were situated in four different hearing locations. For example, New York City had four open industry disputes that required a non-public Chair and 119 local non-public Chairs; Los Angeles had three open industry disputes that required a non-public Chair and 53 local non-public Chairs.

[50] As FINRA arbitrator compensation tends to be significantly lower than the rate in other forums, the proposed increases in Chair honoraria are not expected to significantly affect other forums in attracting and retaining qualified Chairs. *See supra* note 16.

III. Date of Effectiveness of the Proposed Rule Change and Timing for Commission Action

Within 45 days of the date of publication of this notice in the **Federal Register** or within such longer period (i) as the Commission may designate up to 90 days of such date if it finds such longer period to be appropriate and publishes its reasons for so finding or (ii) as to which the self-regulatory organization consents, the Commission will:

(A) by order approve or disapprove such proposed rule change, or

(B) institute proceedings to determine whether the proposed rule change should be disapproved.

IV. Solicitation of Comments

Interested persons are invited to submit written data, views and arguments concerning the foregoing, including whether the proposed rule change is consistent with the Act. Comments may be submitted by any of the following methods:

Electronic Comments

- Use the Commission's internet comment form (*http://www.sec.gov/rules/sro.shtml*); or
- Send an email to *rule-comments@sec.gov*. Please include File Number SR–FINRA–2020–035 on the subject line.

Paper Comments

- Send paper comments in triplicate to Secretary, Securities and Exchange Commission, 100 F Street NE, Washington, DC 20549–1090.

All submissions should refer to File Number SR–FINRA–2020–035. This file number should be included on the subject line if email is used. To help the Commission process and review your comments more efficiently, please use only one method. The Commission will post all comments on the Commission's internet website (*http://www.sec.gov/rules/sro.shtml*). Copies of the submission, all subsequent amendments, all written statements with respect to the proposed rule change that are filed with the Commission, and all written communications relating to the proposed rule change between the Commission and any person, other than those that may be withheld from the public in accordance with the provisions of 5 U.S.C. 552, will be available for website viewing and printing in the Commission's Public Reference Room, 100 F Street NE, Washington, DC 20549, on official business days between the hours of 10 a.m. and 3 p.m. Copies of such filing

also will be available for inspection and copying at the principal office of FINRA. All comments received will be posted without change. Persons submitting comments are cautioned that we do not redact or edit personal identifying information from comment submissions. You should submit only information that you wish to make available publicly.

All submissions should refer to File Number SR–FINRA–2020–035 and should be submitted on or before November 16, 2020.

For the Commission, by the Division of Trading and Markets, pursuant to delegated authority.[51]

J. Matthew DeLesDernier,

Assistant Secretary.

[FR Doc. 2020–23633 Filed 10–23–20; 8:45 am]

BILLING CODE 8011–01–P

SECURITIES AND EXCHANGE COMMISSION

[Release No. 34–90230; File No. SR–CboeBYX–2020–030]

Self-Regulatory Organizations; Cboe BYX Exchange, Inc.; Notice of Filing and Immediate Effectiveness of a Proposed Rule Change To Extend the Current Pilot Program Related to BYX Rule 11.17, Clearly Erroneous Executions, to the Close of Business on April 20, 2021

October 20, 2020.

Pursuant to Section 19(b)(1) of the Securities Exchange Act of 1934 (''Act''),[1] and Rule 19b–4 thereunder,[2] notice is hereby given that on October 16, 2020, Cboe BYX Exchange, Inc. (''Exchange'' or ''BYX'') filed with the Securities and Exchange Commission (''Commission'') the proposed rule change as described in Items I and II below, which Items have been prepared by the Exchange. The Commission is publishing this notice to solicit comments on the proposed rule change from interested persons.

I. Self-Regulatory Organization's Statement of the Terms of Substance of the Proposed Rule Change

Cboe BYX Exchange, Inc. (''BYX'' or the ''Exchange'') is filing with the Securities and Exchange Commission (the ''Commission'') a proposed rule change to extend the current pilot program related to BYX Rule 11.17, Clearly Erroneous Executions, to the close of business on April 20, 2021. The text of the proposed rule change is provided in Exhibit 5.

The text of the proposed rule change is also available on the Exchange's website (*http://markets.cboe.com/us/equities/regulation/rule_filings/byx/*), at the Exchange's Office of the Secretary, and at the Commission's Public Reference Room.

II. Self-Regulatory Organization's Statement of the Purpose of, and Statutory Basis for, the Proposed Rule Change

In its filing with the Commission, the Exchange included statements concerning the purpose of and basis for the proposed rule change and discussed any comments it received on the proposed rule change. The text of these statements may be examined at the places specified in Item IV below. The Exchange has prepared summaries, set forth in sections A, B, and C below, of the most significant aspects of such statements.

A. Self-Regulatory Organization's Statement of the Purpose of, and Statutory Basis for, the Proposed Rule Change

1. Purpose

The purpose of this filing is to extend the effectiveness of the Exchange's current rule applicable to Clearly Erroneous Executions to the close of business on April 20, 2021. Portions of Rule 11.17, explained in further detail below, are currently operating as a pilot program set to expire on October 20, 2020.[3]

On September 10, 2010, the Commission approved, on a pilot basis, changes to BYX Rule 11.17 that, among other things: (i) Provided for uniform treatment of clearly erroneous execution reviews in multi-stock events involving twenty or more securities; and (ii) reduced the ability of the Exchange to deviate from the objective standards set forth in the rule.[4] In 2013, the Exchange adopted a provision designed to address the operation of the Plan.[5] Finally, in 2014, the Exchange adopted two additional provisions providing that: (i) A series of transactions in a particular security on one or more trading days may be viewed as one event if all such transactions were effected based on the same fundamentally incorrect or grossly misinterpreted issuance information resulting in a severe valuation error for all such transactions; and (ii) in the event of any disruption or malfunction in the operation of the electronic communications and trading facilities of an Exchange, another SRO, or responsible single plan processor in connection with the transmittal or receipt of a trading halt, an Officer, acting on his or her own motion, shall nullify any transaction that occurs after a trading halt has been declared by the primary listing market for a security and before such trading halt has officially ended according to the primary listing market.[6]

On December 26, 2018, the Commission published the proposed Eighteenth Amendment[7] to the Plan to Address Extraordinary Market Volatility Pursuant to Rule 608 of Regulation NMS under the Act (the ''Limit Up-Limit Down Plan'' or the ''Plan'')[8] to allow the Plan to operate on a permanent, rather than pilot, basis. On April 8, 2019, the Exchange amended BYX Rule 11.17 to untie the pilot program's effectiveness from that of the Plan and to extend the pilot's effectiveness to the close of business on October 18, 2019 in order allow the Exchange and other national securities exchanges additional time to consider further amendments, if any, to the clearly erroneous execution rules in light of the proposed Eighteenth Amendment to the Plan.[9] On April 17, 2019, the Commission published an approval of the Eighteenth Amendment to allow the Plan to operate on a permanent, rather than pilot, basis.[10] On October 21, 2019, the Exchange amended BYX Rule 11.17 to extend the pilot's effectiveness to the close of business on April 20, 2020.[11] Finally, on March 18, 2020, the Exchange amended BYX Rule 11.17 to extend the pilot's effectiveness to the close of business on October 20, 2020.[12]

The Exchange now proposes to amend BYX Rule 11.17 to extend the pilot's effectiveness to the close of business on

[51] 17 CFR 200.30–3(a)(12).

[1] 15 U.S.C. 78s(b)(1).

[2] 17 CFR 240.19b–4.

[3] *See* Securities Exchange Act Release No. 88496 (March 27, 2020), 85 FR 18600 (April 2, 2020) (SR–CboeBYX–2020–010).

[4] *See* Securities Exchange Act Release No. 63097 (Oct. 13, 2010), 75 FR 64767 (Oct. 20, 2010) (SR–BYX–2010–002).

[5] *See* Securities Exchange Act Release No. 68798 (Jan. 31, 2013), 78 FR 8628 (Feb. 6, 2013) (SR–BYX–2013–005).

[6] *See* Securities Exchange Act Release No. 71796 (March 25, 2014), 79 FR 18099 (March 31, 2014) (SR–BYX–2014–003).

[7] *See* Securities Exchange Act Release No. 84843 (December 18, 2018), 83 FR 66464 (December 26, 2018) (File No. 4–631) (''Eighteenth Amendment'').

[8] *See* Securities Exchange Act Release No. 67091 (May 31, 2012), 77 FR 33498 (June 6, 2012) (the ''Limit Up-Limit Down Release'').

[9] *See* Securities Exchange Act Release No. 85542 (Apr. 8, 2019), 84 FR 15009 (Apr. 12, 2019) (SR–CboeBYX–2019–003).

[10] *See* Securities Exchange Act Release No. 85623 (Apr. 11, 2019), 84 FR 16086 (Apr. 17, 2019) (File No. 4–631).

[11] *See* Securities Exchange Act Release No. 87364 (Oct. 21, 2019), 84 FR 57528 (Oct. 25, 2019) (SR–CboeBYX–2019–018).

[12] *See* supra note 5.

April 20, 2021. The Exchange understands that the other national securities exchanges and Financial Industry Regulatory Authority (''FINRA'') will also file similar proposals to extend their respective clearly erroneous execution pilot programs, the substance of which are identical to BYX Rule 11.17.

The Exchange does not propose any additional changes to BYX Rule 11.17. The Exchange believes the benefits to market participants from the more objective clearly erroneous executions rule should continue on a limited six month pilot basis. As the Plan was approved by the Commission to operate on a permanent, rather than pilot, basis the Exchange intends to assess whether additional changes should also be made to the operation of the clearly erroneous execution rules. Extending the effectiveness of BYX Rule 11.17 for an additional six months should provide the Exchange and other national securities exchanges additional time to consider further amendments, if any, to the clearly erroneous execution rules.

2. Statutory Basis

The Exchange believes the proposed rule change is consistent with the Securities Exchange Act of 1934 (the ''Act'') and the rules and regulations thereunder applicable to the Exchange and, in particular, the requirements of Section 6(b) of the Act.[13] Specifically, the Exchange believes the proposed rule change is consistent with the Section 6(b)(5)[14] requirements that the rules of an exchange be designed to prevent fraudulent and manipulative acts and practices, to promote just and equitable principles of trade, to foster cooperation and coordination with persons engaged in regulating, clearing, settling, processing information with respect to, and facilitating transactions in securities, to remove impediments to and perfect the mechanism of a free and open market and a national market system, and, in general, to protect investors and the public interest. Additionally, the Exchange believes the proposed rule change is consistent with the Section 6(b)(5)[15] requirement that the rules of an exchange not be designed to permit unfair discrimination between customers, issuers, brokers, or dealers.

In particular, the Exchange believes that extending the clearly erroneous execution pilot under BYX Rule 11.17 for an additional six months would help assure that the determination of whether a clearly erroneous trade has occurred will be based on clear and objective criteria, and that the resolution of the incident will occur promptly through a transparent process. The proposed rule change would also help assure consistent results in handling erroneous trades across the U.S. equities markets, thus furthering fair and orderly markets, the protection of investors and the public interest. Based on the foregoing, the Exchange believes the amended clearly erroneous executions rule should continue to be in effect on a pilot basis while the Exchange and the other national securities exchanges consider and develop a permanent proposal for clearly erroneous execution reviews.

B. Self-Regulatory Organization's Statement on Burden on Competition

The Exchange does not believe that the proposed rule change would impose any burden on competition that is not necessary or appropriate in furtherance of the purposes of the Act. To the contrary, the Exchange understands that FINRA and other national securities exchanges will also file similar proposals to extend their respective clearly erroneous execution pilot programs. Thus, the proposed rule change will help to ensure consistency across market centers without implicating any competitive issues.

C. Self-Regulatory Organization's Statement on Comments on the Proposed Rule Change Received From Members, Participants, or Others

No comments were solicited or received on the proposed rule change.

III. Date of Effectiveness of the Proposed Rule Change and Timing for Commission Action

Because the foregoing proposed rule change does not: (i) Significantly affect the protection of investors or the public interest; (ii) impose any significant burden on competition; and (iii) become operative for 30 days from the date on which it was filed, or such shorter time as the Commission may designate, it has become effective pursuant to Section 19(b)(3)(A) of the Act[16] and Rule 19b–4(f)(6) thereunder.[17]

A proposed rule change filed under Rule 19b–4(f)(6)[18] normally does not become operative prior to 30 days after the date of the filing. However, Rule 19b–4(f)(6)(iii)[19] permits the Commission to designate a shorter time if such action is consistent with the protection of investors and the public interest. The Exchange has asked the Commission to waive the 30-day operative delay so that the proposed rule change may become effective and operative immediately upon filing. The Commission believes that waiving the 30-day operative delay is consistent with the protection of investors and the public interest, as it will allow the current clearly erroneous execution pilot program to continue uninterrupted, without any changes, while the Exchange and the other national securities exchanges consider a permanent proposal for clearly erroneous execution reviews. For this reason, the Commission hereby waives the 30-day operative delay and designates the proposed rule change as operative upon filing.[20]

At any time within 60 days of the filing of the proposed rule change, the Commission summarily may temporarily suspend such rule change if it appears to the Commission that such action is necessary or appropriate in the public interest, for the protection of investors, or otherwise in furtherance of the purposes of the Act. If the Commission takes such action, the Commission shall institute proceedings to determine whether the proposed rule should be approved or disapproved.

IV. Solicitation of Comments

Interested persons are invited to submit written data, views, and arguments concerning the foregoing, including whether the proposed rule change is consistent with the Act. Comments may be submitted by any of the following methods:

Electronic Comments

- Use the Commission's internet comment form (*http://www.sec.gov/rules/sro.shtml*); or
- Send an email to *rule-comments@sec.gov.* Please include File Number SR–CboeBYX–2020–030 on the subject line.

Paper Comments

- Send paper comments in triplicate to Secretary, Securities and Exchange Commission, 100 F Street NE, Washington, DC 20549–1090.

All submissions should refer to File Number SR–CboeBYX–2020–030. This

[13] 15 U.S.C. 78f(b).

[14] 15 U.S.C. 78f(b)(5).

[15] *Id.*

[16] 15 U.S.C. 78s(b)(3)(A).

[17] 17 CFR 240.19b–4(f)(6). In addition, Rule 19b–4(f)(6)(iii) requires a self-regulatory organization to give the Commission written notice of its intent to file the proposed rule change, along with a brief description and text of the proposed rule change, at least five business days prior to the date of filing of the proposed rule change, or such shorter time as designated by the Commission. The Exchange has satisfied this requirement.

[18] 17 CFR 240.19b–4(f)(6).

[19] 17 CFR 240.19b–4(f)(6)(iii).

[20] For purposes only of waiving the 30-day operative delay, the Commission has also considered the proposed rule's impact on efficiency, competition, and capital formation. *See* 15 U.S.C. 78c(f).

file number should be included on the subject line if email is used. To help the Commission process and review your comments more efficiently, please use only one method. The Commission will post all comments on the Commission's internet website (*http://www.sec.gov/rules/sro.shtml*). Copies of the submission, all subsequent amendments, all written statements with respect to the proposed rule change that are filed with the Commission, and all written communications relating to the proposed rule change between the Commission and any person, other than those that may be withheld from the public in accordance with the provisions of 5 U.S.C. 552, will be available for website viewing and printing in the Commission's Public Reference Room, 100 F Street NE, Washington, DC 20549, on official business days between the hours of 10:00 a.m. and 3:00 p.m. Copies of the filing also will be available for inspection and copying at the principal office of the Exchange. All comments received will be posted without change. Persons submitting comments are cautioned that we do not redact or edit personal identifying information from comment submissions. You should submit only information that you wish to make available publicly. All submissions should refer to File Number SR–CboeBYX–2020–030 and should be submitted on or before November 16, 2020.

For the Commission, by the Division of Trading and Markets, pursuant to delegated authority.[21]

J. Matthew DeLesDernier,

Assistant Secretary.

[FR Doc. 2020–23572 Filed 10–23–20; 8:45 am]

BILLING CODE 8011–01–P

SECURITIES AND EXCHANGE COMMISSION

[Release No. 34–90229; File No. SR–CBOE–2020–095]

Self-Regulatory Organizations; Cboe Exchange, Inc.; Notice of Filing and Immediate Effectiveness of a Proposed Rule Change To Amend Its Fees Schedule To Adopt New Fee Codes Related to the Execution of Equity Legs of a Stock-Option Order

October 20, 2020.

Pursuant to Section 19(b)(1) of the Securities Exchange Act of 1934 (the ''Act''),[1] and Rule 19b–4 thereunder,[2] notice is hereby given that on October 7, 2020, Cboe Exchange, Inc. (the ''Exchange'' or ''Cboe Options'') filed with the Securities and Exchange Commission (the ''Commission'') the proposed rule change as described in Items I, II, and III below, which Items have been prepared by the Exchange. The Commission is publishing this notice to solicit comments on the proposed rule change from interested persons.

I. Self-Regulatory Organization's Statement of the Terms of Substance of the Proposed Rule Change

Cboe Exchange, Inc. (the ''Exchange'' or ''Cboe'') is filing with the Securities and Exchange Commission (''Commission'') a proposal to amend its Fees Schedule to adopt new fee codes related to the execution of equity legs of a stock-option order. The text of the proposed rule change is provided in Exhibit 5.

The text of the proposed rule change is also available on the Exchange's website (*http://www.cboe.com/AboutCBOE/CBOELegalRegulatoryHome.aspx*), at the Exchange's Office of the Secretary, and at the Commission's Public Reference Room.

II. Self-Regulatory Organization's Statement of the Purpose of, and Statutory Basis for, the Proposed Rule Change

In its filing with the Commission, the Exchange included statements concerning the purpose of and basis for the proposed rule change and discussed any comments it received on the proposed rule change. The text of these statements may be examined at the places specified in Item IV below. The Exchange has prepared summaries, set forth in sections A, B, and C below, of the most significant aspects of such statements.

A. Self-Regulatory Organization's Statement of the Purpose of, and Statutory Basis for, the Proposed Rule Change

1. Purpose

The Exchange proposes to amend its fee schedule to adopt a new fee codes for equity legs of a stock-option orders managed by additional designated broker-dealers, effective October 7, 2020.

The Exchange first notes that it operates in a highly competitive market in which market participants can readily direct order flow to competing venues if they deem fee levels at a particular venue to be excessive or incentives to be insufficient. More specifically, the Exchange is only one of 16 options venues to which market participants may direct their order flow. Based on publicly available information, no single options exchange has more than 16% of the market share.[3] Thus, in such a low-concentrated and highly competitive market, no single options exchange possesses significant pricing power in the execution of option order flow. The Exchange believes that the ever-shifting market share among the exchanges from month to month demonstrates that market participants can shift order flow or discontinue to reduce use of certain categories of products in response to fee changes. Accordingly, competitive forces constrain the Exchange's transaction fees, and market participants can readily trade on competing venues if they deem pricing levels at those other venues to be more favorable. In response to competitive pricing, the Exchange, like other options exchanges, offers rebates and assesses fees for certain order types executed on or routed through the Exchange.

Stock-option orders are complex instruments that constitute the purchase or sale of a stated number of units of an underlying stock or a security convertible into the underlying stock coupled with the purchase or sale of an option contract(s) on the opposite side of the market and execute in the same manner as complex orders. Through this functionality, the stock portions of stock-option strategy orders are electronically communicated by the Exchange to a designated broker-dealer (currently, Penserrra and Cowen are the only broker-dealers that may be designated for this service), who then manages the execution of such stock portions. Currently, the Exchange assesses a stock handling fee of $0.0010 per share for the processing and routing by the Exchange of the stock portion of stock-option strategy orders communicated to Cowen (*i.e.,* yielding fee code EQ).[4] The stock handling fee covers the fees charges by the outside venue that prints the trade, as well as assists in covering the Exchange's costs in matching these stock-option orders against other stock option orders on the complex book. Additionally, the Exchange also largely passes through to

[21] 17 CFR 200.30–3(a)(12).

[1] 15 U.S.C. 78s(b)(1).

[2] 17 CFR 240.19b–4.

[3] *See* Cboe Global Markets U.S. Options Market Volume Monthly Summary (October 2, 2020), available at *https://markets.cboe.com/us/options/market_statistics/.*

[4] *See* Securities Exchange Act Release No. 67383 (July 10, 2012), 77 FR 41841 (July 16, 2012) (SR–CBOE–2012–063) (stating the stock portions of stock-option strategy orders will be electronically communicated by the Exchange to a designated broker-dealer, who will then manage the execution of such stock portions).

Trading Permit Holders (''TPHs'') the fees assessed to the Exchange by the designated broker, Cowen, that may manage the execution of these stock portions of stock-option strategy orders. The fee schedule also provides for a cap of $50 per execution for orders yielding fee code EQ, which aligns with how Cowen applies a cap to the execution management of the stock portion of stock-option strategy orders. In addition to this, the Exchange also currently assesses $0.00 for equity leg orders whose executions are managed by Penserra (*i.e.,* yielding fee code EP). Unlike Cowen, Penserra does not assess the Exchange fees for managing the stock portion of a stock-option order, but assesses and bills its customers directly.[5] Therefore, the Exchange assess no stock handling fee for such orders managed by Penserra as it does to (in part) recoup the fees assessed to the Exchange by Cowen.

The Exchange proposes to amend its fee schedule to reflect the option of three additional designated broker-dealers, Libucki, FOG and SRT, to manage the execution of the stock portion of a stock-option strategy order. Specifically, the Exchange proposes to adopt: Fee code EL, applicable to equity leg orders whose executions are managed by Libucki; fee code EF, applicable to equity leg orders whose executions are managed by FOG; and fee code ES, applicable to equity leg orders whose executions are managed by SRT. Like Penserra, the three additional designated broker-dealers will not assess the Exchange fees for managing the stock-portion of a stock-option order, but rather will assess and bill their customers directly, and therefore, the Exchange does not wish to assess a stock handling fee on stock-option orders yielding fee codes EL, EF and ES. The proposed rule change reflects in the Stock Portion of Stock-Option Strategy Orders table of the Fees Schedule that, along with stock-option strategy orders managed by Penserra, such orders managed by Libucki, FOG and SRT will not be subject to a fee.

2. Statutory Basis

The Exchange believes that the proposed rule change is consistent with Section 6 of the Act,[6] in general, and furthers the requirements of Section 6(b)(4),[7] in particular, as it is designed to provide for the equitable allocation of reasonable dues, fees and other charges among its facilities and does not unfairly discriminate between customers, issuers, brokers or dealers. The Exchange also believes that the proposed rule change is consistent with the objectives of Section 6(b)(5) requirements that the rules of an exchange be designed to prevent fraudulent and manipulative acts and practices, to promote just and equitable principles of trade, to foster cooperation and coordination with persons engaged in regulating, clearing, settling, processing information with respect to, and facilitating transactions in securities, to remove impediments to and perfect the mechanism of a free and open market and a national market system, and, in general, to protect investors and the public interest, and, particularly, is not designed to permit unfair discrimination between customers, issuers, brokers, or dealers.

The Exchange believes that its proposed change to adopt fee codes EL, EF and ES, which will assess no fee for stock portions of stock-option strategy order executions managed by Libucki, FOG and SRT, respectively, is consistent with Section 6(b)(4) of the Act in that the proposal is reasonable, equitable and not unfairly discriminatory. Specifically, the Exchange believes the proposal is reasonable as market participants will not be subject to a fee for the execution of the stock-portion of a stock-option order handled by these designated broker-dealers. The Exchange believes it's appropriate to not assess a fee for orders managed by these three broker-dealers as they will directly charge customers for the stock portion of stock-option strategy orders and not charge the Exchange (which would, if charged, pass those fees through to customers). Assessing no charge for orders yielding the proposed fee codes is also reasonable, equitable and not unfairly discriminatory because the Exchange currently assesses no charge for stock-option orders managed by another designated broker-dealer, Penserra, for the same reason Penserra also directly charges customers instead of the Exchange for handling of the equity portion of a stock-option order. Further, the Exchange believes the proposal is equitable and not unfairly discriminatory because the proposed change applies to all TPHs and all TPHs that execute stock-option orders in the complex book will have the option to utilize Libucki, FOG and SRT to manage the execution of the stock portion of their stock-option strategy orders.

B. Self-Regulatory Organization's Statement on Burden on Competition

The Exchange does not believe that the proposed rule change will impose any burden on competition that is not necessary or appropriate in furtherance of the purposes of the Act. The Exchange does not believe that the proposed rule change will impose any burden on competition that is not necessary or appropriate in furtherance of the purposes of the Act. Specifically, the Exchange does not believe that the proposed change will impose any burden on intramarket competition that is not necessary or appropriate in furtherance of the purposes of the Act because the proposed change will apply uniformly to the stock portions of all market participants' stock-option strategy orders that are handled by Libucki, FOG and SRT, respectively. The proposed rule change provides TPHs with additional options regarding the Exchange's handling of their stock-option orders.

The Exchange does not believe that the proposed rule change will impose any burden on intermarket competition that is not necessary or appropriate in furtherance of the purposes of the Act. As previously discussed, the Exchange operates in a highly competitive market. TPHs have numerous alternative venues that they may participate on and direct their order flow, including 15 other options exchanges. Based on publicly available information, no single options exchange has more than 16% of the market share.[8] Therefore, no exchange possesses significant pricing power in the execution of option order flow. In such an environment, the Exchange must continually adjust its fees to remain competitive with other exchanges and to attract order flow to the Exchange. Indeed, participants can readily choose to send their orders to other exchange, and, additionally off-exchange venues, if they deem fee levels at those other venues to be more favorable. Moreover, the Commission has repeatedly expressed its preference for competition over regulatory intervention in determining prices, products, and services in the securities markets. Specifically, in Regulation NMS, the Commission highlighted the importance of market forces in determining prices and SRO revenues and, also, recognized that current regulation of the market system ''has been remarkably successful in promoting market competition in its broader forms that are most important to

[5] The Exchange notes it is possible Cowen directly charges fees to customers in addition to the stock handling fee the Exchange charges.

[6] 15 U.S.C. 78f.

[7] 15 U.S.C. 78f(b)(4).

[8] *See supra* note 3.

investors and listed companies.'' [9] The fact that this market is competitive has also long been recognized by the courts. In *NetCoalition* v. *Securities and Exchange Commission,* the D.C. Circuit stated as follows: ''[n]o one disputes that competition for order flow is 'fierce.' . . . As the SEC explained, '[i]n the U.S. national market system, buyers and sellers of securities, and the broker-dealers that act as their order-routing agents, have a wide range of choices of where to route orders for execution'; [and] 'no exchange can afford to take its market share percentages for granted' because 'no exchange possesses a monopoly, regulatory or otherwise, in the execution of order flow from broker dealers'. . ..'' [10] Accordingly, the Exchange does not believe its proposed fee change imposes any burden on competition that is not necessary or appropriate in furtherance of the purposes of the Act.

C. Self-Regulatory Organization's Statement on Comments on the Proposed Rule Change Received From Members, Participants, or Others

The Exchange neither solicited nor received comments on the proposed rule change.

III. Date of Effectiveness of the Proposed Rule Change and Timing for Commission Action

The foregoing rule change has become effective pursuant to Section 19(b)(3)(A) of the Act [11] and paragraph (f) of Rule 19b–4 [12] thereunder. At any time within 60 days of the filing of the proposed rule change, the Commission summarily may temporarily suspend such rule change if it appears to the Commission that such action is necessary or appropriate in the public interest, for the protection of investors, or otherwise in furtherance of the purposes of the Act. If the Commission takes such action, the Commission will institute proceedings to determine whether the proposed rule change should be approved or disapproved.

IV. Solicitation of Comments

Interested persons are invited to submit written data, views and arguments concerning the foregoing, including whether the proposed rule change is consistent with the Act.

[9] *See* Securities Exchange Act Release No. 51808 (June 9, 2005), 70 FR 37496, 37499 (June 29, 2005).

[10] *NetCoalition* v. *SEC,* 615 F.3d 525, 539 (D.C. Cir. 2010) (quoting Securities Exchange Act Release No. 59039 (December 2, 2008), 73 FR 74770, 74782–83 (December 9, 2008) (SR–NYSEArca–2006–21)).

[11] 15 U.S.C. 78s(b)(3)(A).

[12] 17 CFR 240.19b–4(f).

Comments may be submitted by any of the following methods:

Electronic Comments

- Use the Commission's internet comment form (*http://www.sec.gov/rules/sro.shtml*); or
- Send an email to *rule-comments@sec.gov.* Please include File Number SR–CBOE–2020–095 on the subject line.

Paper Comments

- Send paper comments in triplicate to Secretary, Securities and Exchange Commission, 100 F Street NE, Washington, DC 20549–1090.

All submissions should refer to File Number SR–CBOE–2020–095. This file number should be included on the subject line if email is used. To help the Commission process and review your comments more efficiently, please use only one method. The Commission will post all comments on the Commission's internet website (*http://www.sec.gov/rules/sro.shtml*). Copies of the submission, all subsequent amendments, all written statements with respect to the proposed rule change that are filed with the Commission, and all written communications relating to the proposed rule change between the Commission and any person, other than those that may be withheld from the public in accordance with the provisions of 5 U.S.C. 552, will be available for website viewing and printing in the Commission's Public Reference Room, 100 F Street NE, Washington, DC 20549, on official business days between the hours of 10:00 a.m. and 3:00 p.m. Copies of the filing also will be available for inspection and copying at the principal office of the Exchange. All comments received will be posted without change. Persons submitting comments are cautioned that we do not redact or edit personal identifying information from comment submissions. You should submit only information that you wish to make available publicly. All submissions should refer to File Number SR–CBOE–2020–095 and should be submitted on or before November 16, 2020.

For the Commission, by the Division of Trading and Markets, pursuant to delegated authority.[13]

J. Matthew DeLesDernier,

Assistant Secretary.

[FR Doc. 2020–23571 Filed 10–23–20; 8:45 am]

BILLING CODE 8011–01–P

[13] 17 CFR 200.30–3(a)(12).

SECURITIES AND EXCHANGE COMMISSION

Sunshine Act Meetings

TIME AND DATE: Notice is hereby given, pursuant to the provisions of the Government in the Sunshine Act, Public Law 94–409, the Securities and Exchange Commission will hold an Open Meeting on Wednesday, October 28, 2020, at 10:00 a.m.

PLACE: The meeting will be webcast on the Commission's website at *www.sec.gov.*

STATUS: This meeting will begin at 10:00 a.m. (ET) and will be open to the public via audio webcast only on the Commission's website at *www.sec.gov.*

MATTERS TO BE CONSIDERED: The Commission will consider whether to adopt rules and related amendments designed to provide an updated and more comprehensive approach to the regulation of funds' use of derivatives and other transactions while enhancing investor protections. The amendments the Commission will consider also would include new reporting requirements to enhance the Commission's ability to effectively oversee funds' use of derivatives. The Commission also will consider whether to rescind existing guidance and exemptive relief addressing derivatives and other transactions that would be covered by this new regulatory framework.

CONTACT PERSON FOR MORE INFORMATION: For further information and to ascertain what, if any, matters have been added, deleted or postponed, please contact Vanessa A. Countryman, Office of the Secretary, at (202) 551–5400.

Dated: October 21, 2020.

Vanessa A. Countryman,

Secretary.

[FR Doc. 2020–23706 Filed 10–22–20; 4:15 pm]

BILLING CODE 8011–01–P

SECURITIES AND EXCHANGE COMMISSION

[Release No. 34–90228; File No. SR–CboeEDGX–2020–048]

Self-Regulatory Organizations; Cboe EDGX Exchange, Inc.; Notice of Filing and Immediate Effectiveness of a Proposed Rule Change To Amend Its Fees Schedule To Adopt New Fee Codes Related to the Execution of Equity Legs of a Stock-Option Order

October 20, 2020.

Pursuant to Section 19(b)(1) of the Securities Exchange Act of 1934 (the

''Act''),[1] and Rule 19b–4 thereunder,[2] notice is hereby given that on October 7, 2020, Cboe EDGX Exchange, Inc. (the ''Exchange'' or ''EDGX'') filed with the Securities and Exchange Commission (the ''Commission'') the proposed rule change as described in Items I, II, and III below, which Items have been prepared by the Exchange. The Commission is publishing this notice to solicit comments on the proposed rule change from interested persons.

I. Self-Regulatory Organization's Statement of the Terms of Substance of the Proposed Rule Change

Cboe EDGX Exchange, Inc. (the ''Exchange'' or ''EDGX'') is filing with the Securities and Exchange Commission (''Commission'') a proposal to amend its Fees Schedule to adopt new fee codes related to the execution of equity legs of a stock-option order. The text of the proposed rule change is provided in Exhibit 5.

The text of the proposed rule change is also available on the Exchange's website (*http://markets.cboe.com/us/options/regulation/rule_filings/edgx/*), at the Exchange's Office of the Secretary, and at the Commission's Public Reference Room.

II. Self-Regulatory Organization's Statement of the Purpose of, and Statutory Basis for, the Proposed Rule Change

In its filing with the Commission, the Exchange included statements concerning the purpose of and basis for the proposed rule change and discussed any comments it received on the proposed rule change. The text of these statements may be examined at the places specified in Item IV below. The Exchange has prepared summaries, set forth in sections A, B, and C below, of the most significant aspects of such statements.

A. Self-Regulatory Organization's Statement of the Purpose of, and Statutory Basis for, the Proposed Rule Change

1. Purpose

The Exchange proposes to amend its fee schedule to adopt a new fee codes for equity legs of a stock-option orders managed by additional designated broker-dealers, effective October 7, 2020.

The Exchange first notes that it operates in a highly competitive market in which market participants can readily direct order flow to competing venues if they deem fee levels at a particular venue to be excessive or incentives to be insufficient. More specifically, the Exchange is only one of 16 options venues to which market participants may direct their order flow. Based on publicly available information, no single options exchange has more than 16% of the market share.[3] Thus, in such a low-concentrated and highly competitive market, no single options exchange possesses significant pricing power in the execution of option order flow. The Exchange believes that the ever-shifting market share among the exchanges from month to month demonstrates that market participants can shift order flow or discontinue to reduce use of certain categories of products in response to fee changes. Accordingly, competitive forces constrain the Exchange's transaction fees, and market participants can readily trade on competing venues if they deem pricing levels at those other venues to be more favorable. In response to competitive pricing, the Exchange, like other options exchanges, offers rebates and assesses fees for certain order types executed on or routed through the Exchange.

Stock-option orders are complex instruments that constitute the purchase or sale of a stated number of units of an underlying stock or a security convertible into the underlying stock coupled with the purchase or sale of an option contract(s) on the opposite side of the market and execute in the same manner as complex orders. Through this functionality, the stock portions of stock-option strategy orders are electronically communicated by the Exchange to a designated broker-dealer (currently, Penserra and Cowen are the only broker-dealers that may be designated for this service), who then manages the execution of such stock portions. Currently, the Exchange assesses a stock handling fee of $0.0010 per share for the processing and routing by the Exchange of the stock portion of stock-option strategy orders communicated to Cowen (*i.e.,* yielding fee code EQ).[4] The stock handling fee covers the fees charges by the outside venue that prints the trade, as well as assists in covering the Exchange's costs in matching these stock-option orders against other stock option orders on the complex book. Additionally, the Exchange also largely passes through to Trading Permit Holders (''TPHs'') the fees assessed to the Exchange by the designated broker, Cowen, that may manage the execution of these stock portions of stock-option strategy orders. The fee schedule also provides for a cap of $50 per execution for orders yielding fee code EQ, which aligns with how Cowen applies a cap to the execution management of the stock portion of stock-option strategy orders. In addition to this, the Exchange also currently assesses $0.00 for equity leg orders whose executions are managed by Penserra (*i.e.,* yielding fee code EP). Unlike Cowen, Penserra does not assess the Exchange fees for managing the stock portion of a stock-option order, but assesses and bills its customers directly.[5] Therefore, the Exchange assess no stock handling fee for such orders managed by Penserra as it does to (in part) recoup the fees assessed to the Exchange by Cowen.

The Exchange proposes to amend its fee schedule to reflect the option of three additional designated broker-dealers, Libucki, FOG and SRT, to manage the execution of the stock portion of a stock-option strategy order. Specifically, under the Fee Codes and Associated Fees in the Fee Schedule, the Exchange proposes to adopt: Fee code EL, applicable to equity leg orders whose executions are managed by Libucki; fee code EF, applicable to equity leg orders whose executions are managed by FOG; and fee code ES, applicable to equity leg orders whose executions are managed by SRT. Like Penserra, the three additional designated broker-dealers will not assess the Exchange fees for managing the stock-portion of a stock-option order, but rather will assess and bill their customers directly, and therefore, the Exchange does not wish to assess a stock handling fee on stock-option orders yielding fee codes EL, EF and ES.

2. Statutory Basis

The Exchange believes that the proposed rule change is consistent with Section 6 of the Act,[6] in general, and furthers the requirements of Section 6(b)(4),[7] in particular, as it is designed to provide for the equitable allocation of reasonable dues, fees and other charges among its facilities and does not unfairly discriminate between customers, issuers, brokers or dealers.

[1] 15 U.S.C. 78s(b)(1).

[2] 17 CFR 240.19b–4.

[3] *See* Cboe Global Markets U.S. Options Market Volume Monthly Summary (October 2, 2020), available at *https://markets.cboe.com/us/options/market_statistics/.*

[4] *See* Securities Exchange Act Release No. 67383 (July 10, 2012), 77 FR 41841 (July 16, 2012) (SR–CBOE–2012–063) (stating that the stock portions of the stock-option strategy orders will be electronically communicated by the Exchange to a designated broker-dealer, who will then manage the execution of such stock portions).

[5] The Exchange notes it is possible Cowen directly charges fees to customers in addition to the stock handling fee the Exchange charges.

[6] 15 U.S.C. 78f.

[7] 15 U.S.C. 78f(b)(4).

The Exchange also believes that the proposed rule change is consistent with the objectives of Section 6(b)(5) requirements that the rules of an exchange be designed to prevent fraudulent and manipulative acts and practices, to promote just and equitable principles of trade, to foster cooperation and coordination with persons engaged in regulating, clearing, settling, processing information with respect to, and facilitating transactions in securities, to remove impediments to and perfect the mechanism of a free and open market and a national market system, and, in general, to protect investors and the public interest, and, particularly, is not designed to permit unfair discrimination between customers, issuers, brokers, or dealers.

The Exchange believes that its proposed change to adopt fee codes EL, EF and ES, which will assess no fee for stock portions of stock-option strategy order executions managed by Libucki, FOG and SRT, respectively, is consistent with Section 6(b)(4) of the Act in that the proposal is reasonable, equitable and not unfairly discriminatory. Specifically, the Exchange believes the proposal is reasonable as market participants will not be subject to a fee for the execution of the stock-portion of a stock-option order handled by these designated broker-dealers. The Exchange believes it's appropriate to not assess a fee for orders managed by these three broker-dealers as they will directly charge customers for the stock portion of stock-option strategy orders and not charge the Exchange (which would, if charged, pass those fees through to customers). Assessing no charge for orders yielding the proposed fee codes is also reasonable, equitable and not unfairly discriminatory because the Exchange currently assesses no charge for stock-option orders managed by another designated broker-dealer, Penserra, for the same reason Penserra also directly charges customers instead of the Exchange for handling of the equity portion of a stock-option order. Further, the Exchange believes the proposal is equitable and not unfairly discriminatory because the proposed change applies to all TPHs and all TPHs that execute stock-option orders in the complex book will have the option to utilize Libucki, FOG and SRT to manage the execution of the stock portion of their stock-option strategy orders.

B. Self-Regulatory Organization's Statement on Burden on Competition

The Exchange does not believe that the proposed rule change will impose any burden on competition that is not necessary or appropriate in furtherance of the purposes of the Act. The Exchange does not believe that the proposed rule change will impose any burden on competition that is not necessary or appropriate in furtherance of the purposes of the Act. Specifically, the Exchange does not believe that the proposed change will impose any burden on intramarket competition that is not necessary or appropriate in furtherance of the purposes of the Act because the proposed change will apply uniformly to the stock portions of all market participants' stock-option strategy orders that are handled by Libucki, FOG and SRT, respectively. The proposed rule change provides TPHs with additional options regarding the Exchange's handling of their stock-option orders.

The Exchange does not believe that the proposed rule change will impose any burden on intermarket competition that is not necessary or appropriate in furtherance of the purposes of the Act. As previously discussed, the Exchange operates in a highly competitive market. TPHs have numerous alternative venues that they may participate on and direct their order flow, including 15 other options exchanges. Based on publicly available information, no single options exchange has more than 16% of the market share.[8] Therefore, no exchange possesses significant pricing power in the execution of option order flow. In such an environment, the Exchange must continually adjust its fees to remain competitive with other exchanges and to attract order flow to the Exchange. Indeed, participants can readily choose to send their orders to other exchange, and, additionally off-exchange venues, if they deem fee levels at those other venues to be more favorable. Moreover, the Commission has repeatedly expressed its preference for competition over regulatory intervention in determining prices, products, and services in the securities markets. Specifically, in Regulation NMS, the Commission highlighted the importance of market forces in determining prices and SRO revenues and, also, recognized that current regulation of the market system ''has been remarkably successful in promoting market competition in its broader forms that are most important to investors and listed companies.'' [9] The fact that this market is competitive has also long been recognized by the courts. In *NetCoalition* v. *Securities and Exchange Commission,* the D.C. Circuit stated as follows: ''[n]o one disputes that competition for order flow is 'fierce.' . . . As the SEC explained, '[i]n the U.S. national market system, buyers and sellers of securities, and the broker-dealers that act as their order-routing agents, have a wide range of choices of where to route orders for execution'; [and] 'no exchange can afford to take its market share percentages for granted' because 'no exchange possesses a monopoly, regulatory or otherwise, in the execution of order flow from broker dealers'. . . .''.[10] Accordingly, the Exchange does not believe its proposed fee change imposes any burden on competition that is not necessary or appropriate in furtherance of the purposes of the Act.

C. Self-Regulatory Organization's Statement on Comments on the Proposed Rule Change Received From Members, Participants, or Others

The Exchange neither solicited nor received comments on the proposed rule change.

III. Date of Effectiveness of the Proposed Rule Change and Timing for Commission Action

The foregoing rule change has become effective pursuant to Section 19(b)(3)(A) of the Act [11] and paragraph (f) of Rule 19b–4 [12] thereunder. At any time within 60 days of the filing of the proposed rule change, the Commission summarily may temporarily suspend such rule change if it appears to the Commission that such action is necessary or appropriate in the public interest, for the protection of investors, or otherwise in furtherance of the purposes of the Act. If the Commission takes such action, the Commission will institute proceedings to determine whether the proposed rule change should be approved or disapproved.

IV. Solicitation of Comments

Interested persons are invited to submit written data, views and arguments concerning the foregoing, including whether the proposed rule change is consistent with the Act. Comments may be submitted by any of the following methods:

Electronic Comments

- Use the Commission's internet comment form (*http://www.sec.gov/rules/sro.shtml);* or

[8] *See supra* note 3.

[9] *See* Securities Exchange Act Release No. 51808 (June 9, 2005), 70 FR 37496, 37499 (June 29, 2005).

[10] *NetCoalition* v. *SEC*, 615 F.3d 525, 539 (D.C. Cir. 2010) (quoting Securities Exchange Act Release No. 59039 (December 2, 2008), 73 FR 74770, 74782–83 (December 9, 2008) (SR–NYSEArca–2006–21)).

[11] 15 U.S.C. 78s(b)(3)(A).

[12] 17 CFR 240.19b–4(f).

• Send an email to *rule-comments@sec.gov.* Please include File Number SR–CboeEDGX–2020–048 on the subject line.

Paper Comments

• Send paper comments in triplicate to Secretary, Securities and Exchange Commission, 100 F Street NE, Washington, DC 20549–1090.

All submissions should refer to File Number SR–CboeEDGX–2020–048. This file number should be included on the subject line if email is used. To help the Commission process and review your comments more efficiently, please use only one method. The Commission will post all comments on the Commission's internet website (*http://www.sec.gov/rules/sro.shtml).* Copies of the submission, all subsequent amendments, all written statements with respect to the proposed rule change that are filed with the Commission, and all written communications relating to the proposed rule change between the Commission and any person, other than those that may be withheld from the public in accordance with the provisions of 5 U.S.C. 552, will be available for website viewing and printing in the Commission's Public Reference Room, 100 F Street NE, Washington, DC 20549, on official business days between the hours of 10:00 a.m. and 3:00 p.m. Copies of the filing also will be available for inspection and copying at the principal office of the Exchange. All comments received will be posted without change. Persons submitting comments are cautioned that we do not redact or edit personal identifying information from comment submissions. You should submit only information that you wish to make available publicly. All submissions should refer to File Number SR–CboeEDGX–2020–048 and should be submitted on or before November 16, 2020.

For the Commission, by the Division of Trading and Markets, pursuant to delegated authority.[13]

J. Matthew DeLesDernier,

Assistant Secretary.

[FR Doc. 2020–23570 Filed 10–23–20; 8:45 am]

BILLING CODE 8011–01–P

[13] 17 CFR 200.30–3(a)(12).

SELECTIVE SERVICE SYSTEM

Forms Submitted to the Office of Management and Budget for Extension of Clearance

AGENCY: Selective Service System.

ACTION: Notice.

The following forms have been submitted to the Office of Management and Budget (OMB) for extension of clearance in compliance with the Paperwork Reduction Act (44 U.S.C. Chapter 35):

SSS Forms 2, 3A, 3B and 3C

Title: Selective Service System Change of Information, Correction/Change Form, and Registration Status Forms.

Purpose: To insure the accuracy and completeness of the Selective Service System registration data.

Respondents: Registrants are required to report changes or corrections in data submitted on the SSS Form 1.

Frequency: When changes in a registrant's name or address occur.

Burden: A burden of two minutes or less on the individual respondent.

Change: Registrant may now update their email address and phone number.

Copies of the above identified forms can be obtained upon written request to the Selective Service System, Operations Directorate, 1515 Wilson Boulevard, Arlington, Virginia 22209–2425.

Written comments and recommendations for the proposed extension of clearance of the form should be sent within 60 days of the publication of this notice to the Selective Service System, Operations Directorate, 1515 Wilson Boulevard, Arlington, Virginia 22209–2425.

A copy of the comments should be sent to the Office of Information and Regulatory Affairs, Attention: Desk Officer, Selective Service System, Office of Management and Budget, New Executive Office Building, Room 3235, Washington, DC 20503.

Dated: October 21, 2020.

Wadi Yakhour,

Chief of Staff.

[FR Doc. 2020–23663 Filed 10–23–20; 8:45 am]

BILLING CODE 8015–01–P

SMALL BUSINESS ADMINISTRATION

Reporting and Recordkeeping Requirements Under OMB Review

AGENCY: Small Business Administration.

ACTION: 30-Day notice.

SUMMARY: The Small Business Administration (SBA) is seeking approval from the Office of Management and Budget (OMB) for the information collection described below. In accordance with the Paperwork Reduction Act (PRA) and OMB procedures, SBA is publishing this notice to allow all interested members of the public an additional 30 days to provide comments on the proposed collection of information.

DATES: Submit comments on or before November 25, 2020.

ADDRESSES: Comments should refer to the information collection by title and/or OMB Control Number and should be sent to: *Agency Clearance Officer,* Curtis Rich, Small Business Administration, 409 3rd Street SW, 5th Floor, Washington, DC 20416; and *SBA Desk Officer,* Office of Information and Regulatory Affairs, Office of Management and Budget, New Executive Office Building, Washington, DC 20503.

FOR FURTHER INFORMATION CONTACT: Curtis Rich, Agency Clearance Officer, (202) 205–7030 *curtis.rich@sba.gov.*

Copies: You may obtain a copy of the information collection and supporting documents from the Agency Clearance Officer.

SUPPLEMENTARY INFORMATION: Section 1102 of the Coronavirus Aid, Relief, and Economic Security (CARES) Act, Public Law 116–136, authorizes SBA to guarantee loans made by banks or other financial institutions under a new temporary program titled the ''Paycheck Protection Program'' (PPP). These loans are available to eligible small businesses, certain non-profit organizations, veterans' organizations, Tribal business concerns, independent contractors, and self-employed individuals adversely impacted by the COVID–19 Emergency. Proceeds of a PPP loan may be used for payroll costs, costs related to the continuation of group health care benefits during periods of paid sick, medical or family leave, and insurance premiums, mortgage interest payments, rent payments, utility payments, interest payments on other debt incurred prior to February 15, 2020, and to refinance an eligible SBA Economic Injury Disaster Loan. Under section 1106(b) of the CARES Act, a loan may be forgiven in full or in part if the PPP borrower uses the proceeds for payroll costs, payment of interest on a covered mortgage, payment on any covered rent obligation, and any covered utility payment.

In order to make the financial assistance available as expeditiously as possible after the PPP was authorized, SBA obtained emergency approval of this information collection. As required by the PRA, SBA is submitting the information collection to OMB for standard (non-emergency) review and approval to use the information

collection beyond the emergency expiration date, October 31, 2020.

Solicitation of Public Comments

Comments on this information collection may be submitted to the addresses listed above on (a) whether the collection of information is necessary for the agency to properly perform its functions; (b) whether the burden estimates are accurate; (c) whether there are ways to minimize the burden, including through the use of automated techniques or other forms of information technology; and (d) whether there are ways to enhance the quality, utility, and clarity of the information.

Title: Paycheck Protection Program.

OMB Control Number: 3245–0407.

(i) *SBA Form 2483, Paycheck Protection Program Borrower Application Form.*

Estimated Number of Respondents: 6,500,000.

Estimated Annual Responses: 6,500,000.

Estimated Annual Hour Burden: 866,667.

(ii) *SBA Form 2484, Paycheck Protection Program Lender's Application for 7(a) Guaranty.*

Estimated Number of Respondents: 5,200,000.

Estimated Annual Responses: 5,200,000.

Estimated Annual Hour Burden: 2,171,720.

(iii) *SBA Form 3506—CARES Act Section 1102 Lender Agreement.*

Number of Respondents: 751.

Total Annual Responses: 751.

Estimated Annual Hour Burden: 125.

(iv) *SBA Form 3507—CARES Act Section 1102 Lender Agreement—Non-Bank and Non-Insured Depository Institution Lender.*

Number of Respondents: 147.

Number of Responses: 147.

Total Estimated Annual Hour Burden: 61.

(v) *SBA Form 3508—Paycheck Protection Program—Loan Forgiveness Application.*

Estimated Number of Respondents: 1,303,000.

Estimated Annual Responses: 1,303,000.

Estimated Annual Hour Burden: 3,909,096.

(vi) *SBA Form 3508S, Paycheck Protection Program—PPP Loan Forgiveness Application Form 3508S.*

Estimated Number of Respondents: 3,574,000.

Estimated Annual Responses: 3,574,000.

Estimated Annual Hour Burden: 893,500.

(vii) *SBA Form 3508EZ—Paycheck Protection Program—PPP Loan Forgiveness Application Form 3508EZ.*

Estimated Number of Respondents: 335,096.

Estimated Annual Responses: 335,096.

Estimated Annual Hour Burden: 111,699.

(viii) *[Form Number N/A] Lender Reporting Requirements Concerning Requests for Loan Forgiveness.*

Estimated Number of Respondents: 5,200,000.

Estimated Annual Responses: 5,200,000.

Estimated Annual Hour Burden: 1,330,957.

(ix) *[Form Number N/A] Lender Reporting Requirements for SBA Loan Reviews.*

Estimated Number of Respondents: 1,950,000.

Estimated Annual Responses: 1,950,000.

Estimated Annual Hour Burden: 975,000.

(x) *SBA Form 3509—Loan Necessity Questionnaire (For-Profit Borrowers).*

Estimated Number of Respondents: 42,000.

Estimated Annual Responses: 42,000.

Estimated Annual Hour Burden: 67,833.

(xi) *SBA Form 3510—Loan Necessity Questionnaire (Non-Profit Borrowers).*

Estimated Number of Respondents: 10,000.

Estimated Annual Responses: 10,000.

Estimated Annual Hour Burden: 9,167.

Curtis Rich,

Management Analyst.

[FR Doc. 2020–23594 Filed 10–23–20; 8:45 am]

BILLING CODE 8026–03–P

DEPARTMENT OF STATE

[Public Notice 11230]

30-Day Notice of Proposed Information Collection: Certificate of Eligibility for Exchange Visitor Status (J–NONIMMIGRANT)

ACTION: Notice of request for public comment and submission to OMB of proposed collection of information.

SUMMARY: The Department of State has submitted the information collection described below to the Office of Management and Budget (OMB) for approval. In accordance with the Paperwork Reduction Act of 1995 we are requesting comments on this collection from all interested individuals and organizations. The purpose of this Notice is to allow 30 days for public comment.

DATES: Submit comments up to November 25, 2020.

ADDRESSES: Written comments and recommendations for the proposed information collection should be sent within 30 days of publication of this notice to *www.reginfo.gov/public/do/PRAMain.* Find this particular information collection by selecting ''Currently under 30-day Review—Open for Public Comments'' or by using the search function.

FOR FURTHER INFORMATION CONTACT: Direct requests for additional information regarding the collection listed in this notice, including requests for copies of the proposed collection instrument and supporting documents, to G. Kevin Saba, Director, Office of Policy and Program Support, Office of Private Sector Exchange, SA–4E, Washington, DC 20522–0505; the office may be reached by email at *JExchanges.@state.gov* and by telephone at (202) 634–4710.

SUPPLEMENTARY INFORMATION:

- *Title of Information Collection:* Certificate of Eligibility for Exchange Visitor Status (J-Nonimmigrant).
- *OMB Control Number:* 1405–0119.
- *Type of Request:* Revision of a Currently Approved Collection.
- *Originating Office:* Bureau of Educational and Cultural Affairs, Office of Private Sector Exchange (ECA/EC).
- *Form Number:* DS–2019.
- *Respondents:* U.S. Department of State designated sponsors.
- *Estimated Number of Respondents:* 1,500.
- *Estimated Number of Responses:* 325,000.
- *Average Time per Response:* 45 minutes.
- *Total Estimated Burden Time:* 243,750 hours.
- *Frequency:* On occasion.
- *Obligation to Respond:* Required to Obtain or Retain a Benefit.

We are soliciting public comments to permit the Department to:

- Evaluate whether the proposed information collection is necessary for the proper functions of the Department.
- Evaluate the accuracy of our estimate of the time and cost burden for this proposed collection, including the validity of the methodology and assumptions used.
- Enhance the quality, utility, and clarity of the information to be collected.
- Minimize the reporting burden on those who are to respond, including the

use of automated collection techniques or other forms of information technology.

Please note that comments submitted in response to this Notice are public record. Before including any detailed personal information, you should be aware that your comments as submitted, including your personal information, will be available for public review.

Abstract of Proposed Collection

The collection is the continuation of information collected and needed by the Bureau of Educational and Cultural Affairs in administering the Exchange Visitor Program (J-Nonimmigrant) under the provisions of the Mutual Educational and Cultural Exchange Act, as amended (22 U.S.C. 2451, *et seq.*). The Form DS–2019 is the document that provides the information needed to identify an individual (and spouse and dependents, where applicable) seeking to enter the United States as an Exchange Visitor in J-Nonimmigrant status. Minor changes have been made to the wording in the 212(e) section entitled Signature of Responsible Officer or Alternate Responsible Officer. This change does not increase cost or burden.

Methodology

Access to Form DS–2019 is made available to Department-designated sponsors electronically via the Student and Exchange Visitor Information System (SEVIS).

Kevin Bryant,

Deputy Director.

[FR Doc. 2020–23567 Filed 10–23–20; 8:45 am]

BILLING CODE 4710–05–P

DEPARTMENT OF TRANSPORTATION

Federal Aviation Administration

[Docket No. FAA–2020–0998; Notice of Availability Docket No. 20–ASO–26]

Notice of Availability of the Final Environmental Assessment (Final EA)/ Finding of No Significant Impact (FONSI) and the Record of Decision (ROD) for the South-Central Florida Metroplex Project

AGENCY: Federal Aviation Administration, (FAA), Department of Transportation.

ACTION: Notice of availability.

SUMMARY: The FAA, Eastern Service Center, is issuing this notice to advise the public of the availability of the Final Environmental Assessment (Final EA)/ Finding of No Significant Impact (FONSI) and the Record of Decision (ROD) for the South-Central Florida Metroplex Project.

FOR FURTHER INFORMATION CONTACT: Lisa Favors, Federal Aviation Administration, Operations Support Group, Eastern Service Center, 1701 Columbia Avenue, College Park, Georgia 30337, (404) 305–5604. Additional information about the FAA's actions and environmental review of this project is available at the following website: *http://www.metroplex environmental.com/fl_metroplex/fl_ introduction.html.*

SUPPLEMENTARY INFORMATION: The FAA prepared a Final Environmental Assessment (EA), dated October 15, 2020, to assess the potential environmental impacts of the South-Central Florida Metroplex project in compliance with the National Environmental Policy Act of 1969, 42 U.S.C. 4321 *et seq.* Council on Environmental Quality regulation, 40 CFR parts 1500–1508, the requirements of Section 106 of the National Historic Preservation Act, and all other applicable special purpose laws. The Final EA responds to agency and public comments received by the FAA and it updates the Draft EA issued on May 11, 2020. This notice announces that based on the information and analysis contained in the Final EA, and after reviewing comments received on the Draft EA, the FAA is issuing a Finding of No Significant Impact and Record of Decision (FONSI/ROD) for the South-Central Florida Metroplex Project. The FONSI/ROD documents the FAA's determination that the South-Central Florida Metroplex Project would not significantly affect the quality of the human environment and that an Environmental Impact Statement (EIS) is therefore not necessary. The FONSI/ ROD also documents the FAA's decision to proceed with the proposed action detailed in the Final EA. The South-Central Florida Metroplex Project will improve the operational efficiency of the national airspace system in the South-Central Florida area by optimizing aircraft arrival and departure procedures at a number of airports.

Availability: The Final EA and FONSI/ROD is available at the following locations:

(1) Online at *http://metroplex environmental.com.*

(2) Electronic Versions of the documentation have been sent to 117 libraries in the General Study Area with a request to make the digital document available to patrons. A complete list of these libraries with electronic copies of the documentation is available online at the website above. The FAA recognizes that libraries may be closed due to the COVID–19 public health emergency and, therefore, availability through these libraries may be impacted.

(3) If you are unable to access the documentation through one of these means, by contacting Lisa Favors at 404–305–5604.

Lisa Favors,

EPS Operations Support Group, Eastern Service Center, Air Traffic Organization.

[FR Doc. 2020–23534 Filed 10–23–20; 8:45 am]

BILLING CODE 4910–13–P

DEPARTMENT OF TRANSPORTATION

Federal Railroad Administration

[Docket No. FRA–2000–7257, Notice No. 91]

Railroad Safety Advisory Committee; Charter Renewal

AGENCY: Federal Railroad Administration (FRA), U.S. Department of Transportation (DOT).

ACTION: Announcement of charter renewal of the Railroad Safety Advisory Committee (RSAC).

SUMMARY: FRA announces the charter renewal of the RSAC, a Federal Advisory Committee established by the U.S. Secretary of Transportation in accordance with the Federal Advisory Committee Act to provide information, advice, and recommendations to the FRA Administrator on matters relating to railroad safety. This charter renewal will be effective for two years from the date it is filed with Congress.

FOR FURTHER INFORMATION CONTACT: Kenton Kilgore, RSAC Designated Federal Officer/RSAC Coordinator, FRA Office of Railroad Safety, 202–493–6286; or Larry Woolverton, Executive Officer, FRA Office of Railroad Safety, 202–493–6212.

SUPPLEMENTARY INFORMATION: This notice is provided in accordance with the Federal Advisory Committee Act (Pub. L. 92–463, 5 U.S.C. App. 2).[1] RSAC is composed of 34 representatives from stakeholder organizations representing various rail industry perspectives. The diversity of the committee ensures the requisite range of views and expertise necessary to discharge its responsibilities. Please see

[1] FRA notes it inadvertently published two notifications in the **Federal Register** identified as Notice No. 89 related to the RSAC. See 85 FR 55574 (Sep. 8, 2020), and 84 FR 57943 (Oct. 29, 2019). FRA is numbering this document as Notice No. 91, to reflect that it is actually the ninety-first notification related to the RSAC.

the RSAC website for additional information at *https://rsac.fra.dot.gov/.*

Issued in Washington, DC.

Quintin Kendall,

Deputy Administrator.

[FR Doc. 2020–23554 Filed 10–23–20; 8:45 am]

BILLING CODE 4910–06–P

DEPARTMENT OF TRANSPORTATION

National Highway Traffic Safety Administration

[Docket No. NHTSA–2018–0100; Notice 2]

Daimler Trucks North America, Denial of Petition for Decision of Inconsequential Noncompliance

AGENCY: National Highway Traffic Safety Administration (NHTSA), Department of Transportation (DOT).

ACTION: Notice of petition denial.

SUMMARY: Daimler Trucks North America (DTNA) has determined that certain model year (MY) 2011–2019 DTNA motor vehicles do not fully comply with Federal Motor Vehicle Safety Standard (FMVSS) No. 108, *Lamps, Reflective Devices, and Associated Equipment.* DTNA filed a noncompliance report dated September 19, 2018. DTNA subsequently petitioned NHTSA on October 11, 2018, for a decision that the subject noncompliance is inconsequential as it relates to motor vehicle safety. This document announces and explains the denial of DTNA's petition.

FOR FURTHER INFORMATION CONTACT: Leroy Angeles, Office of Vehicle Safety Compliance, NHTSA, telephone (202) 366–5304, facsimile (202) 366–3081.

SUPPLEMENTARY INFORMATION:

I. Overview

DTNA has determined that certain MY 2011–2019 DTNA motor vehicles do not fully comply with paragraph S6.2 of FMVSS No. 108, *Lamps, Reflective Devices, and Associated Equipment* (49 CFR 571.108). DTNA filed a noncompliance report dated September 19, 2018, pursuant to 49 CFR part 573, *Defect and Noncompliance Responsibility and Reports.* DTNA subsequently petitioned NHTSA on October 11, 2018, for an exemption from the notification and remedy requirements of 49 U.S.C. Chapter 301 on the basis that this noncompliance is inconsequential as it relates to motor vehicle safety pursuant to 49 U.S.C. 30118(d) and 30120(h) and 49 CFR part 556, *Exemption for Inconsequential Defect or Noncompliance.*

Notice of receipt of DTNA's petition was published with a 30-day public comment period on April 23, 2019, in the **Federal Register** (84 FR 16930). No comments were received. To view the petition and all supporting documents, log onto the Federal Docket Management System (FDMS) website at *https://www.regulations.gov/,* and then follow the online search instructions to locate docket number ''NHTSA–2018–0100.''

II. Vehicles Involved

Approximately 14,340 MY 2011–2019 Western Star 4700 and 4900, Freightliner Business Class M2, 114SD, 108SD, 122SD, and Coronado motor vehicles manufactured between May 4, 2010, and August 23, 2018, are potentially involved.

III. Noncompliance

In its noncompliance report, DTNA stated that the noncompliance is that the brake lights in the subject vehicles illuminate with Automatic Traction Control (ATC) activation and, therefore, do not meet the requirements specified in S6.2.1 of FMVSS No. 108.

IV. Rule Requirements

Paragraphs S6.2.1 and S7.3.5, Table I-a of FMVSS No. 108, include the requirements relevant to this petition. No additional lamp, reflective device, or other motor vehicle equipment is permitted to be installed that impairs the effectiveness of lighting equipment required by FMVSS No. 108. Stop lamps must be activated upon application of the service brakes. The stop lamps may also be activated by a device designed to retard the motion of the vehicle.

V. Summary of DTNA's Petition

DTNA describes the subject noncompliance and contends that the noncompliance is inconsequential as it relates to motor vehicle safety.

In support of its petition, DTNA offers the following reasoning:

1. ATC events occur during low traction conditions such as snow, ice, and mud. The duration of the event can be very short and may not even be noticed by the following driver. If brake light illumination for an ATC event is noticed, it would help to provide early warning of an adverse road condition ahead and encourage the following driver to slow down. Below are several examples of ATC events:

a. *Taking off from a stop:* ATC can be very helpful to a driver when taking off from a stop in low traction conditions. From time to time, a vehicle will park with one drive axle wheel end right over a patch of ice, and without ATC, it can be difficult to take off. This happens after the vehicle has been stopped and is trying to move. It seems unlikely that the activation of the brake lights during this ATC event would cause a safety concern to following drivers since the vehicle is stationary.

b. *Low speed:* At low speed, hazard warning lights are commonly used to warn other drivers of adverse road conditions such as those that are in effect when an ATC event may occur. Since the hazard lights may already be applied in this case, the addition of momentary brake light activation is unlikely to cause confusion.

c. *High Speed:* For an ATC event to occur at high speed, it would signify that road conditions have changed rapidly. One way it could happen is if the vehicle has been climbing a hill on dry roads in sub-freezing conditions and crosses a patch of ice. This causes a wheel to lose traction and the ATC applies brake force to that wheel end. The torque is transferred to other wheel ends causing a momentary brake light illumination. If it is a small ice patch, the event may be over and the vehicle may continue on its way. If the ice patch is large, it is imperative that the vehicle slows down to a safe speed under slick conditions and warns others of the impending slowdown. As soon as slick road conditions are noticed and wheels begin to slip, the driver would let up on the throttle.

Brakes are commonly applied causing the brake lights to illuminate when a driver sees or senses a change in road conditions such as an icy patch. Reducing vehicle speed in adverse conditions increases safety, so signaling changing road conditions to following drivers would improve safety and give them the opportunity to increase the following distance. DOT guidance supports this goal:

○ NHTSA's Winter Driving Tips says: ''Drive slowly. It's harder to control or stop your vehicle on a slick or snow-covered road. Increase your following distance enough so that you'll have plenty of time to stop for vehicles ahead of you.''

○ FMCSA released CMV Driving Tips; Tip #1 is: Reduce Your Driving Speed in Adverse Road and/or Weather Conditions. ''You should reduce your speed by ⅓ on wet roads and by ½ or more on snow-packed roads (*i.e.,* if you would normally be traveling at a speed of 60 mph on dry pavement, then on a wet road you should reduce your speed to 40 mph, and on a snow-packed road you should reduce your speed to 30 mph). When you come upon slick, icy roads you should drive slowly and cautiously and pull off the road if you

can no longer safely control the vehicle.''

2. DTNA states that it is not aware of any accidents, injuries, owner complaints, or field reports for brake light illumination triggered by ATC events concerning the subject vehicles.

3. DTNA notes that NHTSA has previously granted petitions for decisions of inconsequential noncompliance with lighting requirements where there were technical noncompliances that did not create a negative impact on safety.

a. DTNA cites a petition for inconsequentiality submitted by General Motors (GM) which was granted by NHTSA. *See General Motors Corp.; Grant of Application for Decision of Inconsequential Noncompliance,* 66 FR 32871 (June 18, 2001). This petition dealt with a situation in which certain vehicles could experience brief, unintended illumination of the center high-mounted stop lamp (CHMSL) if the hazard warning lamp switch was depressed to its limit of travel. NHTSA stated: ''The intended use of a hazard warning lamp and the momentary activation of a CHMSL do not provide a conflicting message. The illumination of the CHMSL is intended to signify that the vehicle's brakes are being applied and that the vehicle might be decelerating. Hazard warning lamps are intended as a more general message to nearby drivers that extra attention should be given to the vehicle. A brief illumination of the CHMSL while activating the hazard warning lamps would not confuse the intended general message, nor would the brief illumination in the absence of the other brake lamps cause confusion that the brakes were unintentionally applied.''

DTNA believes that the same situation exists in the present case, with temporary illumination of the brake lamps during ATC activation. The temporary brake light illumination serves to emphasize the message to following drivers that adverse or unusual road conditions may exist and they should pay close attention.

b. DTNA also cites another petition for inconsequentiality submitted by GM which was granted by NHTSA. *See General Motors, LLC, Grant of Petition for Decision of Inconsequential Noncompliance,* 83 FR 7847 (Feb. 2, 2018). This petition dealt with a situation in which, under certain conditions, the parking lamps on the subject vehicles failed to meet the requirement that parking lamps must be activated when headlamps are activated in a steady burning state. NHTSA stated: ''The Agency agrees with GM that in this case, this situation would have a low probability of occurrence and, if it should occur, it would neither be long-lasting nor likely to occur during a period when parking lamps are generally in use. Importantly, when the noncompliance does occur, other lamps remain functional. The combination of all of the factors, specific to this case, abate the risk to safety.''

DTNA concludes by again contending that the subject noncompliance is inconsequential as it relates to motor vehicle safety and asking that its petition to be exempted from providing notification of the noncompliance, as required by 49 U.S.C. 30118, and a remedy for the noncompliance, as required by 49 U.S.C. 30120, be granted.

DTNA's complete petition and all supporting documents are available by logging onto the Federal Docket Management System (FDMS) website at: *https://www.regulations.gov* and following the online search instructions to locate the docket number listed in the title of this notice.

VI. NHTSA's Analysis

NHTSA has evaluated the merits of DTNA's petition for inconsequential noncompliance and has decided that it should be denied.

The purpose of FMVSS No. 108 is to reduce traffic accidents, and deaths and injuries resulting from traffic accidents, by providing adequate illumination of the roadway and by enhancing the conspicuity of motor vehicles on the public roads so that their presence is perceived and their signals understood, both in daylight and darkness or other conditions of reduced visibility.

The noncompliance at issue here is that the stop lamps in the subject vehicles illuminate during a traction control event. Specifically, during a traction control event, the stop lamps are being activated by DTNA's ATC, which is not designed to retard the motion of the vehicle. This is a clear noncompliance with paragraphs S6.2.1 and S7.3.5, Table I-a of FMVSS No. 108. These paragraphs state that no additional lamp, reflective device, or other motor vehicle equipment is permitted to be installed that impairs the effectiveness of lighting equipment and that the stop lamps must be activated upon application of the service brake. The requirements also permit that the stop lamp may be activated by a device designed to retard the motion of the vehicle.

DTNA acknowledges that, in response to a request for interpretation from GM, the Agency stated that ''activation of the stop lamps for a purpose other than to indicate stopping or slowing will create confusion for the driver following as to the meaning of the signal, with the potential of causing that driver to apply the brakes in his or her vehicle inappropriately.'' [1] NHTSA continues to adhere to the position that inappropriate and misleading activation of stop lamps is consequential to safety. As defined by S4 of FMVSS No. 108, stop lamps are lamps giving a steady light to the rear of a vehicle to indicate a vehicle is stopping or diminishing speed by braking. In contrast, a traction control event typically involves a vehicle that is trying to gain traction to accelerate or maintain its existing speed. The illumination of stop lamps during a traction control event would therefore impair the effectiveness of the stop lamps and create a potential safety risk by incorrectly signaling to a following driver that there is an intent to slow down.

DTNA cites a petition from GM that the Agency granted, relating to the temporary illumination of the center high mounted stop lamp (CHMSL).[2] The Agency has reviewed this prior decision and finds that it does not support a finding of inconsequential noncompliance in this case. The noncompliance at issue in that petition involved a brief illumination of the CHMSL upon activation of the hazard warning signal, which, the Agency concluded, did ''not provide a conflicting message'' and ''would not confuse the intended general message.'' *See General Motors Corp.,* 66 FR 32872. As previously explained, the illumination of a vehicle's stop lamps in a traction control event sends a contradictory message.

Although the referenced GM decision issued by NHTSA stated that it was limited to the specific facts presented, DTNA also cites another petition submitted by GM that the Agency granted regarding the failure of the subject vehicles to meet the parking lamp requirements of paragraph S7.8.5 of FMVSS No. 108.[3] The Agency has reviewed this prior decision as well and finds that it does not support a finding of inconsequential noncompliance in this case. The noncompliance at issue in that petition involved a situation in which the front parking lamps could be turned off under the following circumstances:

a. Operated during the daytime with the master lighting switch in ''AUTO'' mode.

b. The transmission is not in ''Park.''

[1] Letter from F. Seales, Jr., NHTSA, to C. Terry, GM (May 26, 2000), *https://isearch.nhtsa.gov/files/21281.ztv.html.*

[2] 66 FR 32871, June 18, 2001.

[3] 83 FR 7847, February 02, 2018.

c. Three or more high-inrush current spikes that exceed the body control module (BCM) inrush current threshold occur on the parking lamp/daytime running lamp (DRL) circuit within a period of 0.625 seconds.

Under certain daytime conditions, a driver rapidly moving the headlamp switch between the ''AUTO'' and ''Park'' positions could generate these spikes that would turn the park lamps off. Although potentially contradictory and misleading lighting signals resulted from this noncompliance, NHTSA granted the petition because, among other things, the noncompliance would occur only in daytime when parking lamps are generally not in use, a fairly high degree of unusual user intervention was required, and the condition would correct itself during normal vehicle operation. *See General Motors, LLC,* 83 FR 7848. In contrast, the traction control event and the misleading activation of brake lights in the petition NHTSA is analyzing requires no unusual user intervention, can occur under normal driving conditions, and poses a risk both day and night.

Illumination of the stop lamps during a traction control event is an impairment of the stop lamp function. The safety risk occurs when the stop lamps are activated and other road users expect that the motion of the vehicle is being retarded, but the vehicle is not slowing, thereby potentially confusing or misleading road users by the introduction of a nonstandard signal.

The burden of establishing the inconsequentiality of a failure to comply with a *performance requirement* in a standard—as opposed to a *labeling requirement*—is more substantial and difficult to meet. Accordingly, the Agency has not found many such noncompliances inconsequential.[4] Potential performance failures of safety-critical equipment, like seat belts or air bags, are rarely deemed inconsequential.

An important issue to consider in determining inconsequentiality based upon NHTSA's prior decisions on noncompliance issues was the safety risk to individuals who experience the type of event against which the recall would otherwise protect.[5] In general, NHTSA also does not consider the absence of complaints or injuries to show that the issue is inconsequential to safety. ''Most importantly, the absence of a complaint does not mean there have not been any safety issues, nor does it mean that there will not be safety issues in the future.''[6] ''[T]he fact that in past reported cases good luck and swift reaction have prevented many serious injuries does not mean that good luck will continue to work.''[7]

Arguments that only a small number of vehicles or items of motor vehicle equipment are affected have also not justified granting an inconsequentiality petition.[8] Similarly, NHTSA has rejected petitions based on the assertion that only a small percentage of vehicles or items of equipment are likely to actually exhibit a noncompliance. The percentage of potential occupants that could be adversely affected by a noncompliance does not determine the question of inconsequentiality. Rather, the issue to consider is the consequence to an occupant who is exposed to the consequence of that noncompliance.[9] These considerations are also relevant when considering whether a defect is inconsequential to motor vehicle safety.

VII. NHTSA's Decision

In consideration of the foregoing, NHTSA has decided that DTNA has not met its burden of persuasion that the subject FMVSS No. 108 noncompliance is inconsequential to motor vehicle safety. Accordingly, DTNA's petition is hereby denied and DTNA is consequently obligated to provide notification of and free remedy for that noncompliance under 49 U.S.C. 30118 and 30120.

(Authority: 49 U.S.C. 30118, 30120: delegations of authority at 49 CFR 1.95 and 501.8)

Jeffrey Mark Giuseppe,

Associate Administrator for Enforcement.

[FR Doc. 2020–23672 Filed 10–23–20; 8:45 am]

BILLING CODE 4910–59–P

[4] *Cf. Gen. Motors Corporation; Ruling on Petition for Determination of Inconsequential Noncompliance,* 69 FR 19897, 19899 (Apr. 14, 2004) (citing prior cases where noncompliance was expected to be imperceptible, or nearly so, to vehicle occupants or approaching drivers).

[5] *See Gen. Motors, LLC; Grant of Petition for Decision of Inconsequential Noncompliance,* 78 FR 35355 (June 12, 2013) (finding noncompliance had no effect on occupant safety because it had no effect on the proper operation of the occupant classification system and the correct deployment of an air bag); *Osram Sylvania Prods. Inc.; Grant of Petition for Decision of Inconsequential Noncompliance,* 78 FR 46000 (July 30, 2013) (finding occupant using noncompliant light source would not be exposed to significantly greater risk than occupant using similar compliant light source).

[6] *Morgan 3 Wheeler Limited; Denial of Petition for Decision of Inconsequential Noncompliance,* 81 FR 21663, 21666 (Apr. 12, 2016).

[7] *United States* v. *Gen. Motors Corp.,* 565 F.2d 754, 759 (D.C. Cir. 1977) (finding defect poses an unreasonable risk when it ''results in hazards as potentially dangerous as sudden engine fire, and where there is no dispute that at least some such hazards, in this case fires, can definitely be expected to occur in the future'').

[8] *See Mercedes-Benz, U.S.A., L.L.C.; Denial of Application for Decision of Inconsequential Noncompliance,* 66 FR 38342 (July 23, 2001) (rejecting argument that noncompliance was inconsequential because of the small number of vehicles affected); *Aston Martin Lagonda Ltd.; Denial of Petition for Decision of Inconsequential Noncompliance,* 81 FR 41370 (June 24, 2016) (noting that situations involving individuals trapped in motor vehicles—while infrequent—are consequential to safety); *Morgan 3 Wheeler Ltd.; Denial of Petition for Decision of Inconsequential Noncompliance,* 81 FR 21663, 21664 (Apr. 12, 2016) (rejecting argument that petition should be granted because the vehicle was produced in very low numbers and likely to be operated on a limited basis).

[9] *See Gen. Motors Corp.; Ruling on Petition for Determination of Inconsequential Noncompliance,* 69 FR 19897, 19900 (Apr. 14, 2004); *Cosco Inc.; Denial of Application for Decision of Inconsequential Noncompliance,* 64 FR 29408, 29409 (June 1, 1999).

DEPARTMENT OF VETERANS AFFAIRS

Privacy Act of 1974: Matching Program

AGENCY: Department of Veterans Affairs.

ACTION: Notice of a New Computer Matching Program.

SUMMARY: Notice is hereby given that the Department of Veterans Affairs (VA) intends to conduct a recurring computer matching program. This will match personnel records of the Department of Defense (DoD) with VA records of benefit recipients under the Montgomery GI Bill—Active Duty, Montgomery GI Bill—Selected Reserve, and the Post-9/11 GI Bill. The goal of these matches is to identify the eligibility status of Veterans, servicemembers, and reservists who have applied for or who are receiving education benefit payments under the Montgomery GI Bill—Active Duty, Montgomery GI Bill—Selected Reserve, and the Post-9/11 GI Bill. The purpose of the match is to enable VA to verify that individuals meet the conditions of military service and eligibility criteria for payment of benefits determined by VA under the Montgomery GI Bill—Active Duty, Montgomery GI Bill—Selected Reserve, and Post-9/11 GI Bill.

DATES: Comments on this match must be received no later than 30 days after date of publication in the **Federal Register**. If no public comment is received during the period allowed for comment or unless otherwise published in the **Federal Register** by VA, the new agreement will become effective a minimum of 30 days after date of publication in the **Federal Register**. If VA receives public comments, VA shall review the comments to determine whether any changes to the notice are necessary. This matching program will be valid for 18 months from the effective date of this notice.

ADDRESSES: Comments may be submitted through *www.Regulations.gov* or mailed to VA Privacy Service, 810 Vermont Avenue NW, (005R1A), Washington, DC 20420. Comments should indicate that they are submitted in response to CMA VBA/DoD MGIB and Post 9/11 and SORN 58VA21/22/28. Comments received will be available at regulations.gov for public viewing, inspection or copies.

FOR FURTHER INFORMATION CONTACT: Eric Patterson, Legislative Strategy, Development and Implementation Chief, Education Service, Veterans Benefits Administration, Department of Veterans Affairs, 810 Vermont Avenue NW, Washington, DC 20420, (202) 461–9830.

SUPPLEMENTARY INFORMATION: The authority to conduct this match is found in 38 U.S.C. 3684A(a)(1). The records covered include eligibility records extracted from DoD personnel files and benefit records that VA establishes for all individuals who have applied for and/or are receiving, or have received education benefit payments under the Montgomery GI Bill—Active Duty, Montgomery GI Bill—Selected Reserve, and the Post-9/11 GI Bill. These benefit records are contained in a VA system of records identified as 58VA21/22/28 entitled: Compensation, Pension, Education, and Vocational Rehabilitation and Employment Records—VA, first published in the **Federal Register** at 41 FR 9294 (March 3, 1976), and last amended at 84 FR 4138 (Feb. 14, 2019), with other amendments as cited therein.

This information is required by paragraph 6c of the ''Guidelines on the Conduct of Matching Programs'' issued by OMB (54 FR 25818), interpreting the provisions of the Privacy Act pertaining to computer matching, as well as those computer matching portions of a revision of OMB Circular No. A–108, Federal Responsibilities for Review, Reporting, and Publication under the Privacy Act (December 23, 2016). The current matching agreement with the Department of Defense (DoD) expires November 25, 2020. The legal authority to conduct this match is 38 U.S.C. 5106, which requires any Federal department or agency to provide VA such information as VA requests for the purposes of determining eligibility for benefits or verifying other information with respect to payment of benefits. A copy of the notice has been provided to both Houses of Congress and OMB. The matching program is subject to their review.

Participating Agencies

This computer match is between the Department of Veterans Affairs (VA) and the Department of Defense (DoD).

Authority for Conducting the Matching Program

The authority to conduct this match is the Privacy Act, 5 U.S.C. 552a, 38 U.S.C. 5106, and 38 U.S.C. 3684A(a)(1).

Purpose(s)

This agreement establishes the conditions under which the Department of Defense (DoD) agrees to disclose information regarding eligibility to education benefits under the Montgomery GI Bill, Montgomery GI Bill—Selected Reserve and the Post-9/11 GI Bill to the Department of Veterans Affairs (VA). The purpose of this computer matching program between VA and DoD is to verify that individuals meet the conditions of military service and eligibility criteria for payment of benefits determined by VA under three enacted programs.

Categories of Individuals

Veterans, Servicemembers, Reservists and Dependents.

Categories of Records

Department of Defense (DoD), as the source agency, will provide to VA the eligibility records on DoD individuals consisting of data elements which contains specific data relating to the requirements for eligibility including data on member contribution amounts, service periods, and transfer of entitlement. VA will match on attributes, including Social Security Number (SSN), DoD Electronic Data Interchange Personal Identifier (EDIPI—or VA_ID), Date-of-Birth, Last Name, and File Identification Number.

System(s) of Records

These benefit records are contained in a VA system of records identified as 58VA21/22/28 entitled: Compensation, Pension, Education, and Vocational Rehabilitation and Employment Records—VA, first published in the **Federal Register** at 41 FR 9294 (March 3, 1976), and last amended at 84 FR 4138 (Feb. 14, 2019) and DoD updated their Defense Enrollment Eligibility Reporting Systems (DEERS) in the **Federal Register** at 84 FR 55293 on October 16, 2019 and corrected at 84 FR 65975 on December 2, 2019) with other amendments as cited therein.

Signing Authority

The Senior Agency Official for Privacy, or designee, approved this document and authorized the undersigned to sign and submit the document to the Office of the Federal Register for publication electronically as an official document of the Department of Veterans Affairs. Joseph S. Stenaka, Executive Director for Information Security Operations and Chief Privacy Officer, approved this document on October 2, 2020 for publication.

Dated: October 21, 2020.

Amy L. Rose,

Program Analyst, VA Privacy Service, Office of Information Security, Office of Information and Technology, Department of Veterans Affairs.

[FR Doc. 2020–23665 Filed 10–23–20; 8:45 am]

BILLING CODE P

FEDERAL REGISTER

Vol. 85 Monday,

No. 207 October 26, 2020

Part II

Environmental Protection Agency

40 CFR Part 139

Vessel Incidental Discharge National Standards of Performance; Proposed Rule

ENVIRONMENTAL PROTECTION AGENCY

40 CFR Part 139

[EPA–HQ–OW–2019–0482; FRL–10015–54–OW]

RIN 2040–AF92

Vessel Incidental Discharge National Standards of Performance

AGENCY: Environmental Protection Agency (EPA).

ACTION: Proposed rule.

SUMMARY: The U.S. Environmental Protection Agency (EPA) is publishing for public comment a proposed rule under the Vessel Incidental Discharge Act that would establish national standards of performance for marine pollution control devices for discharges incidental to the normal operation of primarily non-military and non-recreational vessels 79 feet in length and above into the waters of the United States or the waters of the contiguous zone. The proposed national standards of performance were developed in coordination with the U.S. Coast Guard (USCG) and in consultation with interested Governors. The proposed standards, once finalized and implemented through corresponding USCG regulations addressing implementation, compliance, and enforcement, would reduce the discharge of pollutants from vessels and streamline the current patchwork of federal, state, and local vessel discharge requirements. Additionally, EPA is proposing procedures for states to follow if they choose to petition EPA to issue an emergency order, to review any standard of performance, regulation, or policy, to request additional requirements with respect to discharges in the Great Lakes, or to apply to EPA to prohibit one or more types of vessel discharges proposed for regulation in this rulemaking into specified waters to provide greater environmental protection.

DATES: Comments must be received on or before November 25, 2020. Under the Paperwork Reduction Act (PRA), comments on the information collection provisions are best assured of consideration if the Office of Management and Budget (OMB) receives a copy of your comments on or before November 25, 2020.

ADDRESSES: Submit your comments to the public docket for this proposed rule, identified by Docket No. EPA–HQ–OW–2019–0482, at *https://www.regulations.gov*. Follow the online instructions for submitting comments. All submissions received must include the Docket ID No. for this rulemaking. Comments received may be posted without change to *https://www.regulations.gov*, including any personal information provided. For detailed instructions on sending comments and additional information on the rulemaking process, see the ''General Information'' heading of the **SUPPLEMENTARY INFORMATION** section of this document. Out of an abundance of caution for members of the public and our staff, the EPA Docket Center and Reading Room are closed to the public, with limited exceptions, to reduce the risk of transmitting COVID–19. Our Docket Center staff will continue to provide remote customer service via email, phone, and webform. We encourage the public to submit comments via *https://www.regulations.gov* or email, as there may be a delay in processing mail and faxes. Hand deliveries and couriers may be received by scheduled appointment only. For further information on EPA Docket Center services and the current status, please visit us online at *https://www.epa.gov/dockets*.

FOR FURTHER INFORMATION CONTACT: Jack Faulk at (202) 564–0768; *faulk.jack@epa.gov* or Katherine Weiler at (202) 566–1280; *weiler.katherine@epa.gov* of the Oceans and Coastal Management Branch (4504T), U.S. Environmental Protection Agency, 1200 Pennsylvania Avenue NW, Washington, DC 20460.

SUPPLEMENTARY INFORMATION: This supplementary information is organized as follows:

I. Public Participation
A. How should I submit written comments?
II. Legal Authority
III. Executive Summary
IV. Background
A. Clean Water Act
B. Additional U.S. and International Authorities
C. Environmental Impacts of Discharges for Which Technology-Based Standards Would Be Established by This Rule
V. Scope of the Regulatory Action
A. Waters
B. Vessels
C. Incidental Discharges
D. Emergency and Safety Concerns
E. Effective Date
VI. Stakeholder Engagement
A. Informational Webinars and Public Listening Session
B. Post-Proposal Public Meetings
C. Consultation and Coordination With States
VII. Definitions
VIII. Development of National Discharge Standards of Performance
A. Discharges Incidental to the Normal Operation of a Vessel—General Standards
1. General Operation and Maintenance
2. Biofouling Management
3. Oil Management
4. Training and Education
B. Discharges Incidental to the Normal Operation of a Vessel—Specific Standards
1. Ballast Tanks
2. Bilges
3. Boilers
4. Cathodic Protection
5. Chain Lockers
6. Decks
7. Desalination and Purification Systems
8. Elevator Pits
9. Exhaust Gas Emission Control Systems
10. Fire Protection Equipment
11. Gas Turbines
12. Graywater Systems
13. Hulls and Associated Niche Areas
14. Inert Gas Systems
15. Motor Gasoline and Compensating Systems
16. Non-Oily Machinery
17. Pools and Spas
18. Refrigeration and Air Conditioning
19. Seawater Piping
20. Sonar Domes
C. Discharges Incidental to the Normal Operation of a Vessel—Federally-Protected Waters Requirements
D. Discharges Incidental to the Normal Operation of a Vessel—Previous VGP Discharges No Longer Requiring Control
IX. Procedures for States To Request Changes to Standards, Regulations, or Policy Promulgated by the Administrator
A. Petition by a Governor for the Administrator To Establish an Emergency Order or Review a Standard, Regulation, or Policy
B. Petition by a Governor for the Administrator To Establish Enhanced Great Lakes System Requirements
C. Application by a State for the Administrator To Establish a State No-Discharge Zone
X. Implementation, Compliance, and Enforcement
XI. Regulatory Impact Analysis
XII. Statutory and Executive Order Reviews
A. Executive Order 12866: Regulatory Planning and Review and Executive Order 13563: Improving Regulation and Regulatory Review
B. Executive Order 13771: Reducing Regulation and Controlling Regulatory Costs
C. Paperwork Reduction Act
D. Regulatory Flexibility Act
E. Unfunded Mandates Reform Act
F. Executive Order 13132: Federalism
G. Executive Order 13175: Consultation and Coordination With Indian Tribal Governments
H. Executive Order 13045: Protection of Children From Environmental Health and Safety Risks
I. Executive Order 13211: Actions Concerning Regulations That Significantly Affect Energy Supply, Distribution, or Use
J. National Technology Transfer and Advancement Act
K. Executive Order 12898: Federal Actions To Address Environmental Justice in

Minority Populations and Low-Income Populations
XIII. References

I. Public Participation

A. How should I submit written comments?

EPA solicits comment on the proposed rule during the public comment period. Submit your comments, identified by Docket ID No. EPA–HQ–OW–2019–0482, at *https://www.regulations.gov*. Once submitted, comments cannot be edited or removed from the docket. EPA may publish any comment received to its public docket. Do not submit to EPA's docket at *https://www.regulations.gov* any information you consider to be Confidential Business Information (CBI) or other information whose disclosure is restricted by statute. Multimedia submissions (audio, video, etc.) must be accompanied by a written comment. The written comment is considered the official comment and should include discussion of all points you wish to make. To facilitate the processing of comments, commenters are encouraged to organize their comments in a manner that corresponds to the outline of this proposal; clearly explain why they agree or disagree with the proposed language; suggest alternative language; and include any technical or economic data to support their comment. For comments to be considered during the development of the final rule, comments must be received before the end of the comment period.

EPA will generally not consider comments or comment contents located outside of the primary submission (*i.e.,* on the web, cloud, or other file sharing system). For additional submission methods, the full EPA public comment policy, information about CBI or multimedia submissions, and general guidance on making effective comments, please visit *https://www.epa.gov/dockets/commenting-epa-dockets*.

EPA is temporarily suspending its Docket Center and Reading Room for public visitors, with limited exceptions, to reduce the risk of transmitting COVID–19. Our Docket Center staff will continue to provide remote customer service via email, phone, and webform. We encourage the public to submit comments via *https://www.regulations.gov* as there may be a delay in processing mail and faxes. Hand deliveries or couriers will be received by scheduled appointment only. For further information and updates on EPA Docket Center services, please visit us online at *https://www.epa.gov/dockets*.

EPA continues to carefully and continuously monitor information from the Centers for Disease Control and Prevention (CDC), local area health departments, and our Federal partners so that we can respond rapidly as conditions change regarding COVID–19.

II. Legal Authority

EPA proposes this rule under the authority of Clean Water Act Sections 301, 304, 307, 308, 312, and 501 as amended by the Vessel Incidental Discharge Act. 33 U.S.C. 1311, 1314, 1317, 1322, and 1361.

III. Executive Summary

Discharges incidental to the normal operation of a vessel, also referred to as ''incidental discharges'' or ''discharges'' in this rulemaking, can have adverse impacts on aquatic ecosystems and other potential impacts such as to human health through contamination of food from aquaculture/shellfish harvesting areas because the discharges may contain pollutants such as aquatic nuisance species (ANS), nutrients, bacteria or pathogens (*e.g., Escherichia coli* and fecal coliform), oil and grease, metals, as well as other toxic, nonconventional, and conventional pollutants (*e.g.,* organic matter, bicarbonate, and suspended solids). These pollutants can have wide-ranging environmental consequences that vary in degree depending on the type and number of vessels operating in a waterbody and the nature and extent of the discharge.

The Clean Water Act (CWA), the Nonindigenous Aquatic Nuisance Prevention and Control Act (NANPCA), the Act to Prevent Pollution from Ships (APPS), and several other federal, state, local, and international authorities have established over time various requirements for both domestic and international vessels. To clarify and streamline existing requirements, in December of 2018, the President signed into law the Vessel Incidental Discharge Act (VIDA). 33 U.S.C. 1322(p). The VIDA established a new CWA Section 312(p) titled ''Uniform National Standards for Discharges Incidental to Normal Operation of Vessels.'' The VIDA consolidates and restructures the existing regulatory framework for non-military (vessels of the Armed Forces) and non-recreational vessels; clarifies current and future regulatory coverage for different types of vessels; and, requires EPA and the USCG to establish national standards of performance for marine pollution control devices and corresponding implementing regulations, respectively, to prevent or reduce the discharge of pollutants from vessels.

More specifically, the new CWA Section 312(p) directs the Administrator of EPA (Administrator) to develop national standards of performance in consultation with interested Governors and with the concurrence of the Secretary of the department in which the USCG is operating (Secretary) by December 2020. With limited exceptions, the VIDA requires that the standards be at least as stringent as EPA's 2013 National Pollutant Discharge Elimination System (NPDES) Vessel General Permit (VGP) requirements established under CWA Section 402. *See* 33 U.S.C. 1322(p)(4)(B)(iii) (EPA standards); *id.* (5)(A)(ii) (USCG requirements). The VIDA also requires that the standards be technology-based using a similar approach to that outlined by the CWA for setting, among other things, effluent limitation guidelines. Additionally, the VIDA requires the USCG to develop corresponding implementation, compliance, and enforcement regulations within two years after EPA publishes the national standards of performance. The USCG implementing regulations may also include requirements governing the design, construction, testing, approval, installation, and use of devices to achieve EPA national standards of performance. Importantly, requirements of EPA's VGP and the USCG's requirements under Section 110 of NANPCA remain in place until these new EPA and USCG regulations under CWA Section 312(p) are final, effective, and enforceable. In addition, the VIDA repealed the 2014 EPA NPDES Small Vessel General Permit (sVGP) and established that neither EPA nor the states shall require an NPDES permit for any discharge incidental to the normal operation of a vessel, other than ballast water, from a small vessel or fishing vessel, effective immediately upon enactment of the VIDA.

The proposed rule would establish both general and specific discharge standards of performance for approximately 82,000 international and domestic non-military, non-recreational vessels operating in the waters of the United States or the waters of the contiguous zone. The types of vessels intended to be covered under the proposed rule include, but are not limited to, public vessels of the United States, fishing vessels (for ballast water only), passenger vessels such as cruise ships and ferries, barges, tugs and tows, offshore supply vessels, mobile offshore drilling units, tankers, bulk carriers, cargo ships, container ships, and

research vessels. While most provisions are intended to apply to a wide range of vessels, the VIDA specified that fishing vessels would only be subject to ballast water provisions. 33 U.S.C. 1322(p)(2)(B)(i)(III).

The general discharge standards of performance are designed to apply to all vessels and incidental discharges covered by the rule, as appropriate, and are organized into three categories: (1) General Operation and Maintenance, (2) Biofouling Management, and (3) Oil Management. The general discharge standards of performance are preventative in nature and require best management practices (BMPs) to minimize the introduction of pollutants into the discharges, as well as the volume of discharges.

The specific discharge standards of performance would establish requirements for 20 separate discharges incidental to the normal operation of a vessel from the following pieces of equipment and systems: Ballast tanks, bilges, boilers, cathodic protection, chain lockers, decks, desalination and purification systems, elevator pits, exhaust gas emission control systems, fire protection equipment, gas turbines, graywater systems, hulls and associated niche areas, inert gas systems, motor gasoline and compensating systems, non-oily machinery, pools and spas, refrigeration and air conditioning, seawater piping, and sonar domes. These discharge-specific requirements are based on best available technology economically achievable, best conventional pollutant control technology, and best practicable technology currently available, including the use of BMPs, to prevent or reduce the discharge of pollutants into the waters of the United States or the waters of the contiguous zone.

Pursuant to the VIDA, the proposed discharge standards of performance are proposed to be at least as stringent as the VGP, with some exceptions discussed below. However, the proposed standards do not incorporate the VGP requirements verbatim. EPA is proposing changes to the VGP requirements to transition the permit requirements into national technology-based standards of performance, improve clarity, enhance enforceability and implementation, or incorporate new information and technology. In some cases, this resulted in EPA consolidating or renaming the VGP requirements to comport with the VIDA. As proposed, the similarities and differences between the requirements in the proposed discharge standards of performance and the requirements in the VGP can be sorted into three distinct groups. The first group consists of 13 proposed discharge standards that are substantially the same as the requirements of the VGP: Boilers, cathodic protection, chain lockers, decks, elevator pits, fire protection equipment, gas turbines, inert gas systems, motor gasoline and compensating systems, non-oily machinery, pools and spas, refrigeration and air conditioning, and sonar domes. These 13 proposed discharge standards encompass the intent and stringency of the VGP but include other changes in response to the VIDA (*e.g.,* extent of regulated waters, consistency across discharge standards, enforceability and legal precision, as well as minor clarifications). The second group consists of two proposed discharge standards that are consistent but slightly modified from the VGP to expand controls or provide greater language clarifications: Bilges and desalination and purification systems. The third group consists of five proposed discharge standards which contain the greatest modifications from the VGP: Ballast tanks, exhaust gas emission control systems, graywater, hulls and associated niche areas, and seawater piping. In addition, EPA is proposing to modify slightly the requirements as they apply in federally-protected waters for five discharges: Chain lockers, decks, hulls and associated niche areas, pools and spas, and seawater piping. These modifications are being proposed to address specific VIDA requirements as well as incorporate new information that has become available since the issuance of the VGP.

CWA Section 312(p) also directs EPA to establish additional discharge requirements for vessels operating in certain bodies of water, to include: The ''Great Lakes,'' the ''Pacific Region,'' and waters subject to Federal protection, in whole or in part, for conservation purposes (''federally-protected waters''). The proposed rule would establish place-based requirements to further prevent or reduce the discharge of pollutants into these waterbodies that may contain unique ecosystems, support distinctive species of aquatic flora and fauna, contend with more sensitive water quality issues, or otherwise require greater protection.

Finally, as required under CWA Section 312(p), EPA is proposing specific procedural requirements for states seeking to petition EPA to establish different discharge standards, issue emergency orders, or establish no-discharge zones.

This proposed rule, once finalized, will fulfill EPA's requirements under CWA Section 312(p) to establish technology-based national standards of performance for discharges incidental to the normal operation of primarily non-military, non-recreational vessels 79 feet in length and above. EPA solicits public comments on this proposal and the associated regulatory impact analysis, which can be found in the rulemaking docket.

IV. Background

A. Clean Water Act

EPA's regulatory regime under the CWA to address vessel discharges has changed over the years due to EPA regulations, court decisions, and new legislation. The first sentence of the Federal Water Pollution Control Act Amendments of 1972, commonly known as the CWA,[1] states, ''[t]he objective of [the Act] is to restore and maintain the chemical, physical, and biological integrity of the Nation's waters.'' 33 U.S.C. 1251(a). Section 301(a) of the CWA provides that ''the discharge of any pollutant by any person shall be unlawful'' unless the discharge is in compliance with certain other sections of the Act. 33 U.S.C. 1311(a). Among its provisions, the CWA authorizes EPA and other federal agencies to address the discharge of pollutants from vessels. As such, EPA established regulations to address vessel discharges authorized under CWA Section 311 (addressing oil), Section 312 (addressing sewage and discharges incidental to the normal operation of a vessel of the Armed Forces), and Section 402 (pursuant to which EPA established the NPDES VGP).

From 1972 to 2005, EPA vessel regulations were primarily limited to addressing the discharge of oil and sewage under CWA Sections 311 and 312, respectively. In December of 2003, a long-standing exclusion of discharges incidental to the normal operation of vessels from the CWA Section 402 NPDES permitting program became the subject of a lawsuit in the U.S. District Court for the Northern District of California (*Nw. Envtl. Advocates* v. *U.S. Envtl. Prot. Agency,* No. C–03–05760–SI, 2005 WL 756614). The lawsuit arose from EPA's September 2003 denial of a January 1999 rulemaking petition submitted to EPA by parties concerned about the effects of ballast water discharges. Prior to the lawsuit, EPA, through a 1973 regulation, had excluded discharges incidental to the normal

[1] The FWPCA is commonly referred to as the CWA following the 1977 amendments to the FWPCA. Public Law 95–217, 91 Stat. 1566 (1977). For ease of reference, the agencies will generally refer to the FWPCA in this notice as the CWA or the Act.

operation of vessels from the CWA Section 402 permitting program. See 38 FR 13528, May 22, 1973. The petition asked the Agency to repeal its regulation at 40 CFR 122.3(a) that excludes certain discharges incidental to the normal operation of vessels from the requirement to obtain an NPDES permit. The petition asserted that vessels are ''point sources'' requiring NPDES permits for discharges to U.S. waters; that EPA lacks authority to exclude point source discharges from vessels from the NPDES program; that ballast water must be regulated under the NPDES program because it contains invasive plant and animal species as well as other materials of concern (*e.g.,* oil, chipped paint, sediment, and toxins in ballast water sediment); and that enactment of CWA Section 312(n) (Uniform National Discharge Standards, also known as the UNDS program) in 1996 demonstrated Congress' rejection of the exclusion.

In March 2005, the court determined the exclusion exceeded the Agency's authority under the CWA and subsequently in 2006 declared that ''[t]he blanket exemption for discharges incidental to the normal operation of a vessel, contained in 40 CFR 122.3(a), shall be vacated as of September 30, 2008.'' *Nw. Envtl. Advocates* v. *U.S. Envtl. Prot. Agency,* C 03–05760 SI, 2006 WL 2669042, at *15 (N.D. Cal. Sept. 18, 2006), *aff'd* 537 F.3d 1006 (9th Cir. 2008). Shortly thereafter, Congress enacted two pieces of legislation to exempt discharges incidental to the normal operation of certain types of vessels from the need to obtain a permit. The first of these, entitled the Clean Boating Act of 2008 (Pub. L. 110–288, July 28, 2008), amended the CWA to provide that discharges incidental to the normal operation of recreational vessels are not subject to NPDES permitting, and created a new regulatory regime to be implemented by EPA and the USCG under a new CWA Section 312(o). The second piece of legislation provided for a temporary moratorium on NPDES permitting for discharges, excluding ballast water, subject to the 40 CFR 122.3(a) exclusion from (1) commercial fishing vessels (as defined in 46 U.S.C. 2101 and regardless of size) and (2) those other non-recreational vessels less than 79 feet in length. S. 3298, Public Law 110–299 (July 31, 2008).

In response to the court decision and the legislation, EPA issued the first VGP in December 2008 for discharges incidental to the normal operation of non-recreational, non-military vessels 79 feet in length and above. See 73 FR 79473, December 29, 2008. Additionally, in September 2014, EPA issued the sVGP for discharges from non-recreational, non-military vessels less than 79 feet. See 79 FR 53702, September 10, 2014. Upon expiration of the 2008 permit, EPA issued the second VGP in 2013. See 78 FR 21938, April 12, 2013.

After the EPA issuance of the VGP under the CWA and the USCG promulgation of regulations under the NANPCA, the vessel community expressed concerns regarding the lack of uniformity, duplication, and confusion associated with the vessel regulatory regime. See Errata to S. Rep. No. 115–89 (2019) [hereinafter VIDA Senate Report], at 3–5 (discussing these and similar concerns), available at *https://www.congress.gov/115/crpt/srpt89/CRPT-115srpt89-ERRATA.pdf.* In response, members of Congress introduced various pieces of legislation to modify and clarify the regulation and management of ballast water and other incidental vessel discharges. In December 2018, President Trump signed into law the Frank LoBiondo Coast Guard Authorization Act of 2018, which included the VIDA. Public Law 115–282, tit. IX (2018) (codified primarily at 33 U.S.C. 1322(p)). The VIDA restructures the way EPA and the USCG regulate incidental vessel discharges from non-military, non-recreational vessels and amended CWA Section 312 to include a new Subsection (p) titled ''Uniform National Standards for Discharges Incidental to Normal Operation of Vessels.'' CWA Section 312(p), among other things, repeals EPA's 2014 sVGP effectively immediately and requires EPA and the USCG to develop new regulations to replace the existing EPA VGP and USCG vessel discharge requirements. The VIDA also specifies that, effectively immediately upon enactment of the VIDA, neither EPA nor NPDES-authorize states may require, or in any way modify, a permit under the NPDES program for any discharge incidental to the normal operation of a vessel from a small vessel (less than 79 feet in length) or fishing vessel (of any size).

Specifically, CWA Section 312(p)(4) directs the Administrator, with concurrence of the Secretary and in consultation with interested Governors, to promulgate national standards of performance for marine pollution control devices for each type of discharge incidental to the normal operation of non-recreational and non-military vessels.[2] CWA Section 312(p)(5) also directs the Secretary to develop corresponding implementing regulations to govern the implementation, compliance, and enforcement of the national standards of performance. Additionally, CWA Section 312(p) generally preempts states from establishing more stringent discharge standards once the USCG implementing regulations required under Section 312(p)(5)(A)–(C) are final, effective, and enforceable. However, the VIDA includes several exceptions to this expressed preemption (33 U.S.C. 1322(p)(9)(A)(ii)–(v); VIDA Senate Report at 15 (discussing these exceptions)), a savings clause (33 U.S.C. 1322(p)(9)(A)(vi)), and provisions for states working directly with EPA or the USCG to seek and obtain additional requirements, including the establishment of no-discharge zones for one or more incidental discharges (33 U.S.C. 1322(p)(10)(D)). Although not part of CWA Section 312(p), the VIDA also establishes several programs to address invasive species, including the establishment of the ''Great Lakes and Lake Champlain Invasive Species Program'' research and development program and the ''Coastal Aquatic Invasive Species Mitigation Grant Program.''

B. Additional U.S. and International Authorities

During the development of the proposed rule, EPA reviewed other U.S. laws and international authorities that address discharges incidental to the normal operation of a vessel. The requirements established under these authorities are currently being met and implemented and therefore are technologically and economically practicable and achievable. As appropriate, EPA considered these requirements while developing this proposed rule.

As expressly provided in the VIDA, this proposed rule would not affect the requirements for vessels established under any other provision of Federal law. 33 U.S.C. 1322(p)(9)(B). EPA provides a short summary of these U.S. authorities as well as some international authorities below.

[2] CWA Section 312(b) provides authority for EPA to establish federal standards of performance for sewage from vessels within the meaning of ''sewage'' as defined in section 312(a)(6). Thus, the discharge of sewage from vessels, is not included in this CWA section 312(p) rulemaking, except when commingled with other discharges incidental to the normal operation of a vessel, as authorized in CWA section 312(p)(2)(A)(ii). EPA and the USCG regulate sewage from vessels under CWA section 312(b) as codified in 40 CFR part 140 (marine sanitation device standard) and 33 CFR part 159 subparts A–D (requirements for the design, construction, certification, installation, and operation of marine sanitation devices).

International Convention for the Prevention of Pollution From Ships, the Act To Prevent Pollution From Ships, and Implementing Regulations

The International Convention for the Prevention of Pollution from Ships (MARPOL 73/78) is an international treaty that regulates certain discharges from vessels. MARPOL Annexes regulate different types of vessel pollution; the United States is a party to Annexes I, II, III, V, and VI. MARPOL is primarily implemented in the United States by APPS, 33 U.S.C. 1901 *et seq.* The USCG is the lead agency for APPS implementation and issued implementing regulations primarily found at 33 CFR part 151. Those requirements already apply to many of the vessels covered by the proposed rule.

APPS regulates the discharge of oil and oily mixtures, noxious liquid substances, and garbage, including food wastes and plastic. With respect to oil and oily mixtures, the USCG regulations at 33 CFR 151.10 prohibit ''any discharge of oil or oily mixtures into the sea from a ship'' except when certain conditions are met, including a discharge oil content of less than 15 parts per million (ppm) and that the ship operates oily water separating equipment, a bilge monitor, a bilge alarm, or a combination thereof.

Substances regulated as noxious liquid substances under APPS are divided into four categories based on their potential to harm marine resources and human health. Under 46 CFR 153.1128, discharges of noxious liquid substances residues at sea may only take place at least 12 nautical miles (NM) from the nearest land. Given this requirement, the proposed rule would also prohibit the discharge of noxious liquid substances within 12 NM from the nearest land.

MARPOL Annex III addresses harmful substances in packaged form and is implemented in the United States by the Hazardous Materials Transportation Authorization Act of 1994, as amended (49 U.S.C. 5901 *et seq.*), and regulations appearing at 46 CFR part 148 and 49 CFR part 176. The regulatory provisions establish labeling, packaging, and stowage requirements for such materials to help avoid their accidental loss or spillage during transport. The proposed rule does not regulate loss or spillage of transported materials; however, the proposed rule would establish BMPs to help reduce or prevent the loss of materials and debris overboard.

Oil Pollution Act (33 U.S.C. 2701 et seq.)

The Oil Pollution Act of 1990 and the associated USCG implementing regulations at 33 CFR parts 155 and 157 also address oil and oily mixture discharges from vessels. These regulations establish and reinforce the 15 ppm discharge standard under APPS for oil and oily mixtures for seagoing ships and require most vessels to have an oily water separator. Oceangoing vessels of less than 400 gross tonnage as measured under the Convention Measurement System of the International Convention on Tonnage Measurement of Ships (GT ITC) (400 gross register tonnage (GRT) if GT ITC is not assigned) must either have an approved oily water separator or retain oily water mixtures on board for disposal to an approved reception facility onshore. Oceangoing vessels of 400 GT ITC (400 GRT if GT ITC is not assigned) and above, but less than 10,000 GT ITC (10,000 GRT if GT ITC is not assigned), except vessels that carry ballast water in their fuel oil tanks, must be fitted with ''approved 15 parts per million (ppm) oily-water separating equipment for the processing of oily mixtures from bilges or fuel oil tank ballast.'' 33 CFR 155.360(a)(1). Oceangoing ships of 10,000 gross tonnage and above and oceangoing ships of 400 gross tonnage and above that carry ballast water in their fuel oil tanks, must be fitted with approved 15 ppm oily water separating equipment for the processing of oily mixtures from bilges or fuel oil tank ballast, a bilge alarm, and a means for automatically stopping any discharge of oily mixture when the oil content in the effluent exceeds 15 ppm. 33 CFR 155.370. 33 CFR part 155 also references oil containment and cleanup equipment and procedures for preventing and reacting to oil spills and discharges. The proposed rule references or incorporates the existing requirements for fuel and oil established under the Oil Pollution Act and APPS and prohibits the discharge of oil greater than 15 ppm.

Clean Water Act Section 311 (33 U.S.C. 1321)

CWA Section 311, Oil and Hazardous Substances Liability Act, states that it is a policy of the United States that there should be no discharges of oil or hazardous substances into the waters of the United States, adjoining shorelines, and certain specified areas, except where permitted under Federal regulations (*e.g.,* the NPDES program). As such, the Act prohibits the discharge of oil or hazardous substances into these areas in such quantities as may be harmful. Further, the Act states that the President shall, by regulation, determine those quantities of oil and any hazardous substances that may be harmful if discharged. EPA defines the discharge of oil in such quantities as may be harmful as those that violate applicable water quality standards or ''cause a film or sheen upon or discoloration of the surface of the water or adjoining shorelines or cause a sludge or emulsion to be deposited beneath the surface of the water or upon adjoin shorelines.'' 40 CFR 110.3. Sheen is clarified to mean ''an iridescent appearance on the surface of the water.'' 40 CFR 110.1. The proposed rule would prohibit the discharge of oil, including oily mixtures, in such quantities as may be harmful.

Federal Insecticide, Fungicide, and Rodenticide Act (7 U.S.C. 136 *et seq.*).

The Federal Insecticide, Fungicide, and Rodenticide Act (FIFRA) regulates the distribution, sale, and use of pesticides. One of the primary components of FIFRA requires the registration and labeling of all pesticides sold or distributed in the United States, ensuring that, if pesticides are used in accordance with the specifications on the label, they will not cause unreasonable adverse effects on humans or the environment. The proposed rule would reiterate from the VGP that any registered pesticide must be used in accordance with its FIFRA label for all activities that result in a discharge into the waters of the United States or the waters of the contiguous zone. The proposed rule does not negate the requirements under FIFRA and its implementing regulations to use registered pesticides consistent with the product's labeling. In fact, the discharge of pesticides used in violation of certain FIFRA requirements could also be a violation of these standards and therefore a violation of the CWA (*e.g.,* exceeding hull coating application rates).

National Marine Sanctuaries Act (16 U.S.C. 1431 *et seq.* and Implementing Regulations Found at 15 CFR Part 922 and 50 CFR Part 404)

The National Marine Sanctuaries Act (NMSA) authorizes the designation and management of National Marine Sanctuaries to protect marine resources with conservation, education, historical, scientific, and other special qualities. Under NMSA, additional restrictions and requirements may be imposed on vessel operators who boat in and around National Marine Sanctuaries. Consistent with the VGP, the proposed rule would

establish additional restrictions and requirements for certain discharges for vessels that operate in and around National Marine Sanctuaries as these areas are included in the definition of federally-protected waters in the proposed rule as designated in Appendix A of Part 139. Pursuant to CWA Sections 312(9)(B) and (E), discharge requirements established by regulations promulgated by the Secretary of Commerce under the National Marine Sanctuaries Act would continue to apply to waters under the control of the Secretary of Commerce (*e.g.,* National Marine Sanctuaries) in addition to the standards and requirements established in this proposed rule.

C. Environmental Impacts of Discharges for Which Technology-Based Discharge Standards Would Be Established by This Rule

Discharges incidental to the normal operation of vessels can have significant adverse impacts on aquatic ecosystems and other potential impacts such as to human health through contamination of food from aquaculture/shellfish harvesting areas through the addition of pollutants (*e.g.,* metals, nutrients, bacteria, viruses, ANS). The adverse environmental impacts vary considerably based on the type and number of vessels, the size and location of the port or marina, and the condition of the receiving waters. These adverse impacts are more likely to occur when there are significant numbers of vessels operating in receiving waters with limited circulation or if the receiving waters are already impaired. As a result of this variation, protecting U.S. waters from vessel-related activities poses unique challenges for local, state, and federal governments. Targeted reduction of certain discharges or constituents of concern can significantly benefit receiving waters.

The information below provides an overview of the environmental impacts associated with the pollutants addressed in this proposed rule: ANS, nutrients, pathogens (including *Escherichia coli* and fecal coliform), oil and grease, metals, toxic and nonconventional pollutants with toxic effects, and other nonconventional and conventional pollutants.

Aquatic Nuisance Species (ANS)

ANS are a persistent problem in U.S. coastal and inland waters. ANS can include invasive plants, animals, and pathogens. The VIDA specifically includes ANS in the category of nonconventional pollutants to be regulated through the application of best available technology and best practicable technology. 33 U.S.C. 1322(p)(4)(B)(i).

ANS may be incidentally discharged or released from a vessel's operations through a variety of vessel systems and equipment, including but not limited to ballast water, sediment from ballast tanks, vessel hulls and appendages, seawater piping, chain lockers, and anchor chains. ANS pose severe threats to aquatic ecosystems, including outcompeting native species, damaging habitat, changing food webs, and altering the chemical and physical aquatic environment. Furthermore, ANS can have profound and wide-ranging socioeconomic impacts, such as damage to recreational and commercial fisheries, infrastructure, and water-based recreation and tourism. Once established, it is extremely challenging and costly to remove ANS and remediate the impacts. It has become even more critical to control discharges of ANS from vessel systems and equipment with the increase in ship traffic due to globalization and increased trade.

Nutrients

Nutrients, including nitrogen, phosphorus, and other micro-nutrients, are constituents of incidental discharges from vessels. Though often associated with discharges from sewage treatment facilities and other sources such as runoff from agricultural and urban stormwater sources, nutrients are also discharged from vessel sources such as runoff from deck cleaning, graywater, and bilgewater.

Increased nutrient discharges from anthropogenic sources are a major source of water quality degradation throughout the United States (U.S. Geological Survey, 1999). Generally, nutrient over-enrichment of waterbodies adversely impacts biological diversity, fisheries, and coral reef and seagrass ecosystems (National Research Council, 2000). One of the most notable effects of nutrient over-enrichment is the excess proliferation of plant life and ensuing eutrophication. A eutrophic system has reduced levels of dissolved oxygen, increased turbidity, and changes in the composition of aquatic flora and fauna. Such conditions also fuel harmful algal blooms, which can have significant adverse impacts on human health as well as aquatic life (National Research Council, 2000; Woods Hole Oceanographic Institute, 2007).

Pathogens

Pathogens are another constituent that can be found in discharges from vessels, particularly in graywater and ballast water discharges. Discharges of pathogens into waterbodies can adversely impact local ecosystems, fisheries, and human health. Pathogens found in untreated graywater are similar to, and in some cases may have a higher concentration than, domestic sewage entering land-based wastewater treatment plants (U.S. EPA, 2008). Specific pathogens of concern found in graywater include *Salmonella* spp., *Escherichia coli,* enteroviruses, hepatitis, and pathogenic protists (National Research Council, 1993). Additional pathogen discharges have also been associated with ballasting operations, including *Escherichia coli,* intestinal enterococci, *Vibrio cholerae, Clostridium perfringens, Salmonella* spp., *Cryptosporidium* spp., *Giardia* spp., and a variety of viruses (Knight et al., 1999; Reynolds et al., 1999; Zo et al., 1999). Pathogens can potentially even be transported in unfilled ballast water tanks (Johengen et al., 2005). Under the VIDA, bacterial and viral pathogens can qualify as ''aquatic nuisance species.'' 33 U.S.C. 1312(p)(1)(A), (Q), (R) (defining the related terms ''aquatic nuisance species,'' ''nonindigenous species,'' and ''organism'').

Oil and Grease

Vessels can discharge a variety of oils during normal operations, including lubricating oils, hydraulic oils, and vegetable or organic oils. A significant portion of the lubricants discharged from a vessel during these normal operations directly enters the marine environment. Some types of oil and grease can be highly toxic and carcinogenic, and have been shown to alter the immune system, reproductive abilities, and liver functions of many aquatic organisms (Ober, 2010). Broadly, the toxicity of oil and grease to aquatic life is due to reduced oxygen transport potential and an inability of organisms to metabolize and excrete them once ingested, absorbed, or inhaled.

The magnitude of impact of oils differs depending on the chemical composition, method of exposure, concentration, and environmental conditions (*e.g.,* weather, salinity, temperature). It can therefore be difficult to identify one single parameter responsible for negatively impacting aquatic life. However, studies have shown that compounds with hydrocarbon chains are consistently associated with harmful impacts. Hydrocarbon chains contain strong hydrogen bonds, which do not readily break down in water. Such oils can then accumulate in the tissues of aquatic organisms and cause toxic effects.

Aromatic hydrocarbon compounds, commonly present in fuels, lubricants, and additives, are consistently associated with acute toxicity and harmful effects in aquatic biota (Dupuis and Ucan-Marin, 2015*).* Impacts are observed in both developing and adult organisms, and include reduced growth, enlarged livers, fin erosion, reproduction impairment, and modifications to heartbeat and respiration rates (Dupuis and Ucan-Marin, 2015). Laboratory experiments have shown that fish embryos exposed to hydrocarbons exemplify symptoms collectively referred to as blue sac disease (BSD). Symptoms of BSD range from reduced growth and spinal abnormalities, to hemorrhages and mortality (Dupuis and Ucan-Marin, 2015). Oils can also taint organisms that are consumed by humans, resulting in economic impacts to fisheries and potential human health effects.

In establishing the VGP, EPA considered the research efforts focused on the development of environmentally acceptable lubricants (EALs). Production of EALs focuses on using chemicals with oxygen atoms, which, unlike hydrocarbons, makes them water soluble. The solubility of EALs increases their biodegradability, thereby decreasing their accumulation in aquatic environments. The solubility of EALs also makes it easier for aquatic life to metabolize and excrete these chemicals (U.S. EPA, 2011). Overall, EALs reduce bioaccumulation potential and toxic effects to aquatic life.

Metals

Vessel discharges can contain metal constituents from a variety of on-board sources, including graywater, bilgewater, exhaust gas emission control systems, and firemain systems. While some metals, including copper, nickel, and zinc, are known to be essential to organism function when present at certain levels, many others, including thallium and arsenic, are non-essential and/or are known to have only adverse impacts. Even essential metals may harm organism function in sufficiently elevated concentrations. Some metals may also bioaccumulate in the tissues of aquatic organisms, intensifying toxic effects. Through a process called biomagnification, concentrations of some metals can increase up the food chain, leading to elevated levels in commercially harvested fish species (U.S. EPA, 2007).

Vessel hulls and appendages are frequently coated in metal-based biocides to prevent

biofouling. The most widely-used metal in biocides is copper. While it is an essential nutrient, copper can be both acutely and chronically toxic to fish, aquatic invertebrates, and aquatic plants at higher concentrations. Elevated concentrations of copper can adversely impact survivorship, growth, and reproduction of aquatic organisms (U.S. EPA, 2016). Copper can inhibit photosynthesis in plants and interfere with enzyme function in both plants and animals in concentrations as low as 4 μg/L (U.S. EPA, 2016).

Other Pollutants

Vessel discharges can contain a variety of other toxic, conventional, and nonconventional pollutants. This rule would help to prevent and control the discharge of certain pollutants that have been identified in the various discharges. For example, graywater can contain phthalates phenols, and chlorine (U.S. EPA, 2008). These compounds can cause a variety of adverse impacts on aquatic organisms and human health. Phthalates are known to interfere with reproductive health, liver, and kidney function in both animals and humans. (Sekizawa et al., 2003; DiGangi et al., 2002). Chlorine can cause respiratory problems, hemorrhaging, and acute mortality to aquatic organisms even at relatively low concentrations (U.S. EPA, 2008).

Vessel discharges may also contain certain biocides used in vessel coatings, which can be harmful to aquatic organisms. For example, cybutryne, also commonly known as Irgarol 1051, is a biocide that functions by inhibiting the electron transport mechanism in algae, thus inhibiting growth. Numerous studies indicate that cybutryne is both acutely and chronically toxic to a range of marine organisms, and in certain cases, more harmful than tributyltin (Carbery et al, 2006; Van Wezel and Van Vlaardingen, 2004).

Some vessel discharges are more acidic or basic than the receiving waters, which can have a localized effect on pH (Alaska Department of Environmental Conservation, 2007). For example, exhaust gas emission control systems remove sulfur dioxide in exhaust gas and dissolve it in washwater, where it is then ionized and produces an acidic washwater. Research has shown that even minor changes in ambient pH can have profound effects, such as developmental defects, reduced larval survivorship, and decreased calcification of corals and shellfish (Oyen et al., 1991; Zaniboni-Filho et al., 2009, Marubini and Atkinson, 1999).

V. Scope of the Regulatory Action

A. Waters

The proposed rule would apply to incidental discharges from non-military, non-recreational vessels operating in the waters of the United States or the waters of the contiguous zone. 33 U.S.C. 1322(p)(8)(B). Sections 502(7), 502(8), and 502(9) of the CWA define the terms ''navigable waters,'' ''territorial seas,'' and ''contiguous zone,'' respectively. The term ''navigable waters'' means the waters of the United States including inland waters and the territorial seas, where the United States includes the 50 states, the District of Columbia, the Commonwealth of Puerto Rico, the U.S. Virgin Islands, Guam, American Samoa, the Commonwealth of the Northern Mariana Islands, and the Trust Territories of the Pacific Islands. The term ''territorial seas'' means the belt of seas that extends three miles seaward from the line of ordinary low water along the portion of the coast in direct contact with the open sea and the line marking the seaward limit of inland waters. The term ''contiguous zone'' means the entire zone established or to be established by the United States under Article 24 of the Convention of the Territorial Sea and the Contiguous Zone.

B. Vessels

The proposed rule would apply to discharges incidental to the normal operation of a vessel as set forth in CWA Section 312(p)(2). The proposed rule would not apply to discharges incidental to the normal operation of a vessel of the Armed Forces subject to CWA Section 312(n); a recreational vessel subject to CWA Section 312(o); a small vessel less than 79 feet in length or a fishing vessel, except that the proposed rule would apply to any discharge of ballast water from a small vessel or fishing vessel; or a floating craft that is permanently moored to a pier, including a floating casino, hotel, restaurant, or bar. The types of vessels intended to be covered under the proposed rule include, but are not limited to, public vessels of the United States, commercial fishing vessels (for ballast water only), passenger vessels such as cruise ships and ferries, barges, tugs and tows, offshore supply vessels, mobile offshore drilling units, tankers, bulk carriers, cargo ships, container ships, and research vessels. EPA estimates that the domestic and international vessel population that would be subject to the proposed national standards of performance is approximately 82,000 vessels. The proposed rule also would not apply to

a narrow category of ballast water discharges that Congress believed do not pose a risk of spreading or introducing ANS (VIDA Senate Report, at 10), or to any discharges that result from (or contain material derived from) an activity other than the normal operation of a vessel (33 U.S.C. 1322(p)(2)(B)(iii)). Unless otherwise provided by CWA Section 312(p), any incidental discharges excluded from regulation in the VIDA remain subject to the pre-enactment status quo (*e.g.,* State law, NPDES permitting, etc.). VIDA Senate Report, at 10.

The national standards of performance proposed herein apply equally to new and existing vessels except in such cases where the proposed rule expressly distinguishes between such vessels as authorized by CWA Section 312(p)(4)(C)(ii).

C. Incidental Discharges

EPA proposes to establish general as well as specific national standards of performance for discharges incidental to the normal operation of a vessel described in CWA Section 312(p)(2). The general standards would be applicable to all vessels and incidental discharges subject to the proposed rule to the extent that the requirements are appropriate for each incidental discharge. The specific standards would be applicable to specific incidental discharges from the normal operation of the following types of vessel equipment and systems: Ballast tanks, bilges, boilers, cathodic protection, chain lockers, decks, desalination and purification systems, elevator pits, exhaust gas emission control systems, fire protection equipment, gas turbines, graywater systems, hulls and associated niche areas, inert gas systems, motor gasoline and compensating systems, non-oily machinery, pools and spas, refrigerators and air conditioners, seawater piping, and sonar domes.

D. Emergency and Safety Concerns

The VIDA recognizes that safety of life at sea and other emergency situations not resulting from the negligence or malfeasance of the vessel owner, operator, master, or person in charge may arise, and that the prevention of loss of life or serious injury may require operations that would not otherwise be consistent with these standards. Therefore, it is reasonably likely that no person would be found to be in violation of the proposed rule under the affirmative defense described in CWA Section 312(p)(8)(C). The corresponding USCG implementing regulations would include language to address vessel emergency and safety considerations.

E. Effective Date

The proposed national standards of performance, once finalized, would become effective beginning on the date upon which the regulations promulgated by the Secretary pursuant to CWA Section 312(p)(5) governing the implementation, compliance, and enforcement of the national standards of performance become final, effective, and enforceable. Per CWA Section 312(p)(3)(c), as of that date, the requirements of the VGP and all regulations promulgated by the Secretary pursuant to Section 1101 of the NANPCA (16 U.S.C. 4711) (as in effect on December 3, 2018), including the regulations contained in subparts C and D of part 151 of title 33, Code of Federal Regulations, and 46 CFR 162.060 (as in effect on December 3, 2018), shall be deemed repealed and have no force or effect. Similarly, as of that same date, any CWA Section 401 certification requirement in Part 6 of the 2013 VGP, shall be deemed repealed and have no force or effect.

VI. Stakeholder Engagement

During the development of the proposed rule, EPA and the USCG reached out to other federal agencies, states, tribes, non-governmental organizations, and the maritime industry. Detailed documentation of the stakeholder outreach prior to the proposal is in the public docket for the proposed rulemaking. EPA also intends to hold stakeholder engagement opportunities during the proposed rule public comment period. General summaries of the outreach are included in this section and in section XII. Statutory and Executive Order Reviews.

A. Informational Webinars and Public Listening Session

EPA, in coordination with the USCG, hosted two informational webinars on May 7 and 15, 2019 to enhance public awareness about the VIDA and provide opportunity for engagement. During the webinars, EPA and the USCG provided a general overview of the VIDA, discussed interim and future discharge requirements, described future state and public engagement opportunities, and answered clarifying questions raised by the audience. The webinar recordings and presentation material are available at *https://www.epa.gov/vessels-marinas-and-ports/vessel-incidental-discharge-act-vida-engagement-opportunities*.

Additionally, EPA, in coordination with the USCG, hosted a public, in-person listening session at the U.S. Merchant Marine Academy in New York on May 29–30, 2019. At the listening session, EPA with the support of the USCG, provided an overview of the VIDA, described the interim requirements and the framework for the future regulations, and conducted sessions on key vessel discharges to provide an opportunity for public input. Fifty-two individuals from a variety of stakeholder groups attended and provided input. Public input largely centered on ballast water management systems, including testing methods and monitoring requirements. Stakeholders requested harmonization of domestic regulations with those of the International Maritime Organization (IMO), such as standards for exhaust gas emission control systems. Input was also received on challenges with compliance and reporting under the VGP and the USCG ballast water regulations. The meeting agenda and a summary of the comments received are available in the public docket for this proposed rulemaking.

B. Post-Proposal Public Meetings

During the public comment period for this proposed rule, EPA intends to hold public meetings to provide an opportunity for stakeholders to ask questions about the proposed rule and describe procedures for submitting formal comments on the rule. Details for these public meetings will be made available at *https://www.epa.gov/vessels-marinas-and-ports/vessel-incidental-discharge-act-vida-engagement-opportunities*.

C. Consultation and Coordination With States

1. Federalism Consultation

Pursuant to the terms of Executive Order 13132, on July 9, 2019 in Washington, DC, EPA and the USCG conducted a Federalism consultation briefing to allow states and local officials to have meaningful and timely input into EPA rulemaking for the development of the national standards of performance. Additional information regarding the VIDA Federalism Consultation can be found in section XII. Statutory and Executive Order Reviews.

2. Governors Consultation

CWA Section 312(p)(4)(A)(iii)(II) directs EPA to develop a process for soliciting input from interested Governors to allow interested Governors to inform the development of the national standards of performance, including sharing information relevant to the process. On July 10 and 18, 2019, EPA and the USCG, with the support and assistance of the National

Governors Association, held meetings with Governor representatives to provide an overview of the VIDA, discuss state authorities under the VIDA, and solicit input on a process that would meet both the statutory requirements and state needs. Based on this input, EPA developed its ''Governors' input process'' for this rulemaking. Thirteen states (Alaska, California, Hawaii, Maryland, Michigan, Minnesota, New York, North Carolina, Ohio, Puerto Rico, Virginia, Washington, and Wisconsin) participated in the process as did representatives from the Western Governors Association, the Pacific States Marine Fisheries Commission, and the All Islands Coral Reef Committee.

EPA developed the VIDA Governors' input process to outline EPA's intended approach to engage with the states and address their expressed interest for multiple enhanced engagement opportunities (possibly regionally-based), additional details regarding the direction of the proposed standards, and ultimately, more involvement in the development of the national standards of performance.

The Governors' input process included three regional, web-based forums for Governors and their representatives to inform EPA on the challenges and concerns associated with existing requirements under the VGP and to discuss potential considerations for key discharges of interest. The three regional, web-based forums were held on September 10 (Western States), September 12, (Great Lakes States) and September 19 (All States), 2019. During each forum subject-matter experts from EPA provided a brief background on the VIDA followed by organized discussions regarding the key discharges identified by the regional representatives prior to the forum. During the organized discussions, interested Governors' representatives commented on the presentation content, shared applicable scientific or technical information, and provided suggested options for EPA to consider during the development of the national standards of performance. In addition to the verbal input provided during the three regional, web-based forums, EPA accepted written comments. Copies of those written comments are included in the public docket for this proposed rule.

Additionally, EPA held two follow-up calls with representatives from the Great Lakes states on December 18, 2019. During each call, EPA addressed the comments that had been submitted by Great Lakes states, including comments on specific requirements of the VIDA, non-ballast water discharges, and best available technology as it relates to ballast water treatment systems. Representatives from Michigan, New York, Wisconsin, Pennsylvania, Illinois, Minnesota, and Ohio attended the calls.

EPA also held a follow-up call with representatives from the West Coast states on January 15, 2020. During the call, EPA addressed the comments that had been submitted by West Coast states, including comments on outreach and engagement, the best available technology analysis for ballast water treatment systems, and regulation of biofouling and in-water cleaning and capture devices. Representatives from the states of California, Hawaii, Oregon, and Washington, as well as representatives from the Pacific States Marine Fisheries Commission and the Western Governors Association attended the call.

In conjunction with the requirement to engage states in the development of the proposed standards, CWA Section 312(p)(4)(A)(iii)(III) provides for governors to formally object to a proposed national standard of performance. As detailed in CWA Section 312(p)(4)(A)(iii)(III), an interested Governor may submit to the Administrator a written, detailed objection to the proposed national standard of performance, describing the scientific, technical, and operational factors that form the basis of the objection. Before finalizing a national standard of performance for which there has been an objection from one or more interested Governors, the Administrator shall provide a written response to the objection detailing the scientific, technical, or operational factors that form the basis for that standard.

To be considered an objection by the Administrator under CWA Section 312(p)(4)(A)(iii)(III)(aa), an objection letter from the Governor must:

- Be submitted in writing to the Administrator;
- Be signed by the Governor;
- Clearly state the proposed standard that is the subject of the objection;
- Describe the scientific, technical, or operational factors that indicate why the proposed standard does not represent the best practicable control technology currently available (BPT), best conventional pollutant control technology (BCT), and/or best available technology economically achievable (BAT) to address the conventional pollutants, toxic pollutants, and nonconventional pollutants contained in the discharge; and
- Include the scientific, technical, or operational factors that indicate what BPT, BCT, and BAT is available that should be included in the proposed standard to address the conventional pollutants, toxic pollutants, and nonconventional pollutants contained in the discharge.

In addition, to facilitate EPA's due consideration of any objections within a timeframe that would enable EPA to meet its statutory deadline for this rulemaking, EPA requests that any Governor's objection be submitted within 60 days of the published Notice of Proposed Rulemaking.

Pursuant to CWA Section 312(p)(4)(A)(iii)(III)(bb), the Administrator's response would:

- Be provided in writing to each interested Governor prior to publication of the final rule;
- Be signed by the Administrator; and
- Include the scientific, technical, or operational factors that form the basis for the proposed standard.

3. Comments (Federalism Consultation and Governors' Consultation Comments)

During the engagement with states, EPA received pre-proposal comments from states, governors, and governors' representatives. EPA received comments submitted by representatives from Hawaii, Guam, American Samoa, the Commonwealth of the Northern Mariana Islands, Puerto Rico, U.S. Virgin Islands, Florida, California, Washington, Oregon, Wisconsin, Michigan, Minnesota, and the Western Governors Association. The pre-proposal comments primarily focused on ballast water, biofouling, and the state engagement process. These comments can be found in the public docket for this proposed rule.

VII. Definitions

The proposed rule includes definitions for several statutory, regulatory, and technical terms. These definitions apply solely for the purposes of the proposed rule and do not affect the definition of any similar terms used in any other context. By including these definitions, EPA has, where possible, relied on existing definitions from other laws, regulations, and the VGP to provide consistency with existing requirements. Many of the proposed definitions are taken either verbatim or with minor clarifying edits from the VIDA, the legislation upon which this proposed rule is based. This includes definitions for: ANS, ballast water, ballast water exchange, ballast water management system, Captain of the Port (COTP) Zone, commercial vessel—as that term is used for vessels operating within the Pacific Region, empty ballast tank, Great Lakes State, internal waters, live or living, marine pollution control device, organism, Pacific Region, port or

place of destination, render nonviable, saltwater flush, Secretary, small vessel or fishing vessel (and the term ''fishing vessel'' to direct the reader to the definition of ''small vessel or fishing vessel''), and VGP.

To provide additional clarity for certain proposed standards, if terms were not defined in the VIDA, the proposed rule includes definitions from other sections of the CWA, USCG regulations, the VGP, and other regulations. Additionally, EPA is proposing to include new definitions for federally-protected waters, fouling rating, marine growth prevention system, mid-ocean, and oil-to-sea interface. Terms not defined in the proposed rule have the meaning defined under the CWA and any applicable regulations.

VIII. Development of National Discharge Standards of Performance

The CWA established a two-step process for implementation of increasingly stringent limitations. The first step, to be accomplished by July 1, 1977, required compliance with standards based on ''the application of the best practicable control technology currently available [BPT] as defined by the Administrator. . . .'' 33 U.S.C. 1311(b)(1)(A). The second step, to be accomplished by July 1, 1987, required compliance with standards based on application of the ''best available technology economically achievable [BAT] for such category or class. . . .'' 33 U.S.C. 1311(b)(2)(A). The CWA, as amended in 1977, replaced the BAT standard with a new standard, ''best conventional pollutant control technology [BCT],'' but only for certain so-called ''conventional pollutants'' (*i.e.,* total suspended solids, oil and grease, biochemical oxygen demand (BOD_5), fecal coliform, and pH). 33 U.S.C. 1311(b)(2)(E) (1976 ed., Supp. III). Section 312(p)(4)(B)(i) of the VIDA requires the national standards of performance promulgated for conventional pollutants, toxic pollutants, and nonconventional pollutants (including ANS) be developed using the same statutory framework as applied to the VGP. Specifically, the national standards of performance developed under the VIDA for all categories and classes of vessels must require the application of best practicable control technology currently available (BPT) for conventional, toxic, and nonconventional pollutants; best conventional pollutant control technology (BCT) for conventional pollutants; and best available technology economically achievable (BAT) for toxic and nonconventional pollutants (including ANS), which will result in reasonable progress toward the national goal of eliminating the discharge of all pollutants. 33 U.S.C. 1322(p)(4)(B)(i). The VIDA specifically adopts by reference the existing BPT, BCT, and BAT standards defined elsewhere in the CWA at Sections 301(b) and 304(b). 33 U.S.C. 1322(p)(1)(F), (G), (I). CWA Section 312(p)(4)(B)(ii) also directs EPA to use BMPs to control or abate any discharge incidental to the normal operation of a vessel if numeric discharge standard standards are infeasible or if the BMPs are reasonably necessary to achieve the standards or to carry out the purpose of reducing and eliminating the discharge of pollutants.

In addition, CWA Section 312(p)(4)(B) establishes minimum requirements for the national standards of performance such that, ''the combination of any equipment or best management practice . . . shall not be less stringent than'' the effluent limits and related requirements established in parts 2.1, 2.2, or 5 of the VGP. 33 U.S.C. 1322(p)(4)(B)(iii). Thus, while the statute directs EPA to set the national standards of performance at the level of BPT/BCT/BAT, depending on the pollutant, it also creates a presumption that those standards would provide protection at least equivalent to the VGP requirements absent one of the exceptions at CWA Section 312(p)(4)(D)(ii)(II) for situations where either new information becomes available that ''would have justified the application of a less-stringent standard'' or ''if the Administrator determines that a material technical mistake or misinterpretation of law occurred when promulgating the existing standard.'' Absent one of those exceptions, the statute directs that EPA ''shall not revise a standard of performance . . . to be less stringent than an applicable existing requirement.'' 33 U.S.C. 312(p)(4)(D)(ii)(I).

EPA endeavored to identify instances where the BPT/BCT/BAT level of control called for new, more stringent options for the national standards of performance; however, where EPA identified no such new information or options, EPA is continuing to rely on the BPT/BCT/BAT analysis that led to the development of the VGP requirements. This approach is consistent with EPA's obligations under CWA Section 312(p)(4) for the following reasons. The effluent limits that EPA adopted in the VGP were already the product of a BPT/BCT/BAT analysis described in the permit fact sheets for both the 2008 and 2013 iterations of the VGP and corresponding supporting materials. The text of CWA Section 312(p)(4)(D)(ii) prohibits EPA from ''revis[ing] a standard of performance. . . to be less stringent than an applicable existing requirement.'' There is a narrow exception for instances where EPA identifies absent new information or technical or legal error in the VGP analysis. Absent such exception, the VIDA prohibits EPA from identifying a less stringent option as BPT/BCT/BAT. Indeed, by identifying the VGP as the minimum requirements for the national standards of performance and then expressly identifying the circumstances under which EPA could select a different, less stringent standard (*i.e.,* new information or error), the text and legislative history of the VIDA show that Congress intended to preserve the existing VGP requirements as a regulatory floor. VIDA Senate Report, at 12 (''The exceptions to this provision [for new information and technical or legal error] would provide the sole basis for the Administrator to weaken standards of performance compared to the legacy VGP requirements. . . .''). Moreover, Congress did not intend for EPA to depart from the considerations that informed the VGP. To the contrary, although the VIDA is a permit-less regime, Congress defined BPT, BCT, and BAT with ''intentional[] cross-reference[s]'' to where those terms are used elsewhere in the CWA ''to ensure that the Administrator makes identical considerations when setting the standards of performance under CWA Section 312(p) as the Administrator was previously required to do when setting technology-based effluent limits for permits'' like in the VGP. VIDA Senate Report, at 11. It is significant that Congress gave EPA only a two-year deadline to develop the national standards of performance for marine pollution control devices for each type of discharge incidental to the normal operation of a vessel that is subject to regulation under the VIDA. The VGP requirements address more than 30 such discharges and given the short timeframe that Congress set forth for this task, EPA did not think it was necessary or appropriate to re-analyze the marine pollution control device standards for which there have not been meaningful changes in technology or practice since EPA last undertook a BPT/BCT/BAT analysis. In contrast to this initial promulgation of standards, Congress established a significantly longer five-year cycle for review and, if appropriate, future revision of the initial standards. 33 U.S.C. 1322(p)(4)(D)(i).

While EPA is, for most of the discharges addressed in this

rulemaking, relying on the BPT/BCT/BAT analysis that was performed to develop the VGP, EPA is not incorporating the VGP requirements verbatim. In many cases, EPA proposes change to translate the VGP discharge requirements into national standards of performance or otherwise improve the clarity to enhance implementation and enforceability. As the proposed changes do not materially differ from the requirements established in the VGP, EPA can reasonably rely on the BPT/BCT/BAT analysis that supported the VGP to develop the new proposed standards under the VIDA.

Where EPA research identified new alternatives or new options for marine pollution control devices, EPA evaluated those options as candidates for new BPT/BCT/BAT requirements. The CWA requires consideration of BPT for conventional, toxic, and nonconventional pollutants. CWA Section 304(a)(4) designates the following as conventional pollutants: Biochemical oxygen demand, total suspended solids, fecal coliform, pH, and any additional pollutants defined by the Administrator as conventional. The Administrator designated oil and grease as an additional conventional pollutant on July 30, 1979. 40 CFR 401.16. Toxic pollutants (*e.g.,* toxic metals such as arsenic, mercury, selenium, and chromium; toxic organic pollutants such as benzene, benzo-a-pyrene, phenol, and napthalene) are those outlined in CWA Section 307(a) and subsequently identified in EPA regulations at 40 CFR 401.15 and 40 CFR part 423 Appendix A. All other pollutants are nonconventional.

In determining BPT, under CWA Sections 301(b)(1)(A) and 304(b)(1)(B), and 40 CFR 125.3(d)(1), EPA evaluates several factors. EPA first considers the cost of application of technology in relation to the effluent reduction benefits. The Agency also considers the age of equipment and facilities, the processes employed, engineering aspects of various types of control technologies, process changes, non-water quality environmental impacts (including energy requirements), and such other factors as the Administrator deems appropriate. If, however, existing performance is uniformly inadequate within an industrial category, EPA may establish limitations based on higher levels of control if the Agency determines that the technology is available in another category or subcategory and can be practically applied to this industrial category.

The 1977 amendments to the CWA required EPA to identify effluent reduction levels for conventional pollutants associated with BCT for discharges from existing industrial point sources. 33 U.S.C. 1311(b)(2)(E); 1314(b)(4)(B); 40 CFR 125.3(d)(2). In addition to considering the other factors specified in CWA Section 304(b)(4)(B) to establish BCT requirements, EPA also considers a two-part ''cost-reasonableness'' test. EPA explained its methodology for the development of BCT requirements in 1986. See 51 FR 24974, July 9, 1986.

For toxic pollutants and nonconventional pollutants, EPA promulgates discharge standards based on BAT. 33 U.S.C. 1311(b)(2)(A); 1314(b)(2)(B); 40 CFR 125.3(d)(3). In establishing BAT, the technology must be technologically ''available'' and ''economically achievable.'' The factors considered in assessing BAT include the cost of achieving BAT effluent reductions, the age of equipment and facilities involved, the process employed, potential process changes, non-water quality environmental impacts, including energy requirements, and other such factors as the Administrator deems appropriate. EPA retains considerable discretion in assigning the weight accorded to these factors. *See Weyerhaeuser Co* v. *Costle,* 590 F.2d 1011, 1045 (D.C. Cir. 1978). BAT discharge standards may be based on effluent reductions attainable through changes in a facility's processes and operations. Where existing performance is uniformly inadequate, BAT may reflect a higher level of performance than is currently being achieved within a subcategory based on technology transferred from a different subcategory or category. *Am. Paper Inst.* 5 V. *Train,* 539 F.2d 328, 353 (D.C. Cir. 1976); *Am. Frozen Food Inst.* V. *Train*, 539 F.2d 107, 132 (D.C. Cir. 1976). BAT may be based upon process changes or internal controls, even when these technologies are not common industry practice.

The proposed rule contains discharge standards that correspond to required levels of technology-based control (BPT, BCT, BAT) for discharges incidental to the normal operation of a vessel, as required by the CWA. As noted above, some discharge standards have been established by examining other existing laws and requirements (*e.g.,* Oil Pollution Act, APPS, and the Clean Hull Act). Where these laws already exist, it was deemed feasible for the operators to implement these practices as part of the proposed standards because these are demonstrated practices that EPA found to be technologically available and economically practicable (BPT) or achievable (BAT). For example, the proposed standards reaffirm requirements of the Clean Hull Act that coating on vessel hulls must not contain TBT or any other organotin compound used as a biocide. In some cases, such as with certain discharges of oils, graywater from passenger vessels, and ballast water, numeric discharge standards are being proposed. In assessing the availability and achievability of the technologies discussed herein, in addition to the rationale for the VGP effluent limits, EPA considered studies and data from both domestic and international sources including studies and data from foreign-flagged vessels as appropriate.

Additionally, EPA is proposing that two of the VGP-named discharges do not require specific discharge requirements beyond the general discharge requirements in Subpart B. EPA acknowledges that discharges from motor gasoline and compensating systems and inert gas systems are indeed discharges incidental to the normal operation of a vessel; however, EPA determined that the requirements outlined in the general discharge standards section in Subpart B of the proposed rule are sufficient and at least as stringent as the VGP.

A. Discharges Incidental to the Normal Operation of a Vessel—General Standards

This section describes the proposed national standards of performance associated with the general discharge requirements proposed in 40 CFR part 139, subpart B. These proposed standards are designed to apply to all vessels and incidental discharges subject to the proposed rule to the extent the requirements are appropriate for each incidental discharge. These proposed standards are proactive and preventative in nature and are designed to minimize the introduction of pollutants into the waters of the United States and the waters of the contiguous zone. These proposed standards are based on EPA's analysis of available and relevant information, including available technical data, existing statutes and regulations, statistical industry information, and research studies included in the public docket for this proposed rule.

1. General Operation and Maintenance

The first category of proposed national standards of performance would establish requirements associated with the general operation and maintenance vessel practices that are designed to eliminate or reduce the discharge of pollutants. EPA considers these proposed requirements to be consistent with the VGP requirements

and provides a consolidation of requirements from many subparts within Part 2 of the VGP. The first requirement proposes that all discharges covered under this rulemaking be minimized. For purposes of this proposed rule and consistent with the technology-based requirements of the CWA, EPA is proposing to clarify the term ''minimize'' to mean to reduce or eliminate to the extent achievable using any control measure that is technologically available and economically practicable and achievable and supported by demonstrated BMPs such that compliance can be documented in shipboard logs and plans as determined by the Secretary (that is, the Secretary of the department in which the USCG is operating). The ''minimize'' requirement is included pursuant to the CWA Section 312(p)(2)(H) definition of BMP within the technology-based BPT/BCT/BAT analysis. Minimizing discharges provides a reasonable approach by which EPA, the regulated community, and the public can determine and evaluate appropriate control measures for vessels to control all specific discharges identified in 40 CFR part 139, subpart B of this proposed rulemaking. To minimize discharges, operators should consider the use of reception facilities, storage onboard the vessel, or reduced production of pollutants to be discharged. For some vessel discharges, such as for graywater, minimization of pollutants in those discharges can be achieved without using highly engineered, complex treatment systems. Other vessel discharges, such as ballast water, may require more complex behavioral practices such as saltwater flushing or ballast water exchange.

The proposed general operation and management standard would also include provisions from the VGP (Parts 2.2.2 and 5.3.1.2) that are intended to minimize the discharges from vessels to nearshore waters by requiring, to the extent practicable, that vessels discharge while underway and as far from shore as practical.

The proposed general operation and management standard also would include requirements that limit the types and quantities of materials discharged. For one, EPA is clarifying that the addition of any materials to an incidental discharge, other than for treatment of the discharge, that is not incidental to the normal operation of the vessel, is prohibited as is using dilution to meet any effluent discharge standards. EPA is also proposing a requirement specifying that only the amount of a material (*e.g.,* disinfectant, cleaner, biocide, coating, sacrificial anode) necessary to perform its intended function is authorized to be used if its residue could be discharged and that any such materials used do not contain biocides or toxic or hazardous materials banned for use in the United States. Also, EPA is proposing to prohibit the discharge of any material used that will be subsequently discharged that contains any materials banned for use in the United States. For any pesticide products (*e.g.,* biocides, anti-microbials) subject to FIFRA registration, vessel operators must follow the FIFRA label for all activities that result in a discharge into the waters of the United States or the waters of the contiguous zone.

The presence or use of toxic or hazardous materials may be necessary for the operation of vessels. For purposes of the proposed rule, the term ''Toxic or Hazardous Materials'' means any toxic pollutant identified in 40 CFR 401.15 or any hazardous material as defined in 49 CFR 171.8. EPA is proposing requirements for how toxic or hazardous materials are managed to minimize the potential for discharge of these materials. Toxic or hazardous material containers must be appropriately sealed, labeled, and secured, and located in an area of the vessel that minimizes exposure to ocean spray and precipitation consistent with vessel design. Materials that may not be considered toxic in small concentrations could pose an environmental threat if significant amounts are washed overboard, particularly in shallow or impaired waters. Wastes should be managed in accordance with any applicable local, state, and federal regulations, which are outside of the scope of this proposed rule. For example, the Resource Conservation and Recovery Act (RCRA) governs the generation, transportation, storage, and disposal of solid and hazardous wastes.

Therefore, the proposed rule would require that all vessel operators practice good environmental stewardship by minimizing any exposure of cargo or other onboard materials that may be inadvertently discharged by containerizing or covering materials with a tarp, and generally limiting any exposure of these materials to wind, rain, or spray. The proposed rule acknowledges that these requirements would apply unless the vessel operator reasonably determines this would interfere with essential vessel operations or safety of the vessel or doing so would violate any applicable regulations that establish specifications for safe transportation, handling, carriage, and storage of toxic or hazardous materials. Also, to avoid discharges and prevent emergency or other dangerous situations, the proposed standard would require that containers holding toxic or hazardous materials not be overfilled and incompatible materials not be mixed in containers.

Like the requirements related to toxic and hazardous materials, the proposed standard would also require control measures to prevent or minimize the overboard discharge of cargo, on-deck debris, garbage, and residue and would prohibit the jettisoning of cargo or toxic or hazardous materials. EPA proposal would also require vessel operators to clean out cargo residues (*i.e.,* broom clean or equivalent) from any cargo compartment or tank prior to discharging washwater from such areas overboard. EPA is proposing that these material management measures be followed to minimize the discharge of pollutants.

The proposed rule would also require vessel operators to maintain their topside surface (*i.e.,* outer surfaces above the waterline) in a manner that minimizes the discharge of rust (and other corrosion by-products), cleaning compounds, paint chips, non-skid material fragments, and other materials associated with exterior topside surface preservation. Additionally, this EPA standard proposes that coating techniques selected for any topside surfaces must minimize the residual paint and coating entering the water and that the discharge of any unused paints and coatings is prohibited.

The last proposed general operation and maintenance requirement specifies that any equipment that is expected to release, drip, leak, or spill oil or oily mixtures, fuel, or other toxic or hazardous materials that may be discharged or drained or pumped to the bilge, must be maintained regularly to minimize the discharge of pollutants. As with other requirements in the proposed general operation and maintenance standard, EPA considers this requirement to be consistent with the bilgewater requirements in Part 2.2.2 of the VGP.

2. Biofouling Management

Vessel biofouling is the accumulation of aquatic organisms such as plants, animals, and micro-organisms on vessel equipment or systems submerged or exposed to the aquatic environment. Biofouling can be broadly separated into microfouling, which consists of microscopic organisms including bacteria and diatoms, and macrofouling, which consists of large, distinct multicellular organisms visible to the

human eye, such as barnacles, tubeworms, or fronds of algae. Studies suggest that biofouling on vessel equipment and systems is one of the main vectors for the introduction and spread of ANS (Drake and Lodge, 2007; Gollasch, 2002; Hewitt and Campbell, 2010; Hewitt et al., 2009). Biofouling also produces drag on a vessel hull and protruding niche areas, requiring greater fuel consumption and increased greenhouse gas emissions. It can additionally result in hull corrosion and blockage of internal piping, such as the engine cooling and firemain systems, thereby degrading the integrity of the vessel structure and impeding safe operation.

EPA understands the statutory definition of ''discharge incidental to the normal operation of a vessel'' (incidental discharge) at 33 U.S.C.1322(a)(12) to include any discharge of biofouling organisms from vessel equipment and systems. Consistent with the VGP discharges of biofouling organisms from vessel equipment and systems while the vessel is immersed or exposed to the aquatic environment are incidental to the normal operation of a vessel. Such discharges during normal operation of the vessel include, but are not limited to, those from maintenance and cleaning activities of hulls, niche areas, and associated coatings. EPA included management requirements to minimize the discharge of biofouling organisms from vessel equipment and systems in both the VGP and the discharge regulations for the vessels of the Armed Forces. 33 U.S.C. 1322(n)). The VGP in Parts 2.2.23 and 4.1.3, respectively, required that vessel operators minimize the transport of attached living organisms and conduct annual inspections of the vessel hull, including niche areas, for fouling organisms. Part 4.1.4 of the VGP also required vessel operators to prepare drydock inspection reports noting that the vessel hull and niche areas had been inspected for attached living organisms and those organisms had been removed or neutralized and make these reports available to EPA or an authorized representative of EPA upon request. With one of the legislative purposes of the VIDA being to establish uniform national incidental discharge regulations that are as stringent as the VGP, except in those circumstances specified by the VIDA in CWA Section 312(p)(4)(D)(ii)(II), EPA is proposing to include requirements for the discharge of biofouling organisms from vessel equipment and systems in this rulemaking.

The proposed rule would require each vessel to develop and follow a biofouling management plan with a goal to prevent macrofouling, thereby minimizing the potential for the introduction and spread of ANS. A biofouling management plan that would be consistent with the VGP and fulfill the purpose of the proposed rule is one that provides a holistic strategy that considers the operational profile of the vessel, identifies the appropriate antifouling systems, and details the biofouling management practices for specific areas of the vessel. The details of the plan will be established by the Secretary, although the plan elements must prioritize procedures and strategies to prevent macrofouling.

While the VGP does not explicitly require a biofouling management plan, it requires the majority of the components of the proposed biofouling management plan individually, such as the consideration of vessel class, operations, and biocide release rates and components in the selection of antifouling systems, an annual inspection of the vessel hull and niche areas for assessment of biofouling organisms and condition of anti-fouling paint, a drydock inspection report noting that the vessel hull and niche areas have been inspected for biofouling organisms and those organisms have been removed or neutralized, reporting of cleaning schedules and methods, and appropriate disposal of wastes generated during cleaning operations. Additionally, according to the Clean Hull Act of 2009, every vessel engaging in one or more international voyages is required to carry an antifouling system certificate that contains the details of the antifouling system. Moreover, under the National Invasive Species Act, the USCG requires the individual in charge of any vessel equipped with ballast water tanks that operates in the waters of the United States to maintain a ballast water management plan that has been developed specifically for the vessel and that will allow those responsible for the plan's implementation to understand and follow the vessel's ballast water management strategy and comply with the requirements. The ballast water management plan must also include detailed biofouling maintenance and sediment removal procedures (33 CFR 151.2050(g)(3)). According to guidance issued by the USCG on these regulations, such procedures constitute a ''Biofouling Management and Sediment Plan.'' Under this guidance, the USCG advised that IMO Resolution Marine Environment Protection Committee (MEPC) 207(62) provides a basis for developing and implementing a vessel-specific biofouling management plan.

Developing individual biofouling management plans for vessels is important because vessels can vary widely in operational profile and, therefore, in the extent and type of biofouling. EPA recognizes, however, that vessels with similar operational profiles, such as vessels that cross the same waterbodies, travel at similar speeds, and share the same design, may also employ the same management measures, such as selecting the same types of antifouling systems, and applying the same inspection and cleaning schedules. EPA anticipates that fleet owners may develop a biofouling management plan template that can be readily adapted into a vessel-specific biofouling management plan.

3. Oil Management

The proposed rule aims to minimize discharges of oil, including oily mixtures. The proposed standard would require vessel operators to use control and response measures to minimize and contain spills and overflows during fueling, maintenance, and other vessel operations. Also, the proposed standard specifies that the discharge of used or spent oil no longer being used for its intended purpose would be prohibited, including any used or spent oil that may be added to an incidental discharge that is otherwise authorized to be discharged. Discharges of small amounts of oil, including oily mixtures, incidental to the normal operation of a vessel are permissible provided such discharges comply with the otherwise applicable existing legal requirements. For example, consistent with the CWA and as implemented by the 2013 VGP, this standard would prohibit the discharge of oil in such quantities as may be harmful, as defined in 40 CFR 110.3.

Section 139.3 of the proposed rule specifies that, except as expressly provided, nothing in this part would affect the applicability of any other provision of Federal law as specified in several statutory and regulatory citations. Two of those citations are to CWA Section 311 and to APPS. Those two laws address discharges of oil. Under CWA Section 311, any oil, including oily mixtures, other than those exempted in 40 CFR 110.5, may not be discharged in such quantities as ''may be harmful,'' which is defined to include those discharges that violate applicable water quality standards or ''cause a film or sheen upon or discoloration of the surface of the water or adjoining shorelines or cause a sludge

or emulsion to be deposited beneath the surface of the water or upon adjoining shorelines.'' Discharges that are not included in the description of ''may be harmful'' include discharges of oil from a properly functioning vessel engine (including an engine on a public vessel) and any discharges of such oil accumulated in the bilges of a vessel discharged in compliance with 33 CFR part 151, subpart A; other discharges of oil permitted under MARPOL 73/78, Annex I, as provided in 33 CFR part 151, subpart A; and any discharge of oil explicitly permitted by the Administrator in connection with research, demonstration projects, or studies relating to the prevention, control, or abatement of oil pollution. Regarding the APPS (33 U.S.C. 1901 *et seq.*), the United States enacted it to implement the obligations under MARPOL 73/78. The USCG is the lead agency for APPS implementation and issued implementing regulations primarily found at 33 CFR part 151. Those APPS requirements already apply to many of the vessels that would be covered by the proposed rule. Among other things, APPS regulates the discharge of oil and oily mixtures. Generally, these requirements prohibit ''any discharge of oil or oily mixtures into the sea from a ship'' except when certain conditions are met, including a discharge oil content of less than 15 ppm and that the ship operates oily-water separating equipment, an oil content monitor, a bilge alarm, or a combination thereof.

Additionally, the proposed rule would require measures during fueling, maintenance and other vessel operations to control and respond to spills and overflows, such as may occur from human error or improper equipment use. These proposed requirements reinforce existing requirements that require taking immediate and appropriate corrective actions if an oil spill is observed as a result of vessel operations. This includes maintaining appropriate spill containment and cleanup materials onboard and using such immediately in the event of any spill.

The proposed rule also includes requirements for oil-to-sea interfaces. Specifically, the proposed standard would require use of EALs for such oil-to-sea interfaces unless technically infeasible and sets out a series of mandatory BMPs for minimizing lubricant discharges during maintenance.

Oil-to-sea interfaces are seals or surfaces on ship-board equipment where the design is such that small quantities of oil can escape into the surrounding sea during normal vessel operations. For example, below-water seals frequently use lubricating oil mechanisms that maintain higher pressure than the surrounding sea to ensure that no seawater enters the system and compromises the unit's performance. During normal operation, small quantities of lubricant oil in those interfaces are released into surrounding waters. Above-deck equipment can also have oil-to-sea interfaces when portions of the machinery extend overboard, thereby allowing lubricant oil to be released directly into surrounding waters. Constituents of conventional hydraulic and lubricating oils vary by manufacturer, but may include copper, tin, aluminum, nickel, and lead. In addition, traditional mineral oils have a small biodegradation rate, a high potential for bioaccumulation and a measurable toxicity towards marine organisms. In the case of a controllable pitch propellers (CPP), up to 20 ounces of such oils could be released for every CPP blade that is replaced, with blade replacement occurring at drydock intervals or when the blade is damaged. When the blade replacement includes removal of the blade port cover (generally occurring infrequently, less than once per month), up to five gallons of oil could be discharged into surrounding waters unless the service is performed in drydock.

Additionally, many ocean-going ships operate with oil-lubricated stern tubes and use lubricating oils in much of the other machinery both on-deck and underwater. Oil leakage from stern tubes, once considered a part of normal ''operational consumption'' of oil, has become an issue of global concern and is now treated as oil pollution. A 2001 study commissioned by the European Commission DG Joint Research Centre concluded that routine unauthorized operational discharges of oil from ships into the Mediterranean Sea created more pollution than accidental spills (Pavlakis et al., 2001). Similarly, an analysis of data on oil consumption sourced from a lubricant supplier indicated that daily stern tube lubricant consumption rates for different vessels could range up to 20 liters per day (Etkin, 2010). This analysis estimated that operational discharges (including stern tube leakage) from vessels add between 36.9 million liters and 61 million liters of lubricating oil into marine port waters annually.

Vessels use lubricants in a wide variety of ship-board applications. Examples of lubricated equipment with oil-to-sea interfaces include:

- *Stern tube:* A stern tube is the casing or hole through the hull of the vessel that enables the propeller shaft to connect the vessel's engine to the propeller on the exterior of the vessel. Stern tubes contain seals designed to keep the stern tube lubricant from exiting the equipment array and being discharged to waters at the exterior of the vessel's hull.
- *Controllable pitch propeller:* Variably-pitched propeller blades are for changing the speed or direction of a vessel and supplementing the main propulsion system. Controllable pitch propellers also contain seals that prevent the lubricant from exiting the equipment array.
- *Rudder bearings:* These bearings allow a vessel's rudder to turn freely; they also use seals with an oil-to-sea interface.
- *On-deck equipment:* Hose handling cranes, hydraulic system prov cranes, hydraulic cranes, and hydraulic stern ramps are examples of machinery with the potential for above-water discharges of lubricants. When vessels are underway, this equipment is often not operational, and any lubricant losses are typically captured during deck washdown and treated as part of deck washdown wastewater. However, discharges can occur when portions of the machinery such as booms or jibs, trolleys, cables, hoist gear, or derrick arms are in use and extend over the side of vessel.

The EAL portion of the proposal provides that the EAL would need to meet three criteria; it must be ''biodegradable,'' ''minimally-toxic,'' and ''not bioaccumulative'' as defined in the proposed rule.

The proposed standard for oil-to-sea interfaces is slightly different from what was required for oil-to-sea interfaces in the VGP. EPA is proposing four changes. First, for clarity, EPA moved the EAL requirements to a general standard for oil management applicable to any specific discharge that may have an oil-to-sea interface rather than a specific discharge standard as was done in Part 2.2.9 of the VGP, and eliminated the specific discharge category, identified in Part 2.2.9 of the VGP as ''*Controllable Pitch Propeller (CPP) and Thruster Hydraulic Fluid and other Oil-to-sea Interfaces including Lubrication Discharges from Paddle Wheel Propulsion, Stern Tubes, Thruster Bearings, Stabilizers Rudder Bearings, Azimuth Thrusters, and Propulsion Pod Lubrication and Wire Rope and Mechanical Equipment Subject to Immersion.*'' The change demonstrates that the standard covers all oil-to-sea interfaces on vessels rather than just the interfaces listed in the name of that section of the VGP. EPA notes that

certain types of seals used on below-deck equipment such as air seals are based on designs that use an air gap or other mechanical features to prevent oils from reaching waters at the exterior of the vessel's hull. To the extent that these seals do not allow the lubricant to be released under normal circumstances, they are not considered to be oil-to-sea interfaces. Second, the VGP included specific criteria for demonstrating that use of an EAL was ''technically infeasible.'' Under the VIDA delineation of responsibilities between EPA and the USCG, determinations of technical infeasibility regarding the use of an EAL are most properly treated as a matter of implementation and as such, would be addressed as part of the implementing regulations to be developed by the USCG. Third, EPA made minor revisions to the wording of the standard to clarify that the scope of this discharge category extends to all types of equipment with direct oil-to-sea interfaces, including any on-deck equipment where lubricant losses can occur when portions of the machinery extend over the side of the hull. Fourth, the VGP provided two ways that a lubricant could be classified as an EAL: the EAL must be ''biodegradable,'' ''minimally-toxic,'' and ''not bioaccumulative'' as defined in the VGP; or, the EAL must be labeled under a defined list of labeling programs (*e.g.,* the European Union's European Ecolabel and Germany's Blue Angel). EPA is proposing to remove the list of acceptable labeling programs acknowledging that the requirements of these different labeling programs are established by organizations for which neither EPA nor the USCG have control over any modifications to the criteria these organizations may make to identify acceptable products for labeling. The expectation is that all or most of the labeling programs identified in the VGP meet the EAL criteria in the proposed rule and as such would provide a comparable list of options from which vessel operators could select appropriate lubricants. This provides a clear delineation of expectations for any institution interested in establishing a labeling program if that program demonstrates products that are labeled based on criteria that are at least as stringent as those in the proposed rule for biodegradability, toxicity, and bioaccumulation.

Although certification programs to label lubricants as ''environmentally acceptable lubricants'' have existed for some time, the VGP was one of the first regulatory programs to require use of EALs. Today, more than sixteen manufacturers produce EALs for the global shipping community, giving vessel operators a wide array of choices for optimizing lubricant technical performance. Most major marine equipment manufacturers have approved EALs for use in their machinery, and new equipment is being introduced commercially such as air seals, composite bearings, electric motors, and synthetic line. The market for EALs continues to expand around the world, particularly in Europe where the use of such lubricants is promoted through a combination of tax breaks, purchasing subsidies, and national and international labeling programs.

In the analysis EPA completed for the VGP, the Agency found that product substitution of EALs for other lubricants in oil-to-sea applications (unless technically infeasible) together with the required BMPs for maintenance represents BAT. As the Agency described when it issued the VGP, use of EALs in lieu of conventional formulations for oil-to-sea interfaces can offer significantly reduced discharges of pollutants of concern (U.S. EPA, 2011).

As part of the BAT analysis for the VGP, EPA considered the processes employed and potential process changes that might be necessary for vessels to use EALs. As EPA explained at the time, EALs are readily available and their use is economically achievable for most applications (U.S. EPA, 2011). New vessels in particular can select equipment during design and construction that is compatible with EALs. Furthermore, vessel operators can design additional onboard storage capacity for EALs if they choose to use traditional mineral-based oil for engine lubrication (thereby needing two types of oils on-hand). The extra storage capacity needed would be minor. EPA, however, continues to believe that the use of EALs in all applications is not practicable or achievable, therefore this proposed rule retains the provision from the VGP oil-to-sea interface requirements that allows for a claim of ''technically infeasible.''

The Agency considered several other approaches for regulating oil-to-sea interfaces in the proposed rule. For one, the most recent version of the European Ecolabel program has a modified definition of what constitutes an ''environmentally acceptable lubricant'' in that it now allows for ''small quantities'' (*i.e.,* <0.1 percent) of bioaccumulative substances in lubricant formulations. EPA considered revising the definition of ''biodegradable'' to bring the terminology more in line with current European Ecolabel requirements for a 10-day test pass window rather than a 28-day test pass window for achieving specific levels of degradation. EPA notes that stakeholders involved in the European Ecolabel program felt strongly that this change in the test pass window would significantly reduce the number of lubricant formulations available on the market. To ensure widespread installation and use of EALs by vessels that operate in the waters of the United States or the waters of the contiguous zone, EPA is retaining the definition of biodegradable as used in the VGP.

4. Training and Education

The proposed rule does not include training and education requirements. CWA Section 312(p)(5)(A)(ii)(III) requires the USCG to promulgate training and educational requirements that are not less stringent than those contained in the VGP.

B. Discharges Incidental to the Normal Operation of a Vessel—Specific Standards

This section describes the proposed national standards of performance for discharges incidental to the normal operation of a regulated vessel. The proposed national standards of performance would apply to regulated vessels operating within the waters of the United States or the waters of the contiguous zone. The proposed rule would require that a discharge comprised of two or more regulated incidental discharges must meet the national standards of performance established for each of those commingled discharges.

1. Ballast Tanks

i. Applicability

Ballast water is any water, suspended matter, and other materials taken on-board a vessel to control or maintain trim, draught, stability, or stresses of the vessel, regardless of the means by which any such water or suspended matter is carried; or during the cleaning, maintenance, or other operation of a ballast tank or ballast management system of the vessel. The term ''ballast water'' does not include any substance that is added to the water that is directly related to the operation of a properly functioning ballast water management system. As defined in the proposed standards, a ballast tank is any tank or hold on a vessel used for carrying ballast water, regardless of whether the tank or hold was designed for that purpose. Fresh water, sea water, or ice carried onboard a vessel for food safety and product quality purposes is not

considered ballast water and, as such, would not be subject to the ballast water requirements in the proposed rule. Ballast water discharge volumes and rates vary significantly by vessel type, ballast tank capacity, and type of deballasting equipment for the universe of vessels covered under the VGP and VIDA. Most passenger vessels have ballast capacities of less than 5,000 cubic meters (approximately 1.3 million gallons) of water. Cargo/container ships generally have ballast capacities of 5 to 20 thousand cubic meters (more than 1.3 to 5.3 million gallons) of water while some bulk carriers and tankers have ballast capacities greater than 40 thousand cubic meters (over 10 million gallons) of water.

Ballast water may contain toxic and nonconventional pollutants such as rust inhibitors, epoxy coating materials, zinc or aluminum (from anodes), iron, nickel, copper, bronze, silver, and other material or sediment from inside the tanks, pipes, or other machinery. More importantly, ballast water may also contain marine and freshwater organisms that originate from where the water is collected. When ballast water is discharged, these organisms may establish new populations of ANS in the receiving waterbodies. Ballast water discharged from vessels has been, and continues to be, a significant environmental concern because it can introduce and spread ANS that threaten the diversity and abundance of native species, threaten the ecological stability of our Nation's waters, and threaten the commercial, agricultural, aquacultural, and recreational use of those waters.

Currently, ballast water discharges are regulated by multiple federal and state laws and regulations. The USCG regulates ballast water discharges under the Nonindigenous Aquatic Nuisance Prevention and Control Act of 1990 (NANPCA), and amendments thereto by the National Invasive Species Act (NISA) of 1996 (33 CFR part 151 subparts C and D). Starting in 2009, EPA regulated ballast water discharges under the NPDES program authorized under CWA Section 402; however, the VIDA requires that ballast water be regulated as an incidental discharge under CWA Section 312. The VIDA set as a minimum baseline the VGP/NPDES requirements previously developed under CWA Section 402. Additionally, several states (California, Michigan, Minnesota, Ohio, Oregon, Washington, and Wisconsin) previously used their certification authorities under CWA Section 401 or under stand-alone state authorities to impose additional, state-specific requirements that would apply to commercial vessels operating within their state waters. Such additional stand-alone State standards will no longer be permissible under the VIDA once EPA has established national standards and the USCG has promulgated implementing regulations that are final, effective, and enforceable. [33 U.S.C. 1322(p)(9)(A)(i)].

The proposed standards for ballast water reflect BAT and consider the previous requirements established in the 2013 VGP and 33 CFR part 151 subparts C and D, the BAT factors as specified in Section 304(b) of the Clean Water Act, as well as the new requirements established in the VIDA. The analysis described herein is based largely on information gathered and included in the public docket for this proposed rulemaking and includes information on the United States and international requirements surrounding ballast water discharges and the candidate control technologies (both best management practices and treatment technologies).

ii. Exclusions

The proposed standards for ballast water apply to any vessel equipped with one or more ballast tanks that operates in the waters of the United States or waters of the contiguous zone, except as excluded by statute or regulation. Pursuant to the VIDA in CWA Section 312(p)(2)(B)(ii), the proposed rule would exclude the following five discharges from the CWA Section 312(p) ballast water standards.

A. Vessels That Continuously Take on and Discharge Ballast Water in a Flow-Through System

The proposed rule would exclude discharges of ballast water from a vessel that continuously takes on and discharges ballast water in a flow-through system, if the Administrator determines that the system cannot materially contribute to the spread or introduction of an ANS from ballast water into waters of the United States or the contiguous zone, acknowledging that such a flow-through system may have additional areas on the hull (*e.g.,* niches) requiring more rigorous biofouling management. EPA is unaware of any such vessels currently in commercial operation, but theoretically a vessel could be designed to have ambient water flow through the hull for vessel stability without retaining any of that water in such a way that it would be transported. Should any such vessel begin commercial operation, EPA expects that it would evaluate the ballasting configuration to determine if the vessel meets the statutory description, in which case it would be excluded from the ballast water discharge standards. In that instance, the Administrator would notify the vessel owner or operator of such a determination. [33 U.S.C. 1322(p)(2)(B)(ii)(I)]

B. Vessels in the National Defense Reserve Fleet Scheduled for Disposal

The proposed rule would exclude discharges of ballast water from a vessel that is in the National Defense Reserve Fleet that is scheduled for disposal, if the vessel does not have an operable ballast water management system.

C. Vessels Discharging Ballast Water Consisting Solely of Water Meeting the Safe Drinking Water Act Requirements

The existing USCG regulations (33 CFR 151.2025) allow vessels to use, as ballast water, water from a U.S. public water system (PWS), as defined in 40 CFR 141.2, that meets the requirements of the Safe Drinking Water Act (SDWA) at 40 CFR parts 141 and 143. In plain terms, this means finished, potable water as opposed to untreated water that is owned or operated by a PWS but not necessarily potable. Those USCG regulations specify that vessels using water from a PWS as ballast must maintain a record of which PWS they received the water from as well as a receipt, invoice, or other documentation from the PWS indicating that water came from that system. Furthermore, vessels must certify that the ballast tanks have either previously cleaned (including removing all residual sediments) and not subsequently introduced ambient water, or never introduced ambient water to those tanks and supply lines. The existing EPA requirements in the VGP similarly allow vessels to use water, not only from a U.S. public water system, but also from a Canadian drinking water system, as defined in Health Canada's Guidelines for Canadian Drinking Water Quality.

As specified by Congress in the VIDA, the proposed rule would exclude a vessel that discharges ballast water consisting solely of water taken onboard from a public or commercial source that, at the time the water is taken onboard, meets the applicable requirements of the Safe Drinking Water Act (SDWA) (42 U.S.C. 300f *et seq.*) at 40 CFR parts 141 and 143. As provided in the existing VGP, EPA proposes that this exclusion also applies to water taken on board that meets Health Canada's Guidelines for Canadian Drinking Water Quality because EPA has evaluated these Guidelines and found them to be consistent with the applicable requirements of the SDWA. Canada's drinking water treatment processes

require a high degree of disinfection and, in many cases filtration, which would make the likelihood of loading ANS into a vessel's ballast tank highly unlikely. Further, as under existing requirements, EPA proposes that this exclusion applies only if the ballast tanks have either been previously cleaned (including removing all residual sediments) and not subsequently loaded with ambient water; or, if the ambient water has never been introduced to the ballast tanks and supply lines. Note that EPA considered whether use of a potable water generator installed onboard the vessel should be covered under this exclusion; however, pursuant to CWA Section 312(p), this exclusion is only available to ballast water that is taken onboard from a public or commercial source that is compliant with SDWA requirements at the time it is taken aboard the vessel (U.S. EPA, 2015).

D. Vessels Carrying All Permanent Ballast Water in Sealed Tanks

The proposed rule would exclude discharges of ballast water from a vessel that carries all permanent ballast water in sealed tanks that are not subject to discharge. This exclusion is consistent with the previous requirements of the VGP and was specified by Congress under the VIDA.

This exclusion is different from the proposed ballast water exchange and saltwater flushing exemptions (described in VIII.B.1.ix. *Ballast Water Exchange and Saltwater Flushing*) for ballast contained in sealed tanks, which EPA proposes to be for ballast tanks that are not permanently sealed.

E. Vessels Discharging Ballast Water Into a Reception Facility

The proposed rule would exclude discharges of ballast water from a vessel that only discharges ballast water into a reception facility (which could include another vessel for the purpose of storing or treating that ballast water). This exclusion would carry forward the existing VGP requirements and USCG regulation (33 CFR 151.2025) that allow discharges to a reception facility as an eligible ballast water management method. In such instances, once the ballast water is offloaded to a reception facility, that ballast water would be subject to regulation if discharged from that facility. Consistent with the rationale provided in the VGP fact sheet, EPA would continue to expect that all vessel piping and supporting infrastructure up to the last manifold or valve immediately before the reception facility manifold connection, or similar appurtenance, prevent untreated ballast water from being discharged. Any such discharge not meeting this requirement would be expected to meet the discharge standards in the proposed rule.

iii. Exclusion Not Continued From Existing USCG Regulations for Crude Oil Tankers

Crude oil tankers engaged in coastwise trade are excluded from the existing USCG regulation (33 CFR 151.2015(b)), consistent with Section 1101(c)(2)(L) of the National Invasive Species Act of 1996 (16 U.S.C. 4711). However, these same vessels are not excluded from meeting the ballast water requirements in the VGP and are not exempted under the VIDA. Therefore, pursuant to CWA Section 312(p)(4)(B)(iii), which requires this proposed rule to be at least as stringent than specified parts of the VGP, EPA proposes that crude oil tankers engaged in coastwise trade not be excluded from meeting the ballast water requirements set forth in the proposed rule. Such vessels are not inherently unable to perform ballast water exchanges and other ANS management practices that their currently non-exempt counterparts routinely carry out. EPA expects this proposal to impose no additional costs given that the requirements are presently in effect under the VGP.

iv. Ballast Water Best Management Practices (BMPs)

Pursuant to CWA Section 312(p)(4)(B)(ii), EPA is proposing BMPs to control or abate ballast water discharges from all vessels equipped with ballast tanks. Following the requirement of the VIDA that EPA requirements must not be less stringent than the VGP unless a less stringent requirement is justified, EPA proposes to retain many of the BMPs in the VGP as they were designed to reduce the number of living organisms taken up and discharged in ballast water. At present, these BMPs are widely followed and implemented, thus technologically available and economically achievable. They have no unacceptable non-water quality environmental impacts (*e.g.,* energy requirements, air impacts, solid waste impacts, and changes in waters use). They are proposed to be carried forward from both the existing EPA requirements in the VGP and USCG regulations (33 CFR part 151 subpart D). Discussion of BMPs not proposed to be carried forward from the VGP and USCG regulations is included in VIII.B.1.iv.H. *Best Management Practices Not Continued from Existing Requirements.* The proposed BMPs are described below.

A. Clean Ballast Tanks Regularly

As required under the VGP and USCG regulations, the proposed rule would require ballast tanks to be flushed regularly and cleaned thoroughly at every scheduled drydock to remove sediment and biofouling organisms. Residual sediment left in ballast tanks can negatively affect the ability of a vessel to meet discharge standards, even when a ballast water management system (BWMS) is properly operated and maintained. Such sediments may pose a risk of spreading ANS as organisms can survive in ballast sediment for prolonged periods of time in resting stages.

B. Use High Sea Suction

Consistent with EPA requirements under the VGP, the proposed rule would require that, when practicable and available, high sea suction sea chests must be used when at a port or where clearance to the bottom of the waterbody is less than 5 meters to the lower edge of the sea chest. As an example of when use of high sea suction may not be practicable is to avoid ice or algae, or other biofilm on the water surface. This BMP minimizes the potential for uptake of bottom-dwelling organisms, suspended solids, particulate organic carbon, and turbidity into the ballast tanks.

C. Use Ballast Water Pumps When in a Port

As previously required under the VGP, the proposed rule would require that when practicable, ballast water must be discharged in port using pumps rather than using gravity to drain tanks. This BMP has been shown to increase the mortality rate of living organisms in the ballast water during discharge, particularly zooplankton and other larger organisms, that would otherwise be discharged, given the physical action of the pumps (*e.g.,* cavitation, entrainment, and/or impingement).

D. Maintain Sea Chest Screens

The proposed rule would require that the sea chest screen(s) must be maintained and fully intact. This BMP is consistent with an EPA requirement under the VGP for existing bulk carriers operating exclusively in the Laurentian Great Lakes, also known as ''Lakers,'' but EPA proposes to expand it to all vessels with ballast tanks. These screens are designed to keep the largest living organisms, such as fish, as well as bacteria and viruses associated with these organisms, out of ballast tanks.

This BMP may reduce the risk of spreading ANS. Adequately maintaining sea chest screens is a simple technology-based practice that is available, economically achievable, and beneficial to all vessels to reduce the threat of ANS dispersal.

E. Prohibit Ballast Tank Cleaning Discharges

As described above, the proposed rule would require ballast tanks to be periodically flushed and cleaned to remove sediment and biofouling organisms; however, the proposed rule also would prohibit the discharge of residual sediment or water from ballast tank cleanings. Rather, these wastes should be disposed of in accordance with any applicable local, state, and federal regulations, which are outside of the scope of this proposed rule.

F. Avoid Ballast Water Discharge or Uptake in Areas With Coral Reefs

The proposed rule would require vessel owners and operators to avoid the discharge or uptake of ballast water in areas with coral reefs. This BMP is consistent with the VGP requirements. The VGP also included similar prohibitions for ''marine sanctuaries, marine preserves, marine parks, . . . or other waters'' listed in Appendix G. The proposed rule also would prohibit the discharge and uptake of ballast water in those areas but under a separate section of the proposed rule specific to activities in federally-protected waters as described in VIII.B.1.xiii. *Additional Considerations in Federally-Protected Waters.*

Further, consistent with a USCG Marine Safety Information Bulletin (*Ballast Water Best Management Practices to Reduce the Likelihood of Transporting Pathogens That May Spread Stony Coral Tissue Loss Disease;* Marine Safety Information Bulletin, OES–MSIB Number: 07–19, September 6, 2019), ballast water discharges should be conducted as far from coral reefs as possible, regardless of whether the reef is inside or outside of 12 NM from shore (USCG, 2019a).

EPA is seeking input for the development of the final rule regarding: (1) How best to define areas with coral reefs, and (2) public availability of navigational charts that can be used for identifying areas with coral reefs.

G. Develop a Ballast Water Management Plan

Like the previous requirements of the VGP and the USCG regulations, the proposed rule would require that any vessel with one or more ballast tanks develop and follow a vessel-specific ballast water management plan (BWMP) to minimize the potential for the introduction and spread of ANS. Such a BWMP should employ a holistic strategy that considers the operational profile of the vessel and the appropriate ballast water management practices and systems. Details of such a plan will be detailed in the corresponding implementation regulation to be promulgated by the Secretary as specified in section 139.1(e) of the proposed rule.

H. Best Management Practices Not Continued From Existing Requirements

The proposed rule would not include one BMP that is currently included as a measure in both the VGP and USCG regulations at 33 CFR part 151 subparts C and D. These practices were adopted from the voluntary ''Code of Best Practices for Ballast Water Management'' of the Shipping Federation of Canada dated September 28, 2000, for vessels operating in the Great Lakes and St. Lawrence Seaway and codified in the VGP and USCG regulations (Shipping Federal of Canada, 2000).

EPA proposes not to continue the requirement that vessel operators must minimize or avoid uptake of ballast water in the following areas and situations:

- Areas known to have infestations or populations of harmful organisms and pathogens (*e.g.,* toxic algal blooms);
- Areas near sewage outfalls;
- Areas near dredging operations;
- Areas where tidal flushing is known to be poor or times when a tidal stream is known to be turbid;
- In darkness, when bottom-dwelling organisms may rise in the water column
- Where propellers may stir up the sediment; and
- Areas with pods of whales, convergence zones, and boundaries of major currents.

The proposed deletion is based on the finding that such measures are not practical to implement. These conditions are usually beyond the control of the vessel operator during the uptake and discharge of ballast water and thus it is not an available measure or practice to minimize or avoid uptake of ballast water in those areas and situations. 33 U.S.C. 1314(b)(2)(B). In lieu of these measures, the VIDA and the proposed rule contain several provisions that can help address some of the situations identified above. For example, in cases of a known outbreak of harmful algal blooms or viral hemorrhagic septicemia, a state can submit a petition to EPA or the USCG requesting EPA to issue an emergency order as provided for in CWA Section 312(p)(7)(A)(i). The emergency order provision in the VIDA acknowledges that when a water quality or invasive species issue is identified in a geographic area, EPA will identify appropriate BMPs to address that concern and impose specific requirements on the universe of vessels (and potentially others) as necessary. 33 U.S.C. 1322(p)(4)(E)(i).

v. Numeric Ballast Water Discharge Standard

Pursuant to CWA Section 312(p)(4)(B)(iii), the proposed rule would continue, as a numeric discharge standard, the numeric discharge limitations previously contained in the VGP, to include:

- For organisms greater than or equal to 50 micrometers in minimum dimension: Discharge must include less than 10 living organisms per cubic meter of ballast water.
- For organisms less than 50 micrometers and greater than or equal to 10 micrometers: Discharge must include less than 10 living organisms per milliliter (mL) of ballast water.
- Indicator microorganisms must not exceed:
  - Toxicogenic *Vibrio cholerae* (serotypes O1 and O139): A concentration of less than 1 colony forming unit (cfu) per 100 mL.
  - *Escherichia coli:* A concentration of less than 250 cfu per 100 mL.
  - Intestinal enterococci: A concentration of less than 100 cfu per 100 mL.

The proposed rule would define ''living'' using the CWA Section 312(p)(6)(D) clarification that the terms 'live' and 'living' shall not include an organism that has been rendered nonviable; or preclude the consideration of any method of measuring the concentration of organisms in ballast water that are capable of reproduction. However, it is important to recognize that as of the time of the proposed rule, the USCG has not identified any testing protocols, based on best available science, that are available for use to quantify nonviable organisms in ballast water. As such, compliance with the proposed discharge standard requires the use of test methods as detailed in the 2010 EPA *Generic Protocol for the Verification of Ballast Water Treatment Technology* that do not consider non-viable organisms as part of the test protocol. Should the USCG identify one or more testing protocols that enumerate nonviable organisms, such methods would be acceptable for demonstrating compliance with the proposed numeric

ballast water discharge standard (U.S. EPA, 2010).

In addition, the proposed rule would continue the numeric discharge limitations as a numeric standard for four biocide parameters contained in the VGP, namely:

- For any BWMS using chlorine dioxide, the chlorine dioxide must not exceed 200 µg/L;
- For any BWMS using chlorine or ozone, the total residual oxidizers must not exceed 100 µg/L; and
- For any BWMS using peracetic acid, the peracetic acid must not exceed 500 µg/L and the hydrogen peroxide must not exceed 1,000 µg/L.

The standard for both the organisms and biocide parameters represents instantaneous maximum values not to be exceeded.

The proposed rule would continue the requirement contained in the VGP and USCG regulations at 33 CFR part 151 that, prior to the compliance date for the vessel to meet the discharge standard, ballast water exchange must be conducted as required in section 139.10(e) of the proposed rule, or the applicable regional requirements in sections 139.10(f) and 139.10(g) of the proposed rule, for any vessel subject to the ballast water discharge standard. As directed in the VIDA, the USCG will include requirements regarding compliance dates in its proposed regulation. 33 U.S.C. 1322(p)(5)(A)(iv).

A. BAT Rationale for Standard Pursuant to VIDA

1. Types of Ballast Water Management Systems Determined To Represent BAT

The treatment technologies used for ballast water management representing BAT typically have three processes: Physical separation, disinfection, and neutralization. For physical separation, filtration is used most often as a pre-treatment by removing large organisms and particles (down to about 40–50 µm) from ballast water. Filtration improves the efficiency of subsequent disinfection processes by lowering the amount of chemicals or ultraviolet (UV) light needed. Filtration is also important for chemical disinfection because chemicals are relatively ineffective against organisms buried in sediment, especially invertebrates in resting stages (U.S. EPA, 2011a).

Disinfection is the effect of a chemical (*e.g.,* an oxidant) or physical action (*e.g.,* UV irradiation, heat, shear force, etc) that kills organisms or renders them no longer able to reproduce. The types of disinfection processes of a BWMS broadly includes UV radiation, electrochlorination, chemical addition, ozonation, heat and deoxygenation. Disinfection using UV radiation is currently the most common disinfection technology used in BWMS and is typically combined with filtration during ballasting. The UV light is emitted from a mercury arc lamp, and the rays transfer electromagnetic energy through the organism's cell membrane to chemically alter DNA in its nucleus which kills the organism or terminates its ability to reproduce. A UV-based BWMS often includes a second round of UV treatment when deballasting.

Electrochlorination (or electrolysis) systems are the second most common type of disinfection system used to treat ballast water. Electrochlorination creates hypochlorous acid, the active substance, by running an electric current through saltwater. The two primary requirements for treatment are a minimum salinity in the ambient water for the reaction to occur and a power source with direct current to run the electrolyzer. Two design options for electrochlorination systems are used in BWMS: In-line and side-stream treatment. Both systems undergo the same chemical reaction in an electrolyzer but vary in the concentrations of active substance created and in the volume of water dosed. Chemical addition (*e.g.,* liquid sodium hypochlorite), ozonation, and deoxygenation are other types of ballast water disinfection technologies that have been developed and type-approved; although, use of these systems is far less common than UV and electrochlorination systems.

Neutralization is the addition of a neutralizing agent that reacts with excess disinfection chemicals to eliminate their toxicity at discharge. Neutralization is an important step in chemical ballast water treatment to avoid excess chemicals, residual oxidizers, and disinfection by-products from entering and impairing the water at the point of discharge. As required in the 2013 VGP, the proposed rule includes a numeric standard for residual biocides which can be met through neutralization of treated ballast water.

2. Justification for the Numeric Ballast Water Discharge Standard

i. Type-Approval of Ballast Water Management Systems is a Well-Established and Demonstrated Process for Selection of Technologies

As a preliminary matter, EPA notes that the establishment of a ballast water discharge standard for vessels (both domestic and international) using technology based criteria pursuant to the CWA poses challenges that are not present for stationary facilities for which EPA routinely establishes national discharge effluent limitations guidelines and standards based on BAT under the effluent limitation guidelines program. Importantly, it is impractical to conduct routine monitoring and analysis of the discharged ballast water from vessels to assess the ability of an installed BWMS onboard a ship to meet the numerical discharge standard for biological parameters. Rather, the biological efficacy of any BWMS is best demonstrated through a series of land-based and shipboard trials performed specific to each BWMS. Such a system, when selected, installed, and operated consistent with the manufacturer's specifications, as tested in those land-based and shipboard trials, and ''type-approved'' by an Administration (*i.e.,* the federal agency responsible for approvals) is then expected to meet the discharge standard for biological parameters in the proposed rule.

The BWMS type-approval process was first developed as part of the IMO International Convention for the Control and Management of Ships' Ballast Water and Sediments (*i.e.,* the BWM Convention), an international treaty developed with a goal of establishing an international standard for the management of ballast water (IMO, 2004). The BWM Convention was adopted in 2004 after more than 14 years of complex negotiations between IMO member states and entered into force in 2017, 12 months after ratification of the BWM Convention by a minimum of 30 member states, representing at least 35 percent of world merchant shipping tonnage. Regulation D–2 of that BWM Convention established the ballast water discharge performance standard as follows:

- Organisms greater than or equal to 50 micrometers in minimum dimension—less than 10 viable organisms per cubic meter;
- Organisms less than 50 micrometers in minimum dimension and greater than or equal to 10 micrometers in minimum dimension—less than 10 viable organisms per milliliter;
- Indicator microbes:
  - Toxicogenic *Vibrio cholerae* (O1 and O139): Less than 1 colony forming unit (cfu) per 100 milliliters or less than 1 cfu per gram (wet weight) zooplankton samples;
  - *Escherichia coli:* Less than 250 cfu per 100 milliliters; and
  - Intestinal enterococci: Less than 100 cfu per 100 milliliters.

Regulation D–3 requires that any BWMS used to meet the standard be approved in accordance with specific IMO procedures, which had initially

been adopted as guidelines (Guidelines for Approval of Ballast Water Management Systems, or more commonly referred to as ''G8'' for being the eighth in a series of BWM Convention guidelines) but subsequently adopted into the BWM Convention as mandatory (IMO, 2008; IMO, 2016). The approval process includes detailed requirements for BWMS vendors to submit BWMS for both land-based and shipboard testing by independent third-party test facilities to demonstrate that the BWMS can meet the D–2 standard following technical specifications detailed in the *Code for Approval of Ballast Water Management Systems (BWMS Code, Resolution MEPC.300(72; 13 April 2018, effective October 13, 2019)* (IMO, 2018a). Upon a successful demonstration that a BWMS can meet the D–2 standard, such a system is approved (''type-approved'') for use onboard a ship. Adoption of the BWM Convention in 2004 prompted development of ballast water management systems (BWMS) that could demonstrate compliance with the D–2 standard. In this approach, unlike how EPA develops effluent limitations guidelines and standards based on demonstrated treatment system effectiveness, the BWM Convention establishes a standard, then vendors develop systems to be demonstrated and approved as meeting that standard. As of October 2019, the IMO recognizes 80 BWMS approved by one or more administrations as capable of meeting the D–2 standard (IMO, 2019).

While the United States is not party to the BWM Convention, the USCG developed domestic regulations with the intent to harmonize as closely as possible with the adopted BWM Convention, and established a discharge standard to be met using a BWMS that has been demonstrated as capable of meeting that standard through a USCG type-approval process. Criteria for the USCG type-approval are detailed in regulations at 46 CFR 162.060, *Ballast Water Management Systems* and address BWMS design, installation, operation, and testing to ensure any type-approved system meets both performance and safety standards. The USCG type-approval testing requirements were widely accepted as having been more complex and rigorous than those of the IMO (although this is not necessarily still the case since adoption of the BWMS Code). The USCG regulations provide for temporary use of foreign type-approved BWMS in the United States for up to five years after the vessel is required to comply with the ballast water discharge standard.

Type-approval is a critical step in verifying that a BWMS, when tested under standardized and relatively challenging conditions, is capable of consistently meeting the discharge standard. In the USCG type-approval testing process to determine biological efficacy, careful analyses are employed to (1) assure the source water for testing meets a threshold concentration of organisms to meaningfully challenge the BWMS, and (2) to quantify (ideally, sparse) concentrations of living organisms in treated and untreated (*i.e.,* control) discharge water. As part of its type-approval procedure, the USCG regulations require BWMS land-based testing to be conducted pursuant to the ETV Protocol (*i.e.,* the 2010 *Generic Protocol for the Verification of Ballast Water Treatment Technology,* developed under the now defunct EPA Environmental Technology Verification Program) that outlined the experimental design, sampling and analysis protocols, test, and reporting requirements (U.S. EPA, 2010).

The USCG type-approval process contrasts with the typical approach when EPA develops a numeric discharge effluent limitations guideline or standard under the effluent limitation guidelines program. There, EPA does not also specify the technology that must be used; rather, EPA identifies one or more technologies that have been demonstrated as being capable of meeting the discharge standard and the discharger selects one of those technologies. EPA typically establishes numeric effluent discharge limits based on a daily maximum and long-term (*i.e.,* monthly) average to reflect pollution control that reflects BAT, including accounting for variability at well-operated systems. Compliance with such effluent limits is demonstrated through routine self-monitoring by the discharger. Because of the challenges with collecting and testing representative samples of ballast water at the time of discharge, regulating discharged ballast water sourced from around the world has required a different approach. Namely, EPA adopted the USCG and IMO approach over the last decade by not only setting the numeric discharge limitations, but also specifying the technologies deemed to meet the limitations through the type-approval process. Currently, for vessels operating in waters of the United States and contiguous zones, compliance with the key biological parameters (*i.e.,* organisms in the 10–50 microns and greater than 50 microns ranges) is achieved largely through demonstrating that any installed BWMS is operated and maintained consistent with the criteria under which that system received USCG type-approval, acknowledging that discharges are required to meet the discharge standard as well.

The proposed ballast water discharge standard reflects EPA's BAT analysis that any USCG type-approved BWMS kill, render harmless, or remove living organisms from ballast water. These approved technologies have been demonstrated to achieve the existing requirements, and therefore are technologically available; for the reasons set out in the 2013 VGP Fact Sheet, they are also economically achievable and have no unacceptable non-water quality environmental impacts. The USCG type-approved its first BWMS in 2016 and to date, more than two dozen systems have received USCG type-approval (USCG, 2019).

ii. International Nature of Vessel Operations Dictates Consideration of IMO Discharge Standard

When developing the VGP, EPA established the numeric ballast water effluent limits equivalent to the standard in the USCG regulations (33 CFR 151.1511 and 151.2030) and generally consistent with the BWM Convention. In establishing those effluent limits, EPA demonstrated it was critical to consider that BWM Convention. As described above, the United States is not a party to the BWM Convention; however, both the USCG (serving as the lead for the U.S. delegation) and EPA were actively involved in the standard setting discussions that led to the BWM Convention numeric discharge standard which entered into force in September 2017. Worldwide, it is estimated that approximately 34,000–70,000 commercial vessels are required to meet a ballast water discharge standard (IMO, 2016a; King and Hagan, 2013). Vessels from IMO member countries that have signed onto the BWM Convention are required to comply with both the BWM Convention and U.S. ballast water regulations when operating in U.S. waters. Similarly, U.S.-flagged vessels must meet the BWM Convention requirements when operating in any countries that are a signatory of that BWM Convention (*e.g.,* a U.S.-flagged vessel will be required to comply with Canadian regulations developed pursuant to the BWM Convention when in Canadian waters).

Based on the most recent five years of VGP annual reports submitted to EPA, over 75 percent of vessels discharging ballast water spent 25 percent or less of

their time (and nearly 60 percent of those vessels that discharged ballast water spent less than 10 percent of their time) operating in waters of the United States or waters of the contiguous zone (U.S. EPA, 2020). As of October 31, 2019, 81 IMO member countries representing more than 80 percent of the world merchant fleet by tonnage have ratified the BWM Convention, thus requiring vessels either flying the flag of those countries or operating in those countries to comply with that BWM Convention (IMO, 2020). Thus, vessels comprising 80 percent of the world merchant fleet by tonnage are obligated to comply with the BWM Convention anywhere they operate in the world, including while operating in the United States. The movement of vessels through international waters, the need to comply with any international pollution control standard, and the great variability in source water quality among all the ports where vessels operate presents process and engineering challenges that are unique to the vessel community. This is particularly true of BWMS where the physical scale of such systems relative to the vessels themselves often makes it impossible to accommodate redundant systems or potentially even two different systems to be used depending on where the vessel may be ballasting. These practical challenges relate to the technical availability of such requirements where the relationship between U.S. and other international requirements may limit the ability of the vessel to select and install technologies capable of complying with multiple sets of requirements where that vessel is intending to voyage. With that in mind, it is important that EPA considers the implications for the entire universe of vessels that may operate in waters of the U.S. and waters of the contiguous zone. So, while the U.S. requirements do not have to be identical to the BWM Convention, it is important that, to the extent possible, U.S. requirements do not conflict with international obligations for the vessels of flag states that have signed onto that BWM Convention.

In 2015, in *Nat. Res. Def. Council, et al.* v. *U.S. Envtl. Prot. Agency, et al.,* 808 F.3d 556 (2d Cir. 2015), the United States Court of Appeals for the Second Circuit found, among other things, that EPA acted arbitrarily and capriciously in the 2013 VGP because EPA failed to address why it did not select technologies that could have resulted in a more stringent limitation than the technologies underlying the IMO Standard. The court stated that there are shipboard technologies capable of surpassing the international standard and that EPA failed to demonstrate why limits based on these technologies were not considered. The information cited by the court is the 2011 Science Advisory Board (SAB) report that showed that nine BWMS representing five types of systems had data generated during their IMO type-approval testing demonstrating that these systems can meet a standard between the IMO/USCG standard and 10 times the standard for one or more organism sizes (U.S. EPA, 2011b).

Establishing a discharge standard necessarily based on the most stringent of type-approved systems, as implied by the court's decision, is not required where mitigated by one of the factors relevant to BAT under CWA Section 304(b), therefore EPA does not believe the Second Circuit's decision must dictate the outcome of the agency's analysis. As discussed above, the BAT factors, particularly with respect to process considerations and engineering challenges, weigh in favor of maintaining the proposed ballast water standard at a level of consistency with the IMO standard. This is not to say that U.S. requirements must or should always be identical with the international standard. However, particularly for ballast water discharges, which are frequently significant in scale and expensive to control and which are intrinsic to the long-distance movement of vessels through international waters, EPA places value on being consistent with international obligations, when reasonably possible, in establishing BAT. Here, it is neither reasonable nor appropriate for the universe of vessels that would be regulated under the proposed ballast water discharge standard to not consider the international obligations for those vessels. The current world economic and trade system is predicated on timely and efficient maritime transportation, a significant proportion of which operates globally where trade takes it. Many of the vessels that are subject to the U.S. discharge standard spend most of their time outside of waters of the United States and waters of the contiguous zone, are operating under international ballast water obligations, which for the most part is the IMO standard established in the BWM Convention.

The record for this proposed rulemaking demonstrates that the proposed standard reflects BAT in that the current technology, USCG type-approved BWMS, are technologically available, safe, effective, reliable, and commercially available for shipboard installation. Also, the record indicates that their use is economically achievable. These technologies have been shown (*i.e.,* through shipboard type approval testing) to substantially reduce the concentration of living organisms in ballast water discharges (and achieve the IMO and USCG/EPA discharge standards) compared to mid-ocean exchange or discharges of unexchanged ballast water.

iii. Proposed Standard Accounts for Multiple Sources of Variability

The proposed standard successfully accounts for various sources of variability inherent in addressing ANS in ballast water, including:

- Vessel size, operational profile (*e.g.,* voyage lengths, volumes of ballast water, ballast water flow rates, etc.) and class and flag state;
- Ballast water management system (BWMS) performance in diverse environments; and
- Discharge monitoring (*i.e.,* sampling and analysis).

This variability in addressing ANS dictates that different BWMS options are needed to account for differences in vessels such as different voyage patterns (in marine, brackish, or fresh waters), ballasting rates, architectural characteristics of the vessel such as space constraints or the need to locate the BWMS in a hazardous location onboard the vessel, and BWMS vendor support availability at locations around the world where that vessel intends to voyage. That is, a BWMS that is technically and operationally appropriate for one vessel may not be so appropriate for a different vessel, or even a similar vessel with a different operating profile. EPA analysis for the proposed rule is based on a similar determination that a wide range of available systems is necessary to accommodate technical and operational differences of varying vessel types, sizes, operating profiles, classes and flag states. The existing discharge standard has promoted through the type-approval process a range of types of BWMS disinfection technologies (including UV, electrochlorination, chemical addition, ozonation, and deoxygenation) that operate under a wide range of conditions allowing vessel operators to select a system that is most appropriate for that vessel, considering factors such as:

- The vessel's ballast tank(s), pump(s), and piping configuration;
- Temperature, salinity, and turbidity range of uptake water in areas where the vessel voyages;
- Duration of voyages and segments of each voyage that can affect the

necessary holding time for certain systems;

- Ballast water capacity and required uptake and discharge pumping rates;
- Treatment system weight and space considerations, including accessibility and acceptability for use in hazardous spaces;
- Availability of service, support, replacement parts, supplies, etc. in areas where the vessel voyages;
- Compatibility of treatment with vessel construction (*e.g.,* corrosivity concerns);
- Power demand and energy consumption to pump ballast and operate treatment system; and
- Safety concerns (*e.g.,* explosivity risks, particularly on oil and chemical carriers).

Certain systems may be more advantageous for certain types of vessels. For example, the choice of many shipowners may be limited to UV systems as compared to chemical-based systems for those vessels that operate in ports around the world that ban or impose very low discharge limits on certain hazardous chemicals (*i.e.,* treatment chemicals) used by certain BWMS. In addition, it may be difficult or impossible for a vessel operator to obtain specific chemicals for certain BWMS in certain ports around the world. Similarly, a vessel owner may choose a chemical-based system because they do not have the electrical generation capacity (or room to add such capacity) onboard to support a UV system. Shipowners' decisions may also be based on the ease of operational and maintenance requirements. As such, it is critical that a range of BWMS be available to the global shipping industry to reduce ANS discharge under a variety of operational and environmental conditions.

Variability is inherent to all well-operated treatment systems. When EPA establishes BAT, it must consider the variability at a well-operated treatment system to ensure that the standard is technologically available. EPA's approach to providing for some variability for well-operated systems in establishing BAT limits in effluent limitations guidelines rulemakings has been upheld by the courts several times. See for example, *Nat'l Wildlife Fed'n* v. *U.S. Envtl. Prot. Agency,* 286 F.3d 554, 572 (D.C. Cir. 2002), which upheld EPA's decision to set the monthly average at the 95th percentile by stating that EPA has considerable discretion in determining a technical approach that will ensure that the effluent limitations reasonably account for the expected variability in plant operations while still maintaining an effective level of control. See also *Chemical Mfrs. Ass'n* v. *EPA,* 870 F.2d 177, 229 (5th Cir. 1989), where it is upheld that the purpose of these variability factors is to account for routine fluctuations that occur in plant operation, not to allow poor performance. As is typically the case in the effluent guidelines program, operators design pollution control systems to achieve results below the discharge standard on a long-term basis to account for normal variability at well-operated systems.

The goal of the USCG type-approval process is to demonstrate that a BWMS can treat ballast water such that organism concentrations in discharged water are sufficiently low to meet the discharge standard (*e.g.,* less than 10 organisms per cubic meter of ballast water as an instantaneous maximum) for a given number of consecutive valid tests. The individual test results are reflective of the conditions of the water quality at the land-based and ship-based testing facility at the time. The type-approval process acknowledges that there will be variability in how systems are tested but establishes an instantaneous maximum value to verify BWMS performance using a set of challenging, but not rare, water quality conditions representative of the natural environment. Comparing type-approval data for different systems would only be appropriate if all other variables were held constant or under complete control during the test. However, that is not the case. For example, as required in the USCG type-approval process, shipboard testing occurs on systems for a period of six months in the locations where that vessel voyages during that time period, regardless of where else that vessel has voyaged or plans to voyage in the future. As such, the test results illustrate that BWMS manufacturers are having systems tested in a variety of environmental conditions and locations around the world, all with the goal of demonstrating that the BWMS can consistently meet, not necessarily exceed, the IMO discharge standard. Demonstrating a system can achieve this discharge standard regardless of the environmental factors is the standard by which the USCG evaluates these systems. [46 CFR 162.060–10(f)(2)]. To do otherwise is to unfairly favor systems that may have had more favorable test conditions.

Multiple sources of variability exist in type-approval sampling and analysis that also affects the results of type-approval testing. For example, stratification in ballast tanks, variability between tanks, flow rates, and contamination in uptake and discharge pipes are just a few of the considerations that may impact type-approval testing. It is also a challenge to capture and count appropriately sized organisms and to collect samples such that the sample collection process does not physically damage or kill these organisms (which should be counted as dead or nonviable only if such happens as a result of the BWMS, not because of poor sample collection and handling practices). Currently, the ETV Protocol is an EPA and USCG accepted method to evaluate the performance characteristics of commercial-ready BWMS regarding factors such as biological treatment performance, predictability/reliability, cost, environmental acceptability, and safety. Based on the ETV Protocol, the determination of the concentration of living organisms in treated water is done through manual microscope counts by trained microscopists.

The sources of uncertainty are systematic error, which is the loss of organisms during sampling and processing, which can be substantial, and random error, which is the difference in organism counts among analysts and among replicate subsamples, as well as variability across measurements of sample volumes. Counting organisms within a size class under a microscope is also challenging. For one, it is difficult to evaluate and count dormant or immotile organisms. Also, organisms can have a wide variety of shapes making it difficult to assign to a size class. For example, phytoplankton (organisms in the 10–50 micron size class) may be combined in chains or radially and may be either symmetrical or asymmetrical. Also, sizing generally is to be based on the minimum diameter of width of the cell except for things such as spikes, hair, or appendages. The Second Circuit recognized and upheld an EPA rule that considers the margin of error inherent in measuring aquatic organisms to allow for a standard that is not equivalent to also represent the same level of control. See for example, *Riverkeeper, Inc.* v. *U.S. Envtl. Prot. Agency,* 358 F.3d 174, 188–89 (2d Cir. 2004) upholding EPA's Track II requirements allowing for ''substantially similar'' reductions in impingement and entrainment at new facility cooling water intake structures as not a less stringent standard but the same standard accounting for the measurement margin of error when measuring in the natural environment.

In the case of ballast water, the operators experience even greater variability than would exist at a shoreside facility subject to a typical effluent guideline because, rather than the numeric discharge standard being a

long-term or monthly average, that standard is based on an instantaneous maximum standard, never to be exceeded, which is the unit of time selected for compliance monitoring because of the challenges associated with monitoring, despite varying turbidity, salinity, temperatures and other environmental factors. Vessel owners may have to modify vessel operations to ensure ballast water treatment requirements do not exceed the limitations of the BWMS. BWMS manufacturers must account for these two conflicting challenges—continuous compliance and inherent variability—in their system design and operation. Vendors accomplish this by (1) designing their systems to achieve long-term average discharge concentrations that are *lower than the numeric discharge standard,* and (2) adequately controlling for variation in BWMS performance. Designing a system to meet an instantaneous maximum requires even a higher level of control than that necessary to meet a daily maximum. Designing and operating BWMS to consistently achieve levels close to the numeric discharge standard is poor practice because even relatively slight variability would result in a high rate of non-compliance with the instantaneous maximum numeric discharge standard (and would not pass the USCG type-approval testing process). This partially explains why some of the test results described by the Second Circuit Court decision on the VGP were lower than the current standard. *Nat. Res. Def. Council* v. *U.S. Envtl. Prot. Agency,* 808 F.3d 566, 570 n.11 (2d Cir. 2015). EPA recognizes that variability in performance around the long-term average occurs during normal operations, and that at times even well-operated BWMS will discharge at a level that is higher than the long-term average performance.

iv. Proposed Standard Provides a High Level of Pollutant Reduction

The record demonstrates that the proposed standard reflects BAT in that the current technology, USCG type-approved BWMS, are technologically available, safe, effective, reliable, and commercially available for shipboard installation. Also, the record indicates that their use is economically achievable. These technologies have shown to substantially reduce the concentration of living organisms in ballast water discharges as necessary to meet the discharge standard, beyond the reduction achieved through mid-ocean exchange or unexchanged ballast water.

Specifically, the current standard of 10 organisms per the specified volume of ballast water for the two organism size classes reflects BAT and the current technology basis, use of a USCG type-approved BWMS, effectively removes ANS from ballast water. The Golden Bear Research Center at the California State University Maritime Academy, a university-government-industry partnership that provides shipboard testing of commercial ballast water treatment technologies, recently found BWMS that meet the proposed standard to be highly efficient, achieving several log reductions in pollutant loadings. In 2018, the Center compiled over 100 side-by-side comparisons of the concentrations of ''living'' organisms pumped into their test facility during both land-based and shipboard tests in relation to the final discharge concentration of living organisms after ballast treatment. The order of magnitude of reduction of organisms ranged from 1,000 to over 1,000,000 times; more than half of the comparisons fell in the range 100,000 to 1,000,000 times, or, using the terminology of food and drinking water management, a 5-log to 6-log reduction in targeted organisms (in the log10 scale). In fact, the actual reduction is likely larger because the data were conservatively calculated using fixed minimum detection levels in treated water even when no live organisms were observed at all. This evaluation demonstrates that type-approved BWMS that are designed to meet the proposed standard are highly efficient, achieving several log reductions in pollutant loadings. This level of organism reduction approaches and even exceeds the stringency required in drinking water testing and food management practices (Golden Bear, 2018).

3. Available Information Does Not Justify a More Stringent Discharge Standard

i. Data Quality of IMO BWMS Type-Approval Data Are Inadequate for BAT Evaluation

EPA carefully considered the IMO BWMS test data in the 2011 SAB report that the Second Circuit Court referenced in its decision on the VGP as evidence of BWMS capability, but finds they lack the necessary quality for EPA to develop a revised, more stringent standard for two reasons. *Nat. Res. Def. Council* v. *U.S. Envtl. Prot. Agency,* 808 F.3d 566, 570 (2d Cir. 2015). First, the data packages used in the SAB report were from ballast water management system vendors for their IMO type-approval packages developed under the original *Guidelines for Approval of Ballast Water Management Systems* (G8) adopted in 2005 and revised in 2008 (IMO, 2008). The SAB panel, in response to Charge Question 1, concluded that the BWMS tested under the IMO ''will likely meet USCG Phase I standards.'' In fact, after the SAB report, the USCG found that not to be the case. Further, every vendor with a BWMS requesting USCG type-approval has had to undergo a new round of testing to demonstrate system performance to the satisfaction of the USCG. The IMO has since updated, and codified, new type approval test requirements (IMO, 2018a) that entered into effect in 2019 and address many of the quality issues that limited the reliability of the IMO type-approval data for evaluating BWMS performance.

Second, although the SAB panel determined that nine BWMS representing five BWMS categories had reliable data, they did not fully assess data quality. Instead, the SAB panel made a critical assumption that all protocols and methods were followed exactly as described, regardless of the presence or absence of Quality Assurance/Quality Control (QA/QC) procedures and documentation. Therefore, any use of the findings of the SAB panel must consider this lack of quality assessment. While the USCG does accept IMO data packages for its Alternate Management System (AMS) program, importantly, the requirements for the USCG BWMS type-approval testing require a different type of testing and a higher level of QA/QC than that required by the IMO until the recent entry into effect of the BWMS Code.

As part of the analysis for the proposed rule, EPA conducted an independent review of BWMS performance and data quality. EPA developed a rating system to provide an objective method for determining whether available performance data are of acceptable quality for development of the proposed standard. EPA found that most of the IMO data packages lacked information on test-specific Quality Management Plans, Quality Assurance Project Plans, and individual test results. Average data results were frequently submitted without specific sample dates or reporting of the individual results. While the quality of data improved over time, many reports did not contain adequate information on field replicate samples used for QA/QC measures or actual BWMS flow rates at the time of samples. Also, and importantly, the IMO G8 guidelines required five successful land-based tests as part of the type-approval process regardless of how many tests were conducted to achieve those five successful tests. Thus, for example, a

system that passed five land-based tests but also failed five tests would be considered to have a successful land-based test for type-approval. The IMO did recently revise the G8 guidelines to address this issue. Now, as codified in the BWMS Code, five successful *consecutive* land-based tests demonstrating compliance with the discharge standard are necessary for type-approval.

For these reasons, EPA found that foreign type-approval data, such as that used by the SAB in its analysis, is inadequate to assess whether any IMO-approved BWMS can meet the proposed discharge standard and it follows that such a testing regime would not be of sufficient scientific rigor to be appropriate for use in a BAT analysis. In contrast, EPA found that performance data developed consistent with the USCG type-approval procedures and requirements provided at 46 CFR 162.060 would be of sufficient quality for use in evaluating whether a particular BWMS meets the proposed standard.

ii. Type-Approval Data Do Not Support a More Stringent Standard

To date, more than thirty BWMS have received USCG type-approval. The USCG treats all type-approval submissions as proprietary information; however, EPA was provided anonymous data for 9 manufacturers (11 different BWMS) from the Ballast Water Equipment Manufacturers Association (BEMA). EPA analyzed the data and determined the data submission requirements of the USCG type-approval regulations at 46 CFR 162.060 provides data of sufficient quality for EPA to evaluate system effectiveness for a BAT determination (Ballast Water Equipment Manufacturers Association, 2020).

EPA considers that receipt and review of additional type-approval packages would not support a more stringent standard because these test results are within the same order of magnitude as the current standard and fall within the margin of error expected due to the great variability associated with the characteristics of ballast water and challenges associated with monitoring, analyzing, and enumerating organisms in the different size classes. As noted above, in addressing EPA's effluent limitation guidelines for cooling water intake systems, the Second Circuit Court of Appeals explained that it is reasonable for a performance standard to reflect the margin of error that is inherent when measuring organisms in a natural environment. See *Riverkeeper, Inc.* v. *U.S. E.P.A.,* 358 F.3d 174, 188–89 (2d Cir. 2004). The type approval data must be considered with that margin of error in mind. For example, type approval data provided by BEMA for the 11 different BWMS show the discharge concentrations of organisms greater than 50 microns range from less than 1 to as high as 9.5 organisms per cubic meter, and for organisms between 10 and 50 microns, discharges range from less than 1 to 9.7 organisms per milliliter (mL).

In VIII.B.1.vi.A.3.i., *Data Quality of IMO BWMS Type-Approval Data are Inadequate for BAT Evaluation,* EPA explains the basis for its determination that the IMO data are not of adequate quality to base a standard. However, to demonstrate the impact of the variability of ballast water characteristics, EPA evaluated the court's citation to three UV/filtration systems (Hyde Marine Guardian, Optimarin, and Alfa Laval/Alfa Wall Pure Ballast). *Nat. Res. Def. Council* v. *U.S. Envtl. Prot. Agency,* 808 F.3d 566, 570 n.11 (2d Cir. 2015). The court stated EPA failed to consider the SAB data that showed these systems can meet a standard between the current standard and 10 times the standard. Implicit in the court's statements are that these three systems are 1.4, 3.7, 4.5, or even 7.7 times as effective as the current standard based on the average discharge standard achieved by each BWMS. However, that effectiveness is mischaracterized. In fact, as demonstrated in the USCG type-approval data, simply because one type of BWMS had a lower average discharge concentration than a second type of system did not mean that first system had a higher treatment efficiency. Importantly, the test results demonstrate that in some instances, BWMS achieved a lower discharge standard than a second system during type-approval testing but that first system had fewer organisms to treat in the intake water than that second system. The BEMA data, as highlighted by the examples provided above, demonstrate that performance varies even within a single BWMS and achieving a low average discharge concentration or high log reduction in one setting does not necessarily mean this system is demonstrated to be a more effective system in all situations. In any case, the effectiveness of any USCG type-approved BMWS should not be downplayed. As demonstrated in the data provided by BEMA, every one of the 11 systems achieved a treatment efficiency of at least 99 percent, for both size classes and in both land-based and shipboard testing meaning that any difference in treatment efficiency between these systems is something less than one percent.

The test results identified by the court indicating greater removal of organisms are not an indication that these systems can achieve a more stringent standard in all conditions. Rather, the test results provide a variety of situations where BWMS manufacturers are testing their systems in a variety of environmental conditions and locations around the world, all with the goal of obtaining USCG type approval by demonstrating that the BWMS can consistently meet, not necessarily exceed, the IMO discharge standard. [46 CFR 162.060–10(f)(2)].

To further demonstrate the true performance of a BWMS and to highlight the change in treatment effectiveness associated with meeting a more stringent discharge standard, EPA evaluated data provided directly to EPA by the BWMS manufacturer, Alfa Laval, that had been included as part of its type-approval package submitted to the USCG in September 2016 for its PureBallast 3 filtration + UV BWMS, which received USCG type-approval in December 2016. The results of EPA analysis are presented in Table 1. Using the court's rationale, the Alpha Laval PureBallast 3 system type-approved by the USCG demonstrates 3.7 times more effective treatment for large organisms (*i.e.,* average discharge concentration of 2.7) and 4.6 times more effective treatment for medium organisms (*i.e.,* average discharge concentration of 2.18 organisms). EPA calculated the actual treatment efficiency the Alfa Laval system achieved as well as the efficiency the system would have to achieve to meet the proposed discharge standard, a standard 10 times (10×) more stringent, and a standard 100 times (100×) more stringent. As shown in Table 1, the Alfa Laval system reduced large organisms (>50 microns in size) by 99.98 percent whereas a treatment efficiency of 99.92 percent was needed to meet the proposed discharge standard (*i.e.,* the Alfa Laval system was 0.06 percent more effective). For medium organisms (10–50 microns in size), the Alfa Laval system was 0.29 percent more efficient (Alfa Laval, 2017).

Achieving a numeric discharge standard 10× and 100× more stringent than the proposed standard would represent an insignificant improvement in treatment system effectiveness for both large and medium organisms. For achieving a standard 10× more stringent, the difference is that between 99.92 and 99.99 percent efficiency for large organisms and 97.82 and 99.78 percent for medium organisms. For achieving a

standard 100× more stringent, the difference is that between 99.92 and 99.999 percent efficiency for large organisms and 97.82 and 99.98 percent for medium organisms. These differences in performance are small and within the margin of error due to the variability in ballast water uptake and testing and does not reflect substantial improvement in ANS removal that would warrant a revised standard inconsistent with the international standard.

TABLE 1—TREATMENT EFFICIENCY OF THE ALFA LAVAL PUREBALLAST 3 USCG TYPE-APPROVED BALLAST WATER MANAGEMENT SYSTEM

Size class	Organisms (/m³)		Stringency compared to standard	Removal efficiency (%)	Removal efficiency (%) necessary to achieve		
	Uptake	Discharge			<10/m³	<1/m³	<0.1/m³
≥50 microns	*13,026*	*2.7*	*3.7 times*	*99.98*	*99.92*	*99.99*	*99.999*
10–50 microns	*459*	*2.18*	*4.6 times*	*99.53*	*97.82*	*99.78*	*99.98*

iii. Ballast Water Test Methods Do Not Allow for Establishing a Discharge Standard 100 Times or 1,000 Times More Stringent or a ''No Detectable Organisms'' Standard

Consideration of a standard that is less than 1 organism per volume of ballast water for the two organism size classes (*i.e.,* a standard 10 times more stringent than proposed), including any standard that would be more than 10, 100, or 1,000 times more stringent, is currently not possible because there are no performance data available at these organism concentrations (U.S. EPA, 2011b).

As has been considered in the past by both EPA and the USCG, EPA evaluated whether a discharge standard 100× or 1,000× more stringent than the proposed standard is appropriate. As noted by the SAB, ''methods (and associated detection limits) prevent testing of BWTS to any standard more stringent than the IMO D–2 standard and make it impracticable for verifying a standard 100× or 1,000× more stringent.'' Further, the SAB concluded that no current BWMS can meet a standard beyond 10× more stringent than the current standard (*e.g.,* 100× or 1,000×) as even showing one organism using the current test methods clearly exceeds that more stringent standard. As shown in the review of publicly available USCG type approval data provided by BEMA and evaluated by EPA, at least one living organism was identified in each BWMS type-approval test. Thus, new or improved test methods are still needed to support a statistical determination that technologies are available to meet a standard 100 or 1,000 times more stringent than the IMO discharge standard. Further, EPA has determined, consistent with findings of the SAB, that it is unreasonable to assume that a test result showing zero living organisms using currently available test methods demonstrates complete sterilization if for no other reason than a sample taken represents a very small portion of the overall discharge and the collection of that sample may have missed the few live organisms present in the discharge. And, collecting larger volumes of ballast water becomes impractical. For example, the SAB estimated that anywhere from 120–600 cubic meters of ballast would have to be collected to meet a standard 10× more stringent (U.S. EPA, 2011b).

EPA evaluated the available USCG type-approval data and found that these data do not show that performance better than the proposed discharge standard is achievable in all vessel types and situations. It is important to consider that a USCG BWMS type-approval certification is based on its system components at the time of certification and no changes or optimizations to the technology can be made by the vessel operator. For example, the vessel operator cannot change the filter or chemical concentration to improve the system's performance without the BWMS manufacturer notifying the USCG, in accordance with 46 CFR 162.060–16.

iv. Monitoring Limitations Do Not Support a More Stringent Standard

If a more stringent standard were to be established, it would require confidence in the ability to monitor at that lower concentration to demonstrate both treatment effectiveness of available technology and compliance with the discharge standard. However, monitoring low concentrations of living organisms in ballast water (or direct organism monitoring), by mass or any other measure, at lower levels than necessary for demonstrating compliance with the existing numeric discharge standard is impractical because of challenges with collecting and analyzing ballast water to detect and quantify organisms at those levels. In lieu of direct organism monitoring, in the VGP, EPA developed a three-component self-monitoring program as a reliable indicator of whether BWMS are effectively controlling the discharge of living organisms: (1) Biological monitoring to indirectly assess the effectiveness of reducing living organisms in the discharge, (2) functionality monitoring of the system to assure it is operating as designed, and (3) residual biocide/derivative monitoring for those systems using active substances. Presently, there are no means to routinely sample and analyze in real-time ballast water for compliance with the discharge standard for the two largest size classes of organisms, and while various tools are under development, there is no widely-accepted methodology to formally evaluate and choose tools for use in regulatory enforcement applications (Drake et al., 2014).

There is no basis either in science or the CWA's BAT factors to assume a BWMS can achieve a higher level of treatment than is supported by reliable data. Therefore, regulators have had to rely on indirect indicators of compliance to ensure that any BWMS continues to perform as demonstrated during land- and ship-based type-approval testing. ''Functionality monitoring,'' as required by the VGP, is an indirect indicator of compliance entailing the use of a variety of meters, electronic sensors and analyzers that measure and transmit to control systems operational data such as flow rate, pressure drops across filters, disinfectant concentrations and energy intensity. If these indirect measurements fall within the BWMS design operating ranges, then it is reasonable to assume the BWMS is reducing living organisms as required since the USCG type-approved the BWMS as being able to achieve the living organism discharge standards when operating within the design specifications. The lack of sampling and analysis methods available to monitor ballast water discharges for the two largest organism size classes at lower concentrations than the current

discharge standard with any statistical significance justifies EPA proposing a discharge standard identical to the current standard.

Demonstration of a higher level of treatment effectiveness reasonably would require testing of a different parameter for which there is the ability to monitor, which is likely some measure of organisms other than the two organism sizes classes (and bacteria) upon which the current standard is based. This would require a new type-approval process, which would result in significant delays in testing, ''approving,'' and manufacturing an adequate supply of systems available for installation aboard the global shipping fleet. Conversely, this would require a comprehensive evaluation and selection of more appropriate parameters than the two organism size classes, undertaking a comprehensive monitoring program to sample and analyze ballast water for those new parameters to evaluate BAT for those parameters. Without such an evaluation, EPA does not have the necessary data to justify treatment system effectiveness associated with the required level of pollutant control.

4. Conclusion

In summary, EPA and the USCG are committed to protecting U.S. waters from invasive species and support a strong national and international solution that does not disrupt the continuous flow of maritime commerce that drives the U.S. and global economies. The proposed rule would implement the VIDA requirement for ballast water to establish the standard according to BAT by continuing the current EPA and USCG standard given that the standard and the USCG type-approval process is effective and promotes the development of highly efficient technology to control ANS in ballast water. In the last three years, the USCG has type-approved more than thirty ballast water management systems (BWMS) for vessels that would meet the proposed discharge standard, with at least half as many more under review. These systems have provided a variety of treatment options for a breadth of national and international vessels. The current standard continues to be appropriate to significantly reduce invasive species transport given the complexity of the universe of vessels that would be subject to the proposed rule and the great variation of vessel processes and engineering constraints of ballast water management. The current standard is driving development of type-approved BWMS that are highly efficient. Establishing a more stringent standard at this time would not result in a meaningful improvement in system performance or discharge reduction.

The challenge in ballast water management that will reduce ANS discharges is not adopting a lower or more stringent standard, but instead focusing on the vessel installation of available and highly efficient BWMS; proper operation and maintenance of those systems to achieve the treatment efficacy demonstrated as part of the USCG type-approval testing; and the evolution of vessel ballasting practices to minimize volumes of ballast water requiring management. Only very recently has EPA begun to see broad compliance of the vessel community with installation, operation, and maintenance of the range of the USCG type-approved BWMS. To date, about one-third of vessels operating pursuant to the requirements of the VGP have installed BWMS (U.S. EPA, 2019). In 2017, the American Bureau of Shipping (ABS) conducted a global survey of 27 shipowners with 220 vessels including bulk carriers, tankers, containerships and gas carriers. In 2018, ABS repeated the survey with more than double the participants of 60 shipowners and operators worldwide covering 483 BWMS installations for seven different BWMS treatment technologies. In 2018, ABS found that 35 percent of BWMS installations were reported as operating regularly, and the remaining systems were either inoperable or considered problematic. Surprisingly, the survey findings show that the number of problematic BWMS in operation increased from 29 percent in 2017 to 59 percent in 2018. It appears that many vessel operators are trying to get their BWMS fully functional and into operation before the USCG or IMO compliance deadlines (ABS, 2019) and in starting up and operating installed systems, often for the first time after a period of nonuse since installation, are finding unexpected problems. No particular system is identified as being more or less likely to meet the discharge standard.

Opportunities for advancement in ballast water treatment and technology may require EPA to assist the vessel community in tackling installation and operational challenges with the existing BWMS and future type-approved systems and best management practices. Significant limitations remain in ANS monitoring such that setting a different numeric discharge standard for ANS is unlikely to result in meaningful technological advancement. The VIDA provides EPA and the USCG with this opportunity to streamline the ballast water regulations which should aid with the operation of demonstrated, but not yet fully optimized, systems and with future systems as they continue to come online.

B. Ballast Water Reception Facilities

The VIDA expressly excludes from the discharge standards ''ballast water from a vessel . . . that only discharges water into a reception facility.'' 33 U.S.C. 1322(p)(2)(B)(ii)(V). As such, CWA Section 312(p) does not authorize EPA to regulate the transfer of ballast water from ships to a reception facility as part of the proposed rulemaking. Nonetheless, for the purposes of this proposed rule and to acknowledge the 2015 Second Circuit Court decision on the VGP, EPA reviewed and considered whether zero discharge or a more stringent discharge standard based on the use of a reception facility may be BAT for ballast water discharged from regulated vessels. *Nat. Res. Def. Council* v. *U.S. Envtl. Prot. Agency.,* 808 F.3d 566, 572–75 (2d Cir. 2015). For the purposes of this proposed rule, unless otherwise noted, when EPA refers to ''onshore'' or a ''reception facility,'' it refers to both the transfer of ballast water to either an onshore reception facility or another vessel for the purpose of storing or treating that ballast water.

The Second Circuit Court decision stated that EPA failed to give fair and thorough consideration to reception facilities in setting the discharge standards in the VGP. The Second Circuit stated that a technology is ''available'' in the following instance: ''(1) the transfer technology must be available within the first industry: (2) the transfer technology must be transferable to the second industry; and (3) it must be reasonably predicable that the technology, if used in the second industry, will be capable of removing the increment required by the effluent standards.'' *Nat. Res. Def. Council,* 808 F.3d at 572–73. The Second Circuit stated that in establishing BAT, consideration should be given to whether a particular technology that is being used in another industry could form that technology basis for BAT. As part of the proposed rule, EPA evaluated several technologies to identify whether any such technology is transferable from another industrial sector but has not found any such technologies that would provide a greater level of control for ballast water from vessels. This is largely because of the unique nature of ballast water and its use aboard ships—which are not stationary, and, many of which spend a very small portion of their time in the United States.

In developing this proposed rule, EPA considered whether discharges of ballast water to a reception facility could result

in zero discharge or a more stringent standard for ballast water discharges than what currently exists. EPA investigated ballast water discharges to a reception facility to better understand the technological availability, economic achievability and the non-water quality environmental impacts associated with limits based on its use and explored the alternative forms of reception facilities—including fixed treatment facilities (reception facilities or wastewater treatment plants) and mobile, shore-based, or near-shore-based ballast water treatment deployed on trucks, barges or boats—and feasibility factors of the use of these facilities such as vessel and port characteristics, economic feasibility, and treatment cost estimates.

Despite considering the potential advantages identified in recent years for the use of ballast water reception facilities (*e.g.,* fewer onshore facilities than shipboard systems would be needed; fewer physical restrictions and time limitations could lead to effective treatment technologies), the analysis identified many challenges of implementing a national and international network of reception facilities. By far the most significant challenge is ensuring the availability of reception facilities at all ports of call, because if even one anticipated port location for a vessel does not have an available reception facility, that vessel would need an alternative approach, likely requiring installation of a shipboard treatment system, deferring the discharge of ballast water, or declining to call at that port. A search of the National Ballast Information Clearinghouse found that between the effective date of the 2013 VGP (*i.e.,* December 19, 2013) and the end of 2017, vessels with ballast water operated in approximately 700 U.S. ports and discharged ballast water in over 400 of those ports, with individual discharges as large as 20 million gallons (75,000 MT) and daily combined discharges of more than 25 million gallons (100,000 MT) in a day in a single port (National Ballast Information Clearinghouse, 2020). To meet the ballast water discharge management needs for these vessels would require some type of reception facility at each of those 400 ports (as well as potentially at some of those other 300 ports where vessels operate with ballast water onboard and may at some point have the need to discharge ballast); otherwise, any vessel needing to discharge ballast water at any of these ports would need a BWMS. For example, numerous ports that were initially expecting to accept liquified natural gas, during which ships would offset the reduced cargo weight by taking on ballast water, are now instead planning to export that liquified natural gas, with a consequent need for ships to discharge ballast water while loading cargo. This analysis does not consider the universe of vessels that also operate in other countries and a similar expectation that without reception facility availability, these vessels would still need to install, operate, and maintain a BWMS. The massive scale of the new physical infrastructure that would be needed to accommodate the systematic deployment and application of shoreside ballast water reception facilities is another process and engineering challenge that weighs against the selection of a zero-discharge standard based on discharge to a reception facility as BAT for ballast water. 33 U.S.C. 1314(b)(2)(B).

Another critical challenge is retrofitting vessels with the appropriate ballast water systems (including pipes and pumps) required to move ballast water up from tanks and off the ship at a rate fast enough that the vessel can perform normal cargo operations without significant and costly delays. To date, no U.S. or international ship-to-shore connection standard exists for non-oily ballast water discharges. As such, vessels are not fitted with, nor would an appropriate reception facility have, a standard size, configuration, strength, etc. on which to base a design to ensure vessels would be able to connect and discharge ballast water to such a facility. In a similar situation, the IMO established connection requirements under Regulation 13 of Annex I to MARPOL for oil mixtures, which have been codified in USCG regulations at 33 CFR 155.430, and for which, a similar set of requirements would be needed for non-oily ballast water discharges. Without such an international standard for ballast water connections, implementation of such a requirement would be impractical. Additionally, the configurations of many ports are such that a vessel may berth at any number of locations within the port, necessitating that such reception connection equipment is available at each of these berths and capable of being transferred from that point to the reception facility. As an example of the challenge associated with such a configuration, the Port of Duluth is a single port with 60 docks spanning 49 miles of coastline (Lake Carriers' Association, 2016a).

Also, reception facilities may not provide a complete solution to ballast water treatment. For example, some vessels may need to discharge part of their ballast water before arriving in port so they can conduct cargo operations as soon as possible following arrival at the dock; some vessels need to discharge ballast water to reduce draft before arriving at berth; and lightering vessels may need to discharge ballast as they load cargo at designated anchorages or lightering zones. In each of these instances, some type of reception facility would be required, further complicating the necessary infrastructure to handle discharges from such disparate locations.

The only instance of a ballast water reception facility being used in the United States is in Alaska, specifically to remove oil from ballast water discharges from single hull tanker vessels. Use of facilities such as this, with modifications made specifically to remove living organisms (*e.g.,* filtration with second stage disinfection) might be available for vessels sailing dedicated routes. However, many commercial vessels do not stick to a single voyage pattern (even those usually on dedicated routes) in all instances, which would necessitate either finding a reception facility in the new port(s), rapidly installing a shipboard BWMS, or likely being unable to discharge their untreated ballast water in compliance with the VIDA requirements (which may in effect prevent this vessel from voyaging to that port). Since these changes in voyage patterns are often made on very short notice (often on less than two weeks' notice), it would not be technologically available to install a BWMS on these vessels quickly enough for that new voyage.

EPA evaluated several studies of reception facilities in the United States, including ports in the Great Lakes, Baltimore, MD, California, and internationally, including ports in the Caspian Sea, Netherlands, Brazil, and Croatia. California has led the effort nationally to explore the possibility of reception facilities. In 2013, the California State Lands Commission funded a study to assess ballast water reception facility approaches in California. The report from that study (Glosten Associates, 2018), is currently the most comprehensive review of reception facility options in California. The authors concluded that a network of treatment barges would be the best reception facility approach when compared to land-based treatment to enable vessels to meet California's interim Performance Standards. According to the Study, such an approach would not come without impacts or costs. A barge-based network could lead to increased air emissions

and congestion at California's ports. In the case of the South Coast Air Basin, these ballast water reception facilities could increase overall harbor craft air emissions from 2.5 to 5 percent. The 30-year lifecycle cost of building and operating a network of treatment barges is estimated at $1.45 billion. Marine vessel operators will bear an additional $2.17 billion in costs to retrofit vessels to support transfer of ballast to barges. The authors estimated that it will take a minimum of nine years to implement such a treatment network once the funding is secured. Possible next steps identified by the authors include pilot-scale testing of the ballast water treatment methods and scale-up to a treatment barge to assess system performance over various rates of ballast water transfer. As detailed in the final report: ''The first six years will be occupied with the study of ballast water discharges, building and pilot testing of treatment barge prototype(s), development of transfer station standards, communication of requirements to marine vessels, development of the PPPs [public private partnerships], and contracting for the design/build of the treatment barges. Years 7, 8, and 9 will be occupied with phasing in the treatment barge network. Importantly, Year 1 starts only after budgets and plans have been put into place.'' Thus, in the best case, once funding is available, implementation of a barge-based ballast water management approach in California is still nine years away, if that the pilot project demonstrates such an approach is viable. And importantly, as noted in that report, as of today, no such onshore or barge-based reception facilities currently are in operation in the United States (King and Hagan, 2013; Hilliard and Kazansky, 2006; Hilliard and Matheickal, 2010; Brown and Caldwell, 2007; Brown and Caldwell and Bay Engineering, 2008; COWI A/S, 2012; Damen, 2017; Glosten Associates, 2018; Hull & Associates, 2017; Maglic et al., 2015; Pereira and Brinati, 2012; U.S. EPA, 2011b; USCG, 2013).

Another complication of a reception facility approach is that vessel operators in most cases are not the entities that would build and operate such facilities. As such, these reception facilities would likely only be created where an organization, such as a port authority or terminal operator, identifies a financial opportunity from constructing and operating such a facility. It would be highly speculative that any organization would choose to do so. The scale and cost of operating reception facilities at the hundreds of ports nationwide that handle ballast water from tens of thousands of vessels would require billions of dollars and weighs against finding such technology to be available or economically achievable. It also ignores the thousand plus ports worldwide directly or indirectly linked to many of these same vessels that reasonably would want to be able to discharge ballast to a reception facility at any port visited rather than having to also install and operate a BWMS in those areas where a reception facility is not available. As cited in the Second Circuit decision, *Nat. Res. Def. Council* v. *U.S. Envtl. Prot. Agency.,* 808 F.3d 566 (2d Cir. 2015), the SAB scientists pointed out that: ''[S]hipboard treatment and onshore treatment represent distinct approaches to ballast water management that would each require different large investments in infrastructure . . . . Thus *we are almost certain to be stuck for a very long time with whichever approach is used as the BAT* in setting discharge standards in 2013. It is thus of the utmost urgency that a fair and thorough comparison of the two approaches be made at this time.'' Whether the opinion of the SAB is accurate, it is likely that selecting the reception facility approach would require vessels to also install onboard systems for those times when the vessel may need to discharge ballast water in a port that may not have a functioning reception facility. A further complication here is not just in having to install an onboard system for use only some of the time, it is that if the onboard system is not used consistently and sits idle for a significant portion of the time, it is unlikely to work effectively and is more likely to experience mechanical problems due to periods of nonuse. Conversely, a vessel with an onboard system could operate worldwide without having to rely on others for ballast water management. While use of a reception facility assumes a higher level of treatment than can be achieved onboard a vessel, the specific evaluation performed at each of these hypothetical reception facilities may not actually result in significant discharge reductions.

Based on the record before it, EPA has determined that reception facilities are not technologically available or economically achievable at this time. While EPA understands that the use of reception facilities, if available, may be a valid and effective component of ballast water management in certain situations, the challenges in creating such a comprehensive infrastructure nation-wide (and world-wide) make reception facilities simply not technologically available as defined in the CWA. It also appears to have unacceptable non-water quality environmental impacts in some areas. It is logistically more complex than shipboard treatment for the shipping industry to implement and requires vessel as well as port modifications to be accommodated. It is unlikely that ballast water reception facilities could become a national ''one size fits all'' option for ballast water management, principally because it cannot accommodate widely varying trade routes without the availability of reception facilities in most ports. Port-specific conditions may also preclude any technically available and/or economically achievable reception facility alternatives. Integration with port and vessel operations would require careful planning, design, and operation. If in the future reception facilities become available and economically achievable and have acceptable non-water quality environmental impacts in certain locations for certain specialized sectors of the commercial vessel industry EPA would revisit the standards, but, for now, such an option has not been demonstrated to reflect BAT.

C. Vessels Operating Exclusively on the Great Lakes

After careful consideration of all the relevant factors, EPA proposes to subcategorize and not require any vessel operating exclusively on the Great Lakes, regardless of when they were built, to meet the numeric discharge standard and instead to continue to require that these vessels implement best management practices. As required by the VIDA, EPA assessed the best available technology that is economically achievable and determined that the challenges analyzed in the VGP remain true today. This proposed exemption is based on a set of unique circumstances that make ballast water management especially challenging for these vessels. The challenges include issues related to the operational profile and design of these vessels and issues related to the unique nature of the waters of the Great Lakes. A fuller discussion of EPA's analysis appears below.

1. Ballast Water Management of Vessels Operating Exclusively on the Laurentian Great Lakes

The VGP exempted vessels that operate exclusively on the Laurentian Great Lakes, commonly referred to as ''Lakers,'' and built before 2009 from meeting the numeric discharge standard. As defined by the VGP, this

includes vessels that operate upstream of the waters of the St. Lawrence River west of a rhumb line drawn from Cap de Rosiers to West Point, Anticosti Island, and west of a line along 63 W longitude from Anticosti Island to the north shore of the St. Lawrence River. EPA selected January 1, 2009 as the cutoff date because the IMO originally established this date to require treatment for certain new build vessels. At the time, EPA anticipated that vessels designed to enter the market beginning in 2009 would be prepared to meet the VGP requirements. Since that time, EPA has evaluated the few U.S. and Canadian Lakers that had been built since 2009 and concluded that they were also unable to meet the VGP discharge requirements. Consistent with that conclusion, the USCG regulations do not require non-seagoing vessels, including all Lakers, to meet the numeric discharge standard.

The proposed rule expands the VGP exemption to any vessel operating exclusively on the Great Lakes, regardless of build date, because these vessels share the same challenges in operating BWMS under the environmental conditions of the Great Lakes. The exemption applies to vessels on the Great Lakes that are 3,000 GT ITC (1,600 (GRT) if GT ITC is not assigned) and above, as smaller vessels are exempt under 139.10(d)(2)(i) of the proposed rule as described in VIII.B.1.vii.A. *Vessels Less Than or Equal to 3,000 GT ITC (1,600 GT GRT if GT ITC is not assigned) and That Do Not Operate Outside the EEZ.* For the purposes of the proposed rule and referred to as ''Great Lakes vessels'' in this section, the universe of vessels operating exclusively on the Great Lakes includes two main types of vessels. First, it includes Lakers, as defined in the VGP, as bulk carriers and other similar vessel types (*e.g.,* tank barges) operating exclusively on the Laurentian Great Lakes. Second, it includes any other large vessel, according to the size threshold, that is 3,000 GT ITC (1,600 GRT if GT ITC is not assigned) and above, that voyages exclusively on the Great Lakes, such as ferries. Discussion in this section using the term ''Great Lakes vessels'' does not include seagoing vessels that operate beyond the boundary identified in the VGP and continued for the proposed rule, that being vessels that operate downstream of the waters of the St. Lawrence River west of a rhumb line drawn from Cap de Rosiers to West Point, Anticosti Island, and west of a line along 63 W longitude from Anticosti Island to the north shore of the St. Lawrence River.

There are approximately 150 U.S.- and Canadian-flagged Lakers, with approximately 20 of these (mostly Canadian) constructed in 2009 or later (Marinelog, 2016; Lake Carriers' Association, 2016). The U.S. Lakers generally are larger than Canadian Lakers, with many of these vessels being too large to transit through the Welland Canal and the locks on the St. Lawrence Seaway, thus confining their operations to the four upper Great Lakes. Of the approximately 60 U.S.-flagged Lakers operating on the Great Lakes, only about half are small enough to fit through the Welland Canal; although, from 2015 through 2017, U.S. Lakers operated only 28 voyages east of the Welland Canal (Lake Carriers' Association, 2018). Common U.S. Laker routes are ore cargo runs from Lake Superior to U.S. mills in Indiana, Michigan, and Ohio. In contrast, 81 of the 84 Canadian Lakers are small enough to pass through the Welland Canal and locks on the St. Lawrence Seaway (Lake Carriers' Association, 2016). The U.S.-flagged Lakers that are small enough to transit the locks on the St. Lawrence Seaway are not designed to operate in brackish water or saltwater and therefore do not venture east of Quebec City on the St. Lawrence Seaway. Most Canadian Lakers, on the other hand, commonly operate in brackish water or saltwater and their hulls and ballast tanks have corrosion protection that allow them to transit through the locks on the St. Lawrence Seaway to Canadian coastal ports and for some of these vessels, even to overseas ports. However, U.S. and Canadian vessels that operate exclusively on the Great Lakes share several similar constraints with selection of BWMS because of the short voyages, low salinity, very cold water, high dissolved organic carbon content, and low UV transmittance associated with operation solely within the Great Lakes. Similar vessel design issues are present for both the existing U.S. and Canadian fleets with respect to vessel design and operation.

The Second Circuit Court decision held that EPA acted arbitrarily and capriciously when it exempted Lakers built before 2009 (''pre-2009 Lakers'') from the numeric technology-based effluent limitations of the VGP. *Nat. Res. Def. Council* v. *U.S. Envtl. Prot. Agency.,* 808 F.3d 566 (2d Cir. 2015). The court stated that EPA's decision to exempt Lakers was based on a flawed record that failed to consider the possibility of reception facilities, and that the lack of supply of updated shipboard systems was not a legitimate reason to exempt pre-2009 Lakers as the purpose of a BAT standard is to force technology to keep pace with need. *Id.* at 576. The court cited an EPA SAB Report as support for its decision that EPA was arbitrary and capricious because the Report did not declare such treatment impossible. Instead, the SAB concluded ''[a] variety of environmental (*e.g.,* temperature and salinity), operational (*e.g.,* ballasting flow rates and holding times), and vessel design (*e.g.,* ballast volume and unmanned barges) parameters'' should be considered in determining the treatment standard. *Id.* at 577. The court further concluded that EPA failed to conduct an appropriate and factually-supported cost-analysis which might have shown that the cost of subjecting pre-2009 Lakers to the 2013 VGP was not unreasonably high, or, alternatively, that use of reception facilities was economically achievable. *Id.*

To address all of the above issues, EPA assessed the availability of ballast water treatment technology by evaluating the operational and technical considerations for installation and operation of a USCG type-approved BWMS on Great Lakes vessels and alternative approaches that could be used to develop a specific discharge standard for Great Lakes vessels. Specifically, EPA assessed:

- The compatibility of type-approved BWMS to meet the current discharge standard under the environmental conditions of the Great Lakes;
- the operational and technical challenges of the installation of type-approved BWMS given the unique structure of Great Lakes vessels;
- the potential use of current type-approved BWMS on Great Lakes vessels to meet an alternative standard; and
- the availability of other treatment technologies for Great Lakes vessels.

Overall, it was found that ballast water treatment technologies are not available for Great Lakes vessels at this time because of the uniqueness of these vessels and the Great Lakes ecosystem. EPA evaluated the technical reasons why current type-approved BWMS are not compatible with the environmental conditions of the Great Lakes for each category of treatment system. The environmental conditions evaluated include the water's unique ''freshness,'' as opposed to salinity, the temperature of the water, and the turbidity of the ports. The operational and technical conditions evaluated include the length of voyages and its effect on the BWMS holding times required to achieve the discharge standard and the absence of coated ballast tanks in the fleet. Table 2 summarizes information on the critical limitations that each major disinfection

method currently faces for use on Great Lakes vessels.

TABLE 2—LIMITATIONS OF BWMS DISINFECTION TYPES FOR COMMERCIAL VESSELS OPERATING ON THE GREAT LAKES

BWMS disinfection method	Limitations for use on the Great Lakes
UV	Areas of the Great Lakes, notably in certain river ports, have high turbidity and high dissolved organic carbon content such as from tannins and humic acid, which inhibits effective UV treatment. In addition, most USCG type-approved UV BWMS require holding times of 72 hours, however common trade routes within the Great Lakes take less than 72 hours with some as little as 2 hours. For this reason, vessels would be required to delay cargo loading and discharge ballast water until the holding time is achieved. Several UV BWMS have since been type-approved with holding times as little as 2.5 hours, highlighting the advance of technology in beginning to overcome some of the operational limitations described.
Electrochlorination	Current USCG type-approved BWMS require a supply of saltwater for generating chlorine. Vessels limited to freshwater environments would need to prepare and bunker a synthetic seawater solution, which would limit cargo capacity. Also, chlorine in uncoated ballast tanks increases corrosion rates to unacceptable levels for the structural integrity of the vessel. Therefore, this technology is not technically available.
Chemical Addition	Current USCG type-approved BWMS allow for the addition of chemicals. However, none of the U.S. Laker fleet that operates exclusively on the Great Lakes have coated ballast tanks. This results in an increase in corrosion rates if corrosive chemicals, particularly oxidants, are used, making this technology technologically unavailable and economically unachievable because the vessel would be taken out of service.
Ozonation	Current USCG type-approved BWMS allow for the addition of ozone. However, none of the U.S. Laker fleet that operates exclusively on the Great Lakes have coated ballast tanks. This results in an increase in corrosion rates, making this technology technologically unavailable and economically unachievable because the vessel would be taken out of service.
Deoxygenation	Current USCG-type-approved BWMS require hold times if using a deoxygenation system. Common trade routes for commercial vessels within the Great Lakes move ballast water from lower ports such as Gary, Burns Harbor, Cleveland and Toledo Transit times for these routes are less than 72 hours (USACE, 2017). To comply with the numeric discharge standard, vessels would need to delay cargo loading and discharge of Great Lakes ballast water until the holding time is achieved if using a deoxygenation system that requires hold times greater than transit times. Additionally, deoxygenation can result in increased corrosion due to anaerobic conditions, and the lack of coated ballast tanks makes this technology unavailable.

Ref: (Keister and Balog, 1992; Tuthill et al., 1998; Lake Carriers' Association, 2017; American Bureau of Shipping, 2015; U.S. Army Corps of Engineers, 2017).

2. Compatibility of BWMS To Meet the Discharge Standard Under Great Lakes Environmental Conditions

The environmental conditions of Great Lakes waters present unique challenges for use of any of the more than 20 USCG type-approved BWMS on Great Lakes vessels. At this time, none of these systems can meet the proposed numeric discharge standard given these conditions. Cold ambient water temperatures on the Great Lakes during the earlier and later portions of the shipping season are below the testing parameters of USCG BWMS type-approval testing and, therefore, BWMS have not been demonstrated to work sufficiently under such conditions to meet the numeric discharge standard. For example, winter icing conditions of the exceptionally fresh waters of the Great Lakes impact the ability to operate a BWMS, such as from ice-plugged BWMS filters. Because of winter ice on the Lakes, the navigation season is not usually year-round. The Soo Locks and Welland Canal close from mid-January to late March, when most vessels are laid up for maintenance. However, cold temperature and icing conditions can persist into the Spring. Water temperatures in the Great Lakes during the shipping season can be as low as 0 °C. Lake Erie is below 5 °C for five months a year, lakes Michigan and Huron for almost half the year, and on Lake Superior 5 °C might not be reached until June and be back below by November. Because of the pressure drop across filters, freezing can occur at temperatures above 0 °C. Several USCG BWMS are not approved for operation at a water temperature of less than 5 °C (Monroy et al., 2017; USCG, 2013).

In addition to cold temperatures, the fresh water of the Great Lakes contains extremely low salinity. USCG type-approval testing for freshwater allows a salinity as low as 0.9 practical salinity units (psu), but Great Lakes water, especially Lake Superior, has a much lower salinity of approximately 0.063 ppt. Several USCG type-approved BWMS require a higher salinity than is found in the Great Lakes. For example, electrochlorination systems were designed to use marine water to provide a chloride source to generate chlorine. The freshwater of the Great Lakes does not provide such a source of saline water, requiring a Laker using such a system to bunker saltwater in an unused holding tank or ballast tank and then use this saltwater to generate chlorine for disinfection while ballasting/deballasting within the Great Lakes. EPA analysis demonstrates that this technology is not practicable and is presently unavailable.

Turbidity, excessive levels of tannins, and filamentous bacteria in some areas of the Great Lakes can inhibit the ability of USCG type-approved BWMS to meet the numeric discharge standard. Several river ports in the Great Lakes contain highly turbid water where ballast water uptake occurs. Typical levels of total suspended solids (TSS) found in U.S. Great Lakes port waters range from 400 mg/L in the Rouge River in Detroit, MI, to 1,000 mg/L in the Cuyahoga River in Cleveland, OH. These levels are much higher than those required for USCG type-approval testing. Similarly, areas of the Great Lakes contain excessive levels of tannins that present a challenge to remove with conventional BWMS filters. Turbidity and excessive levels of tannins in some Great Lakes harbors may significantly reduce filter efficiency and UV light transmittance, creating a situation where both USCG and IMO type-approved filtration and UV BWMS cannot achieve the numeric discharge standard. While these circumstances can also occur in coastal ports, it is expected that many seagoing vessels could use operational practices not available to vessels operating on the

Great Lakes, such as exchange of turbid harbor water for less turbid offshore water, which could be treated effectively by the BWMS. In addition, the Great Lakes contains significant quantities of filamentous bacteria that have been shown to cause significant clogging problems with BWMS filters.

Other ballast water treatment technologies are under development, such as membrane filtration, magnetic separation with filtration, and pasteurization. However, no such systems to-date have been demonstrated as effective ballast water treatment to the satisfaction of the USCG for type-approval. Even if these technologies did gain USCG type-approval, there are challenges in applying their use on the Great Lakes. For example, a pasteurization system is designed for large long-haul vessels and requires multiple voyage days to reach pasteurization temperatures and as such would be limited in its use on the Great Lakes because of the many short voyages for vessels in the Great Lakes. As for filtration and magnetic separation with filtration, freshwater organisms must respond to flocculating agents like that of marine organisms to be effectively removed by these technologies. Unfortunately, to date, this ability has not been shown to exist (ClearBallast, 2012; Bawat, 2016; Voutchkov, 2013).

3. Technical Challenges of the Use of USCG Type-Approved BWMS on Great Lakes Vessels

There are numerous, costly technical challenges to implementing BWMS on Great Lakes vessels. If USCG type-approved systems were installed on Great Lakes vessels to meet the discharge standard, some environmental benefit would be provided from the installation and operation of these type-approved systems; however, disproportionate costs would be incurred by this vessel community due to these technical challenges and the discharge standard would not be met given the known environmental challenges. For example, for some U.S. Lakers, particularly those bulk carriers that are more than 50 years old that have been uniquely constructed and converted over the decades, the cost of achieving the standard would be similar to or maybe even exceed the cost of vessel replacement. EPA evaluated the technical considerations relevant to the installation and operation of BWMS on Great Lakes vessels including vessel size, ballasting volumes and flow rates, ballast pump and piping configurations, space considerations, electrical requirements and corrosion issues. It is important to point out there are significant differences in the construction, size, propulsion configurations, electrical systems and capabilities, cargo off-loading equipment, ballast water movement, and other design aspects between individual vessels. These differences require a vessel-specific analysis to determine the technological availability and optimal method for installing and operating a BWMS. In order to consider these differences, EPA grouped the U.S. Lakers into subcategories based on their characteristics (Table 3).

TABLE 3—SUBCATEGORIES OF U.S. LAKER VESSELS

Subcategory	Number of U.S. Lakers [a]	Build dates	Length	Number ballast tanks	Number ballast pumps	Ballast volume (gallons)	Ballast pumping rate (GPM)
Large Capacity Lakers	14	1972–1981	858–1,000-ft	14–22	4–36	9,414,132–16,406,561	20,000–79,800
Converted bulkers to self-unloading ships, includes barges.	18	1906–1959, converted 1958–2014.	437–806 ft	11–22	2–4 pumps/Engine Room (E.R).	1,411,655–12,283,281	14,000–64,800
Newer build—manifold ballast system.	17	1942 (1991)–2012.	519–770	13–21	2 pumps/E.R.	2,121,000–7,851,433	17,400–40,000
Purpose built barge	6	1941 (1998)–2009.	310–460	6 including FP–17.	1–4 pump	638,274–2,045,053	1,000–10,000
Total	57						

[a] Lake Carriers' Association, 2016. Total number of vessels carrying ballast water, including articulated tug-barges. Does not include tugboats since these vessels do not typically discharge ballast water. Does not include barges A–410 or 397 because they do not carry ballast water.

The capacity of the commercially available, type-approved BWMS selected for a Great Lakes vessel must be compatible with the ballast needs of the vessels, particularly the ballasting rate of the ballast pumps. Particularly for Lakers, high ballasting capacities and flow rates limit the options for selection of some commercially available BWMS. The maximum capacity of commercially available filtration and UV BWMS is 6,000 m^3/hr. U.S. Lakers have ballasting capacities as high as 18,000 m^3/hr and therefore multiple filtration and UV BWMS would be required to accommodate these rates. In the analysis, EPA considered installation of multiple BWMS on a vessel as a means to meet the discharge standard. For example, the large capacity vessels may have a ballast water system configuration that includes individual sea chests, ballast pumps and ballast piping for each individual ballast tank. It can have one or two individual ballast pumps and piping per ballast tank. Four of the U.S.-flagged 1,000-foot Lakers have 18 separate ballast pumps and piping, and one 1,000-foot Laker (*i.e., Stewart J. Cort*) has 36 deep well ballast pumps. The *M/V Indiana Harbor* uses four main ballast pumps (two port and two starboard) to pump a total of 11,810 m^3/hr of ballast water. For this Laker, two BWMS would have to be installed (one port and one starboard), each with a capacity to treat at least 6,000 m^3/hr. The *M/V Paul R. Tregurtha* that has a total ballasting capacity of 18,120 m^3/hr and uses 18 separate ballast pumps and tanks, 18 individual BWMS would be needed, each with a capacity to treat at least 1,100 m^3/hr or the entire ship would need to be re-piped at significant cost and downtime.

Great Lakes vessels are designed to maximize cargo capacity and, therefore, have little to no space available in the engine room or around the self-unloading equipment for a BWMS. Space could be created from existing ballast tanks or cargo holds, although this directly impacts the vessel's cargo hauling capacity and therefore economic viability. Again, EPA analysis included the cost and lost revenue implications of lost cargo space or hauling capacity. Converting ballast tanks to accommodate a BWMS may likely also impact vessel stability and requires a detailed vessel-specific analysis by a marine engineer, naval architect, or similar expert to assess viability of such installation and operation.

Electrical capacity on Great Lakes vessels has been sized to accommodate the loading and unloading equipment

that is operational while the vessel is in port. Self-unloading equipment would have to be operated at the same time as the BWMS and, as currently designed, many of these vessels lack electrical capacity for high electrical demand BWMS such as filtration and UV disinfection. Thus, additional electrical generators would be required for operation of the BWMS.

The U.S. Laker fleet has another significant issue with respect to selection of a BWMS: Currently all vessels have uncoated steel ballast tanks. In this manner, U.S. Lakers differ from the Canadian Laker fleet and the oceangoing vessels. This design works for the fleet because the waters of the Great Lakes is so fresh that corrosion is not a concern as these vessels do not operate in brackish or ocean saline waters, where such coating is necessary. Any BWMS that generates chlorine for disinfection by electrochlorination or that doses corrosive treatment chemicals into the ballast water is commercially available in the capacities needed for Lakers and have a lower electrical demand. However, these systems would significantly increase the corrosion rates in the uncoated ballast tanks of existing U.S. Lakers. Coating ballast tanks on existing U.S. Lakers can be done; however, the costs to do so are prohibitively high, and the vessel would require dry-docking for at least a year, a significant lost revenue period, to clean, grind, weld and coat the inside of ballast tanks.

With regards to operational considerations, many inter-lake voyages are shorter than 72 hours (and even as short as 2 hours) and, in these cases, would not provide the required residence time for BWMS technologies that require extended holding times to be effective such as chemical addition, deoxygenation, or UV for many of the USCG type-approved UV-based BWMS U.S. Army Corps of Engineers, 2017). Increasing voyage times by slow steaming to meet minimum hold times for certain BWMS may be possible, but the impact to vessel operations would need to be accounted for in assessing the cost of operation of such systems, including impacts to shippers. In fact, the entire supply chain would be impacted by extra voyage times.

4. Testing of BWMS on the Great Lakes

Testing of various BWMS and their components using ambient Great Lakes water has been conducted at the Great Ships Initiative (GSI) [3] Land-Based Research, Development, Testing and Evaluation Facility located in Duluth-Superior Harbor on Lake Superior. GSI provides freshwater ballast treatment evaluation at three scales—bench, land-based, and on-board ship. GSI, because of its location, uses freshwater from the Great Lakes to evaluate performance of BWMS at removing Great Lakes organisms within the size ranges required in the VGP and USCG discharge standard (using the ETV Protocol) and the IMO protocols for approval of ballast water management systems.

During August through October 2009, the GSI conducted land-based type-approval testing in accordance with IMO G8 guidelines on the Siemens SiCURE™ BWMS (Great Ships Initiative, 2010). The Siemens SiCURE™ BWMS is based on filtration and side-stream electrochlorination of seawater to produce hypochlorite, which is then injected into the incoming ballast water. The results showed that the BWMS functioned properly and was effective at reducing live organism in the regulated size classes at levels below the IMO ballast water performance standard (*i.e.,* Regulation D–2 of the BWM Convention) after the five-day holding time in the fresh water ambient conditions of Duluth-Superior Harbor that had been augmented to achieve IMO challenge conditions. Target bacteria *Escherichia coli* and intestinal enterococci were also discharged at levels below the numeric discharge standard after the 5-day holding time. However, as mentioned previously, electrochlorination requires a bunker of synthetic seawater solution for generating chlorine and can corrode the uncoated tanks of U.S. Lakers.

During September and October 2014, GSI conducted land-based testing of three prototype versions of the chlorine addition-based JFE BallastAce® BWMS to evaluate not only the biological and chemical performance against the USCG ballast water discharge standard, but also the total residual oxidant (TRO) of the chemical system (Great Ships Initiative, 2015). Only the JFE BallastAce BWMS operated using the TG BallastCleaner® at the higher target TRO concentration of approximately 20 mg/L was able to achieve the USCG discharge standard for living organisms although these concentrations did result in elevated levels of disinfection by-products. This system type can also corrode the uncoated tanks of U.S. Lakers.

Using filtration and UV BWMS can avoid the corrosion concerns. However, testing of the filtration and UV Alfa Laval PureBallast® Version 3 BWMS in Duluth-Superior Harbor in 2010 using ambient Great Lakes water failed to achieve the USCG and IMO numeric discharge standards in the two regulated size classes, even though intake organism densities in the Great Lakes harbor water were well below IMO and EPA's ETV Protocol challenge conditions. GSI concluded that the system failed to achieve the USCG numeric discharge standard due to the filters' ineffectiveness at removing filamentous algal forms in Duluth-Superior Harbor water. In addition, very low ambient UV transmittance of Duluth-Superior Harbor water (naturally caused by tannins) at the time of testing likely inhibited the effectiveness of the UV disinfection unit (Great Ships Initiative, 2011).

5. Consideration of a Type-Approved BWMS Equipment Requirement

EPA also considered an option in which Great Lakes vessels would be required to install, operate, and maintain a USCG type-approved BWMS but not have to meet a discharge standard. This option assumes that the structural challenges of installing, operating and maintaining a USCG type-approved BWMS, particularly for Lakers, could be overcome and would be available and economically achievable. Specifically, consideration was given to an equipment carriage requirement in which a Great Lakes vessel would be required to install, operate and maintain (*i.e.,* carry) a USCG type-approved BWMS, but would not be required to meet a numeric discharge standard acknowledging the unique Great Lakes environmental conditions and vessel voyage patterns. The advantage to this approach is that, although treatment may not be able to consistently meet the discharge standard due to the Great Lakes conditions, some reduction in the discharge of ANS would likely occur.

EPA is not proposing this approach because such a requirement to install a current BWMS without addressing the incompatibility with the environment conditions of the Great Lakes or the technical equipment considerations does not reflect BAT. There is significant uncertainty as to the operational functionality of BWMS in the Great Lakes, particularly when operating conditions extend outside the design parameters of any available treatment systems. For example, given that U.S. Lakers have uncoated ballast tanks, it is expected that many vessel

[3] The Great Ships Initiative, which commented in 2005, is an industry led collaborative effort to address problems of ship-mediated invasive species in the Great Lakes Saint Lawrence Seaway System.

owners would opt for UV-based BWMS to meet such an equipment standard. As shown in the GSI testing of the filtration and UV Alfa Laval PureBallast® Version 3 BWMS in Duluth-Superior Harbor in 2010 using ambient Great Lakes water, the system failed to achieve the USCG and IMO numeric discharge standards in the two regulated size classes due to the filters' ineffectiveness at removing filamentous algal forms and very low ambient UV transmittance of Duluth-Superior Harbor water (naturally caused by tannins) which likely inhibited the effectiveness of the UV disinfection unit (Great Ships Initiative, 2011). All of the other USCG type-approved BWMS systems were evaluated for a carriage requirement and it was found that these other systems face operational challenges similar to the UV system. Clogged filters in turbid ports and under icing conditions could significantly impact vessel operations, even halt operations, if the BWMS ceased working.

In addition, EPA determined that such an equipment requirement does not meet the ''economically achievable'' portion of the BAT requirement for this proposed rule. An equipment standard may require a costly installation and maintenance of a system only to be faced with an imperative for the vessel owner to modify the system to be able to operate the vessel as necessary or even to replace the system with newer technology in the near future. Vessels that operate exclusively in the Great Lakes have a significant lifespan as compared to seagoing vessels due to the freshwater conditions of the Great Lakes. Installation of a BWMS on a Laker, for example, would be based on the life of the BWMS, not the life of the vessel. However, retrofitting a Laker for BWMS is a significantly costly endeavor, particularly for U.S. owned vessels, which as Jones Act vessels, are required to be built in U.S. shipyards or pay a 50 percent U.S. tax for repairs done in a foreign shipyard. For this reason, if a Laker vessel was reconfigured to fit a current USCG type-approved system, retrofitting that same vessel for a newer BWMS that may require a different configuration may be cost prohibitive and impede the deployment of more effective technologies in the future.

There are insufficient data at this time to establish an alternative equipment standard for Great Lakes vessels that is technically available and economically achievable. EPA has determined that implementing a carriage standard may be short-sighted and costly to the vessel community with an unknown level of effectiveness to reduce ANS discharges in the Great Lakes. Additional research is needed before EPA could identify a standard that reasonably satisfies the statutory BAT requirements consistent with Section 903(g)(2)(B)(viii) of the VIDA which establishes a program for EPA, in collaboration with other federal agencies, to research and develop BWMS for use by vessels operating on the Great Lakes.

6. The Availability of Alternative Approaches for Great Lakes Vessels

EPA assessed whether technologies are available other than USCG type-approved BWMS or other BMPs that could be used for Great Lakes vessels. The IMO has approved more than 60 commercially available BWMS. However, as discussed earlier, the IMO type-approval process does not meet EPA and USCG QA/QC criteria and as such, vendors must obtain USCG type-approval for any BWMS to be used in the U.S. beyond the five-year bridge to compliance during which time an IMO type-approved and USCG recognized alternate management system (AMS) may be used. EPA also evaluated the potential for technology transfer from other industries. However, adapting land-based technology for use onboard a vessel entails different criteria and challenges, such as acceptable shipboard materials, safety, hazardous spaces, and vessel stability considerations. For these reasons, no similar technologies have been identified for evaluation against this vessel-based standard, which accounts for vessel design, stability, and safety at sea.

Information on technologies and practices other than type-approved systems is limited but EPA did evaluate alternative options for Great Lakes vessels. The three alternatives considered include (1) use of filtration only, (2) open lake exchange of highly turbid water taken up in river ports, and (3) exempting the use of a ballast water treatment system for certain voyages when the operational parameters of an installed BWMS cannot be met.

i. Filtration

Some research has explored the potential of using filtration-only to treat ballast water; rather than the more common filtration coupled with disinfection. The Great Ships Initiative (GSI) evaluated the performance of eight commercially available filter systems which covered a range of technologies and nominal pore sizes using ambient Duluth-Superior Harbor water and amended intake water to achieve a minimum concentration of 24 mg/L total suspended solids (TSS). Analysis of the GSI filter system performance data shows that regardless of filter pore size, no system can achieve the IMO or USCG numeric discharge standards. According to GSI, the soft-bodied microzooplankton which make up most zooplankton in Duluth-Superior Harbor that straddle the 50μm size range were the most difficult to remove by filtration. Macrozooplankton, which are the least numerous in Duluth-Superior Harbor, were the easiest to remove by filtration (Great Ships Initiative, 2014).

GSI's findings are consistent with other researchers who studied the performance of BWMS filtration systems in the Great Lakes. In 2012, Briski et al. (2014) collected before and after filtration samples from a 40 μm BWMS filtration unit installed on the M/V Richelieu, a 729-foot bulk carrier that typically operates in the Great Lakes and the Atlantic coast of North America. The three shipboard trials conducted dock side in Quebec City, Quebec and Sarnia, Ontario, and at anchor in Thunder Bay, Ontario, found filtration significantly reduced abundance of copepods and cladocerans, but not of juvenile dreissenid veligers and rotifers. Briski et al. concluded that filtration alters the relative abundance of zooplankton, but filtration alone does not reduce introduction risk of any taxonomic group due to the small juvenile stages and dormant eggs which can be passed through BWMS filters (Briski et al., 2014).

EPA determined that filtration alone is not sufficient to meet the numeric discharge standard and there is neither sufficient data at this time to establish an alternative standard for Great Lakes vessels using filtration that would reduce ANS discharge at a known effectiveness level nor information on the practical installation and operation, including cost, of such a filtration alternative.

ii. Open Lake Exchange

As detailed in the sections above, using a UV-based BWMS eliminates the corrosion concerns associated with use of other types of BWMS that rely on oxidizing chemical addition; however, Great Lakes harbors with high sediment loads and excessive levels of tannins, particularly in river ports, significantly reduce UV light transmittance and prevent UV-based BWMS from providing treatment necessary to achieve the discharge standard. EPA considered a practice in which a vessel leaving a turbid port could conduct an exchange after leaving the port (*e.g.,* mid-lake) to flush the turbid water, then use a type-approved BWMS to treat the mid-lake water and any residual ballast

water and sediments. However, EPA determined that there is insufficient data to support the effectiveness of such an alternative practice in reducing ANS discharges in the Great Lakes. In addition, more information is needed to ensure any unintended consequences are avoided that could result from transferring river sediment to an open-lake environment. Importantly, it is also not clear that Lakers, which are not built to seagoing standards, would be able to safely conduct open-lake exchange due to concerns regarding vessel stability and increased stress during the ballast exchange process.

iii. Voyage-Specific Exemptions

EPA also considered the option of requiring Great Lakes vessels to meet the numeric discharge standard using a type-approved BWMS, but to allow the vessel to not have to use the system during certain voyages when the vessel is operating outside the design range of the system. For example, the short voyage times of many Lakers inhibit the use of UV disinfection, deoxygenation, or chemical treatment of many BWMS which require a specific holding time (*e.g.,* 72-hour hold time after treatment). An exemption could be given in advance for specific voyages that do not allow sufficient hold time as specified for the BWMS. Short voyages, particularly intra-lake routes, likely pose less of a risk of ballast water spread of ANS, therefore the use of BWMS could be prioritized for inter-lake voyages. In addition, incentives could be explored that encourage vessel owners to modify their voyage pattern to accommodate sufficient holding time for inter-lake voyages.

The same principle could be applied for voyages during cold months when icing condition occur, or the ambient water temperatures fall below the parameters of the BWMS and impede its operation. An exemption could be given in advance for voyages when these temperatures occur during the shipping season. In addition, there may be less biological activity during the colder months of the year and ANS spread could pose less of a risk. This exemption would allow the operation of a BWMS to be prioritized during increased temperatures when risk increases.

In principle, these exemptions are practical approaches that could be beneficial to allow the prioritization of the operation of BWMS when there is a possibility of more ANS discharges, such as during inter-lake voyages or higher temperatures. However, insufficient data exist to support the imposition of an alternative standard for Great Lakes vessels in the proposed rule and also, it is not clear how such an inconsistent management regime would be evaluated for compliance with the standards and enforcement purposes. Additional research is needed to determine the feasibility of such alternatives and the effective reduction of ANS from these practices. For example, one consideration to address is if the BWMS is only operating during certain voyages, the untreated ballast water and sediments in the tank may reduce the BWMS effectiveness during times when the system is required to be operated. In addition, implementation of these exemptions is contingent on the fact that the structural challenges can be overcome to install and operate a BWMS on Lakers as already described. If these structural challenges can be overcome, these exemptions could play a critical role in advancing the use of BWMS on the Great Lakes vessels during times of prioritized risk.

EPA determined that these three alternatives are not sufficient to meet the numeric discharge standard and there is insufficient data at this time to establish an alternative standard or requirement for Great Lakes vessels that would reduce ANS discharges at a known effectiveness level. Additional research is needed to explore these options. Congress clearly acknowledged that there are not currently practicable ballast water management solutions for Lakers and established the Great Lakes and Lake Champlain Invasive Species Program under the VIDA for EPA to develop such solutions.

7. Conclusion

To date, no technologies or management practices beyond those identified previously in the VGP and USCG regulations have been demonstrated to be available and implementable solutions to address ballast water discharges from the universe of vessels that operate exclusively on the Great Lakes. In November 2016, the Great Ships Initiative (GSI) published a briefing paper highlighting the problem and need for pure freshwater testing in the Great Lakes stating that USCG and IMO require, as a part of their testing protocols, ''challenge conditions for organism sizes and densities that are not a good fit for native (Great Lakes) assemblages'' (Great Ships Initiative, 2016). While more research is conducted as authorized by the VIDA, EPA is proposing in this rule to continue to exempt Lakers as well as other vessels that operate exclusively in the Great Lakes from the numeric discharge standard.

EPA believes it is important that new technologies and practices be identified that reduce the discharge of non-indigenous species specifically from Great Lakes vessels and meet the BAT standard. To support the goal of identifying those technologies, EPA is considering whether to require owners/operators of Great Lakes vessels to perform a self-assessment either individually or in partnership with other vessel owners/operators and submit information annually to EPA. Details of the types of information considered and how that information may be used are described in VIII.B.1.vi.C.8.*i. Vessel-Specific Data Submission to Inform Revised Standard for Vessels Operating Exclusively on the Great Lakes.*

It is important that this class of vessels remain intimately involved in the technology development and be the basis for the demand for innovative, cost-effective solutions by working closely with researchers and manufacturers. BWMS may very well be developed in stages for the various types of Great Lakes vessels. For example, the design and construction of a newly built vessel would provide the best opportunity to accommodate sufficient space for electrical and mechanical systems. Marine engineers and naval architects could also specify that ballast tanks be completely welded, all sharp metal edges be rounded, and all metal surfaces within the ballast tanks be coated with a material to prevent corrosion. The goal is that research can focus on development of technology to address the environmental and operational conditions Great Lakes vessels.

The VIDA acknowledges the lack of availability of BWMS for Great Lakes vessels and authorizes EPA within its Great Lakes National Program Office to establish the Great Lakes and Lake Champlain Invasive Species Program. One of that program's purposes is identified to develop, achieve type-approval for, and pilot shipboard or land-based ballast water management systems installed on, or available for use by vessels operating solely within the Great Lakes and Lake Champlain to prevent the spread of ANS within the Great Lakes and Lake Champlain Systems. This program is to be developed in collaboration and consultation with several other federal agencies. As acknowledged by Congress in its inclusion of this provision in the VIDA, this program is expected to play a vital role to advance the development of type-approved ballast water management system for Great Lakes vessels and inform future regulations.

Vendors of BWMS to date have not expended adequate time and resources to advance systems that would work onboard Great Lakes vessels, because this fleet represents such a small percentage of the world-wide market, leaving the owners of these vessels with no alternative to selecting a commercially available system that would achieve the numeric ballast water discharge standard once installed and operated on the Great Lakes. This collaborative research strategy is important to drive the market for this technology given the small number of vessels. For example, the combined U.S. and Canadian Laker fleet is less than 150 vessels compared to the tens-of-thousands of other ocean-going vessels worldwide that are now purchasing and installing systems to meet the U.S. or IMO-based ballast water discharge standards.

Once EPA has data and information that can be used to identify additional BAT approaches for Great Lakes vessels, be it installation of technology or implementation of best management practices, the Agency expects to propose updates to the discharge standard to reflect new BAT-based requirements. Such an update may address the entire universe of vessels that operate exclusively on the Great Lakes, or reasonably could consider the appropriateness of the identified technology or practices to the different segments of the Great Lakes fleet, such as among classes, types, and sizes and between new and existing vessels as provided for under the VIDA. While CWA Section 312(p)(4)(D)(i) calls for EPA to review the discharge standards at least every five years and revise if appropriate, the Agency expects a more fluid assessment of the adequacy of standards for Great Lakes vessels, acknowledging that ballast water management research and development activities described under the Great Lakes and Lake Champlain Invasive Species Program established under the VIDA may provide a sound basis for proposing new or updated standards in less than the five-year statutory review timeframe. In CWA Sections 312(p)(10)(B), the VIDA also creates a role for the states in promulgating enhanced Great Lakes requirements by enacting a process in which Governors of the Great Lakes states can work together to develop an enhanced standard of performance or other requirements with respect to any incidental discharge, including ballast water. In all cases where Great Lakes Governors propose an enhanced requirement, EPA and USCG may only reject the proposed requirement if it is less stringent than existing standards or requirements under this section, inconsistent with maritime safety, or inconsistent with applicable maritime and navigation laws and regulations.

8. EPA Seeks Input on Great Lakes Vessels

i. Vessel-Specific Data Submission To Inform Revised Standard for Vessels Operating Exclusively on the Great Lakes

EPA is seeking input on whether to include in the final rule a provision requiring that vessels operating exclusively on the Great Lakes, conduct a self-assessment either individually or in partnership with other vessels and submit information annually to EPA. EPA would use this information, together with information on the general sources of incompatibility and the challenging environmental conditions of the Great Lakes with installing and operating existing USCG type-approved BWMS, to revise the discharge standards as new technologies become available and economically achievable (and have acceptable non-water quality environmental impacts). This information would also be critical for the Great Lakes and Lake Champlain Invasive Species Program effort to develop practical ballast water management technologies for Lakers. An important aspect of any future analysis of these vessels is to acknowledge that BAT may not result in the same discharge standards for other classes of vessels or that a one-size-fits-all approach for Great Lakes vessels may not be appropriate. This may be because the technologies and practices available and economically achievable for new vessels may be different from those available to existing vessels, or because the best available technology differs by class of vessels (*e.g.,* self-unloading bulkers, tank barges). EPA is committed to performing a full assessment of environmental conditions and vessel ballasting activities in the Great Lakes as necessary to enhance requirements for Great Lakes vessel ballast water management technologies and practices that reduce the discharge of ANS in the Great Lakes. The goal of this effort is to bring all Great Lakes vessels into compliance with a numeric ballast water discharge standard as soon as is possible under the law.

EPA seeks comment on the type of vessel-specific information that would be valuable for Great Lakes vessels to include in their annual submission and for EPA to assess. This information could include: Operational considerations on locations and opportune times to conduct ballast water monitoring; specific details of voyages that impact holding times of certain BWMS; details of loading/unloading logistics that limit ballast water management; and reasons for such limitations, including weather considerations, crew considerations or other operational information. In addition, information could be provided on the characteristics of ports for future opportunities for onshore or barge-based reception facility opportunities. Although EPA could also request financial information, EPA proposes not to do this at this time until EPA identifies a promising candidate technology or suite of technologies for Great Lakes vessels.

ii. Applicability of Ballast Water Discharge Standards to Vessels That Operate Primarily, But Not Exclusively, in the Great Lakes

EPA is seeking input on whether to include in the final rule an extension of the proposed exemptions from the ballast water discharge standards to also include vessels operating primarily, but not exclusively, on the Great Lakes. As written, the proposed rule would require this class of vessels that operate primarily in the Great Lakes but do occasionally voyage to coastal ports outside of the Lakes to both perform a ballast water exchange prior to re-entering the Lakes and to meet the numeric discharge standard for any ballast water, including any unpumpable residual waters and sediments, subsequently discharged within the Great Lakes, similar to requirements applicable to vessels entering the Great Lakes from overseas voyages. EPA is seeking this input acknowledging that the BWMS installed to treat ballast water taken up outside of the Great Lakes will be unlikely to consistently meet the numeric discharge standard for ballast water taken up within the Great Lakes because of the same environmental challenges of operating a BWMS under the conditions of the Great Lakes described for those vessels operating exclusively within the Great Lakes.

With that in mind, EPA is seeking input on whether a vessel that maybe voyages outside the Great Lakes once or twice a year, but in no case more than half of the time, should be required to install a ballast water management system for use during those times when the vessel is discharging ballast water that had been taken on outside of the Great Lakes. The type of information for which EPA is seeking input include the voyage patterns and durations and

ballasting and ballast management practices for these vessels both within and outside of the Great Lakes; tank cleaning procedures, frequencies, and locations and the practicability of ballast tank cleanings upon re-entry into the Great Lakes; financial implications for these vessels to install a ballast water treatment system that may have to be replaced within the next five years based on updates to the national discharge standards to future research on appropriate technologies and practices for managing ballast water in the Great Lakes; and the appropriate line of demarcation for the Great Lakes.

The vessels that would be impacted by this option are mostly, if not exclusively, Canadian vessels that voyage to coastal ports outside of the Great Lakes where bulk cargo is reloaded onto seagoing vessels for transport around the world. This portion of the vessel universe includes bulkers, tankers, general cargo vessels, articulated tug-barges, tugboats, river barges, and passenger vessels. Most coastal vessel voyages originate in ports in western Lake Superior and western Lake Erie where bulk cargo including grain and coal is loaded and then transported to Canadian ports along the St. Lawrence Seaway east of Montreal. EPA has limited information on this class of largely Canadian vessels and the nature of their voyage patterns and ballasting activities (Bailey et al., 2012).

As described in VIII.B.1.vi.C.8.i. Vessel-Specific Data Submission to Inform Revised Standard for Vessels Operating Exclusively on the Great Lakes, EPA is committed to performing a full assessment of environmental conditions and vessel ballasting activities in the Great Lakes as necessary to enhance requirements for Great Lakes vessel ballast water management technologies and practices that reduce the discharge of ANS in the Great Lakes with a goal to update the standards at a later date based on the findings from that assessment.

vi. Exemptions From the Numeric Ballast Water Discharge Standard

EPA proposes to exempt certain vessels from the numeric ballast water discharge standard as specified in 139.10(d) of the proposed rule. These exemptions are generally consistent with the VGP and USCG 33 CFR part 151 subparts C and D regulations with some exceptions as described below.

The proposed exclusions in section 139.10(b), VIII.B.1.ii. *Exclusions,* would exclude vessels from the ballast water regulations and all requirements of this part on the basis that those vessels do not contribute significantly to the introduction or spread of ANS. Excluding those vessels minimizes other non-water quality environmental impacts that may result from the operation of ballast water treatment systems, including increased energy usage and increased carbon emissions in instances that outweigh any meaningful benefit from nominal reductions in ANS discharges.

In contrast, the proposed exemptions in section 139.10(d)(3) as described in this section, would exempt vessels from the numeric ballast water discharge standard in section 139.10(d) only. Exempt vessels would still be required to meet the ballast water BMPs described in section 139.10(c) of the proposed rule and the ballast water exchange and saltwater flushing requirements included in section 139.10(e) of the proposed rule, as applicable.

There are six categories of vessels that would be exempt from the discharge standard, and they are: Any vessel that is less than or equal to 3,000 GT ITC (1,600 GRT if GT ITC is not assigned) and that does not operate outside the exclusive economic zone (EEZ); any non-seagoing, unmanned, unpowered barge, except any barge that is part of a dedicated vessel combination such as an integrated or articulated tug and barge unit; any vessel that uptakes and discharges ballast water exclusively in a single COTP Zone; any vessel that does not travel more than 10 NM and does not pass through any locks; any vessel that operates exclusively in the Laurentian Great Lakes; and any vessel in the USCG Shipboard Technology Evaluation Program (STEP). In VIII.B.1.v.C.1. *Ballast Water Management of Vessels Operating Exclusively on the Laurentian Great Lakes,* we explained the exemption for vessels that operate exclusively in the Laurentian Great Lakes. Discussion of all six categories is included below.

A. Vessels Less Than or Equal to 3,000 GT ITC (1,600 GRT if GT ITC Is Not Assigned) and That Do Not Operate Outside the EEZ

The proposed rule would carry forward the existing VGP and USCG 33 CFR 151.2015 exemption from the ballast water numeric discharge standard for vessels that are less than or equal to 3,000 GT ITC (1,600 GRT if GT ITC is not assigned) and that do not operate outside the EEZ. This includes both seagoing and non-seagoing vessels. EPA bases this proposed exemption on the finding that ballast water technologies are not available or economically achievable for this universe of smaller vessels (*e.g.,* tugboats) as to date, ballast water treatment systems generally have been designed for larger vessels or vessels that only uptake or discharge ballast water on either end of longer voyages. EPA did identify one vessel in the 2018 VGP annual reports that meets the exemption characteristics. EPA considered whether a different threshold in terms of size should be used; however, EPA proposes to retain the threshold from the VGP that is also consistent with the existing USCG ballast water regulations.

Therefore, EPA proposes that this class of vessels can minimize the discharge of untreated ballast water through best management practices only, without being required to meet the ballast water numeric discharge standard. It is important to note that this exemption will be reconsidered in the future if technology becomes available for this size class of vessels.

B. Non-Seagoing Unmanned, Unpowered Barges

Most unmanned, unpowered barges operate in internal and coastal waterways (*i.e.,* non-seagoing) to transport low-value bulk items such as grain, coal, and iron ore. These vessels have no on-board crew and do not have infrastructure that allows for complex or energy intensive operations. EPA understands that ballasting for some of these barges is performed in limited instances such as to pass under bridges or to improve stability in bad weather or other rough water. These barges typically do not have dedicated ballast tanks but can use wing tanks (void space) in the hull when ballasting is necessary. Minimal water is used for ballasting. Unmanned, unpowered barges have been recognized as posing unique challenges for managing ballast water. For instance, EPA's SAB notes: ''Inland waterways and coastal barges are not self-propelled, but rather are moved by towing or pushing with tugboats. Because these vessels have been designed to transport bulk cargo, or as working platforms, they commonly use ballast tanks or fill cargo spaces with water for trim and stability, or to prevent excessive motions in heavy seas. However, the application of [Ballast water management systems] on these vessels presents significant logistical challenges because they typically do not have their own source of power or ballast pumps and are unmanned.'' (U.S. EPA, 2011b).

EPA proposes to exempt any non-seagoing, unmanned, unpowered barge, that is not part of a dedicated vessel combination, such as an integrated or articulated tug barge (ATB) unit

consisting of two separate vessels that operate in tandem, always together. The 2013 VGP, in Part 2.2.3.5.3.2, exempted all unmanned, unpowered barges from compliance with the numeric ballast water discharge standard; however, the USCG regulations at 33 CFR 151.2015 does not exempt any seagoing vessel 3,000 GT ITC (1,600 GRT if GT ITC is not assigned) and above or that operates outside of the EEZ. As such, the proposed requirement is a harmonization of the VGP and the USCG existing requirements. The record indicates that an unmanned, unpowered barge, when part of a dedicated vessel combination, can install a BWMS as may be necessary to meet the discharge standard and as such these dedicated vessel combinations including an unmanned, unpowered barge are not exempt from compliance with the numeric ballast water discharge standard.

C. Vessels That Uptake and Discharge Ballast Water Exclusively in a Single COTP Zone

Consistent with the provisions of the previous VGP and existing USCG regulations at 33 CFR 151.2015(c) and (d)(3), the proposed rule would exempt from the ballast water numeric discharge standard vessels that uptake and discharge ballast water exclusively in a single COTP Zone, but that may operate in more than one COTP Zone. This exemption retains the BMPs for these vessels to ensure that ballast water is managed appropriately, however acknowledges that in all other instances, the discharge does not significantly contribute to the introduction and spread of ANS.

D. Vessels That Travel No More Than 10 Nautical Miles and Do Not Pass Through Any Locks During Their Voyages

Consistent with the provisions of the previous VGP, the proposed rule would exempt from the ballast water numeric discharge standard vessels that travel no more than 10 NM and do not pass through any locks during their voyages. These vessels (*e.g.,* cross-river ferries) contribute insignificantly to the introduction and dispersal of ANS, however, the implementation of the best management practices for these short-voyage vessels is intended to minimize the contribution of ANS that the vessels could cumulatively have in a region. Exempting these vessels also helps minimize other non-water quality environmental impacts that may result from the operation of ballast water treatment systems, including increased energy usage and increased carbon emissions. 40 CFR 125.3(d)(3). Further, many existing ballast water treatment systems use biocides that need minimum contact time to be effective. Short distance voyages may not provide the time necessary for biocides to be effective. In fact, the discharge of ballast water treated with biocides may contain residuals or byproducts from that treatment, and short voyage times may not permit adequate decay or neutralization.

While at this time EPA is not aware of any specific vessels which currently meet these criteria for the exemption, EPA did not want to inadvertently require ballast water numeric discharge standard be met for such vessels.

E. Vessels That Operate Exclusively in the Laurentian Great Lakes

As described in VIII.B.1.vi.C. *Vessels Operating Exclusively on the Great Lakes,* EPA proposes to subcategorize and not require any vessel that operates exclusively in the Laurentian Great Lakes to meet the numeric ballast water discharge standard. EPA determined that the challenges that existed for pre-2009 Lakers at the time the VGP was issued remain true today not only for bulk carriers but for any vessel operating exclusively in the Laurentian Great Lakes. The details of the circumstances that make ballast water management uniquely challenging for pre-2009 Lakers include issues having to do with the operational profile and design of these vessels and with the unique nature of the waters of the Great Lakes as described in VIII.B.1.vi.C. *Vessels Operating Exclusively on the Great Lakes.* As such, EPA is proposing to expand this exemption from the VGP to any vessel operating exclusively on the Great Lakes, acknowledging that the extreme environmental conditions and operational limitations for pre-2009 Lakers also affect the ability of other vessels that exclusively trade on the Great Lakes to effectively install and operate a BWMS to effectively treat ballast water.

EPA acknowledges this standard is less stringent than the VGP; however, the VIDA provides for less stringent requirements when, as in this case, the Administrator determines that a material technical mistake occurred when promulgating the existing requirement of the VGP. 33 U.S.C. 1322(p)(4)(D)(ii)(II)(bb). EPA made such a material technical mistake when it failed to acknowledge that the extreme environmental conditions and operational limitations that prevented pre-2009 Lakers from treating its ballast water also affect the ability of other Great Lakes vessels from doing the same.

Also, consistent with CWA Section 312(p)(4)(D)(ii)(II)(aa), the Administrator may revise a standard of performance to be less stringent than an applicable existing requirement if information becomes available that was not reasonably available when the Administrator promulgated the initial standard of performance or comparable requirement of the VGP, as applicable (including the subsequent scarcity or unavailability of materials used to control the relevant discharge); and would have justified the application of a less-stringent standard of performance at the time of promulgation. As detailed in VIII.B.1.vi.C.1. *Ballast Water Management of Vessels Operating Exclusively on the Laurentian Great Lakes,* subsequent to issuance of the VGP, EPA evaluated post-2009 Lakers and concluded that they too are unable to meet the VGP discharge requirements, which is new information not reasonably available to the Administrator when EPA issued the VGP.

EPA is not proposing to exclude any vessels from the Great Lakes saltwater flushing and ballast water exchange requirements when such vessels enter the St. Lawrence Seaway through the mouth of the Saint Lawrence River; thus, any vessel operating in the Laurentian Great Lakes that leaves the Lakes and takes on ballast water outside of the Lakes would be required to exchange that ballast prior to re-entering the St. Lawrence Seaway through the mouth of the St. Lawrence River consistent with the Great Lakes requirements in section 139.10(f) of the proposed rule. The Agency is requiring this as specifically established by Congress in the VIDA CWA Section 312(p)(10)(A).

F. Vessels in the USCG Shipboard Technology Evaluation Program (STEP)

The proposed rule would exempt from the ballast water numeric discharge standard a vessel equipped with ballast tanks if that vessel is enrolled by the USCG into the Shipboard Technology Evaluation Program (STEP). This exemption is consistent with existing VGP requirements and USCG 33 CFR part 151 subpart D regulations. The STEP program currently applies and will continue to play a critical role in the development of effective ballast water treatment systems, as with many other related or similar programs the USCG might implement in the future. The program has encouraged pioneering vessel operators to install ballast water

treatment systems, contributed to the development of effective sampling methods, and allowed for the collection of valuable shipboard ballast water treatment data needed to evaluate the efficacy of ballast water treatment systems. Furthermore, STEP is a venue for treatment vendors to develop and refine systems that comply with the ballast water numeric discharge standard, can be successfully approved through the USCG type-approval process, and result in the availability of a greater range of systems for vessel owners. Vessels involved in STEP use ballast water treatment technologies that share similarities in capabilities (and in many cases, are the same systems) as those described in the technical reports EPA used to inform the proposed rule. Therefore, EPA proposes to exempt them as they are effectively using treatments systems which reflect BAT.

vii. Numeric Ballast Water Discharge Standard Compliance Dates

EPA is not proposing compliance dates for the numeric ballast water discharge standard; rather, the Agency expects the USCG to include such as part of its VIDA CWA Section 312(p)(5) implementation, compliance, and enforcement rulemaking. The Agency acknowledges and supports continuation of the USCG extension program, in 33 CFR 151.1513 and 151.2036, for those cases where the master, owner, operator, agent, or person in charge of a vessel subject to this subpart can document that, despite all efforts, compliance with the numeric ballast water discharge standard is not possible. The details of such vessel-specific requests are left to the USCG. For perspective, the existing USCG review considers safety and regulatory requirements of electrical equipment, vessel capacity to accommodate BWMS, vessel age, shipyard availability, or other similar factors and extensions are granted for no longer than the minimum time needed, as determined by the USCG, for the vessel to comply with the numeric ballast water discharge standard.

viii. Ballast Water Exchange and Saltwater Flushing

A. Ballast Water Exchange

The proposed rule would require certain vessels to conduct a ballast water exchange as an interim ballast water management measure prior to compliance with the ballast water numeric discharge standard. Except for vessels entering the Great Lakes, vessels on Pacific Region voyages, and vessels with empty ballast tanks, the VIDA did not alter the ballast water exchange requirements in the VGP and USCG regulations at 33 CFR 151.2025. EPA proposes to maintain these requirements that prior to a vessel meeting its compliance date for meeting the numeric ballast water discharge standard, any vessel operating beyond the EEZ and with ballast water onboard that was taken within 200 NM of any shore must either meet the numeric discharge standard or conduct a mid-ocean exchange further than 200 NM from any shore, prior to entering waters of the United States or waters of the contiguous zone. As in the VGP, the exchange must occur as early as practicable in the voyage, so long as the exchange occurs more than 200 NM from shore. This requirement reduces the likelihood of the spread of ANS, most notably prior to a ballast water numeric discharge standard compliance date, by increasing the mortality of living organisms in ballast tanks and ensuring that the discharge contains fewer viable living organisms.

As to the requirements that would apply to vessels entering the Great Lakes and vessels on Pacific Region voyages, those are described in VIII.B.1.x. *Vessels Entering the Great Lakes* and VIII.B.1.xi. *Pacific Region.* The proposed requirements for empty ballast water tanks are described in the next section.

B. Saltwater Flushing for Empty Ballast Tanks

Saltwater flushing is defined as the addition of as much mid-ocean water into each empty ballast tank as is safe for the vessel and crew; and the mixing of the flush water with residual ballast water and sediment through the motion of the vessel; and the discharge of that mixed water, such that the resultant residual water has the highest salinity possible; and is at least 30 parts per thousand. A saltwater flushing may require more than one fill-mix-empty sequence, particularly if only small quantities of water can be safely taken onboard a vessel at one time.

The VIDA expanded the requirements that apply to empty ballast tanks beyond the existing EPA requirements in the VGP and in the USCG regulations. Specifically, CWA Section 312(p)(6)(B) requires that vessels conduct mandatory saltwater flushing of empty ballast tanks that carry unpumpable ballast water and residual sediments. As established by the VIDA, EPA proposes to require that vessels with empty ballast tanks and bound for a port or place of destination subject to the jurisdiction of the U.S. must conduct a saltwater flush no less than 200 NM from any shore, for a voyage originating outside the United States or Canadian EEZ, or no less than 50 NM from any shore, for a voyage originating within the United States or Canadian EEZ, prior to arriving at that port or place of destination.

The saltwater flushing requirement is important as it is a widely-used, low-cost preventative approach that minimizes the risk that ANS will be introduced from unpumpable ballast water and residual sediment. The technologies and practices of saltwater flushing are therefore available, practicable, and economically achievable. Saltwater flushing is most effective at eliminating organisms adapted to freshwater and low salinity environments due to the combined impacts of saltwater shock and physical dilution. However, saltwater flushing should also reduce viable living organisms adapted to estuarine, coastal and marine environments. Saltwater flushing reduces viable living organisms in residual ballast water through dilution. It also reduces organisms in resting stages in the residual sediment. Resting stages of ANS often inhabit the sediment in ballast tanks; thus, a reduction in the number of these organisms will likely reduce the propagule of these potential invaders.

The VIDA also specifies certain exceptions to these saltwater flush requirements. Exceptions are identified if the unpumpable residual waters and sediments were treated by a USCG type-approved BWMS; sourced within the same port or place of destination or contiguous portions of a single COTP Zone; or if the vessel is operating exclusively within the internal waters of the United States or Canada. The VIDA also describes additional exceptions including: If compliance would compromise the safety of the vessel as determined by the USCG; is otherwise prohibited by any federal, Canadian, or international law (including regulations) pertaining to vessel safety; or if design limitations of the vessel prevent a saltwater flush from being conducted.

The saltwater flushing exception in the VIDA based on the safety of the vessel is not included in this proposed rule; rather, EPA expects that such safety concerns will be fully articulated in the USCG implementing regulations as applicable to all types of discharges. Section 139.1(b)(3)of the proposed rule makes very clear that the numeric ballast water discharge standard is not applicable if compliance with such standard would compromise the safety of the vessel or is in the interest of ensuring the safety of life at sea, as determined by the Secretary.

The proposed rule would add a limitation to the design exclusion as

established by the VIDA to apply only to existing vessels, defined as a vessel constructed prior to the date identified in the forthcoming USCG implementation regulations as described in section 139.1(e) of the proposed rule. EPA interprets this provision in the VIDA to apply only to existing vessels since the VIDA added permanent exchange requirements, presumably because of the added benefit in performing such an exchange. This limitation is important to create a disincentive to designing and constructing new vessels that are not capable of conducting an exchange or flush. It is critical that new vessels have the capability to conduct exchange and flushing, even if they install a ballast water management system, particularly as a contingency measure if the treatment system fails to operate as expected.

With the exception of Pacific nearshore voyages (as described in the section below), the VGP only specified requirements for saltwater flushing of empty tanks for vessels that are engaged in an international voyage and traverse more than one COTP Zone. These vessels are required to either seal the tank or conduct saltwater flushing of such tanks in an area 200 NM from any shore. The VGP also allowed, except for vessels entering the Great Lakes or in federally-protected waters, a vessel to not deviate from its voyage, or delay the voyage to conduct ballast water exchange or saltwater flushing. However, the VIDA did not include such an exemption and as such an exemption is not included in the proposed rule.

The proposed requirements for saltwater flushing as established by the VIDA would be new for vessels engaged in coast-wise voyages on the East Coast and Gulf Coast within the EEZ and traverse more than a single COTP Zone outside of internal waters. These vessels will now be required to conduct a saltwater flush of empty ballast tanks no less than 50 NM from any shore before arriving at a U.S. port, regardless of whether they must deviate from their voyage to do so.

The oceangoing vessels subject to this requirement are either those that have an empty ballast tank or a tank that contains unpumpable residual water, or are vessels that certify, consistent with USCG regulations, that they have ''No Ballast on Board'' (NOBOB). The USCG and the VGP defined NOBOB vessels as ''those vessels that have discharged ballast water to carry cargo, and as a result, have only unpumpable residual water and sediment remaining in tanks.'' See 70 FR 51832, August 31, 2005.

ix. Vessels Entering the Great Lakes

The proposed rule would require, based on CWA Section 312(p)(10)(A), vessels entering the St. Lawrence Seaway through the mouth of the St. Lawrence River to conduct a complete ballast water exchange or saltwater flush (as appropriate) not less than 200 NM from any shore for a voyage originating outside the EEZ; or not less than 50 NM from any shore for a voyage originating within the EEZ. There are exceptions to these requirements including: If the vessel has no residual ballast water or sediments onboard to the satisfaction of the Secretary; empty tanks are sealed; or ballast water is retained onboard while operating in the Great Lakes. Consistent with the previous requirements in the VGP, the proposed rule does not contain an exception for vessels that use a ballast water management system to treat the ballast water prior to discharge. Therefore, the proposed rule would make permanent the requirement for both exchange and treatment for most vessels entering the Great Lakes.

The VGP required vessels that operate outside the EEZ and more than 200 NM from any shore and then enter the Great Lakes through the St. Lawrence Seaway to conduct ballast water exchange or flushing in addition to treatment, if ballast water uptake occurred within the previous 30 days from a coastal, estuarine, or freshwater ecosystem with a salinity of less than 18 parts per thousand. EPA proposes that this requirement of the VGP is not necessary to include in the proposed rule given that the VIDA statutory requirements are more restrictive than (and supersede) the VGP.

Consistent with the VIDA, the proposed rule would expand the requirement for exchange or saltwater flushing plus treatment for vessels entering the Great Lakes through the St. Lawrence River to a larger universe of vessels, as compared to the previous VGP and USCG 33 CFR part 151 regulations. First, the proposed rule would extend the requirement for exchange plus treatment to vessels with voyages originating within the United States or Canadian EEZ that enter the Seaway; these would be primarily Canadian vessels. Second, the proposed rule would extend the requirement for exchange plus treatment to international vessels with voyages originating from higher salinity ports outside the EEZ; these were not included in the VGP. In 2014 and 2015, a total of 81 unique vessels arrived at U.S. ports in the Great Lakes from oversees on 131 voyages. Most of these voyages departed from European ports (82 percent). However, there is limited data of the salinity of the origination port. Therefore, it is difficult to estimate the affected universe from higher salinity ports that would now be required to do exchange plus treatment. However, many of these vessels may have been conducting exchange plus treatment prior to the compliance dates for these vessels to install a ballast water management system, to ensure compliance with the VGP. Consequently, there may be minimal impact on these vessels.

Existing USCG regulations at 33 CFR 151.1502 require that vessels, after operating on the waters beyond the EEZ during any part of their voyage, that enter through the St. Lawrence Seaway or that navigate north of the George Washington Bridge on the Hudson River, perform a ballast water exchange or saltwater flush regardless of other port calls in the U.S. or Canada during that voyage, except as expressly provided in 33 CFR 151.2015(a). In the proposed rule, EPA does not specifically identify this universe of vessels for having to perform a ballast water exchange or saltwater flush prior to entering the Hudson River or St. Lawrence Seaway, unless the vessel is meeting the ballast water numeric discharge standard (*e.g.,* has installed and is operating a USCG type-approved ballast water management system), as the proposed rule would require such ballast water exchange or saltwater flush for all vessels subject to the ballast water discharge standard. Therefore, while the proposed rule does not call out this universe of vessels specifically, similar requirements are being proposed for these and a larger universe of vessels.

Consistent with the VIDA (CWA Section 312(p)(10)(A)(ii)(I)), the proposed rule would provide additional exceptions to ballast water exchange or saltwater flush requirements for vessels entering the Great Lakes, if compliance would compromise the safety of the vessel; or is otherwise prohibited by any federal, Canadian, or international law (including regulations) pertaining to vessel safety; or if design limitations of an existing vessel prevent a ballast water exchange from being conducted. As described in the previous section, the proposed rule would add a limitation to the design exclusion to apply only to existing vessels, defined as a vessel constructed prior to the date identified in the forthcoming USCG implementation regulations, as described in section 139.1(e) of the proposed rule. This limitation is important to prevent the design and

construction of new vessels that cannot conduct an exchange or flush. It is critical that new vessels entering the Great Lakes have this capability, even if they install a ballast water management system, particularly as a contingency measure if the treatment system fails to operate as expected.

x. Pacific Region

The CWA Section 312(p)(10)(C) establishes more stringent Pacific Region requirements for ballast water exchange than currently required in the VGP. As established by the VIDA, the proposed rule would require that any vessel that operates either between two ports within the U.S. Pacific Region; or between ports in the Pacific Region and the Canadian or Mexican Pacific Coast north of parallel 20 degrees north latitude, inclusive of the Gulf of California, must conduct a complete ballast water exchange in waters more than 50 NM from shore. The term ''Pacific Region'' includes the entire EEZ adjacent to the states of Alaska, California, Hawaii, Oregon, and Washington. There are exceptions in the VIDA to these exchange requirements including if the vessel is using a type-approved BWMS or for voyages between or to specific ports in the states of Washington, Oregon, California, Alaska, and Hawaii, and the Port of Los Angeles, the Port of Long Beach, and the El Segundo offshore marine oil terminal, if the ballast water originated from specified areas.

The VIDA also specifies, and the proposed rule would require, that any vessel that transports ballast water sourced from low salinity waters (less than 18 parts per thousand) and in voyages to a Pacific Region port or place of destination with low salinity, must conduct a complete ballast water exchange. The exchange must occur not less than 50 NM from shore, if the ballast water was sourced from a Pacific Region port; or more than 200 NM from shore, if the ballast water was not sourced from a Pacific Region port. These exchange requirements would not apply to any vessel voyaging to the Pacific Region that is using a type-approved BWMS that achieves standards of performance for low salinity water that are more stringent than the existing VGP and USCG ballast water numeric discharge standards. The low salinity water standards of performance as specified in CWA Section 312(p)(10)(C)(iii)(II) are:

(A) Less than 1 organism per 10 cubic meters, if that organism (1) is living or has not been rendered nonviable; and (2) is 50 or more micrometers in minimum dimension;

(B) less than 1 organism per 10 milliliters, if that organism (1) is living or has not been rendered nonviable; and (2) is more than 10, but less than 50, micrometers in minimum dimension; and

(C) concentrations of indicator microbes that are less than (1) 1 colony-forming unit of toxicogenic *Vibrio cholerae* (serotypes O1 and O139) per 100 milliliters or less than 1 colony-forming unit of that microbe per gram of wet weight of zoological samples; (2) 126 colony-forming units of *Escherichia coli* per 100 milliliters; and (3) 33 colony-forming units of intestinal enterococci per 100 milliliters. There are exceptions to these requirements including if the vessel does not have residual ballast water or sediments onboard; empty tanks are sealed; or ballast water is retained onboard.

As established by the VIDA, the proposed rule would exempt vessels from the Pacific Region requirements if any of the following conditions exist: (1) Compliance would compromise the safety of the vessel; (2) design limitations of an existing vessel prevent a ballast water exchange from being conducted; (3) the vessel has no residual ballast water or sediments onboard to the satisfaction of the Secretary, or the vessel retains all ballast water while in waters subject to the requirement; or (4) empty ballast tanks on the vessel are sealed in a manner that ensures that no discharge or uptake occurs and that any subsequent discharge of ballast water is subject to the requirement. As described in the previous ballast water exchange sections, the proposed rule would add a limitation to the design exclusion to apply only to existing vessels, defined as a vessel constructed prior to the date identified in the forthcoming USCG implementation regulations, as described in section139.1(e) of the proposed rule and only as determined by the Secretary. This limitation is important to prevent the design and construction of new vessels that cannot conduct an exchange or flush. It is critical that new vessels voyaging to the Pacific Region have this capability, even if they install a ballast water management system, particularly if the treatment system fails to operate as expected.

As compared to the VGP, the VIDA expanded requirements for the Pacific Region to include exchange or more stringent treatment for low salinity waters. For some vessels the proposed rule requirement to conduct ballast water exchange in the Pacific Region is an interim requirement until a vessel installs a type-approved ballast water treatment system that meets the ballast water discharge standard. However, any vessel that transports low salinity ballast water (less than 18 ppt) and voyages to a low salinity Pacific Region port must continue to conduct a complete ballast water exchange more than 50 NM from shore, unless it has installed a type-approved BWMS that achieves standards of performance, depending on the parameter, up to 100 times more stringent than the existing discharge standard. Currently, there is not a USCG type-approval process for BWMS to demonstrate the ability to achieve this more stringent standard. Therefore, vessels from low salinity waters would need to continue to conduct exchange until such a process is developed and BWMS are approved to meet that more stringent standard.

For the most part, the continental shelf along the Pacific coast is narrow along both North and South America. Deep water environments beyond the continental shelf typically support ecosystems that are quite different than those which exist closer to shore. Due in part to this short width of the continental shelf, relatively deep waters beyond 50 NM from the Pacific shore, exchange at this distance from the Pacific shore will be effective.

In addition, the VIDA described the applicability of the Pacific Region exchange requirements differently as compared to the VGP. The proposed rule implements the VIDA requirements as established by Congress in the statute rather than as written in the VGP. The VGP required exchange for vessels on nearshore voyages which carry ballast water taken on in areas less than 50 NM from any shore. It defined nearshore voyages as those vessels engaged in coastwise trade along the U.S. Pacific coast operating in and between ports in Alaska, California, Oregon and Washington that travel between more than one COTP Zone. The VIDA did not include the stipulation that a vessel voyage must be more than one COTP Zone. In addition, the VIDA includes vessels operating in ports in the state of Hawaii, with certain exceptions, in the exchange requirements which the VGP did not include. The VGP required exchange for all other vessels that sail from foreign, non-U.S Pacific, Atlantic (including the Caribbean Sea), or Gulf of Mexico ports, which do not sail further than 200 NM from any shore, and that discharge or will discharge ballast water into the territorial sea or inland waters of Alaska or off the west coast of the continental U.S. The VIDA did not identify nearshore voyages from outside of the Pacific Region EEZ (although it did include parts of Canada and

Mexico) as required to conduct exchange.

xi. Additional Considerations in Federally-Protected Waters

The proposed rule would require avoiding the discharge or uptake of ballast water in federally-protected waters. This requirement is similar to the existing VGP requirement with one key exception. The proposed standard removes the applicability of this requirement in areas outside the boundaries of a federally-protected water but that nonetheless may directly affect that federally-protected water. EPA is not including this expansion of the affected area based on the Agency's determination that information needed by a vessel operator to make such a ''may directly affect'' determination is highly dependent on the specific instant at which a ballast water uptake or discharge event is to occur and that the necessary information to make that determination is not readily available and not easily characterized. However, the Agency does recommend that the discharge or uptake of ballast water be conducted as far from federally-protected waters as possible.

2. Bilges

Bilgewater consists of water and residue that accumulates in a lower compartment of the vessel's hull. The source of bilgewater is typically drainage from interior machinery, engine rooms, and decks. Bilgewater contains both conventional and toxic pollutants including oil, grease, volatile and semi-volatile organic compounds, inorganic salts, and metals. Volumes vary with the size of the vessel and discharges typically occur several times per week. Cruise ships have been estimated to generate 25,000 gallons per week for a 3,000 passenger/crew vessel (U.S. EPA, 2008). However, bilgewater treatment technologies can remove pollutants from bilgewater. For example, ultrafiltration can be effective in removing turbidity and suspended solids, organic carbon, and several trace metals (such as aluminum, iron, and zinc) from bilgewater, in addition to oil (Tomaszewska et al., 2005).

Under MARPOL Annex I, all ships of 400 GT ITC and above are required to have equipment installed onboard that limits the discharge of oil to less than 15 ppm when a ship is underway. All vessels of 400 GT ITC and above are also required to have an oil content monitor (OCM), including a bilge alarm, integrated into the piping system to detect whether the treated bilgewater that is being discharged from the bilge separator meets the discharge requirements. Bilge separators, OCMs, and bilge alarms are certified by the USCG to meet 46 CFR part 162 (MARPOL Annex I implementing regulations). Type approval is based on testing of manufacturer-supplied oil pollution control equipment by an independent laboratory, in accordance with test conditions prescribed by the USCG (33 CFR parts 155 and 157 and 46 CFR part 162). Additionally, as appropriate, the discharge of bilgewater also must comply with related requirements in 33 CFR part 151, 40 CFR part 110 and 46 CFR part 162.

The VGP included several requirements for bilgewater that are now proposed as general requirements in the proposed standards in Subpart B—General Standards for Discharges Incidental to the Normal Operation of a Vessel and applicable to all vessels and all discharges. First, the VGP required operators to minimize the discharge of bilgewater by minimizing production, storing bilgewater while operating in the waters of the United States, and discharging the bilgewater to a reception facility. These VGP requirements are consistent with, and incorporated as expected practices of, the proposed general discharge standards in section 139.4(b)(1) that require vessels to minimize discharges. Second, the VGP required vessels greater than 400 GT ITC that regularly sail outside the territorial sea (*i.e.,* at least once per month) to discharge treated bilgewater while underway and if feasible, at least 1 NM from shore. With the slight modification described in the following paragraph, the proposed bilgewater discharge standard is consistent with the VGP requirements. Third, the VGP required certain operators to meet a discharge limit for oil of 15 ppm or to not discharge oil in quantities that may be harmful as defined in 40 CFR 110.3. These VGP requirements are consistent with the proposed general discharge standards in section 139.6(b)(2) that prohibit the discharge of oil in such quantities as may be harmful. As such, the specific discharge standard for bilges does not duplicate these three requirements; rather, bilgewater discharges must meet these requirements as applicable to all vessels and all discharges.

The proposed rule would expand upon the applicability of the requirement to discharge treated bilgewater while underway to all vessels of 400 GT ITC and above, not just those that regularly sail outside the territorial sea. However, the proposed rule provides added flexibility by allowing any vessel, including vessels of 400 GT ITC and above to discharge treated bilgewater any distance from shore (the VGP prohibited these vessels from discharging bilgewater within 1 NM of shore). This modification acknowledges that the VGP requirement for discharging while underway, which was triggered if vessels operate outside of waters subject to the VGP at least monthly is difficult to implement and led to confusion about whether and when a vessel may be authorized to discharge bilgewater when not underway. For additional context, data from the most recent VGP annual reports show that very few vessels in this size class discharge bilgewater, treated or untreated, into waters of the United States. The VGP annual reports for the 2019 operating year show that of the more than 28,000 vessels of 400 gross tonnage and above operating in waters covered by the VGP, more than 99.7 percent of those vessels did not discharge any bilgewater, treated or untreated, into these waters. However, to provide additional opportunities to discharge, the proposed VIDA standards allow all vessels, including vessels of 400 GT ITC and above, to discharge treated bilgewater while underway anywhere, except in federally-protected waters. EPA expects this slight modification to the VGP requirements would clarify the applicability of the requirements but would not impose any significant additional cost burden; rather, it would only require certain vessel operators to adjust the timing and location of bilgewater disposal. Consistent with section 139.1(b)(3) of the proposed standards, an operator of a vessel of 400 GT ITC and above may discharge bilgewater, treated or untreated, while stationary (and not underway) if compliance with this part would compromise the safety of life at sea.

The proposed rule would also continue the requirement from the VGP and require that the discharge of bilgewater must not contain any flocculants or other additives except when used with an oily water separator or to maintain or clean equipment. And consistent with the VGP, the use of any additives to remove the appearance of a visible sheen would be prohibited.

Finally, as discussed in VIII C. *Discharges Incidental to the Normal Operation of a Vessel—Specialized Areas,* and as required by the VGP, EPA proposes additional controls for discharges from bilges into federally-protected waters.

EPA researched the state of bilgewater treatment systems to consider whether a targeted reduction in the bilgewater numeric discharge standard from 15 ppm to 5 ppm oil and grease might have

been appropriate (U.S. EPA, 2011c). Previous comments submitted through the VGP comment period in 2013 indicated that technology meeting such a limit appeared to be available for most vessels and economically achievable for at least new vessels. However, those previous comments generally made three major assertions:

1. Before imposing requirements in the U.S., EPA should work with the international community at IMO to explore whether to have more stringent limits for new build vessels;
2. EPA should seek additional information as to whether systems do, in fact, continue to perform as indicated in their type approval data when on-board ships; and
3. Type approved systems capable of meeting a 5 ppm limit are available.

After considering the VGP comments and other relevant information, EPA decided not to propose a 5 ppm numeric discharge standard for several reasons. First, concerns were raised during the VGP comment period regarding whether these systems are, in practice, ''available,'' and function onboard ships as their type approval data indicate they should. Additionally, a 2015 study, identified as the ''MAX1 Studies'' and commissioned by the National Fish and Wildlife Foundation, with oversight from the USCG, reached the conclusion that existing regulations for oily water separators ''. . . are, for the most part, sufficient for their purposes'' and that the focus needs to be on implementation and application of existing regulations. Lastly, assuming that systems are indeed capable of meeting a 5 ppm numeric discharge standard, the standard OCMs in wide use may be unreliable at this low of a detection level and may therefore result in frequent false alarms.

At this time, EPA invites comment on the proposed standard and whether the following should be required by the final rule: (1) Type-approved systems capable of meeting a 5 ppm numeric discharge standard, and (2) OCMs that can consistently and accurately determine oil content at these low detection levels when considering margin for error. The research performed by EPA suggests that OCMs relying on alternative mechanisms other than turbidity/light scattering, such as UV fluorescence, may be more accurate since the monitor can differentiate between oil and other contaminants. EPA invites comment on the cost and availability of such OCMs.

3. Boilers

Boiler blowdown is the discharge of water and constituents from the boiler during regular intervals to avoid concentration of impurities and at intermittent intervals for cleaning or other purposes. Boiler blowdown occurs on vessels with steam propulsion or a steam generator to control anti-corrosion and anti-scaling treatment concentrations and to remove sludge from boiler systems. Routine blowdown involves releasing a volume of about one to ten percent of the water in the boiler system, usually below the waterline to manage the accumulation of solids and buildup of dissolved solids in the boiler water. Frequency of required blowdown varies, typically between once every two weeks to once every couple of months although on some vessels, blowdown may be as frequent as daily or even continuously. The constituents of boiler blowdown discharge vary according to the types of feed water treatment used, but may include toxic pollutants such as antimony, arsenic, cadmium, copper, chromium, lead, nickel, selenium, thallium, zinc, and bis (2-ethylhexyl) phthalate.

EPA endeavored to identify new technology and best management options for discharges from boilers; however, EPA did not identify new information or options. As such, EPA relied on the BPT/BCT/BAT analysis that led to the development of the VGP requirements, following the procedures described in section 4.2 of the Final 2013 VGP Fact Sheet. Similar to the VGP, the proposed standard would require that the discharge of boiler blowdown be minimized when in port. This requirement acknowledges that blowdown typically must be performed as necessary and that while the amount of blowdown can often be minimized, the timing of such blowdown, in many instances, cannot be safely changed, such as to only those times when a vessel is not in port.

The proposed boiler standard does not carry forward language from the VGP regarding the prohibition on boiler blowdown discharges for vessels greater than 400 gross tonnage which leave the territorial sea at least once per week except in three specific instances: (1) The vessel remained within waters subject to this permit for a longer period than the necessary duration between blowdown cycles; (2) the vessel needed to conduct blowdown immediately before entering drydock; or (3) for safety purposes. EPA opted not to include similar language in the proposed rule because the VGP approach, which was triggered if vessels operate outside of waters subject to the VGP at least once a week, led to confusion about when a vessel may be authorized to discharge boiler blowdown. Rather, the proposed boiler blowdown standard was developed acknowledging that, consistent with the General Operation and Maintenance requirements described in Subpart B, vessel operators would be expected to minimize discharges of blowdown to only those times when necessary and to discharge while the vessel is underway when practical and as far away from shore as practical.

As drafted, and consistent with the VGP, the proposed standard would allow the discharge of boiler blowdown (1) if the vessel remains within waters of the United States and waters of the contiguous zone for a longer period than the necessary duration between blowdown cycles, (2) if the vessel needs to conduct blowdown immediately before entering drydock, or (3) for safety purposes.

This proposed standard is similar to the VGP requirements for blowdown that was applied to vessels greater than 400 GT ITC but expands the requirement to all vessels. EPA proposes the standard with the expectation that all vessels and not just vessels of 400 GT ITC and above can minimize discharges of blowdown and when having to discharge boiler blowdown, can discharge while underway if practical and as far from shore as practical. Based on the VGP experience whereby vessels greater than 400 GT ITC have been meeting this requirement by adjusting the timing and location of blowdown events, EPA expects that (smaller vessels) can similarly change the timing and location of their blowdown events as necessary to minimize the discharge. EPA expects this slight modification to the VGP requirements would reduce the discharge of various pollutants but would not impose any significant additional cost burden; rather, it would only require certain vessel operators to adjust the timing and location of blowdown events.

Finally, as discussed in VIII C. *Discharges Incidental to the Normal Operation of a Vessel—Specialized Areas,* and as required by the VGP, EPA proposes to prohibit the discharge of boiler blowdown into federally-protected waters.

4. Cathodic Protection

Cathodic protection systems are used on vessels to prevent steel hull or metal structure corrosion. The two types of cathodic protection are galvanic (*i.e.,* sacrificial anodes) and impressed current cathodic protection (ICCP). Using the first method, anodes of, typically, magnesium, zinc, or aluminum are ''sacrificed'' to the

corrosive forces of the seawater, which creates a flow of electrons to the cathode, thereby preventing the cathode (*e.g.,* the hull) from corroding. Using ICCP, a direct current is passed through the hull such that the electrochemical potential of the hull is sufficiently high enough to prevent corrosion. The discharge from either method of cathodic protection is continuous when the vessel is waterborne. However, galvanic protection discharges include both toxic and nonconventional pollutants such as ionized zinc, magnesium, and aluminum.

EPA endeavored to identify new technology and best management options for discharges resulting from cathodic protection; however, EPA did not identify new technology since the development of the VGP. As such, EPA relied on the BPT/BCT/BAT analysis that led to the development of the VGP requirements and is proposing to require substantively the same standard of performance required by the VGP acknowledging that many of the VGP requirements for cathodic protection are now incorporated into section 139.4 of the proposed rulemaking for general operation and maintenance as applicable to all specific discharges. For example, Part 2.2.7 (Cathodic Protection) of the VGP required that sacrificial anodes must not be used more than necessary to adequately prevent corrosion of the vessel's hull, sea chest, rudder, and other exposed vessel areas. EPA is not including this specific requirement for cathodic protection in section 139.13 of this proposed rulemaking since section 139.4(b)(5)(i) proposes a similar requirement that any materials used onboard, including any sacrificial anodes, that are subsequently discharged be used only in the amount necessary to perform their intended function.

EPA is proposing to continue the requirement from the VGP that any spaces between flush-fit anodes and the backing must be filled. This proposed standard is in consideration of the fact that niche areas on the hull are more susceptible to fouling as well as more difficult to clean and as such can become hotspots for fouling organisms.

EPA is not carrying forward the requirement from the VGP regarding the selection of sacrificial anode systems based on toxicity of the anode. The proposed approach is consistent with the technological evaluation performed for the VGP, which acknowledged that type of anode metal selected based on toxicity (magnesium, then aluminum, then zinc) may not be technologically feasible and/or economically practicable and achievable in many instances. EPA has recently learned of more situations where anode selection based on toxicity presents practical challenges. For example, in harbors or estuaries with high pollutant loads, zinc is the preferred anode material for vessels that spend time in those waters because of concerns with pollutants causing aluminum anodes to passivate and lose effectiveness. While EPA is not continuing this concept from the VGP, the Agency does continue to support operators considering toxicity as part of the anode selection process.

These proposed requirements represent a practicable and achievable approach to reducing discharges from this necessary hull protection operation.

EPA did consider requiring use of ICCP because these systems eliminate or reduce the need for sacrificial anodes. However, there is a risk of overprotecting using these systems (*e.g.,* embrittlement in high-strength vessels) or debonding of protective coatings, and operation of these systems generally should only be installed on vessels that are manned full-time by a highly skilled crew able to carefully monitor and maintain these systems. As such, the Agency recommends, but is not proposing to require, operators consider the use of ICCP in place of or to reduce the use of sacrificial electrodes when technologically feasible (*e.g.,* adequate power sources, appropriate for vessel hull size and design), safe, and adequate to protect against corrosion, particularly for new vessels.

5. Chain Lockers

Chain lockers are the storage area onboard for housing the vessel's anchor and chain. Water, sediment, biofouling organisms, and contaminants can enter and accumulate in the chain locker during anchor retrieval and precipitation events; the accumulation of water and other materials in the chain locker is often referred to as the chain locker effluent. This effluent can contain both conventional and nonconventional pollutants including ANS and residue from the inside of the locker itself, such as rust, paint chips, grease, and zinc. The sump collects these liquids and materials that enter the chain locker prior to discharge or disposal.

EPA endeavored to identify new technology and best management options for discharges from chain lockers; however, EPA did not identify new information or options since the development of the VGP. As such, EPA relied on the BPT/BCT/BAT analysis that led to the development of the VGP requirements and is proposing to require substantively the same standard of performance required by the VGP.

As required by the VGP, EPA proposes that vessel operators must perform BMPs that would reduce or eliminate chain locker effluent discharge. Specifically, EPA proposes that vessel operators must thoroughly rinse the anchor chain of biofouling organisms and sediments each time it is brought out of the water. Additionally, EPA proposes that the discharge of accumulated water and sediment from the chain locker is prohibited when the vessel is in port. Finally, although not required in the VGP, EPA is proposing that for all vessels that operate beyond the waters of the contiguous zone, anchors and anchor chains must be rinsed of biofouling organisms and sediment, prior to entering the waters of the contiguous zone. This requirement is intended to minimize the discharge of biofouling organisms when vessels that operate beyond waters of the contiguous zone re-enter these waters and subsequently drop anchor in waters of the United States or waters of the contiguous zone.

Finally, as discussed in VIII C. *Discharges Incidental to the Normal Operation of a Vessel—Specialized Areas,* EPA proposes to prohibit any discharge of accumulated water and sediment from any chain locker into federally-protected waters.

6. Decks

Deck discharges may result from deck runoff, deck wash down, or deck flooding. Deck runoff consists of rain and other precipitation and seawater which washes over the decks or well decks. Deck washdowns consist of cleaners and freshwater or saltwater. Deck flooding generally consists of seawater from the flooding of a docking well (well deck) on a vessel used to transport, load, and unload amphibious vessels, or freshwater from washing the well deck and equipment and vessels stored in the well deck. Deck washdown, runoff, and flooding discharges include those from all deck and bulkhead areas, and associated equipment. The constituents and volumes vary widely, are highly dependent on a vessel's purpose, service, practices, and may include both conventional and nonconventional pollutants such as oil, grease, fuel, cleaner or detergent residue, paint chips, paint droplets, and general debris.

EPA endeavored to identify new technology and best management options for discharges from decks; however, EPA did not identify any technology since the development of the

VGP. As such, EPA relied on the BPT/BCT/BAT analysis that led to the development of the VGP requirements and is proposing to require substantively the same requirements of the VGP.

EPA proposes that it is infeasible to set a specific numeric discharge standard for discharges from decks and well decks because of the variation in vessel size and associated deck surface area, the types of equipment operated on the deck, and limitations on space for treatment equipment. As such, EPA proposes that BMPs must be implemented to minimize the volume of discharges and the various pollutants from decks.

As required in the VGP, the proposed rule would require vessel operators to properly maintain the deck and bulkhead areas to keep the deck clean; prevent excess corrosion, leaks, and metal discharges; contain potential contaminants to keep them from entering the waste stream; and use environmentally safe products. Properly maintaining the deck would include the use of coamings or drip pans for machinery on the deck that is expected to leak or otherwise release oil, so that any accumulated oils from these areas can be collected and managed appropriately.

As required in the VGP, EPA also proposes that prior to performing a deck washdown and when underway, exposed decks must be kept broom clean, to remove existing debris and prevent the introduction of garbage or other debris into any waste stream. Broom clean means a condition in which the deck shows that care has been taken to prevent or eliminate any visible concentration of debris or garbage. Similarly, discharge of floating solids, visible foam, halogenated phenolic compounds, dispersants, surfactants, and spills must be minimized in any deck washdown water discharged overboard. Additionally, during deck washdown, the proposed rule would require that the washdown be conducted with minimally-toxic, phosphate-free, and biodegradable soaps, cleaners, and detergents. The proposed standard would also require that deck washdowns be minimized in port. Lastly, the proposed rule would require that where applicable by an international treaty or convention or the Secretary, a vessel must be fitted with and use physical barriers (*e.g.,* spill rails, scuppers, and scupper plugs) during any washdown to collect runoff for treatment.

Finally, as discussed in VIII C. *Discharges Incidental to the Normal Operation of a Vessel—Specialized Areas,* and as is required of medium and large cruise ships by the VGP, EPA proposes to prohibit the discharge of deck wash from all vessels into federally-protected waters.

7. Desalination and Purification Systems

Distilling and reverse osmosis plants also known as water purification plants or desalination systems, generate freshwater from seawater for a variety of shipboard applications. These include potable water for drinking, onboard services (*e.g.,* laundry and food preparation), and high-purity feedwater for boilers. The wastewater from these systems is essentially concentrated seawater with the same constituents of seawater, including dissolved and suspended solids and metals; however, anti-scaling, anti-foaming, and acidic treatments and cleaning compounds are also injected into the distillation system, and can be present in the discharge. As such, the wastewater can contain toxic, conventional, and nonconventional pollutants.

EPA endeavored to identify new technology and best management options for discharges from desalination and purification systems; however, EPA did not identify any new technology since the development of the VGP. As such, EPA relied on the BPT/BCT/BAT analysis that led to the development of the VGP requirements and is proposing to require substantively the same standard of performance required by the VGP.

EPA is proposing to modify the language used in the VGP associated with toxic and hazardous materials to add more clarity by proposing to prohibit discharges resulting from the cleaning of desalination or purification systems with hazardous or toxic materials.

8. Elevator Pits

Most vessels with multiple decks are equipped with elevators to facilitate the transportation of maintenance equipment, people, and cargo between decks. A pit at the bottom of the elevator collects liquids and debris from elevator operations. The liquid and debris that accumulates in the pits, often referred to as elevator pit effluent, can be emptied by gravity draining, discharged using the firemain, transferred to bilge, or containerized for onshore disposal. The effluent may contain toxic, conventional, and nonconventional pollutants such as oil, hydraulic fluid, lubricants, cleaning solvents, soot, and paint chips.

EPA endeavored to identify new technology and best management options for discharges from elevator pits; however, EPA did not identify any new technology since the development of the VGP. As such, EPA relied on the BPT/BCT/BAT analysis that led to the development of the VGP requirements and is proposing to require substantively the same standard of performance required by the VGP.

As required by the VGP, EPA proposes to prohibit the discharge of untreated accumulated water and sediment from any elevator pit.

9. Exhaust Gas Emission Control Systems

Exhaust gas emission control systems for reducing sulfur oxides (SO_X) and nitrogen oxides (NO_X) in marine exhaust can produce washwater and residues that must be treated or held for shore-side disposal. Two such systems are exhaust gas cleaning systems (EGCS) and exhaust gas recirculation (EGR) systems.

An EGCS is used primarily to remove SO_X from marine exhaust. Commonly referred to as ''scrubbers,'' these systems capture contaminants that can end up in washwater and residue that result from the scrubbing process. EGCS washwater is typically treated and discharged overboard. Residues are usually disposed of on-shore once the vessel is in port. Untreated EGCS washwater is more acidic than the surrounding seawater, and it contains toxic, conventional, and nonconventional pollutants including sulfur compounds, polycyclic aromatic hydrocarbons (PAHs), and traces of oil, NO_X, heavy metals, and captured particulate matter. Use of an EGCS to scrub emissions of SO_X also reduces the pH significantly primarily through the formation of sulfuric acid. In addition, the high volume of seawater that some vessels pump for the scrubbing process can result in higher turbidity in nearby waters, particularly in shallow areas.

The use of scrubbers on ships is in large part an outgrowth of international treaties for reducing sulfur emissions from marine exhaust. Under MARPOL standards and subsequent updates, as of January 2020, the highest permissible sulfur content of marine fuel globally is 0.5 percent. The allowable fuel sulfur content for vessels operating in Emission Control Areas has been further restricted to 0.1 percent as of January 2015. The United States is a signatory to the international treaties and is included in the North American Emission Control Area, meaning that the 0.1 percent limit for marine fuel sulfur content is currently in effect for vessels operating in the waters of the United

States or the waters of the contiguous zone.

MARPOL approved the use of an EGCS to achieve the international standards for marine emissions as an alternative to operating on low sulfur fuel. This approval spurred many vessel owners to install scrubbers in lieu of switching to costlier low sulfur fuels. Recent information from the international registrar and classification society Det Norske Veritas and Germanischer Lloyd (DNV GL, 2019) indicates that out of the total vessel universe, there are currently 3,000 ships with installed or firmly planned scrubber systems, with predictions ranging up to as many as 4,000 installations.

The two main ''wet'' scrubber EGCS technologies used on vessels for meeting the MARPOL marine emissions requirements are open-loop and closed-loop systems. Although use of scrubbers on ships is relatively recent, these systems are based on technologies deployed for land-based systems for controlling smokestack emissions and generally transfer well to ship-board use. Open-loop systems remove the contaminants from marine exhaust by running the exhaust through seawater sourced from outside the vessel and then discharging the resulting washwater back out to sea. In contrast, closed-loop systems use freshwater and inject caustic soda to neutralize the exhaust. A small portion of the washwater is bled off and treated to remove suspended solids, which are held for shore-side disposal. While this design is not completely closed-loop, it can operate in zero discharge mode for a period of time. Hybrid scrubbers are systems that can operate either in open- or closed-loop mode. Typically, at sea, these hybrid systems operate in open-loop mode, whereas in nearshore waters, harbors, and estuaries, they operate in closed-loop mode. Dry scrubbers are another type of EGCS; however, these systems do not generate wastewater, and hence would not be subject to these proposed requirements.

EGR systems are used to reduce NO_X emissions in marine exhaust. Vessels often use EGR systems to achieve the mandatory NO_X emissions limits set out in MARPOL Annex VI. These systems minimize NO_X production by cooling part of the engine exhaust gas and then redirecting it back to the engine air intake. The addition of the recirculated engine exhaust reduces the amount of oxygen available for fuel combustion, reducing peak combustion temperatures, resulting in significantly reduced NO_X formation. The cooling of the recirculated exhaust gas causes condensation of water vapor formed during combustion, generating a continuous wastewater stream (bleed-off water) from the condensate. This condensate can contain toxic, conventional, and nonconventional pollutants such as particulates (soot, metals, and hydrocarbons) and sulfur. In some cases, the EGR systems also capture oils, for example from cylinder lubrication, that are emitted from the combustion process which are collected as part of the scavenged air. Excess bleed-off water that accumulates in an EGR system is typically discharged overboard following treatment, and any residues are held for shore-side disposal. On vessels that use high-sulfur fuel and an EGCS, the EGR system bleed-off water is often combined with the EGCS washwater and processed as a combined waste stream.

EPA is proposing a standard for EGCS and EGR discharges based on IMO's guidelines for discharges from these two types of emission control systems. Specifically, the standard is largely based on the IMO 2015 Guidelines for Exhaust Gas Cleaning Systems (Resolution MEPC.259(68) and the IMO 2018 Guidelines for the Discharge of Exhaust Gas Recirculation (EGR) Bleed-Off Water (MEPC 307(73))). The IMO EGCS guidelines mostly focus on the air emissions of scrubbers; however, Section 10 of these guidelines sets out limits for five constituents in scrubber washwater: pH, PAH, turbidity, nitrates, and additives. Section 10 also includes handling and disposal criteria for scrubber residues. While the IMO criteria are guidelines rather than requirements, EPA is proposing to incorporate the discharge requirements of the IMO EGCS guidelines as EPA standards. With respect to discharges from EGR systems, the IMO EGR guidelines were based primarily on the IMO's own 2015 guidelines for EGCS discharges, with a few key differences in recognition of the composition of the EGR bleed-off washwater and the on-board process for handling this waste stream. The proposed standard reflects this parallel structure and retains the minor distinctions in the IMO EGR guidelines to accommodate differences between the two systems.

The proposed standard carries forward most of the VGP EGCS requirements, which were based largely on the 2009 version of the IMO EGCS guidelines. The key difference is that in an effort to harmonize EPA standards with the IMO guidelines to the extent possible, EPA proposes to amend the pH limit for discharges of EGCS washwater to 6.5 and is adding the additional IMO option for determining the limit based on either in-water measurement or a calculation-based methodology. In contrast, the VGP requirement is for EGCS washwater discharges to have a pH of no less than 6.0 as measured at the overboard discharge point. The VGP did not include specific requirements for discharges from EGR systems, in part because international awareness of the environmental effects of these discharges was not at the forefront of concerns relating to implementation of the NO_X emissions standards at the time.

As part of the effort to harmonize the EPA exhaust gas emission control systems discharge standards under the VIDA with the IMO guidelines, EPA has also reworded the phrasing of the proposed standard to harmonize more closely with the language in the IMO guidelines. In this context, EPA notes that in the exception proposed in section 139.18(b)(1)(i)(A) pertaining to the pH limit, the use of the word ''transit'' refers specifically to when a vessel is underway as part of entering or exiting port. Similarly, EPA notes that in section 139.18(b)(1)(i)(B), the pH discharge limit as determined either by measurement or computation applies to the vessel both when stationary as well as when underway. EPA elected not to include these clarifications so as to not diverge from the language in the IMO guidelines, but was able to confirm through consultation with IMO experts and technical staff that they reflect the original intent of the IMO guidelines.

As EPA acknowledged in the factsheet accompanying the 2013 VGP, the reason the VGP established a different pH limit for EGCS discharges from the IMO was that the NPDES permitting framework requires discharge limits to be set at the point of discharge. At the time, EPA determined that the 6.0 limit applied at the point of discharge maximized consistency with the IMO guideline for a pH of 6.5 four meters from the hull by accounting for the buffering ''likely to occur within the 4-meter range.'' Under the VIDA, in contrast, EPA no longer needs to account for the buffering because EPA is now proposing a standard of performance rather than a limit for a permit. The discharge standard continues to include the additional provision, consistent with the IMO guideline, that the maximum difference allowed between inlet and outlet during maneuvering and transit is 2.0 pH units.

EPA previously presented its BAT analysis for the EGCS limits for the other four parameters—PAH, nitrates, turbidity, and additives—as part of the NPDES permit issuance process. That analysis is not revisited here since the

only part of the proposed standard that differs from the 2013 VGP is the pH limit for EGCS washwater and that does not represent a change in a BAT factor such that revisiting the BAT analysis is necessary. EPA refers readers to the original BAT analysis accompanying the 2013 VGP for additional information.

EPA's BAT analysis determined that use of EGCS technologies to meet the proposed EGCS standard is economically achievable for several reasons. As was true when EPA first issued the VGP EGCS requirements in 2013, EGCS manufacturers already design their systems to meet the IMO guidelines, so any numeric discharge standard imposed by turning these guidelines into regulatory requirements will not result in any additional financial burden to operators. Second, given the current price differential between high and low sulfur fuels, use of an EGCS allows vessel operators to realize significant cost savings when using lower grade fuel with scrubbers compared to using more expensive, higher grade fuels with lower sulfur content. EPA also notes that the proposed pH numeric discharge standard will result in less confusion for the shipping community by harmonizing EGCS requirements with international guidelines as set out by IMO.

The Agency considered several other options for regulating EGCS discharges. However, existing technology alternatives to the proposed EGCS discharge standard are either impractical or expensive. For example, increased use of neutralization chemicals would introduce significant occupational and passenger safety issues because of chemical storage and handling issues. Modifying existing open-loop systems to hybrid systems (*i.e.,* that can also run in a closed-loop mode) would be another option; however, this retrofitting could cost an additional $3–5 million per vessel beyond the capital expenditures that vessel owners have already incurred for installing scrubbers in anticipation of the 2020 marine exhaust emissions limits. Yet another alternative would be to require vessels to switch from scrubbers to low sulfur fuel while in U.S. waters. Some vessels with scrubbers already switch to low sulfur fuels when in harbors or waters with sensitive ecosystems either in response to requests from port authorities or because of company policies to minimize seawater agitation. However, using low sulfur fuels for extended periods of time can be expensive. For example, EPA received estimates from cruise ship operators that suggests incremental costs per vessel for switching to low sulfur fuel can be as much as an additional $67,000 per week.

Another option considered was to ban discharges from scrubbers outright (*i.e.,* establish a zero-discharge standard for scrubbers). In fact, several port authorities and flag states, including Norway (''heritage fjords''), Fujairah (United Arab Emirates), Marseille, and Singapore have already banned use of open-loop scrubbers or discharges from open-loop scrubbers (U.S. EPA, 2020a). These restrictions are typically precautionary rather than based on data or modeling in the specific ports or regions in question (U.S. EPA, 2020a), leading the Agency to conclude that insufficient data exist at this time to warrant prohibiting these discharges under the Clean Water Act. Technical committees at the IMO are currently revisiting the need to perform additional assessments of environmental impacts from EGCS discharges, and EPA will continue to monitor the availability of research findings compiled in connection with these discussions.

EPA's proposed exhaust gas emission control standard also includes requirements for discharges of EGR bleed-off water and residues in recognition of the fact that they can exhibit low pH and contain other toxic, conventional, and nonconventional pollutants covered under the CWA. The requirements mirror those in the 2018 IMO EGR guidelines in that they largely include the same limits as listed in the 2015 IMO guidelines for EGCS discharges. EPA determined that shipboard technology for meeting these limits is readily available since the international marine community needed to address the requirements upon publication of the 2018 IMO EGR guidelines. As such, EPA has determined that the existing technology for meeting the limits is economically achievable, and EPA notes that the IMO has not received any indication from the maritime community that achieving the limits resulted in any undue economic burden or that alternative technologies for handling the EGR waste stream exist that merit investigation. The proposed standard includes the same prohibition as found in the IMO EGR guidelines for discharges of EGR bleed-off captured in holding tanks. The applicability of EPA proposed standard for EGR bleed-off however, would exclude when the vessel is underway and operating on fuel that meets the MARPOL Annex VI sulfur emissions requirements in effect starting in 2020. The applicability is slightly different from that in the IMO EGR guidelines which prohibit such discharges in harbors, estuaries, and polar waters whether underway or not. EPA is proposing to apply this standard consistent with how the Agency assessed and applied other requirements in the proposed rule; namely, the proposed standard considers whether a vessel is in port, underway, or outside of the waters of the United States and the waters of the contiguous zone. Lastly, the proposed standard for EGR does not include the IMO guideline exception for oil content in EGR bleed-off water since the same oil content numeric discharge standard is already required separately in section 139.6 of the proposed rule for all incidental discharges.

10. Fire Protection Equipment

Fire protection equipment includes all components used for fire protection including firemain systems, sprinkler systems, extinguishers, and firefighting agents such as foam. Firemain systems draw in water through the sea chest to supply water for fire hose stations, sprinkler systems, or firefighting foam distribution stations. Firemain systems can be pressurized or non-pressurized and are necessary to ensure the safety of the vessel and crew. The systems are also tested regularly to ensure that the system will be operational in an emergency. Additionally, firemain systems have numerous secondary purposes onboard vessels, such as for deck and equipment washdowns, machinery cooling water, and ballasting. However, whenever the firemain system is used for a secondary purpose, any resulting incidental discharge would be required to meet the proposed national standard of performance for secondary use (*e.g.,* deck runoff). Firemain water can contain a variety of constituents, including copper, zinc, nickel, aluminum, tin, silver, iron, titanium, and chromium. Many of these constituents can be traced to the corrosion and erosion of the firemain piping system, valves, or pumps.

Firefighting foams (fluorinated and non-fluorinated) can be added to a firemain system and mixed with seawater to address emergencies onboard a vessel. The constituents of firefighting foam can vary by manufacturer but can include persistent, bioaccumulative, toxic, and non-biodegradable ingredients. Discharges of firefighting foam can also contain phthalate, copper, nickel, and iron, which can be constituents in the composition of firemain piping. Fluorinated firefighting foam contains per- and poly-fluoroalkyl substances (PFAS) or their precursors; examples include aqueous film forming foam,

alcohol resistant aqueous film forming foam, film-forming fluoroprotein foam, fluoroprotein foam, alcohol-resistant fluoroprotein foam, and other fluorinated compounds. Non-fluorinated firefighting foam does not contain per- and poly-fluoroalkyl substances or their precursors; examples include protein foam, alcohol-resistant protein foam, synthetic fluorine free foam, and synthetic alcohol-resistant fluorine free foam. PFAS such as perfluorooctane sulfonate (PFOS) and perfluorooctanoic acid (PFOA), among others, are persistent, bioaccumulative, and potentially toxic and carcinogenic chemical compounds. Information regarding the presence of fluorinated surfactants and toxic or hazardous substances in firefighting foam are typically found on the safety data sheets for individual products. Additionally, other types of foams exist that can be used in fire equipment systems that are not intended for fire suppression but are designed for testing and training. These foams are often called testing or training foams, tend to be less expensive, and can mimic the properties of firefighting foams.

Consistent with the VGP, EPA is proposing requirements that apply to discharges from fire protection equipment during testing, training, maintenance, inspection, or certification. The proposed standard would not apply to the use of fire protection equipment in emergency situations or when compliance with such would compromise the safety of the vessel or life at sea (See section 139.1(b)(3)).

EPA proposes to prohibit any discharge from fire protection equipment during testing, training, maintenance, inspection, or certification in port with the exclusion of any USCG-required inspection or certification. EPA also proposes to prohibit the discharge of fluorinated firefighting foam during testing, training, maintenance, inspection, or certification with the exclusion of any USCG-required inspection or certification. Other options exist for testing, training, or maintenance such as testing without foam, collecting the foam such that it is not discharged, or, when foam is required, using a non-fluorinated foam (FFFC, 2020; NFPA, 2016). And according to the National Fire Protection Association (NFPA) there are many firefighting foams and training foams that are non-fluorinated that can be used for testing, training, and maintenance (FFFC, 2020; NFPA, 2016). However, the USCG has indicated that for certain USCG-required inspections and certifications discharges must occur in port and need to use fluorinated foams.

EPA also considered proposing more stringent requirements than the VGP in relation to the discharge of firefighting foam. Specifically, EPA explored proposing requirements that would include product substitution to use firefighting foams that do not contain bioaccumulative or toxic or hazardous materials. EPA has used product substitution for other technology-based rules such as those that apply to oil and gas. See 40 CFR part 435. As such, EPA considered, for the purposes of testing, training, maintenance, inspection or certification, also prohibiting the discharge of non-fluorinated firefighting foams that contain bioaccumulative or toxic or hazardous materials (as identified in 40 CFR 401.15 or defined in 49 CFR 171.8). Based on the *Best Practice Guidance for Use of Class B Firefighting Foams* from the Fire Fighting Foam Coalition (FFFC, 2020), NFPA codes and standards—NFPA 11—*Standards for Low-, Medium-, and High-Expansion Foam* (NFPA, 2016), and discussions with the USCG, testing and training methods exist that limit or eliminate the need to discharge foam (FFFC, 2020; NFPA, 2016). Specifically, in many situations it may be possible to perform these activities by only using water (water equivalency method), collecting the foam, or using non-fluorinated training foam that does not contain bioaccumulative or toxic or hazardous materials. EPA reviewed numerous foam Safety Data Sheets for bioaccumulative or toxic or hazardous materials and identified several potential foam options that vessels owners and operators may be able to use if the Agency moved forward with this approach in the final rule (EPA, 2020).

However, EPA was unable to compile adequate information on the availability and economic achievability considerations of using non-fluorinated foams that do not contain bioaccumulative or toxic or hazardous materials to justify proposing a requirement that would limit the types of non-fluorinated foams that could be used for testing, training, maintenance, inspection or certification. As such, EPA is soliciting feedback and additional information on the availability and economic achievability of expanding the prohibition on the discharge of firefighting foam to include non-fluorinated foam that contains bioaccumulative or toxic or hazardous materials. If it is found to meet the applicable statutory requirements, the final standard would prohibit the discharge of both fluorinated foams and non-fluorinated foams that contain bioaccumulative or toxic or hazardous materials during testing, training, maintenance, inspection or certification with the exception of USCG-required inspection and certification. Specifically, EPA is interested in feedback on: (1) The availability of non-fluorinated foams, training foams, or surrogate test liquids that do not contain bioaccumulative or toxic or hazardous materials that can satisfy firefighting testing, training, and maintenance needs, (2) the extent to which vessels are already using these alternative foams, (3) the extent to which vessels are already performing testing, training, and maintenance using only water, (4) the number of vessels and types of systems that are not able to use the water-equivalency method, (5) the extent to which the vessel community is collecting foam prior to discharge, (6) economic considerations associated with prohibiting the discharge of these types of non-fluorinated firefighting foams, and any other information that would support the Agency's determination of whether to expand the prohibition of the discharge of firefighting foams to include non-fluorinated foams that contain bioaccumulative or toxic or hazardous materials.

Finally, as discussed in VIII C. *Discharges Incidental to the Normal Operation of a Vessel—Specialized Areas,* and as required by the VGP, EPA proposes additional controls for discharges from fire protection equipment for testing, training, and maintenance purposes for vessels operating in federally-protected waters.

11. Gas Turbines

Gas turbines are used on some vessels for propulsion and electricity generation. Occasionally, they must be cleaned to remove by-products that can accumulate and affect their operation. The by-products and cleaning products can include toxic and conventional pollutants including salts, lubricants, combustion residuals, naphthalene, and other hydrocarbons. Additionally, due to the nature of the materials being cleaned, there is a higher probability of heavy metal concentrations. Rates and concentrations of gas turbine wash water discharge vary according to the frequency of washdown and under most circumstances vessel operators can choose where and when to wash down gas turbines.

EPA endeavored to identify new technology and best management options for discharges from gas turbines; however, EPA did not identify any new technology since the development of the VGP. As such, EPA relied on the BPT/

BCT/BAT analysis that led to the development of the VGP requirements and is proposing to require substantively the same standard of performance required by the VGP.

As was required by the VGP, EPA proposes requirements that apply to discharges from the washing of gas turbine components. EPA proposes to prohibit the discharge of untreated gas turbine washwater unless determined to be infeasible.

12. Graywater Systems

Graywater is water drained or collected from showers, baths, sinks, and laundry facilities. Graywater discharges can contain bacteria, pathogens, oil and grease, detergent and soap residue, metals (*e.g.,* cadmium, chromium, lead, copper, zinc, silver, nickel, mercury), solids, and nutrients. Some vessels have the capacity to collect and hold graywater for later treatment and discharge. Vessels that do not have graywater holding capacity continuously discharge it to receiving waters. The volume of graywater generated by a vessel is dependent on the number of passengers and crew. It is estimated that, in general, 30 to 85 gallons of graywater is generated per person per day. Estimates of graywater generation by cruise ships that can accommodate approximately 3,000 passengers and crew range from 96,000 to 272,000 gallons of graywater per day or 1,000,000 gallons per week.

Many elements of the proposed standard, including certain BMPs, mirror those found in the VGP. For example, under the proposed General Operation and Maintenance standard the operators of all vessels are required to minimize the discharge of graywater. Minimization can include reducing the production of graywater, holding the graywater onboard, or using a reception facility. Additionally, as required by the VGP, minimally-toxic, phosphate-free, and biodegradable soaps, cleaners, and detergents must be used if they enter the graywater system. The proposed standard also requires vessels to minimize the introduction of kitchen oils and food and oil residue to the graywater system. Also, as would be required for all discharges in section 139.4(b)(2) of the proposed rule, vessels must discharge while underway when practical and as far from shore as practical. This storage requirement is particularly relevant for graywater as many vessels have graywater storage capabilities onboard that allow for graywater to be stored and either discharged to a reception facility or held until underway and as far from shore as practical.

For non-Great Lakes vessels, the numeric effluent requirements from the VGP have remained the same with one exception. The proposed standard does not include the percent removal requirements for BOD and TSS from the VGP. The percent removal requirement, which is based on secondary treatment regulations for domestic sewage, is not necessary for graywater discharges because there is greater ability to control the contribution of BOD and TSS onboard a vessel.

As in the VGP, EPA is not proposing graywater discharge standards for commercial vessels in the Great Lakes consistent with CWA Section 312(a)(6) that specifies the term ''sewage,'' with respect to commercial vessels on the Great Lakes, shall include graywater. As such, graywater discharges from commercial vessels on the Great Lakes are subject to the requirements in CWA Sections 312(a)–(m) and the implementing regulations at 40 CFR part 140 and 33 CFR part 159.

Non-commercial vessels operating on the Great Lakes may only discharge graywater if the discharge is treated such that it does not exceed 200 fecal coliform forming units per 100 milliliters and contains no more than 150 milligrams per liter of suspended solids. This is because the Agency determined that graywater treatment using an existing system meeting the 40 CFR part 140 standards represents the appropriate level of control for those vessels operating in the Great Lakes that do not hold their graywater for onshore disposal. Hence, either treatment devices or adequate holding capacity are available and used for managing graywater from vessels operating on the Great Lakes.

As in the VGP, the numeric discharge standard would apply to the discharge from any passenger vessel with overnight accommodations for 500 or more passengers (identified as a ''large cruise ship'' in the VGP), as well as any passenger vessel with overnight accommodations for 100–499 passengers (identified as a ''medium cruise ship'' in the VGP) unless the vessel was constructed before December 19, 2008 and does not voyage beyond 1 NM from shore, such as is often the situation for older river cruise vessels.

In preparing the proposed standard, EPA endeavored to identify new technology and BMPs for graywater discharges or applicability of existing technologies and practices to different classes of vessels than had been subject to similar requirements in the VGP. Hereafter, this section describes proposed requirements for graywater systems that are new or modified from the VGP. First, EPA proposes to prohibit the discharge of graywater within 3 NM from shore for any vessel that voyages at least 3 NM from shore and has remaining available graywater storage capacity, unless the discharge meets the standards in section 139.21(f) of the proposed rule. Similarly, EPA proposes to prohibit the discharge of graywater within 1 NM from shore from any vessel that voyages at least 1 NM but not more than 3 NM from shore and has remaining available graywater storage capacity, unless the discharge meets the standards in section 139.21(f) of the proposed rule. Also, EPA is proposing that the discharge of graywater from any new vessel of 400 gross tonnage (GT ITC) and above, and any new ferry authorized by the USCG to carry 250 or more people would be required to meet the numeric discharge standard in section 139.21(f) of the proposed rule. Such vessels could be equipped either with a treatment system or sufficient storage capacity to retain all graywater onboard while operating in waters subject to the proposed rule. The costs of these proposed requirements as compared to those in the VGP are described in the regulatory impact analysis for the proposed rule. EPA expects these new requirements would reduce the discharge of various pollutants without a significant increase in compliance costs. EPA believes the proposed standard, while more stringent than existing requirements under the VGP, is appropriate and has been demonstrated to be technologically available and economically achievable. Based on VGP reporting data, between one-third and one-half of manned vessels of 400 GT ITC or above that are not cruise ships or ferries are equipped with a treatment system for graywater, graywater mixed with sewage, or a combined treatment system that may treat graywater. As such, the data for existing vessels indicate that it is an appropriate requirement for new build vessels in this category to install a treatment system or storage capacity. EPA expects that vessels built with storage capacity may be serviced by stationary and mobile (*e.g.,* trucks and barges) pumpout facilities that currently receive sewage and graywater from vessels and welcomes public comment on the availability of such facilities for vessels unable to install treatment systems.

Additionally, as required by the VGP, EPA proposes additional controls for discharges of graywater for vessels operating in federally-protected waters as discussed in VIII C. *Discharges*

Incidental to the Normal Operation of a Vessel—Specialized Areas.

In evaluating options for graywater treatment, EPA reaffirmed that treatment of commingled graywater and sewage by an ''advanced wastewater treatment system (AWTS),'' a sophisticated marine sanitation device, produces significant constituent reductions in the resulting effluent. AWTS differ from traditional treatment systems in that they generally employ enhanced methods for treatment, solids separation, and disinfection, such as through the use of membrane technologies and UV disinfection. AWTS are currently in wide use and economically achievable for certain vessel classes. For example, the Cruise Lines International Association (2019) reports that 68 percent of member lines' global fleet capacity is currently served by AWTS. Also, all new ships on order by member lines will be equipped with AWTS. In Alaska, under the existing ''Large Cruise Ship General Permit,'' certain large commercial passenger vessels may only discharge wastewater (including sewage and graywater) that has been treated by an AWTS or equivalent system. As such, the numeric discharge standard included in the proposed standard, which was also present in the VGP, is based on the performance of these treatment systems.

The proposed time period for the application of the numeric discharge standard for graywater differs from that presented earlier for ballast tanks. For graywater systems, EPA proposes a monthly average numeric discharge standard, a commonly used metric for establishing numeric effluent discharge limits. While daily maximums are also frequently used, EPA is not proposing to include daily maximums in the standard. Monitoring discharges onboard a vessel presents unique challenges compared to monitoring discharges from land-based facilities for which numeric effluent discharge limits are typically established. For ballast tanks, however, EPA proposes the use of instantaneous maximums. As indicated in the ballast tanks section, the challenges associated with collecting and testing representative samples of ballast water at the time of discharge required a different approach. Systems that are designed to meet an instantaneous maximum require a higher level of control, and therefore less variability, in the system. Since the discharge of ballast water carries the risk of establishing ANS, the use of an instantaneous maximum is preferred over the use of a long-term average where the upper bounds of variability in the discharge may be problematic.

Graywater discharges, on the other hand, do not carry the same level of risk. As such, the numeric discharge standard proposed in section 139.21(f) uses monthly averages to allow for the variability that is expected in a well-operated treatment system. At the same time, the monthly averages require the vessel operator to remain vigilant to ensure that, despite this variability, discharges consistently meet the numeric limit. Vessels to which the standard applies would be expected to operate treatment systems that can consistently achieve compliance with the monthly average based on the vessel's expected loadings. Pursuant to the general operation and maintenance standards of the proposed rule, vessels are expected to discharge while underway when practical and as far from shore as practical. This encourages commingling of the graywater constituents and further decreases the risks associated with variability in the system. EPA recognizes that the option to install AWTS or sufficient holding capacity may be unavailable for certain vessels for such reasons as cost, stability of the vessel, or space constraints. As such, EPA does not propose that all vessels be required to treat graywater discharges to the limits found in section 139.21(f) of the proposed rule.

13. Hulls and Associated Niche Areas

Coatings

Vessel hulls are often coated with antifouling compounds to prevent or inhibit the attachment and growth of biofouling organisms. Selection, application, and maintenance of an appropriate coating type and thickness according to vessel profile is critical to effective biofouling management, and therefore preventing the introduction and spread of ANS from the vessel hull and associated niche areas. Multiple types of coatings are available for use, including hard, controlled depletion or ablative, self-polishing copolymer, and fouling release coatings. Coatings may employ physical, biological, chemical, or a combination of controls to reduce biofouling. Those that contain biocides prevent the attachment of biofouling organisms to the vessel surface by continuously leaching substances that are toxic to aquatic life. The most commonly used biocide is copper. Manufacturers may also combine copper with other biocides, often termed ''booster biocides,'' to increase the effectiveness of the coating. Cleaning the coating results in pulses of biocide into the environment, particularly if surfaces are cleaned within the first 90 days following application.

The proposed rule would require that the selection of a coating for the hull and associated equipment must be specific to the vessel's operational profile, including biocidal coatings, that have effective biocide release rates and components that are biodegradable once separated from the vessel surface. Operational profile factors can influence biofouling rates and include the vessel speed during a typical voyage, aquatic environments traversed, type of surface painted, typical water flow for any hull and niche areas, planned periods between drydock, and expected periods of inactivity or idleness. Generally, an optimal biocide will have broad spectrum activity, low mammalian toxicity, low water solubility, no bioaccumulation up the food chain, no persistence in the environment, and compatibility with raw materials (IMO, 2002). EPA is aware that non-biocidal coatings are available, and vessels that typically operate at high speeds may effectively manage biofouling with fouling release coatings. Additionally, vessels traveling in waters with lower biofouling pressure and those that spend less time at dock are expected to have a lower biofouling rate and should select either non-biocidal coating or coatings with low biocide discharge rates. However, these coatings may not be suitable for all operational profiles.

Adhering to manufacturer specifications is necessary to ensure the longevity and effectiveness of the coating and is considered best practice. If a coating is not properly selected, applied, or maintained, it will likely show signs of deterioration, such as indications of excessive cleaning actions (*e.g.,* brush marks) or blistering due to the internal failure of the paint system. Such excessive deterioration may allow for biofouling organisms to grow on exposed surfaces, increasing the risk of introduction and spread of ANS. Improper application and maintenance of the coating may also increase the discharge of particles into the aquatic environment and degradation of the integrity of wetted surfaces. The VGP required that any antifouling coatings be applied, maintained, and removed consistent with the FIFRA label, if applicable. The proposed rule would similarly require that coatings be applied, maintained, and reapplied consistent with manufacturer specifications, including the thickness, the method of application, and the lifespan of the coating. One way to achieve this proposed requirement is to schedule the in-service period of the coating to match the vessel's drydock cycles. Larger vessels, particularly those

used in the carriage of goods, are required to adhere to requirements for safety inspections and maintenance activities that dictate how frequently they must be drydocked. Factoring this schedule into the coating selection ensures the coating will sufficiently protect the vessel for the period needed without creating additional leachate or wastes.

Tributyltin (TBT) Requirements

The International Convention on the Control of Harmful Anti-fouling Systems on Ships (AFS Convention) was adopted in 2001 and came into force in 2008. The United States became a contracting party to the AFS Convention on November 21, 2012. Domestically, the Clean Hull Act of 2009 implements the requirements of the AFS Convention. Consistent with the AFS Convention, the Clean Hull Act, and the VGP, the proposed rule reaffirms that coatings on vessel hulls must not contain TBT or any other organotin compound used as a biocide. Additionally, the proposed rule states that any vessel hull previously applied with a hull coating containing TBT (whether or not used as a biocide) or any other organotin compound (if used as a biocide) must either maintain an effective overcoat on the vessel hull so that no TBT or other organotin leaches from the vessel hull or remove any TBT or other organotin compound from the vessel hull. EPA is unaware of any non-biocidal use of TBT which would result in a residual presence in antifouling paints; therefore, EPA reaffirms a zero-discharge standard of TBT from vessel hulls. EPA expects that few, if any, vessels have exposed TBT coatings on their hulls and that a zero-discharge standard for all organotin compounds, including TBT, is technologically achievable based on the availability of other antifouling coating options. This standard is also economically achievable because few, if any, vessels still use TBT as an antifoulant.

Other less toxic organotin compounds such as dibutyltin oxide are used in small quantities as catalysts in some biocide-free coatings. One class of biocidal-free coatings, which are sometimes referred to as fouling release coatings, produce a non-stick surface to which fouling organisms cannot firmly adhere. To function properly, the coating surface must remain smooth, intact, and not leach into the surrounding water. Because these less toxic organotins are used as a catalyst in the production of biocide-free coatings, such production may result in trace amounts of organotin in antifouling coatings. Consistent with the AFS Convention, the Clean Hull Act, and the VGP, EPA proposed rule would authorize the use of non-biocidal coatings that contain trace amounts of catalytic organotin (other than TBT) if the trace amounts of organotin are not used as a biocide. When used as a catalyst, EPA proposed rule states that an organotin compound must contain less than 2,500 mg total tin per kilogram of dry paint and must not be designed to slough or otherwise peel from the vessel hull, noting that incidental amounts of a coating discharged by abrasion during cleaning or after contact with other hard surfaces (*e.g.,* moorings) are acceptable.

Cybutryne Requirements

Cybutryne, commonly known as Irgarol 1051, is a biocide that functions by inhibiting the electron transport mechanism in algae, thus inhibiting growth. There are numerous commercially-available antifoulants that are similar in cost and have a much lower negative impact on the aquatic environment (IMO, 2018). Restrictions on cybutryne are already in place in a number of countries globally, and cybutryne is therefore less widely used in comparison to other antifoulants (IMO, 2017). Coatings that do not contain cybutryne are both technologically available and economically achievable. Therefore, EPA proposes to prohibit the application of cybutryne-containing coatings on hulls and niche areas. In cases where cybutryne coatings have been applied previously to a vessel, EPA proposes an effective overcoat must be applied and maintained so that no cybutryne leaches from the vessel hull, noting that incidental amounts of coating discharged by abrasion during cleaning or after contact with the other hard surfaces are acceptable. EPA is aware that overcoats are commercially available.

Copper Requirements

Copper, primarily in the form of cuprous oxide, is the most common biocide in antifouling coatings, accounting for approximately ninety percent of the volume of sales of specialty antifouling biocides in the United States (U.S. EPA, 2018). Copper is a broad-spectrum biocide that effectively prevents both micro- and macrofouling. Copper is considered less harmful to the aquatic environment than TBT-containing compounds, but its use has nevertheless contributed to loadings in copper-impaired waters. Consistent with the VGP, EPA proposes to require that, as appropriate based on vessel class and operations, alternatives to copper-based coatings be considered for vessels spending 30 or more days per year in copper-impaired waters or using these waters as their home port. However, despite the potential impacts of copper-based coatings, there is a concern that replacement of copper with other biocides may cause different, and potentially more harmful, environmental impacts. EPA determined that there are no direct substitutions for copper as a biocide that are as affordable or as effective, without posing similar risks to non-target aquatic species (U.S. EPA, 2018). As such, EPA is not proposing to require the selection of an alternative antifouling coating to copper antifouling coating for vessels.

The significance of the discharges from a biocidal coating depends not only on the substance used, but also on the ''leaching rate'' of the biocide (IMO, 2009). In other words, the rate of discharge or entry into the environment from the coating itself. While the rate at which copper leaches from coatings is relatively slow (average discharge rates range from 3.8–22 $\mu g/cm^2/day$), copper-containing coatings can account for significant accumulations of metals in receiving waters of ports where numerous vessels are present (Valkirs et al., 2003; Zirino and Seligman, 2002). EPA is aware that maximum leach rates for copper-based antifouling paints on recreational vessels have been established both federally and locally. However, EPA does not currently have the data available to establish a leach rate that would be appropriate for the wide variety of vessels covered under the VIDA. Therefore, the proposed rule does not require a specific, maximum copper leach rate for antifouling coatings, acknowledging that use of antifouling coatings is also regulated in the United States. through FIFRA. At this time, EPA invites comment as to what maximum leach rates would sufficiently prevent biofouling while restricting the discharge of copper into the aquatic environment, recognizing that different leach rates may be required depending on the vessel profile, and according to the differentiations designated by the VIDA (*e.g.,* vessel size, class, type, and age).

Cleaning

Most commercial vessels are required to undertake periodic hull surveys as part of International Association of Classification Societies rules and in accordance with IMO conventions. Whenever possible, EPA suggests that drydock cleaning is the preferred BMP to in-water hull and niche cleaning. Drydock schedules should be factored

into the inspection and management of areas susceptible to biofouling.

EPA recognizes that in many instances it is not technologically available or economically achievable for a vessel to be drydocked outside of the regular schedule to clean biofouling from the hull or niche areas. Some vessels are too large to be regularly removed from the water, and any repair or maintenance required on the hull or niches must occur while the vessel is pier-side between drydockings. Therefore, EPA believes the Act does not require the prohibition of in-water cleaning at this time. In-water cleaning that is conducted as a preventative measure can be an important component of biofouling management. Preventative in-water cleaning is the frequent, gentle cleaning of the vessel hull and appendages to prevent the growth of biofouling organisms, with minimal impacts to the antifouling system. However, EPA also recognizes that there may be places where in-water cleaning should not occur, notably in federally-protected waters, based on the unique resources present in those areas.

Studies have estimated that even a biofilm can increase the drag on a vessel by up to 25 percent (Townsin, 2003; Schultz, 2007). Predictive analytics have shown that frequent cleaning reduces fuel consumption and that increasing cleaning to an interval of approximately six months can save hundreds of thousands of dollars per vessel in fuel costs (Marr, 2017). Therefore, conducting preventative cleaning can reduce drag, enhance operations, and reduce the discharge of ANS. Additionally, preventative cleaning has been shown to effectively reduce biofouling without significantly increasing biocide loading into the aquatic environment (Tribou and Swain, 2017). In contrast, macrofouling requires more abrasive removal techniques, which may damage the antifouling coating, resulting in a higher tendency for subsequent biofouling as well as a larger pulse of biocides and particles into the aquatic environment. Additionally, macrofouling (FR >20) is composed of more diverse and mature organisms and, depending on geographic origin, may present a greater risk of discharging ANS than a slime layer.

The VGP required that vessel owners/operators minimize the transport of attached living organisms when traveling into U.S. waters from outside the Economic Exclusive Zone or between COTP Zones using techniques such as selecting and maintaining an appropriate anti-fouling management system; in water inspections, cleaning, and maintenance of hulls; and thorough hull and niche area cleaning when the vessel is in drydock. The VGP also required that vessel owners/operators who remove biofouling organisms from hulls while the vessel is waterborne employ methods that minimize the discharge of fouling organisms and antifouling coatings. Such methods include the use of appropriate cleaning brush or sponge rigidity to minimize removal of antifouling coatings and biocide releases into the water column; limiting the use of hard brushes and surfaces for the removal of hard growth; and when available and feasible, use of a vacuum or other control technology to minimize the release or dispersion of antifouling coatings and fouling organisms into the water column. The VGP also prohibited the in-water cleaning of hulls coated with copper-based anti-fouling paints in copper-impaired waters within the first 365 days after paint application unless there is a significant visible indication of hull fouling.

Consistent with the VGP, EPA is proposing that vessel hulls and niche areas must be cleaned regularly to minimize biofouling (*i.e.,* grooming or preventative cleaning). Regular cleaning to minimize biofouling is considered an industry best practice, in large part due to the economic incentive involved: Costs associated with regular in-water cleaning, including the cleaning services, disruptions to a ship's schedule, and staff time, are outweighed by the fuel savings that result from a low fouling rating (FR) as that term is defined in the proposed regulations; reductions in fouling from FR–20 to FR–10 have been estimated to generate hundreds of thousands of dollars in fuel savings annually per ship. Several mechanisms are utilized by vessel owners to determine the necessary intervals of such cleanings, including regular inspections, ISO standard 19030 measurements of hull and propeller performance, and/or advanced data analytics. Further, many technologies are available for preventative in-water cleaning, including diver-operated technologies or remotely operated vehicles. A review of the market of hull cleaning robots sponsored by the USCG in 2016 identified no fewer than 15 technologies capable of conducting in-water cleaning of vessel hulls. More recently, remotely operated vehicles for preventative cleaning have also been developed as equipment attached to the vessel itself, enabling flexibility in cleaning schedule along a vessel's route.

Additionally, consistent with the VGP, the proposed rule would also require that the cleaning methods used cause no or minimal damage to the underlying coating, ensuring that the coating is not degraded and the release of biocide into the aquatic environment is minimized. These requirements are considered best practice and would ensure the longevity and effectiveness of the coating and minimize the pollutant loading into the surrounding environment.

EPA is also proposing to prohibit in-water cleaning of biofouling that exceeds a fouling rating of FR–20, except in the following two circumstances: (1) When the fouling is local in origin and cleaning does not result in the substantial removal of a biocidal antifouling coating, as indicated by a plume or cloud of paint; or (2) when an in-water cleaning and capture (IWCC) system is used that is designed and operated to capture coatings and biofouling organisms; filter biofouling organisms from the effluent, and minimize the release of biocides. Pursuant to this proposed standard, fouling is considered to be local if a vessel follows a 'clean-before-you-go' strategy, whereby in-water cleaning is conducted prior to leaving a port on fouling accumulated in that port. If IWCC systems are used, discharge of any wastes filtered or otherwise removed from the system is prohibited. Also, understanding that IWCC systems may not be available in many ports, EPA recommends, but does not propose to require, the use of IWCC systems for removal of local macrofouling.

IWCC systems reduce the discharge of fouling organisms and coating particles into the surrounding environment, and allow solids removed from the vessel hulls to be collected and disposed of onshore. Cleaning of hulls and niche areas, such as with IWCC systems, is necessary for vessel maintenance, and therefore the discharge of treated or filtered effluent from these systems is considered incidental to the normal operation of a vessel and authorized under the VIDA. IWCC discharges result ''from a protective, preservative . . . application to the hull of the vessel'' (33 U.S.C. 1322(a)(12)(A)(i)). Vessels following effective biofouling management strategies generally should be able to maintain fouling at or below an advanced slime layer. Therefore, use of such IWCC systems would primarily occur either to remove fouling that is local in origin (*e.g.,* after periods of idleness) or in contingency scenarios. Technologies to remove and capture biofouling have emerged since the last VGP issuance. These technologies are available and becoming common practice globally. To date, EPA has identified four companies that have

designed IWCC systems, operating in more than 15 countries and across six continents. This international information is relevant to this sector because a significant number of vessels to which this rule applies operate internationally. EPA anticipates that this technology will continue to improve and become more widely available. Similar to proactive cleaning, IWCC devices are advertised as being capable of providing hundreds of thousands of dollars in fuel savings annually to many vessel owners and operators, and thus there is an economic incentive independent of this rule driving their use. Additionally, the shipping industry has outlined the lack of approved in-water cleaning facilities as an impedance to effective biofouling management, resulting in ships increasingly cleaning offshore and in open waters, which bring added safety concerns. The primary challenge with using an IWCC is not the lack of technologies themselves, but regulatory frameworks that do not allow for these technologies to be used in various areas around the world. Removal of regulatory obstacles associated with the use of IWCC will afford vessel owners and operators with the opportunity to realize operational savings associated with maintaining a clean hull. As such, EPA expects that regular cleaning of biofouling consisting of FR–20 or below, in combination with the potential for controlled cleaning of biofouling exceeding FR–20 through IWCC devices, represents best available technology economically achievable to control the release of ANS and biocides from vessel hulls and associated niche areas, with likely long term cost savings to the vessel industry.

In line with the VGP, EPA is also proposing to minimize discharges of copper to aquatic ecosystems by restricting the in-water cleaning of vessels coated with copper-based antifouling paints in copper-impaired waters within the first 365 days after paint application. The proposed rule would allow in-water cleaning of copper-based coatings in copper-impaired waters within the 365 days following application only in circumstances when an IWCC system consistent with the aforementioned specifications is used. EPA understands that biocidal coatings are generally designed to remain free of fouling for the 365 days after application, prior to requiring in-water hull cleaning. Additionally, the majority of copper-impaired waters within the United States are streams, creeks, and rivers which generally have lower fouling pressure in comparison to warmer, marine waterbodies, and therefore vessels primarily operating in these waters would likely not require cleaning within the 365 days following application of the coating. For vessels operating in the few copper-impaired areas of coastal waterbodies in the United States, there remains the option to either conduct cleaning at a nearby, non-impaired port or to employ the use of an IWCC system as described above. Although it is unlikely that a vessel with a copper-based coating will have to clean within a copper-impaired water during the 365 days following application, EPA has further determined that there are alternatives to copper-based coatings that are available for use, which, over the coating lifespan would result in costs comparable to copper-based coatings.

Additionally, EPA proposes to prohibit in-water cleaning on any section of a biocidal antifouling coating which has shown significant deterioration since the most recent application of the coating. Such a level of deterioration indicates failure at the anticorrosive/antifouling interface which can result in a soft blister that is more likely to be broken by cleaning. Cleaning of paint that has reached this level may cause rupturing of paint blisters, which not only results in discharges of coating particles, but also increases the rate of damage to the anti-fouling system more generally. In turn, the exposed surface is subject to increased fouling and risk of corrosion. EPA expects that an antifouling system selected in accordance with the vessel's operating profile, and cleaned with minimally abrasive cleaning methods, should not present signs of significant deterioration at the anticorrosive/antifouling interface, therefore adherence to this standard is achievable by following the coating and cleaning practices in the proposed guidelines.

Consistent with proposed requirements for detergents used for deck washdown in this proposed rule and the VGP, EPA proposes that cleaning agents used on vessel surfaces that maintain direct contact with ambient waters, such as the scum lines of the hull, must be minimally-toxic, phosphate-free, and biodegradable. Finally, as proposed in section 139.40, EPA proposes additional controls for discharges from in-water cleaning when vessels are operating in federally-protected waters.

14. Inert Gas Systems

Inert gas is used on tankers for several reasons, with one of the primary uses being to control the oxygen levels in the atmosphere in the cargo and ballast tanks to prevent explosion and suppress flammability. Inert gas system discharges consist of scrubber washwater and water from deck water seals when used as an integral part of the inert gas system.

EPA endeavored to identify new technology and best management options for inert gas system discharges; however, EPA did not identify any new technology since the development of the VGP. As such, EPA relied on the BPT/BCT/BAT analysis that led to the development of the VGP requirements and is proposing to require substantively the same standard of performance required by the VGP.

As required by the VGP, EPA proposes that all inert gas scrubber washwater and water from deck seals must meet all of the requirements identified in the general discharge standards, and notably, requirements for oily discharges, including requirements set forth in MARPOL Annex I, EPA oil regulations, and USCG oil regulations as appropriate for the vessel.

15. Motor Gasoline and Compensating Systems

Motor gasoline and compensating discharge is the discharge of seawater that is taken into motor gasoline tanks to replace the weight of fuel as it is used and eliminate free space where vapors could accumulate. The compensating system is used for fuel tanks to supply pressure for the gasoline and to keep the tank full to prevent potentially explosive gasoline vapors from forming. The seawater is discharged when the vessel refills the tanks with gasoline or when performing maintenance. The discharge can contain both toxic and conventional pollutants including residual oils or traces of gasoline constituents, which can include alkanes, alkenes, aromatics (*e.g.,* benzene, toluene, ethylbenzene, phenol, and naphthalene), metals, and additives. Most vessels by design do not produce this discharge.

EPA endeavored to identify new technology and best management options for motor gasoline and compensating discharges; however, EPA did not identify any new technology since the development of the VGP. As such, EPA relied on the BPT/BCT/BAT analysis that led to the development of the VGP requirements and is proposing to require substantively the same standard of performance required by the VGP.

As required by the VGP, EPA proposes that all motor gasoline and compensating discharge must meet the requirements identified in the general

discharge standards, and notably, requirements for oily discharges, including requirements set forth in MARPOL Annex I, EPA oil regulations, and USCG oil regulations as appropriate for the vessel.

Finally, as discussed in VIII C. *Discharges Incidental to the Normal Operation of a Vessel—Specialized Areas,* and as required by the VGP, EPA proposes several additional controls for discharges from motor gasoline and compensating systems from a vessel operating in federally-protected waters.

16. Non-Oily Machinery

Non-oily machinery wastewater is the combined wastewater from the operation of distilling plants, water chillers, valve packings, water piping, low- and high-pressure air compressors, propulsion engine jacket coolers, fire pumps, and seawater and potable water pumps. Non-oily machinery wastewater systems are intended to keep wastewater from machinery that does not contain oil separate from wastewater that has oil content. Non-oily machinery wastewater discharge rates vary by vessel size and operation type, ranging from 100 to 4,000 gallons per hour. Constituents of non-oily machinery wastewater discharge can include a suite of conventional and nonconventional pollutants including metals and organics.

EPA endeavored to identify new technology and best management options for discharges of non-oily machinery wastewater; however, EPA did not identify any new technology since the development of the VGP. As such, EPA relied on the BPT/BCT/BAT analysis that led to the development of the VGP requirements and is proposing to require substantively the same standard of performance required by the VGP.

As required by the VGP, EPA proposes that the discharge of untreated non-oily wastewater and packing gland or stuffing box effluent that contains toxic or bioaccumulative additives or the discharge of oil in such quantities as may be harmful is prohibited.

17. Pools and Spas

Cruise ships and other vessels occasionally have pools or spas onboard that use water treated with chlorine or bromine as a disinfectant. When pools or spas are drained, the water is discharged overboard or sent to an advanced wastewater treatment system. The discharge water can contain nonconventional pollutants such as bromine and chlorine.

EPA endeavored to identify new technology and best management options for pool and spa wastewater; however, EPA did not identify any new technology since the development of the VGP. As such, EPA relied on the BPT/BCT/BAT analysis that led to the development of the VGP requirements and is proposing substantively similar requirements as the VGP. EPA determined the dechlorination limits by using those established for ballast water treatment systems and by evaluating comments submitted by the public on the 2008 and 2013 VGPs that indicated such limits are achievable. Furthermore, the proposed numeric discharge standard is consistent with common dechlorination limits from shore-based sewage treatment facilities.

The proposed standard would require vessel operators to discharge while underway and dechlorinate and/or debrominate any pool or spa water, except for unintentional or inadvertent releases from overflows across the decks and into overboard drains, prior to discharging overboard. To be considered dechlorinated, the total residual chlorine in the pool or spa effluent must be less than 100μg/L. To be considered debrominated, the total residual oxidant in the pool or spa effluent must be less than 25μg/L. Additionally, the proposed standard would require the discharge of pool and spa water overboard to occur while the vessel is underway unless determined infeasible by the Secretary.

Finally, as discussed in VIII C. *Discharges Incidental to the Normal Operation of a Vessel—Specialized Areas,* and as required by the VGP, EPA proposes additional controls for discharges from pools and spas from vessels operating in federally-protected waters.

18. Refrigeration and Air Conditioning

Condensation from cold refrigeration or evaporator coils of air conditioning systems drips from the coils and collects in drip troughs which typically channel to a drainage system. The condensate discharge may contain toxic, conventional, and nonconventional pollutants including detergents, seawater, food residue, and trace metals. This waste stream can easily be segregated from oily wastes, and toxic or hazardous materials and safely discharged, channeled, or collected for temporary holding until disposed of onshore or drained to the bilge.

EPA endeavored to identify new technology and best management options for refrigeration and air conditioning condensate; however, EPA did not identify any new technology or management options since the development of the VGP. As such, EPA relied on the BPT/BCT/BAT analysis that led to the development of the VGP requirements and is proposing substantively similar requirements as the VGP.

As required by the VGP, EPA proposes to prohibit the discharge of refrigeration and air conditioning condensate directly overboard that contacts toxic or hazardous materials.

19. Seawater Piping

Seawater piping systems, including sea chests and grates, are a niche area that have the potential to harbor and discharge a large quantity of ANS, which are a nonconventional pollutant. Niche areas represent a challenge for biofouling management as they are generally more difficult to access and are protected from hydrodynamic forces, facilitating the accumulation and survivorship of fouling organisms. Niche areas account for approximately 10 percent of the total wetted surface area of a vessel (Moser et al., 2017). However, over 80 percent of species sampled in vessel biofouling studies were found in niche areas (Bell et al., 2011). Therefore, while the relative surface area of niche areas in proportion to the hull may be low, the risk of such areas contributing to the discharge of ANS is significant. Additionally, seawater piping systems on commercial vessels may provide water uptake for firefighting response, engine cooling, and ballast water. Ensuring that these systems are unobstructed from macrofouling organisms is vital to ship operations, including the structural integrity of the vessel and the safety of the crew.

The VGP required vessel owners/operators to remove fouling organisms from seawater piping on a regular basis and dispose of removed substances in accordance with local, state, and federal regulations. The VGP also prohibited the discharge of removed fouling organisms into regulated waters. Additionally, the VGP required a drydock inspection report noting that the sea chest and other surface and niche areas of the vessel have been inspected for attached living organisms, and those organisms have been removed or neutralized.

EPA proposes any vessel with a seawater piping system (sea chests, grates, and any sea-piping) that accumulates biofouling that exceeds a fouling rating of FR–20 must be fitted with a Marine Growth Prevention System (MGPS).

The most common MGPS for seawater includes sacrificial anodic copper systems and chlorine-based dosing systems. Such systems are already widely in use and available. EPA

recognizes that there may be a variety of systems capable of addressing biofouling in seawater systems, and an effective, preventative biofouling management strategy may include a combination of different systems. EPA therefore expanded the definition of an MGPS for this standard to also include chemical injection; electrolysis, ultrasound, ultraviolet radiation, or electrochlorination; application of an antifouling coating; or use of cupro-nickel piping. Due to the many options available and the wide extent of their current use, EPA considers the MGPS options provided to be best available technology.

An MGPS can vary widely in operational characteristics and placement suitability. EPA proposes that the MGPS selection must consider the level, frequency, and type of expected biofouling and the design, location, and area in which the system will be used. For example, it has been suggested that an MGPS installed in the sea chest provides protection to both the sea chest and internal pipework, while one installed in the strainer may only protect the internal pipework. Furthermore, anti-fouling coating selection and application should be appropriate to the material of the piping and level of waterflow to which the coated area is subjected. Based on the potential differences in profile of the coated areas, the coating applied to a seawater system may be different from the coating applied to the vessel hull. EPA recommends that the MGPS should be selected, installed, and maintained according to the manufacturer specifications.

Upon identification that biofouling exceeds a level of FR–20 despite preventative measures, then reactive measures must be used to remove biofouling. Such measures can include freshwater flushing or chemical dosing. For example, vessels that use seawater cooling systems to condense low pressure steam from propulsion plants or generator turbines already practice freshwater flushing as a means of removing biofouling. However, discharges resulting from reactive measures to remove macrofouling are prohibited in port.

When these vessels are in port for more than a few days, the main steam plant is shut down and does not circulate. This can cause an accumulation of biological growth within the system; consequently, a freshwater layup is carried-out by flushing the seawater in the system with potable or surrounding freshwater (*e.g.,* lake water) and thoroughly cleaning the system. EPA expects the frequency at which reactive measures should be used will be vessel-specific and therefore is not proposing a specific time interval. Time intervals should be determined based on a vessel's operational profile. Finally, as proposed in section 139.40, EPA proposes additional controls for discharges from seawater piping systems when vessels are operating in federally-protected waters.

Seawater piping discharges also include non-contact engine cooling water, hydraulic system cooling water, refrigeration cooling water, and freshwater lay-up wastewater. Such systems use ambient water to absorb the heat from heat exchangers, propulsion systems, and mechanical auxiliary systems. The water is typically circulated through an enclosed system that does not come in direct contact with machinery, but still may contain sediment from water intake, traces of hydraulic or lubricating oils, and trace metals leached or eroded from the pipes within the system. Additionally, because it is used for cooling, the effluent will have an increased temperature. Cooling water can reach high temperatures with the thermal difference between seawater intake and discharge typically ranging from 5 °C to 25 °C, with maximum temperatures reaching 140 °C. EPA is aware that use of shore-power may reduce the discharges of seawater from cooling system; however, EPA recognizes that shore-power may not be available in many locations, may not be sufficient for the electricity needs of the vessel, and may not be compatible with the vessel's systems. Therefore, currently, EPA is not proposing to require the use of shore-power to reduce thermal discharges from seawater piping systems.

20. Sonar Domes

Sonar dome discharge consists of leachate from anti-fouling materials into the surrounding seawater and the discharge of seawater or freshwater retained within the sonar dome. Sonar domes house detection, navigation, and ranging equipment and are filled with water to maintain their shape and pressure. They are typically found on research vessels but may occur on other vessel classes. Sonar dome discharge occasionally occurs when the water in the dome is drained for maintenance or repair; discharge rates are estimated to range from 300 to 74,000 gallons from inside the sonar dome for each repair event. This discharge from inside the dome may include toxic pollutants including zinc, copper, nickel, and epoxy paints. Additionally, discharge occurs when materials leach from the exterior of the dome. Components that may leach into surrounding waters include antifouling agents, plastic, iron and rubber.

EPA endeavored to identify new technology and best management options for sonar domes; however, EPA did not identify any new technology or management options since the development of the VGP. As such, EPA relied on the BPT/BCT/BAT analysis that led to the development of the VGP requirements and is proposing to require substantively the same standard of performance required by the VGP.

EPA proposes to prohibit the discharge of water during maintenance or repair from inside the sonar domes. Additionally, the proposed standard would prohibit the use of bioaccumulative biocides when non-bioaccumulative alternatives are available.

C. Discharges Incidental to the Normal Operation of a Vessel—Federally-Protected Waters Requirements

The VIDA, in CWA Section 312(p)(4)(B)(iii), specifies that EPA must propose national standards of performance that are no less stringent than the VGP requirements relating to effluent limits and related requirements, including with respect to waters subject to Federal protection, in whole or in part, for conservation purposes (with limited exemptions for new information or to correct mistakes or misinterpretations made in previous requirements in the VGP). Therefore, EPA proposes to prohibit or limit discharges in federally-protected waters consistent with the VGP requirements established for ''waters federally-protected for conservation purposes.'' EPA proposes that the designated federally-protected waters for this rulemaking consist of the areas of waters listed in Appendix G of the VGP (National Marine Sanctuaries, Marine National Monuments, National Parks, National Wildlife Refuges, National Wilderness Areas, or parts of the National Wild and Scenic Rivers System) plus any additional individual waters that have been added to these nationally-recognized waters since the establishment of the VGP Appendix G; this updated list of waters is proposed in Appendix A of Part 139 in this rulemaking. Federally-protected waters are likely to be of high quality and consist of unique ecosystems which may include distinctive species of aquatic animals and plants. Furthermore, as protected areas, these waters are more likely to have a greater abundance of sensitive species of plants and animals that may have trouble

surviving in areas with greater anthropogenic impact. Such waters are important to the public at large, as evidenced by the waters' special status or designation by the Federal government as National Marine Sanctuaries, Marine National Monuments, National Parks, National Wildlife Refuges, National Wilderness Areas, or parts of the National Wild and Scenic Rivers System.

To develop the list of applicable ''federally-protected waters,'' for the VGP, EPA reviewed several federal authorities that protect waters that are known to be of high value or sensitive to environmental impacts, such as those administered by the Bureau of Land Management (BLM), the National Park Service (NPS), the United States Fish and Wildlife Service (FWS), the Forest Service (USFS), and the National Oceanic and Atmospheric Administration (NOAA). These areas, identified in Appendix G of the VGP, include:

- National Marine Sanctuaries—as designated under the National Marine Sanctuaries Act (16 U.S.C. 1431 *et seq.*) and implementing regulations found at 15 CFR part 922 and 50 CFR part 404. Maps and a list of national marine sanctuaries are currently available at *https://sanctuaries.noaa.gov.*
- Marine National Monuments—as designated by presidential proclamation under the Antiquities Act of 1906 (54 U.S.C. 320301 et seq). Maps and a list of marine national monuments are currently available at *https://fisheries.noaa.gov.*
- National Parks (including National Preserves and National Monuments)—as designated under the National Park Service Organic Act, as amended (54 U.S.C. 100101 *et seq.*) within the National Park System by the NPS within the U.S. Department of the Interior. Maps and a list of national parks are currently available at *https://www.nps.gov/findpark.index.htm.*
- National Wildlife Refuges (including Wetland Management Districts, Waterfowl Production Areas, National Game Preserves, Wildlife Management Area, and National Fish and Wildlife Refuges)—as designated under the National Wildlife Refuge System Administration Act of 1966 as amended by the National Wildlife Refuge System Improvement Act of 1997 (16 U.S.C. 668dd et seq). Maps and a list of national wildlife refuges are currently available at *https://www.fws.gov/refuges.*
- National Wilderness Areas—as designated under the Wilderness Act of 1964 (16 U.S.C. 1131 et seq). Section 4(c) of the Wilderness Act strictly prohibits motorized vehicles, vessels, aircrafts or equipment for the purposes of transport of any kind within the boundaries of all wilderness areas (16 U.S.C. 1133(c)). Exceptions to this Act include motorized vehicle use for the purposes of gathering information on minerals or other resources; for the purposes of controlling fire, insects, or disease; and in wilderness areas where aircraft or motorized boat use have already been established prior to 1964. Maps and a list of national wilderness areas are available at *https://www.wilderness.net.*
- National Wild and Scenic Rivers—as designated under the Wild and Scenic Rivers Act of 1968 (16 U.S.C. 1271 et seq). Maps and a list of national wild and scenic rivers are currently available at *https://www.rivers.gov.*

EPA does not propose to include Outstanding National Resource Waters (ONRWs) on the list of federally-protected waters in this proposed rule as these are State or Tribal water quality-based designations under the antidegradation policy of the CWA. CWA Section 312(p)(9) establishes state authorities under the VIDA and CWA Section 312(p)(10) establishes specific regional requirements and neither section includes nor references the ONRWs established under the VGP.

As required by the VGP, EPA proposes to include discharge requirements for vessels operating in federally-protected waters as designated in Appendix A. These requirements are in addition to any applicable general or specific discharge requirements in Subparts B and C of the proposed rule. The following paragraphs describe the additional discharge requirements established when a vessel is operating in federally-protected waters.

Ballast Tanks: EPA proposes that, generally consistent with section 2.2.3.3. of the VGP, the discharge or uptake of ballast water must be avoided in federally-protected waters, except for those vessels operating within the boundaries of any national marine sanctuary that preserves shipwrecks or maritime heritage in the Great Lakes, including Thunder Bay National Marine Sanctuary and Underwater Preserve, as necessary to allow for safe and efficient vessel operation, unless the designation documents for such sanctuary do not allow taking up or discharging ballast water in such sanctuary, pursuant to the Howard Coble Coast Guard and Maritime Transportation Act of 2014, Public Law 113–281, title VI, sec. 610, as amended by the Coast Guard Reauthorization Act of 2015, Public Law 114–120, title VI, sec. 602).

Bilges: EPA proposes that, consistent with section 2.2.2 of the VGP, for any vessel of 400 GT ITC (400 GRT if GT ITC is not assigned) and above, the discharge of bilgewater is prohibited.

Boilers: EPA proposes that, consistent with section 2.2.6 of the VGP, any discharge from a boiler into federally-protected waters is prohibited. This requirement acknowledges that small volumes of routine blowdown may be discharged because of design and operational considerations of the boiler if compliance with this part would compromise the safety of life at sea consistent with exclusion from these discharge standards in section 139.1(b)(3) of the proposed rule.

Fire Protection Equipment: EPA proposes that, generally consistent with section 2.2.5 of the VGP for aqueous film forming foam and section 2.2.12 of the VGP for firemain systems, the discharge from fire protection equipment during training, testing, maintenance, inspection, and certification into federally-protected waters is prohibited and the discharge of fluorinated foam in federally-protected waters is prohibited.

Graywater: EPA proposes that, consistent with section 2.2.15 of the VGP, the discharge of graywater into federally-protected waters is prohibited from any vessel with remaining available graywater storage capacity.

Motor Gasoline and Compensating Discharge: EPA proposes that, consistent with section 2.2.16 of the VGP, the discharge of motor gasoline and compensating discharges into federally-protected waters is prohibited.

Additionally, EPA proposes to include several new or modified discharge requirements for vessels operating in federally-protected waters. EPA proposes that these additional requirements are technologically available because the waters that are ''federally protected'' waters are limited and thus vessels are able to operate without discharging in these protected waters. For example, a vessel traveling through the Florida Keys National Marine Sanctuary can ordinarily wait to discharge accumulated water and sediment from any chain locker or chemically-dosed seawater piping until no longer in those federally-protected waters. EPA proposes that the requirement is economically achievable because EPA does not have any information indicating that vessels undertaking an activity such as holding would incur costs.

Chain Lockers: EPA proposes that the discharge of accumulated water and sediment from any chain locker into federally-protected waters is prohibited.

This is a proposed new requirement that acknowledges that cleanout of chain lockers is not a time sensitive activity and as such, can be scheduled at times when a vessel is outside of these sensitive waters.

Decks: EPA proposes that the discharge of deck washdown into federally-protected waters is prohibited. This proposed requirement extends coverage from certain vessels in the VGP to all vessels that acknowledges that washing of decks is an activity that can be scheduled for times when a vessel is outside of these sensitive waters.

Hulls and Associated Niche Areas: EPA proposes that the discharge from in-water cleaning of vessel hulls and niche areas into federally-protected waters is prohibited. This is a new requirement that acknowledges in-water cleaning of vessel hulls and niche areas is an activity that can be scheduled for times when the vessel is outside of these sensitive waters.

Pools and Spas: EPA proposes that the discharge of pool or spa water into federally-protected waters is prohibited. This proposed requirement extends coverage from medium and large cruise ships to all vessels with pools or spas and acknowledges that these discharges can be scheduled for times when the vessel is outside of these sensitive waters.

Seawater Piping Systems: EPA proposes that the discharge of chemical dosing, as required in section 139.28 of the proposed rule, into federally-protected waters is prohibited. This is a new requirement that acknowledges chemical dosing and the resultant discharge is an activity that can be scheduled for times when the vessel is outside of these sensitive waters.

EPA specifically solicits comment on the use of the VGP's Appendix G water areas and more specifically the list of waters in Appendix A as the proposed static list of federally-protected waters, including whether specific designations of waters should be added to or excluded from the proposed list. EPA also specifically solicits comments on the additional discharge requirements proposed for vessels operating in federally-protected waters.

D. Discharges Incidental to the Normal Operation of a Vessel—Previous VGP Discharges No Longer Requiring Control

EPA proposes to exclude fish hold effluent and small boat engine wet exhaust as independent discharges incidental to the normal operation of a vessel under the proposed rule.

Fish hold is the area where fish are kept once caught and kept fresh during the remainder of the vessel's voyage before being offloaded to shore or another tender vessel. The fish hold is typically a refrigerated seawater holding tank, where the fish are kept cool by mechanical refrigeration or ice. With the exception of ballast water, CWA Section 312(p)(2)(B)(i)(III) excludes from these proposed regulations discharges incidental to the normal operation of a fishing vessel; therefore, EPA proposes that although this discharge was included in the VGP, it should not be a discharge incidental to the normal operation of a vessel subject to these regulations.

Small boat engines use ambient water that is injected into the exhaust for cooling and noise reduction purposes. Similar to fishing vessels, with the exception of ballast water, CWA Section 312(p)(2)(B)(i)(III) excludes from these proposed regulations discharges incidental to the normal operation of a vessel less than 79 feet; therefore, EPA proposes that although this discharge was included in the VGP, it should not be a discharge incidental to the normal operation of a vessel subject to these regulations.

IX. Procedures for States To Request Changes to Standards, Regulations, or Policy Promulgated by the Administrator

A. Petition by a Governor for the Administrator To Establish an Emergency Order or Review a Standard, Regulation, or Policy

Under CWA Section 312(p)(7)(A), a Governor of a state may submit a petition to the Administrator to issue an emergency order or to review any standard of performance, regulation, or policy if there exists new information that could reasonably result in a change. A petition must be signed by the Governor (or a designee) and must include the purpose of the petition (request for emergency order or to review of any standard of performance, regulation, or policy); any applicable scientific or technical information that forms the basis of the petition; and the direct and indirect benefits if the requested petition were to be granted by the Administrator. The Administrator shall grant or deny the petition and either issue the relevant emergency order or submit a Notice of Proposed Rulemaking to the **Federal Register** for comment for a change in any standard of performance, regulation, or policy.

EPA specifically solicits comment on the proposed process for Governors to solicit the issuance of an emergency order or to review any standard of performance, regulation of policy, including whether a more detailed process should be developed.

B. Petition by a Governor for the Administrator To Establish Enhanced Great Lakes System Requirements

CWA Section 312(p)(10)(B) creates a process for establishing enhanced federal standards or requirements to apply within the Great Lakes System in lieu of any comparable standards or requirements promulgated under CWA Section 312(p)(4)–(5). Any Governor of a Great Lakes State (or the Governor's designee) may initiate the process by submitting a petition for an enhanced standard to the other Great Lakes States Governors, as well as the as the Executive Director of the Great Lakes Commission and the Director of EPA's Great Lakes National Program Office. The petition must seek the endorsement of fellow governors for an enhanced standard of performance or other requirement with respect to any discharge that is subject to regulation under CWA Section 312(p) that occurs in the Great Lakes System. A petition shall include an explanation regarding why the applicable standard of performance or other requirement is at least as stringent as a comparable standard of performance or other requirement in the final rule; in accordance with maritime safety; and in accordance with applicable maritime and navigation laws and regulations. After involving the Great Lakes Commission, the requisite number of Governors may jointly submit to the Administrator and the Secretary an endorsement of a proposed standard of performance or other requirement to apply within the Great Lakes System.

Upon receipt of the proposed standard of performance or requirement from a Great Lakes Governor, the Administrator shall submit, after consultation with the USCG, a notice to the **Federal Register** that provides an opportunity for public comment on the proposed standard of performance or requirement. In addition, the Administrator shall commence a review of the proposed standard of performance or requirement to determine if it is at least as stringent as the comparable CWA Section 312(p) standard. During review, pursuant to CWA Section 312(p)(10)(B)(iii)(III)(bb), the Administrator shall consult with the Secretary, the Governor of each Great Lakes State, and representatives from the Federal and provincial governments of Canada; shall take into consideration any relevant data or public comments received; and shall not take into consideration any preliminary assessment by the Great Lakes

Commission or dissenting opinion submitted by a Governor of a Great Lake State. Not later than 180 days after receipt of the proposed standard of performance or requirement, the Administrator, in concurrence with the Secretary, shall approve or disapprove the proposal. If the proposal is disapproved, the Administrator shall submit a notice of determination to the **Federal Register** that describes the reasons why the standard of performance or requirement is less stringent or inconsistent with applicable maritime and navigational laws and provide any recommendations for modification of the proposal. If the Administrator approves a proposed standard of performance or other requirement, the Administrator shall submit a notice of the determination to the Governor of each Great Lakes State and to the **Federal Register**. Additionally, the Administrator shall establish by regulation the proposed standard of performance for the Great Lakes.

EPA specifically solicits comment on the process to request enhanced Great Lakes system requirements, including the extent to which EPA should provide further details in the final rule considering the details already included in the VIDA.

C. Application by a State for the Administrator To Establish a State No-Discharge Zone

Under CWA Section 312(p) states have an opportunity to apply to EPA to prohibit one or more discharges incidental to the normal operation of a vessel, whether treated or not, into specified waters, if the state determines that the protection and enhancement of the quality of some or all of its waters require greater environmental protection.

Pursuant to CWA Section 312(p)(10)(D)(iii)(I), a discharge prohibition established by EPA through regulation would not apply until after the Administrator reviews the state application, makes a determination with concurrence from the USCG, publishes a proposed rule for comment, and publishes a regulation establishing that (1) the prohibition would protect and enhance the quality of the specified waters; (2) adequate facilities for the safe and sanitary removal of the discharge incidental to the normal operation of a vessel are reasonably available for the waters to which the prohibition would apply; and (3) the discharge can safely be collected and stored until a vessel reaches a discharge facility or other location. If the no-discharge zone concerns ballast water discharges regulated under CWA Section 312(p), then the Administrator must also determine that adequate facilities are reasonably available after considering at a minimum water depth, dock size, pumpout capacity and flow rate, availability of year round operations, proximity to navigational routes, the ratio of pumpout facilities to vessels in operation in those specified waters. The VIDA also provides that the prohibition for ballast water discharges will not unreasonably interfere with the safe loading and unloading of cargo, passengers, or fuel.

EPA proposes that a state application for such a prohibition must include (i) a signature by the Governor; (ii) a certification that the protection and enhancement of the waters for which the state is seeking a prohibition require greater environmental protection than the applicable national standard of performance provides; (iii) a detailed analysis of how the requested prohibition for each individual discharge requested will protect the waters for which the state is seeking a prohibition; (iv) a table identifying types and number of vessels operating in the waterbody and a table identifying the types and number of vessels that will be the subject of the prohibition; (v) a map detailing the location, operating hours, draught requirements, and service capabilities of commercial and recreational pump-out facilities (both mobile and stationary) available to receive each individual discharge in the waters for which the state is seeking a prohibition; (vi) a table identifying the location and geographic area of each proposed no-discharge zone; and (vii) a detailed analysis of how the vessels subject to the prohibition may be impacted with regards to collection capability, storage capability, need for retrofitting, travel time to facility, and safety concerns.

EPA is proposing that these additional procedures because its history with CWA Section 312 sewage no-discharge zones suggests that the statutory language does not provide enough detail or description to clearly define a workable process without additional clarification.

EPA specifically solicits comment on the no-discharge zone application process.

X. Implementation, Compliance, and Enforcement

CWA Section 312(p)(5) directs the USCG to develop implementing regulations governing the design, construction, testing, approval, installation, and use of marine pollution control devices as are necessary to ensure compliance with the national standards of performance presented in the proposed rule. Additionally, the USCG shall promulgate requirements to ensure, monitor, and enforce compliance of the proposed standards. As such, the proposed rule does not include implementation, compliance, or enforcement provisions.

XI. Regulatory Impact Analysis

EPA projects that the incremental costs and benefits arising from the proposed rule will be minor and that the vessel community will experience a net savings of $12.4 million annually. This regulatory relief is principally the result of the VIDA exclusion of small vessels and fishing vessels from federal incidental discharge requirements (*e.g.,* CWA permits and national discharges standards), except for ballast water. When compared to the current VGP requirements, this exclusion will ultimately reduce burden on more than 155,000 vessels.

EPA estimates that 66,000 U.S.- and 16,000 foreign-flagged vessels will need to comply with the proposed standards once finalized. In addition to its assessment of the cost impacts specifically to the 66,000 U.S.-flagged vessels, EPA also examined the cost impacts to the approximately 500 foreign-flagged vessels that are U.S.-owned.

The cost analysis, found in the Regulatory Impact Analysis (RIA) located in the rulemaking docket, uses compliance with the VGP and the sVGP, as well as other regulations and industry standards, (*i.e.,* the *status quo* that existed prior to the passage of the VIDA) as the analytic baseline. The analysis compares baseline cost impacts experienced by the regulated community immediately prior to passage of the VIDA legislation to projected cost impacts expected as a result of the proposed new EPA standards. The VIDA repealed the sVGP effective immediately upon signature, while stipulating that VGP requirements are to remain in place until the new VIDA program is fully in force and effective. This analysis accounts for both the impacts of the proposed new EPA standards as well as the regulatory relief expected as a result of the VIDA exclusion of small vessels and fishing vessels from the discharge requirements, except for ballast water, and the corresponding repeal of the sVGP.

The cost analysis groups the proposed rule's major impacts into four categories. The first category of impacts is comprised of new standards in the proposed rule that result in incremental costs compared to existing VGP

requirements. In this category, EPA is proposing two new discharge requirements, one for graywater systems and one for seawater piping systems, that together are projected to result in incremental costs of $4.3 million annually. The second category describes proposed standards that are not expected to result in incremental costs compared to the VGP baseline since they reflect practices already in place on vessels as a result of other regulations and industry standards. The third category describes changes mandated by Congress directly in the VIDA that are projected to result in incremental costs to the regulated community. These provisions impose new ballast water requirements nationally and regionally in the Pacific Region and the Great Lakes. The estimated incremental cost for vessels to meet these Congressionally-mandated provisions is $5.5 million annually. The fourth category is the reduction in costs projected to result from the VIDA exclusion of small vessels and fishing vessels from the discharge requirements, except for ballast water, and the corresponding repeal of the sVGP. EPA estimates that this regulatory relief will result in annual cost savings of nearly $22.2 million to the vessel community.

To evaluate the potential impact of the proposed rule on small entities, EPA used a cost-to revenue test to evaluate potential severity of economic impact on vessels owned by small entities. The test calculates annualized pre-tax compliance cost as a percentage of total revenues and uses a threshold of 1 and 3 percent to identify entities that would be significantly impacted if this proposed rule were to go final. EPA projects the potential impacts would not exceed these conventional cost/revenue thresholds. In addition, the Agency completed estimates of the paperwork burden associated with the proposed rulemaking. These estimates project the annualized paperwork burden on states that voluntarily petition EPA for any one of the following: Establishment of no-discharge zones, review of national standards of performance, issuance of emergency orders, and establishment of enhanced Great Lakes System requirements.

EPA also assessed the environmental impacts from this proposal. The Agency does not expect the proposed rule to change environmental benefits significantly compared to those realized by the VGP since the existing VGP requirements are largely proposed to be adopted as the new discharge standards. EPA notes that the VIDA exclusion of small vessels and fishing vessels, except for ballast water, and the corresponding repeal of the sVGP could potentially lead to a reduction in environmental benefits to the extent that affected vessels no longer adhere to practices previously required under the sVGP. In particular, the RIA examines possible losses in benefits from the elimination of the sVGP discharge management requirements for bilgewater, graywater, and anti-fouling hull coatings.

EPA did not evaluate the cost impacts from changes in monitoring, reporting, self-inspection, or recordkeeping associated with the VIDA re-allocation of EPA and USCG authorities and responsibilities. The USCG will present an analysis of these impacts, and other relevant impacts, in documentation supporting their rulemaking for the USCG portions of the CWA Section 312(p) program.

The RIA is available in the docket for this proposed rulemaking. EPA solicits comment on all aspects of its RIA including the underlying assumptions and methodology.

XII. Statutory and Executive Order Reviews

Additional information about these statutes and Executive Orders can be found at *https://www.epa.gov/laws-regulations/laws-and-executive-orders*.

A. Executive Order 12866: Regulatory Planning and Review and Executive Order 13563: Improving Regulation and Regulatory Review

The proposed rule is a significant regulatory action that was submitted to the Office of Management and Budget (OMB) for review because it raises novel legal or policy issues. Any changes made in response to OMB recommendations have been documented in the public docket for this proposed rule.

In addition, EPA prepared an analysis of the potential impacts associated with this proposed rule. The regulatory impact analysis is available in the public docket for this proposed rule, and both costs and benefits are summarized in Section XI. *Regulatory Impact Analysis.*

B. Executive Order 13771: Reducing Regulation and Controlling Regulatory Costs

The proposed rule is expected to be an Executive Order 13771 deregulatory action. Details on the estimated cost savings of this proposed rule can be found in EPA's analysis of the potential costs and benefits associated with this action.

C. Paperwork Reduction Act

This proposed rule, once finalized by EPA and implemented through corresponding USCG requirements addressing implementation, compliance, and enforcement, would impose an information collection burden to states under the PRA. The information collection activities in this proposed rule have been submitted for approval to the Office of Management and Budget (OMB) under the PRA. The Information Collection Request (ICR) document that EPA prepared has been assigned EPA ICR number 2605.01. You can find a copy of the ICR in the docket for this rule, and it is briefly summarized here.

Background

EPA has regulated discharges incidental to the normal operation of vessels under the CWA Section 402 NPDES permitting program since 2008. The information collection burden associated with EPA's regulation of those activities are included as part of the Information Collection Request (ICR) for the NPDES Program, OMB Control No. 2040–0004.

The current inventory of vessels included in the NPDES ICR includes 72,942 vessels covered under the VGP and 137,739 small vessels covered under the Small Vessel General Permit (sVGP). That ICR identifies a total of 292,466 responses annually specific to the VGP and sVGP with a total annual burden of 269,919 hours for activities including: Reporting (Notice of Intent, Notice of Termination, annual report); inspection (routine, annual, and drydock) and monitoring; and recordkeeping.

As described below, the enactment of the VIDA in 2018 authorized EPA and the USCG to establish a new regulatory framework for the discharges covered by the VGP which will result in a change in the type of information collected, the Agency responsible for collecting the information, and ultimately the information collection burden.

Upon enactment of the VIDA (December 4, 2018), the sVGP was repealed and incidental discharges from small vessels and fishing vessels less than 79 feet with the exception of ballast water were excluded from requirements established under the VIDA. Thus, any monitoring and reporting burden beyond those for ballast water for small vessels or fishing vessels less than 79 feet in length was terminated. Additionally, once EPA develops new national standards of performance for discharges incidental to the normal operation of a vessel (as is

being proposed in this rulemaking) and the USCG establishes requirements that address implementation, compliance, and enforcement of the national standards, the information collection burden established under the EPA VGP will be terminated and the information collection burden will be modified as described below.

Proposed Rule

As detailed in CWA Section 312(p)(5), upon implementation of monitoring, reporting, and recordkeeping requirements by the USCG, the paperwork requirements for vessel owners and operators would need to be reported to the USCG and not to EPA. As such it is expected that much of the existing paperwork burden on vessel owners and operators under the VGP requirements would be managed by the USCG upon implementation of their specific reporting and monitoring requirements. Therefore, the proposed rule would not impose a new paperwork burden on vessel owners and operators.

However, the proposed rule would impose a new information collection burden on states seeking to petition EPA to establish different national standards of performance including enhanced standards in the Great Lakes, issue emergency orders, or establish no-discharge zones. EPA does not anticipate an information collection burden on states until the USCG has established final implementing requirements (required by the VIDA as soon as practicable but not later than two years after the EPA discharge standards proposed in this rulemaking are finalized). After such time, the information collection burden relates to the voluntary preparation and submission of petitions by states and is therefore an intermittent activity.

The ICR submitted for approval to the OMB as part of this rulemaking reflects an anticipated burden to states in the third year of the three-year ICR cycle. This includes one petition of each type: Modification of national standards of performance, issuance of emergency orders, and establishment no-discharge zones. EPA does not expect petitions for enhanced Great Lakes System requirements during this ICR cycle. The type and level of detail of information that a state would need to generate to petition EPA under CWA Section 312(p) is most analogous to the information prepared for an application to EPA under the existing CWA Section 312 ICR (OMB control number 2040–0187), which includes state activities related to petitioning EPA for no-discharge zones for sewage and discharges incidental to the normal operation of vessels of the Armed Forces. For incidental discharges from vessels of the Armed Forces, states may also petition EPA for review of standards. Because of the parallels in discharge types and state activities, EPA used the burden estimates in the existing ICR to inform the expected burden for this proposed rule. Looking ahead, EPA proposes that this new ICR be combined with the existing CWA Section 312 ICR (OMB control number 2040–0187) expected to be renewed in August 2022. This would create a single ICR that would include the information collection burden for all three vessel programs under CWA Section 312 (sewage, vessels of the Armed Forces, and commercial vessels).

The hour and cost estimates, summarized below, include such activities as reviewing the relevant regulations and guidance documents, gathering and analyzing the required information, and preparing and submitting the application.

Respondents/affected entities: State governments (SIC code 9511, NAICS code 924110) are the only respondents to the data collection activities described in this ICR.

Respondent's obligation to respond: Preparation and submission of a petition is a voluntary action that may be undertaken by the respondent. This is not a reporting requirement, nor are there any deadlines associated with these petitions.

Estimated number of respondents: Three respondents are anticipated during this three-year ICR cycle.

Frequency of response: Three petitions are anticipated during this three-year ICR cycle, each in the third year, including one petition each for establishment of a no-discharge zone, review of standards, and issuance of an emergency order.

Total estimated burden: Approximately 82 hours per year.

Total estimated cost: $4,560 per year, including $150 annualized operation & maintenance costs.

An agency may not conduct or sponsor, and a person is not required to respond to, a collection of information unless it displays a currently valid OMB control number. The OMB control numbers for the EPA's regulations in 40 CFR are listed in 40 CFR part 9.

Written comments and recommendations for the proposed information collection should be sent within 30 days of publication of this notice to *https://www.reginfo.gov/public/do/PRAMain.* This particular information collection request can be located by selecting ''Currently under 30-day Review—Open for Public Comments'' or by using the search function. Since OMB is required to make a decision concerning the ICR between 30 and 60 days after receipt, OMB must receive comments no later than November 25, 2020. EPA will respond to any ICR-related comments in the final rule.

D. Regulatory Flexibility Act

The Regulatory Flexibility Act (RFA) generally requires an agency to prepare a regulatory flexibility analysis of any rule subject to notice-and-comment rulemaking requirements under the Administrative Procedure Act or any other statute, unless the agency certifies that the rule will not have a significant economic impact on a substantial number of small entities. Small entities include small businesses, small organizations, and small governmental jurisdictions.

EPA certifies that this action will not have a significant economic impact on a substantial number of small entities under the RFA. Although the proposed rule will impose requirements on any small entity that operates a vessel subject to the standards, EPA used a cost-to-revenue test to evaluate potential severity of economic impact on vessels owned by small entities. EPA determined that the projected cost burden would not exceed the conventional cost/revenue thresholds used for small entity impact screening analyses (costs greater than 1 percent and 3 percent of annual revenue). Details of the screening analysis are presented in the section entitled ''*Small Business Impacts*'' in the RIA accompanying the proposed rule.

E. Unfunded Mandates Reform Act

Title II of the Unfunded Mandates Reform Act of 1995 (UMRA), 2 U.S.C. 1531–1538, requires federal agencies, unless otherwise prohibited by law, to assess the effects of their regulatory actions on state, local, and tribal governments, and the private sector. An action contains a federal mandate if it may result in expenditures of $100 million or more (annually, adjusted for inflation) for state, local, and tribal governments, in the aggregate, or the private sector in any one year ($160 million in 2018). This action does not contain any unfunded mandate as described in UMRA, 2 U.S.C. 1531–1538, and does not significantly or uniquely affect small governments.

F. Executive Order 13132: Federalism

Under Executive Order 13132, EPA may not issue an action with federalism implications, that imposes substantial direct compliance costs, and that is not required by statute, unless the federal

government provides the funds necessary to pay the direct compliance costs incurred by state and local governments or EPA consults with state and local officials early in development of the action.

EPA has concluded that this action has federalism implications for the following reason. The VIDA added a new CWA Section 312(p)(9)(A) that specifies beginning on the effective date of the requirements promulgated by the Secretary established under CWA Section 312(p)(5), no state, political subdivision of a state, or interstate agency may adopt or enforce any law, regulation, or other requirement with respect to an incidental discharge subject to regulation under the VIDA except insofar as such law, regulation, or other requirement is identical to or less stringent than the federal regulations under the VIDA. Accordingly, EPA and the USCG conducted a Federalism consultation briefing on July 9th, 2019 in Washington, DC to allow states and local officials to have meaningful and timely input into the development of EPA rulemaking.

EPA provided an overview of the VIDA, described the interim requirements and the framework of future regulations, identified state provisions associated with the VIDA, and received comments and questions. The briefing was attended by representatives from the National Governors Association, the National Conference of State Legislatures, the U.S. Conference of Mayors, the County Executives of America, the National Association of Counties, the National League of Cities, Environmental Council of the States, the Association of Clean Water Administrators, the National Water Resources Association, the Association of Fish and Wildlife Agencies, the National Association of State Boating Law Administrators, the Western Governors Association, and the Western States Water Council. Pre-proposal comments were accepted from July 9, 2019 to September 9, 2019 and are described in conjunction with the Governors' Consultation comments.

Additionally, pursuant to the terms of Executive Order 13132 and Agency policy, a federalism summary impact statement is required in the final rule to summarize not only the issues and concerns raised by state and local government commenters during the proposed rule's development, but also to describe how and the extent to which the agency addressed those concerns. Further, as required by Section 8(a) of Executive Order 13132, EPA in the final rule will include a certification from its Federalism Official stating that EPA met the Executive Order's requirements in a meaningful and timely manner. A copy of this certification will be included in the public version of the official record once the action is finalized.

G. Executive Order 13175: Consultation and Coordination With Indian Tribal Governments

This proposed action has tribal implications as specified in Executive Order 13175. See 65 FR 67249, November 9, 2000. However, it will neither impose substantial direct compliance costs on federally recognized tribal governments, nor preempt tribal law. Tribes may primarily be interested in this action because commercial vessels may operate in or near tribal waters. Additionally, Tribes may have TAS under Section 309 of the CWA. To that end, EPA consulted with tribal officials under the *EPA Policy on Consultation and Coordination with Indian Tribes* early in the process of developing this regulation to permit them to have meaningful and timely input into its development. A summary of that consultation and coordination follows.

EPA initiated a tribal consultation and coordination process for this action by sending a ''Notice of Consultation and Coordination'' letter on June 18, 2019, to all 573 federally recognized tribes. The letter invited tribal leaders and designated consultation representatives to participate in the tribal consultation and coordination process, which lasted from July 11 to September 11, 2019. EPA held an informational webinar for tribal representatives on July 11, 2019, to obtain meaningful and timely input during the development of the proposed rule. During the webinar, EPA provided an overview of the VIDA, described the interim requirements and the framework of future regulations, and identified tribal provisions associated with the VIDA. A total of nine tribal representatives participated in the webinar. EPA also provided an informational presentation on the VIDA during the Region 10 Regional Tribal Operations Committee (RTOC) call on July 18, 2019, as requested by the RTOC. During the consultation period, tribes and tribal organizations sent two pre-proposal comment letters to EPA as part of the consultation process. In addition, EPA held one consultation meeting with the leadership of a tribe, at the tribe's request, to obtain pre-proposal input and answer questions regarding the forthcoming rule.

EPA incorporated the feedback it received from tribal representatives in the proposed rule. Records of the tribal informational webinar, and a consultation summary summarizing the written and verbal comments submitted by tribes are included in the public docket for this proposed rule. The Agency specifically solicits additional comment on this proposed rule from tribal officials.

H. Executive Order 13045: Protection of Children From Environmental Health and Safety Risks

This action is not subject to Executive Order 13045 because it is not economically significant as defined in Executive Order 12866, and because EPA does not believe the environmental health or safety risks addressed by this action present a disproportionate risk to children. See 62 FR 19885, April 23, 1997. The proposed national standards of performance are designed to control discharges incidental to the normal operation of a vessel that could adversely affect human health and the environment. The proposed rule is intended to reduce discharges to receiving waters that could affect any person using the receiving waters, regardless of age.

I. Executive Order 13211: Actions That Concern Regulations That Significantly Affect Energy Supply, Distribution, and Use

This action is not a ''significant energy action'' as defined by Executive Order 13211 because it is not likely to have a significant adverse effect on the supply, distribution or use of energy. See 66 FR 28355, May 22, 2001. EPA believes that any additional energy usage would be insignificant compared to the total energy usage of vessels and the total annual U.S. energy consumption.

J. National Technology Transfer and Advancement Act

The proposed rule would establish national standards of performance but does not establish environmental monitoring or measurement requirements and thus does not include technical standards. Similarly, EPA proposes not to identify specific, prescribed analytic methods. Rather, the national standards of performance in this proposed rule would be the basis of USCG implementing regulations with respect to inspections, monitoring, reporting, sampling, and recordkeeping to ensure, monitor, and enforce compliance with these standards. The applicability of the National Technology Transfer and Advancement Act is appropriately assessed as part of that USCG rulemaking as established in CWA Section 312(p)(5)(A).

K. Executive Order 12898: Federal Actions To Address Environmental Justice in Minority Populations and Low-Income Populations

EPA proposes that this action does not have disproportionately high and adverse human health or environmental effects on minority populations, low-income populations and/or indigenous peoples, as specified in Executive Order 12898. See 59 FR 7629, February 16, 1994. While EPA was unable to perform a detailed environmental justice analysis because it lacks data on the exact location of vessels and their associated discharges, the proposed rule will increase the level of environmental protection for all affected populations without having any disproportionately high and adverse human health or environmental effects on any population, including any minority or low-income population. Overall, the proposed rule would reduce the amount of pollution entering waterbodies from vessels, which will yield health benefits and improve the recreational utility of waterbodies where vessels are subject to the proposed standards.

XIII. References

Alaska Department of Environmental Conservation (ADEC). (2007). Large Commercial Passenger Vessel Wastewater Discharge: General Permit Information Sheet. Retrieved from *http://www.dec.state.ak.us/water/cruise_ships/gp/2008_GP_Info2.pdf.*

Alfa Laval. (2017). Personal communication between Peter Sahlen and Frida Norlen, Alfa Laval and Jack Faulk, USEPA. April 1 and April 3, 2017.

American Bureau of Shipping (ABS). (2019). Best Practices for Operations of Ballast Water Management Systems Report. Available at *https://safety4sea.com/wp-content/uploads/2019/04/ABS-2019-best-practices-for-operations-of-BWMS-report-2019_04.pdf.*

Bailey, S.A., Chan, F., Ellis, S.M., Bronnenhuber, J.E., Badie, J.N., Simard, N. (2012). Risk Assessment for Ship-Mediated Introductions of Aquatic Nonindigenous Species to the Great Lakes and Freshwater St. Lawrence River. Canadian Science Advisory Secretariat.

Ballast Water Equipment Manufacturers Association (BEMA). 2020. Compilation of BWMS Type Approval Testing Biological Efficacy Data. February 13, 2020.

Bawat. A. (2016). Bawat Ballast Water Treatment. Available at *http://www.bawat.dk/images/BAWAT_PRESENTATION_AUGUST_2016_2.pdf.*

Bell, A., Phillips, S., Denny, C., Georgiades, E., and Kluza, D. (2011). Risk Analysis: Vessel Biofouling. Wellington: Ministry of Agriculture and Forestry Biosecurity New Zealand.

Briski, E., Linley, R., Adams, J., and Bailey, S. (2014). Evaluating Efficacy of a Ballast Water Filtration System for Reducing Spread of Aquatic Species in Freshwater Ecosystems. Management of Biological Invasions Volume 5, Issue 3, pp 245–253.

Brown and Caldwell. (2007). Port of Milwaukee Onshore Ballast Water Treatment—Feasibility Study Report. Prepared for the Wisconsin Department of Natural Resources. October 12, 2007.

Brown and Caldwell and Bay Engineering, Inc. (2008). Port of Milwaukee Off-Ship Ballast Water Treatment Feasibility Study Report, Phase 2. Prepared for the Wisconsin Department of Natural Resources. August 28, 2008.

Carbery, K., Owen, R., Frickers, T., Otero, E., and J. Readman. (2006). Mar. Pollut. Bull., 52, 635–644.

ClearBallast. (2012). *Overview of Hitachi Ballast Water Purification System-ClearBallast.*

COWI A/S. (2012). *Ballast Water Treatment in Ports—Feasibility Study.* Prepared for the Danish Shipowners' Association. November 2012.

Cruise Lines International Association. (2019). 2019 Environmental Technologies and Practices Report. Retrieved from *https://cruising.org/en/news-and-research/research/2019/september/2019-environment-technologies-and-practices-table---cruise-industry-report.*

Damen. (2017). Damen's InvaSave Port-Based Ballast Water Management System Has World Premiere. (marketing sheet). May 2, 2017.

DiGangi, J., Schettler, T., Cobbing, M., & Rossi, M. (2002). Aggregate exposures to phthalate in humans.

DNV GL. (2019). Global Sulphur Cap 2020 Update, External Webinar (presented on May 23, 2019), Kristian Johnsen, Fabian Kock, Alexander Strom, and Christos Chryssakis.

Drake, J.M. and D.M. Lodge. (2007). Hull fouling is a risk factor for intercontinental species exchange in aquatic ecosystems. Aquat. Invasions, 2 (2), 121–131.

Drake, L.A., Tamburri, M.N., First, M.R., Smith, G.J., and Johengen, T.H. (2014). How Many Organisms Are in Ballast Water Discharge? A Framework for Validating and Selecting Compliance Monitoring Tools. Mar Pollut Bull. 86: 122–128.

Dupuis, A., and Ucan-Marin, F. (2015). A literature review on the aquatic toxicology of petroleum oil: An overview of oil properties and effects to aquatic biota. DFO Can. Sci. Advis. Sec. Res. Doc. 2015/007. vi + 52 p.

Etkin, D.S. (2010). Worldwide analysis of in-port vessel operational lubricant discharges and leaks. Proc. 33rd Arctic and Marine Oilspill Program Technical Seminar: p. 529–554.

Glosten Associates. (2018). Feasibility Study of Shore-based Ballast Water Reception Facilities in California, prepared for the California State Lands Commission by the Delta Stewardship Council, April 13, 2018.

Golden Bear Research Center (Golden Bear). (2018). Test Facility Researchers Condemn Ballast Treatment Pessimism, February 26, 2018.

Gollasch, S. (2002). The Importance of Ship Hull Fouling as a Vector of Species Introductions into the North Sea. Biofouling, 18 (2), 105–121.

Great Ships Initiative (GSI). (2010). Report of the Land-Based Freshwater Testing of the Siemens SiCURE™ Ballast Water Management System. GSI/LB/F/A/1, pp 1–58.

Great Ships Initiative (GSI). (2011). Final Report of the Land-Based, Freshwater Testing of the Alfa Laval AB PureBallast® Ballast Water Treatment System. GSI/LB/F/A/2, pp 1–94.

Great Ships Initiative (GSI). (2014). Technical Report Land Based Performance Evaluation in Ambient and Augmented Duluth-Superior Harbor Water of Eight Commercially Available Ballast Water Treatment System Filter Units. GSI/LB/QAQC/TR/FLTR, pp 1–67.

Great Ships Initiative (GSI). (2015). Technical Report Land-Based Status Test of the JFE BallastAce® Ballast Water Management System and Components at the GSI Testing Facility. GSI/LB/QAQC/TR/JFE, pp 1–146.

Great Ships Initiative (GSI). (2016). Briefing Paper for the Great Lakes Commission Great Lakes and St. Lawrence Ballast Water Workshop, November 16–17, 2016.

Hewitt, C. and M. Campbell. (2010). The relative contribution of vectors to the introduction and translocation of marine invasive species.

Hewitt, C.L, Gollasch, S., and D. Minchin. (2009). Chapter 6: The Vessel as a Vector—Biofouling, Ballast Water and Sediments. *Biological Invasions in Marine Ecosystems,* Springer-Verlag Berlin Heidelberg.

Hilliard, R.W. and Kazansky, O. (2006). Assessment of Shipping Traffic and Ballast Water Movements to and From Caspian Region, and Preliminary Appraisal of Possible Ballast Water Management Options. IMO/UNOPS/CEP Project Technical Report IMO RER/03/G31. November 5, 2006.

Hilliard, R.W. and Matheickal, J.T. (2010). Alternative Ballast Water Management Options for Caspian Region Shipping: Outcomes of a Recent CEP/IMO/UNOPS Project. In: Emerging Ballast Water Management Systems, Proceedings of the IMO–WMU Research and Development Forum (Malmo, Sweden). January 26–29, 2010.

Hull and Associates, Inc. (2017). Preliminary Cost Estimate for the Shoreside Ballast Treatment and Supply for the U.S. Great Lakes. Prepared by Hull & Associates, Inc. for Lake Carriers' Association (LCA), Rocky River, OH. February 2017.

International Maritime Organization (IMO). (2002). Anti-fouling systems. Retrieved from *http://www.imo.org/en/OurWork/Environment/Anti-foulingSystems/Documents/FOULING2003.pdf.*

International Maritime Organization (IMO). (2004). International Convention for the Control and Management of Ships' Ballast Water and Sediments. BWM/CONF/36.

International Maritime Organization (IMO). (2008). Guidelines for Approval of Ballast Water Management Systems (G8). Annex 4 Resolution MEPC.174(58).

International Maritime Organization (IMO). (2016). Resolution MEPC.279(70), Annex 5. Available at *http://www.imo.org/en/KnowledgeCentre/IndexofIMOResolutions/Marine-Environment-Protection-Committee-%28MEPC%29/Documents/MEPC.279%2870%29.pdf.*

International Maritime Organization (IMO). (2016a). Marine Environmental Protection Committee (MEPC). Harmful Aquatic Organisms in Ballast Water. Submitted by Liberia. MEPC 69/INF .22, February 12, 2016.

International Maritime Organization (IMO). (2017). Consideration of an initial proposal to amend Annex 1 to the AFS Convention to include controls on cybutryne. PPR 5/INF.8.

International Maritime Organization (IMO). (2018). Amendment of Annex 1 to the AFS Convention to include controls on cybutryne, and consequential revision of relevant guidelines: Information presenting scientific evidence for the adverse effects of cybutryne to the environment. PPR 6/INF.7.

International Maritime Organization (IMO). (2018a). Code for Approval of Ballast Water Management Systems, Resolution MEPC.300(72), April 13, 2018.

International Maritime Organization (IMO). (2019). Lists of Type-Approved Ballast Water Management Systems, updated October 2019.

International Maritime Organization (IMO). (2020). Status of IMO Treaties, April 7, 2020.

Johengen T.H., Reid D.F., Fahnenstiel G.L., MacIsaac H.J., Dobbs F., Doblin M., Ruiz GM & Jenkins PT (2005). Assessment of transoceanic NOBOB vessels and low-salinity ballast water as vectors for non-indigenous species introductions to the Great Lakes—Chapter 5. Final Report to Great Lakes Protection Fund. 287 pp.

Keister, T., and Balog, D. (1992). Field Evaluation of Ozone for Control of Corrosion and Scale in a Zero Blowdown Application, Association of Water Technologies, 5th Annual Convention, San Diego, CA, (1992).

King, D., and Hagan, P. (2013). Economic and Logistical Feasibility of Port-Based Ballast Water Treatment: A Case Study at the Port of Baltimore (USA). MERC Ballast Water Discussion Paper No. 6, (Review Draft). UMCES Ref. No.: [UMCES]CBL 2013–011. May 2013.

Lake Carriers' Association (LCA). (2016). List of Member Vessel Ballasting Characteristics. Provided to Jack Faulk, USEPA via email.

Lake Carriers' Association (LCA). (2016a). Meeting Notes for Conference Call with Lake Carriers Association, EPA, and EPA contractor staff. August 2, 2016.

Lake Carriers' Association (LCA). (2017). Email from Tom Rayburn, LCA to Mark Briggs, Eastern Research Group, Inc. March 6, 2017.

Lake Carriers' Association (LCA). (2018). Email from Tom Rayburn, LCA to Mark Briggs, Eastern Research Group, Inc. May 8, 2018.

Maglic, L., Zec, D. and V. Francic. (2015). Effectiveness of a Barge-Based Ballast Water Treatment System for Multi-Terminal Ports. Promet—Traffic & Transportation. 27:5, 429–437.

Marinelog. (2016). Fednav Claims a Lakes BWTS First. Available at *http://www.marinelog.com/index.php?option=com_k2&view=item&id=22780:fednav-claims-a-lakes-bwts-first&Itemid=230.*

Marr, B. (2017). IoT and Big Data at Caterpillar: How Predictive Maintenance Saves Millions of Dollars. *Forbes.* Retrieved from *https://www.forbes.com/sites/bernardmarr/2017/02/07/iot-and-big-data-at-caterpillar-how-predictive-maintenance-saves-millions-of-dollars/#70a82fd17240.*

Marubini, F. and M.J. Atkinson. (1999). Effects of lowered pH and elevated nitrate on coral calcification. Mar. Ecol. Prog. Ser., 188, 117–121.

Monroy, O., Linley, R., Chan, Pl, Kydd, J. (2017). Evaluating Efficacy of Filtration + UV–C Radiation for Ballast Water Treatment at Different Temperatures. Journal of Sea Research.

Moser, C.S., Wier, T.P., First, M.R., Grant, J.F., Riley, S.C., Robbins-Wamsley, S.H., Tamburri, M.N., Ruiz, G.M., Miller, A.W., and L.A. Drake. (2017). Biol. Invasions, 19, 1745–1759.

National Ballast Information Clearinghouse (NBIC). (2020), NBIC Reported Ballast Water Discharge Ports—Dec 13 2013 through Dec 31 2017, 2020.

National Oceanic and Atmospheric Administration and National Geospatial-Intelligence Agency; U.S. Chart No. 1—Symbols, Abbreviations and Terms used on Paper and Electronic Navigational Charts, 13th Edition, April 15, 2019.

National Research Council. (1993). Managing Wastewater in Coastal Urban Areas. United States of America: National Academy of Sciences.

National Research Council. (2000). Clean Coastal Waters: Understanding and Reducing the Effects of Nutrient Pollution. United States of America. National Academy of Sciences.

Ober, H.K. (2012). Effects of Oil Spills on Marine and Coastal Wildlife. University of Florida IFAS Extension, WEC285.

Oyen, F.G.F., Camps, L.E.C.M.M., and S.E. Wedelaar Bonga. (1991). Effect of acid stress on the embryonic development of the common carp (*Cyprinus carpio*). Aquat. Toxicol., 19, 1–12.

Pavlakis, P., Tarchi, D. & Sieber, A.J. (2001). On the Monitoring of Illicit Vessel Discharges, A Reconnaissance Study in the Mediterranean Sea, EC DG Joint Research Center, Institute for the Protection and Security of the Citizen Humanitarian Security Unit.

Pereira, N.N. and Brinati, H.L. (2012). Onshore Ballast Water Treatment: A Viable Option for Major Ports. Marine Pollution Bulletin, 64(2296–2304).

Reynolds, K., Knight, I., Wells, C., Pepper, I., & Gerba, C. (1999). Detection of human pathogenic protozoa and viruses in ballast water using conventional and molecular methods. General Meeting of the American Society for Microbiology. Chicago, IL.

Schultz, M.P. (2007). Effects of coating roughness and biofouling on ship resistance and powering. Biofouling, 23 (5), 331–341.

Sekizawa, J., S. Dobson & R. Touch III. (2003). Diethyl Phthalate. World Health Organization, Concise International Chemical Assessment Document 52.

Shipping Federation of Canada. (2000). Code of Best Practices for Ballast Water Management.

Tomaszewska, M., Orecki, A., & Karakulski, K. (2005). Treatment of bilge water using a combination of ultrafiltration and reverse osmosis. Desalination, 185, 203–212.

Townsin, R.L. (2003). The Ship Hull Fouling Penalty. Biofouling, 19 (Supplement), 9–15.

Tribou, M. and G. Swain. (2017). The effects of grooming on a copper ablative coating: A six year study. Biofouling, 33 (6), 494–504.

Tuthill, A., Avery, R., Lamb, S., and Kobrin, G. (1998). Effects of Chlorine on Common Materials in Freshwater. Materials Performance, Vol. 37, No. 11, pp. 52–56.

U.S. Army Corps of Engineers (USACE). (2017). GL_Waterborne Harbor Transit Time Matrix.

U.S. Coast Guard (USCG). (2013). Ballast Water Treatment, U.S. Great Lakes Bulk Carrier Engineering and Cost Study, Volume 1I: Analysis of On-Board Treatment Methods, Alternative Ballast Water Management Practices, and Implementation Costs. Acquisition Directorate. Report No. CG–D–12–13.

U.S. Coast Guard (USCG). (2019). Marine Safety Center BWMS Type Approval Status. Available at *https://www.dco.uscg.mil/Portals/9/MSC/BWMS/BWMS_Approval_Status_9JUL19.pdf.*

U.S. Coast Guard (USCG). (2019a). Ballast Water Best Management Practices to Reduce the Likelihood of Transporting Pathogens That May Spread Stony Coral Tissue Loss Disease, Marine Safety Information Bulletin OES–MISB Number: 07–19, September 6, 2019.

U.S. EPA. (2007). Framework for Metals Risk Assessment. Retrieved from *http://www.epa.gov/osa/metalsframework.*

U.S. EPA. (2008). Cruise ship discharge assessment report (EPA–842–R–07–005). Washington DC: U.S. Environmental Protection Agency.

U.S. EPA. (2010). Generic Protocol for the Verification of Ballast Water Treatment Technology. EPA/600/R–10/146.

U.S. EPA. (2011). Environmentally Acceptable Lubricants. (EPA–800–R–11–002) Washington DC: U.S. Environmental Protection Agency.

U.S. EPA. (2011a). Ballast Water Self-Monitoring. EPA–800–R–11–003.

U.S. EPA. (2011b). Efficacy of Ballast Water Treatment Systems: A Report by the EPA Science Advisory Board. EPA–SAB–11–009.

U.S. EPA. (2011c). Oily Bilgewater Separators. (EPA–800–R–11–007) Washington DC: U.S. Environmental Protection Agency.

U.S. EPA. (2015). Feasibility and Efficacy of Using Potable Water Generators as an Alternative Option for Meeting Ballast Water Discharge Limits. U.S. Environmental Protection Agency, Office of Wastewater Management. Washington, DC. EPA 830–R–15–002. July 2015.

U.S. EPA. (2016). Draft Aquatic Life Ambient Estuarine/Marine Water Quality Criteria for Copper—2016. (EPA–822–P–16–001) Washington, DC: U.S. Environmental Protection Agency.

U.S. EPA. (2018). Copper Compounds Interim Registration Review Decision Case Nos. 0636, 0649, 4025, 4026. (EPA–HQ–OPP–2010–0212). Washington DC: U.S. Environmental Protection Agency.

U.S. EPA. (2019) U.S. EPA Ballast Water Update, Jack Faulk, presented at the BWMTech North America Conference, Ft. Lauderdale, FL, September 25, 2019.

U.S. EPA. (2020), VGP eNOI Query for Vessels Discharging Ballast by Time in the United States.

U.S. EPA. (2020a), Note to file—Summary of restrictions on discharges from Exhaust Gas Control Systems, August 11, 2020.

U.S. Geological Survey (USGS). (1999). The Quality of our Nation's Waters: Nutrients and Pesticides. USGS Circular 1225. Retrieved from *http://pubs.usgs.gov/circ/circ1225*.

Valkirs, A.O., Seligman, P.F., Haslbeck, E., and J.S. Caso. (2003). Mar. Pollut. Bull., 46, 763–779.

Van Wezel, A.P. and P. Van Vlaardingen. (2004). Environmental risk limits for antifouling substances. Aquat. Toxicol., 66, 427–444.

Voutchkov, N. (2013). Desalination Engineering Planning and Design. McGraw-Hill Companies, Inc., NY, NY.

Woods Hole Oceanographic Institute (WHOI). (2007). Harmful Algae: What are Harmful Algal Blooms (HABS). Retrieved from *http://www.whoi.edu/redtide.*

Zaniboni-Filho, E., Nuñer, A.P.O., Reynalte-Tataje, D.A., and R.L. Serafini. (2009) Fish Physiol. Biochem., 35, 151–155.

Zirino, A. and P.F. Seligman. (2002). Copper Chemistry, Toxicity, and Bioavailability and Its Relationship to Regulation in the Marine Environment. Office of Naval Research Second Workshop Report, Technical Document 3140.

Zo, Y., Grimm, C., Matte, M., Matte, G., Knight, I.T., Huq, A., & Colwell, R.R. (1999). Detection and enumeration of pathogenic bacteria in ballast Water of Transoceanic Vessels Entering the Great Lakes and Resistance to Common Antibiotics. General Meeting of the American Society for Microbiology. Chicago, IL: American Society of Microbiology.

List of Subjects in 40 CFR Part 139

Environmental protection, commercial vessels, coastal zone, incidental discharges.

Andrew Wheeler,
Administrator.

For the reasons set forth in the preamble, EPA proposes to amend 40 CFR subchapter D by adding part 139 to read as follows:

PART 139—DISCHARGES INCIDENTAL TO THE NORMAL OPERATION OF VESSELS

Subpart A—Scope

Sec.
139.1 Coverage.
139.2 Definitions.
139.3 Other Federal laws.

Subpart B—General Standards for Discharges Incidental to the Normal Operation of a Vessel

139.4 General operation and maintenance.
139.5 Biofouling management.
139.6 Oil management.

Subpart C—Standards for Specific Discharges Incidental to the Normal Operation of a Vessel

139.10 Ballast tanks.
139.11 Bilges.
139.12 Boilers.
139.13 Cathodic protection.
139.14 Chain lockers.
139.15 Decks.
139.16 Desalination and purification systems.
139.17 Elevator pits.
139.18 Exhaust gas emission control systems.
139.19 Fire protection equipment.
139.20 Gas turbines.
139.21 Graywater systems.
139.22 Hulls and associated niche areas.
139.23 Inert gas systems.
139.24 Motor gasoline and compensating systems.
139.25 Non-oily machinery.
139.26 Pools and spas.
139.27 Refrigeration and air conditioning.
139.28 Seawater piping.
139.29 Sonar domes.

Subpart D—Special Area Requirements

139.40 Federally-protected waters.

Subpart E—Procedures for States To Request Changes to Standards, Regulations, or Policy Promulgated by the Administrator

139.50 Petition by a Governor for the Administrator to establish an emergency order or review a standard, regulation, or policy.
139.51 Petition by a Governor for the Administrator to establish enhanced Great Lakes System requirements.
139.52 Application by a State for the Administrator to establish a State No-Discharge Zone.
Appendix A to Part 139—Federally-Protected Waters

Subpart A—Scope

§ 139.1 Coverage.

(a) *Vessel discharges.* Except as provided in paragraph (b) of this section, this part applies to:

(1) Any discharge incidental to the normal operation of a vessel; and

(2) Any discharge incidental to the normal operation of a vessel (such as most graywater) that is commingled with sewage, subject to the conditions that:

(i) Nothing in this part prevents a state from regulating sewage discharges; and

(ii) Any such commingled discharge must comply with all applicable requirements of:

(A) This part; and

(B) Any law applicable to the discharge of sewage.

(b) *Exclusions.* This part does not apply to any discharge:

(1) Incidental to the normal operation of:

(i) A vessel of the Armed Forces subject to 33 U.S.C. 1322(n);

(ii) A recreational vessel subject to 33 U.S.C. 1322(o);

(iii) A small vessel or fishing vessel, except that this part applies to any discharge of ballast water from a small vessel or fishing vessel; or

(iv) A floating craft that is permanently moored to a pier, including a floating casino, hotel, restaurant, or bar; or

(2) That results from, or contains material derived from, an activity other than the normal operation of the vessel, such as material resulting from an industrial or manufacturing process onboard the vessel; or

(3) If compliance with this part would compromise the safety of life at sea.

(c) *Area of coverage.* The standards in this part apply to any vessel identified in paragraph (a) of this section, not otherwise excluded in paragraph (b) of this section, while operating in the waters of the United States or the waters of the contiguous zone.

(d) *Effective date.* (1) The standards in this part are effective beginning on the date upon which regulations promulgated by the Secretary governing the design, construction, testing, approval, installation, and use of marine pollution control devices as necessary to ensure compliance with the standards are final, effective, and enforceable.

(2) As of the effective date identified in paragraph (d)(1) of this section, the requirements of the Vessel General Permit and all regulations promulgated by the Secretary pursuant to Section 1101 of the Nonindigenous Aquatic Nuisance Prevention and Control Act of

1990 (16 U.S.C. 4711), including the regulations contained in 46 CFR 162.060 and 33 CFR part 151 subparts C and D, as in effect on December 3, 2018, shall be deemed repealed and have no force or effect.

§ 139.2 Definitions.

The following definitions apply for the purposes of this part. Terms not defined in this section have the meaning as defined under the Clean Water Act (CWA) and applicable regulations.

Administrator means the Administrator of the Environmental Protection Agency. (source: CWA section 101(d)).

Aquatic Nuisance Species (ANS) means a nonindigenous species that threatens the diversity or abundance of a native species; the ecological stability of waters of the United States or the waters of the contiguous zone; or a commercial, agricultural, aquacultural, or recreational activity that is dependent on waters of the United States or the waters of the contiguous zone. (source: CWA section 312(p)(1)(A)).

Ballast tank means any tank or hold on a vessel used for carrying ballast water, whether or not the tank or hold was designed for that purpose. (source: 33 CFR 151.1504).

Ballast water means any water, to include suspended matter and other materials taken onboard a vessel, to control or maintain trim, draught, stability, or stresses of the vessel, regardless of the means by which any such water or suspended matter is carried; or during the cleaning, maintenance, or other operation of a ballast tank or ballast water management system of the vessel. The term does not include any substance that is added to that water that is directly related to the operation of a properly functioning ballast water management system. (source: CWA section 312(p)(1)(B)).

Ballast water exchange means the replacement of ballast water in a ballast tank using one of the following methods:

(1) Flow-through exchange, in which ballast water is flushed out by pumping in mid-ocean water at the bottom of the tank if practicable, and continuously overflowing the tank from the top, until three full volumes of tank water have been changed.

(2) Empty and refill exchange, in which ballast water is pumped out until the pump loses suction, after which the ballast tank is refilled with water from the mid-ocean. (source: CWA section 312(p)(1)(D)).

Ballast water management system means any marine pollution control device (including all ballast water treatment equipment, ballast tanks, pipes, pumps, and all associated control and monitoring equipment) that processes ballast water to kill, render nonviable, or remove organisms; or to avoid the uptake or discharge of organisms. (source: CWA section 312(p)(1)(E)).

Bioaccumulative means the failure to meet one or more of the criteria established in the definition of *Not Bioaccumulative.*

Biodegradable for the following classes of substances, means (all percentages are on a weight/weight concentration basis):

(1) *For oils:* At least 90% of the formulation (for any substances present above 0.1%) demonstrates, within 28 days, either the removal of at least 70% of dissolved organic carbon (DOC), production of at least 60% of the theoretical carbon dioxide, or consumption of at least 60% of the theoretical oxygen demand). Up to 5% of the formulation may be non-biodegradable but may not be bioaccumulative. The remaining 5% must be inherently biodegradable.

(2) *For greases:* At least 75% of the formulation (for any substances present above 0.1%) demonstrates, within 28 days, either the removal of at least 70% of DOC, production of at least 60% of the theoretical carbon dioxide, or consumption of at least 60% of the theoretical oxygen demand). Up to 25% of the formulation may be non-biodegradable or inherently biodegradable but may not be bioaccumulative.

(3) *For soaps, cleaners, and detergents:* A product that demonstrates, within 28 days, either the removal of at least 70% of DOC, production of at least 60% of the theoretical carbon dioxide, or consumption of at least 60% of the theoretical oxygen demand.

(4) *For biocides:* A compound or mixture that, within 28 days, demonstrates removal of at least 70% of DOC and production of at least 60% of the theoretical carbon dioxide.

Biofouling means the accumulation of aquatic organisms such as micro-organisms, plants, and animals on surfaces and structures immersed in or exposed to the aquatic environment. (source: Modified from IMO MEPC.207(62)).

Broom clean means a condition in which care has been taken to prevent or eliminate any visible concentration of tank or cargo residues, so that any remaining tank or cargo residues consist only of dust, powder, or isolated and random pieces, none of which exceeds one inch in diameter. (source: Modified from 33 CFR 151.66).

Captain of the Port (COTP) zone means such zone as established by the Secretary pursuant to sections 92, 93, and 633 of title 14, United States Code. (source: CWA section 312(p)(1)(J)).

Commercial vessel means, except as the term is used in § 139.10(g), any vessel used in the business of transporting property for compensation or hire, or in transporting property in the business of the owner, lessee, or operator of the vessel. (source: CWA section 312(a)(10)). As used in § 139.10(g), the term *commercial vessel* means a vessel operating between:

(1) Two ports or places of destination within the Pacific Region; or

(2) A port or place of destination within the Pacific Region and a port or place of destination on the Pacific Coast of Canada or Mexico north of parallel 20 degrees north latitude, inclusive of the Gulf of California. (source: CWA section 312(p)(10)(C)(i)).

Constructed in respect of a vessel means a stage of construction when:

(1) The keel of a vessel is laid;

(2) Construction identifiable with the specific vessel begins;

(3) Assembly of the vessel has commenced and comprises at least 50 tons or 1% of the estimated mass of all structural material of the vessel, whichever is less; or

(4) The vessel undergoes a major conversion. (source: 33 CFR 151.1504).

Contiguous zone means the entire zone established by the United States under Article 24 of the Convention on the Territorial Sea and the Contiguous Zone. (source: CWA section 502(9)).

Discharge means ''discharge incidental to the normal operation of a vessel'' as defined in this section.

Discharge incidental to the normal operation of a vessel means a discharge, including—

(1) Graywater, bilge water, cooling water, weather deck runoff, ballast water, oil water separator effluent, and any other pollutant discharge from the operation of a marine propulsion system, shipboard maneuvering system, crew habitability system, or installed major equipment, such as an aircraft carrier elevator or a catapult, or from a protective, preservative, or absorptive application to the hull of the vessel; and

(2) A discharge in connection with the testing, maintenance, and repair of a system described in clause (1):

(i) Whenever the vessel is waterborne; and does not include—

(A) A discharge of rubbish, trash, garbage, or other such material discharged overboard;

(B) An air emission resulting from the operation of a vessel propulsion system,

motor driven equipment, or incinerator; or

(3) A discharge that is not covered by § 122.3 of this chapter (as in effect on February 10, 1996). (source: CWA section 312).

Discharge of oil in such quantities as may be harmful means any discharge of oil, including an oily mixture, in such quantities identified in 40 CFR 110.3 and excluding those discharges specified in 40 CFR 110.5.

Empty ballast tank means a tank that has previously held ballast water that has been drained to the limit of the functional or operational capabilities of the tank (such as loss of pump suction); is recorded as empty on a vessel log; and may contain unpumpable residual ballast water and sediment. (source: CWA section 312(p)(1)(K)).

Environmentally Acceptable Lubricant (EAL) means a lubricant, including any oil or grease, that is ''biodegradable,'' ''minimally-toxic,'' and ''not bioaccumulative,'' as these terms are defined in § 139.2.

Exclusive Economic Zone (EEZ) means the area established by Presidential Proclamation Number 5030, dated March 10, 1983 which extends from the base line of the territorial sea of the United States seaward 200 nautical miles, and the equivalent zone of Canada. (source: 33 CFR 151.1504).

Existing vessel means a vessel constructed, or where construction has begun, prior to the date identified in regulations promulgated by the Secretary as described in § 139.1(e).

Federally-protected waters means any waters of the United States or the waters of the contiguous zone subject to federal protection, in whole or in part, for conservation purposes, located within any area listed in Appendix A, as designated under:

(1) National Marine Sanctuaries designated under the National Marine Sanctuaries Act (16 U.S.C. 1431 *et seq.*);

(2) Marine National Monuments designated under the Antiquities Act of 1906;

(3) A unit of the National Park System, including National Preserves and National Monuments, designated by the National Park Service within the U.S. Department of the Interior;

(4) A unit of the National Wildlife Refuge System, including Wetland Management Districts, Waterfowl Production Areas, National Game Preserves, Wildlife Management Areas, and National Fish and Wildlife Refuges designated under the National Wildlife Refuge System Administration Act of 1966 as amended by the National Wildlife Refuge System Improvement Act of 1997;

(5) National Wilderness Areas designated under the Wilderness Act of 1964 (16 U.S.C. 1131–1136); and

(6) Any component designated under the National Wild and Scenic Rivers Act of 1968, 16 U.S.C. 1273.

Fouling rating means the scale developed by the U.S. Navy (Naval Ships' Technical Manual, Chapter 81, Waterborne Underwater Hull Cleaning of Navy Ships, Revision 5, S9086–CQ–STM–010, 2006) that assigns a fouling rating (FR) number to the 10 most frequently encountered biofouling patterns. Numbers are assigned on a scale from 0 to 100, in 10-point increments, with the lowest number representing a clean hull and the higher numbers representing biofouling organism populations of increasing variety and severity.

Graywater means drainage from dishwater, shower, laundry, bath, and washbasin drains. It does not include drainage from toilets, urinals, hospitals, animal spaces, and cargo spaces. (source: 33 CFR 151.05).

Great Lakes means Lake Ontario, Lake Erie, Lake Huron (including Lake Saint Clair), Lake Michigan, Lake Superior, and the connecting channels (Saint Mary's River, Saint Clair River, Detroit River, Niagara River, and Saint Lawrence River to the Canadian border), and includes all other bodies of water within the drainage basin of such lakes and connecting channels. (source: CWA section 118(a)(3)(B)).

Great Lakes State means any of the states of Illinois, Indiana, Michigan, Minnesota, New York, Ohio, Pennsylvania, and Wisconsin. (source: CWA section 312(p)(1)(M)).

Gross Register Tonnage (GRT) means the gross tonnage measurement of the vessel under the Regulatory Measurement System. (source: 46 CFR 69.9).

Gross Tonnage ITC (GT ITC) means the gross tonnage measurement of the vessel under the Convention Measurement System. (source: 46 CFR 69.9).

Impaired waterbody means a waterbody identified by a state, tribe, or EPA pursuant to section 303(d) of the CWA as not meeting applicable state or tribal water quality standards (these waters are called ''water quality limited segments'' under 40 CFR 130.2(j)) and includes both waters with approved or established Total Maximum Daily Loads (TMDL) and those for which a TMDL has not yet been approved or established.

Inherently biodegradable means the property of being able to be biodegraded when subjected to sunlight, water, and naturally occurring microbes to the following level: Greater than 70% biodegraded after 28 days using OECD Test Guidelines 302C or greater than 20% but less than 60% biodegraded after 28 days using OECD Test Guidelines 301 A–F.

Internal Waters means:

(1) With respect to the United States, the waters shoreward of the territorial sea baseline, including waters of the Great Lakes extending to the maritime boundary with Canada, and

(2) With respect to any other nation, the waters shoreward of its territorial sea baseline, as recognized by the United States. (source: Modified from 33 CFR 2.24 as referenced in CWA section 312(p)(1)(O)).

Live or living, notwithstanding any other provision of law (including regulations), does not:

(1) Include an organism that has been rendered nonviable; or

(2) Preclude the consideration of any method of measuring the concentration of organisms in ballast water that are capable of reproduction. (source: CWA Section 312(p)(6)(D)(i)).

Major conversion means a conversion of an existing vessel:

(1) That substantially alters the dimensions or carrying capacity of the vessel; or

(2) That changes the type of the vessel; or

(3) The intent of which, in the opinion of the government of the country under whose authority the vessel is operating, is substantially to prolong its life; or

(4) Which otherwise so alters the vessel that, if it were a new vessel, it would become subject to relevant provisions of MARPOL not applicable to it as an existing vessel. (source: 33 CFR 151.05).

Marine Growth Prevention System (MGPS) means an anti-fouling system used for the prevention of biofouling accumulation in seawater piping systems and sea chests. (source: Modified from IMO MEPC.207(62)).

Marine Pollution Control Device (MPCD) means any equipment or management practice (or combination of equipment and management practice) for installation and use onboard a vessel that is: Designed to receive, retain, treat, control, or discharge a discharge incidental to the normal operation of a vessel; and determined by the Administrator and the Secretary to be the most effective equipment or management practice (or combination of equipment and a management practice) to reduce the environmental impacts of the discharge, consistent with the factors considered in developing the

standards in this part. (source: CWA section 312(p)(1)(P)).

Master means the officer having command of a vessel. (source: 46 CFR 10.107).

Mid-ocean means greater than 200 nautical miles (NM) from any shore, except when a ballast water exchange or saltwater flush outside of 50 NM is authorized in this part, then it means greater than 50 NM from any shore. For regular maintenance of ballast tanks to remove sediments, it means outside the waters of the United States or the waters of the contiguous zone.

Minimally-Toxic means, for lubricants (all percentages are on a weight/weight basis):

(1) If both the complete formulation and the main constituents (that is constituents making up greater than or equal to 5% of the complete formulation) are evaluated, then the acute aquatic toxicity of lubricants, other than greases and total loss lubricants, must be at least 100 mg/L and the LC50 of greases and total loss lubricants must be at least 1000 mg/L; or

(2) If each constituent is evaluated, rather than the complete formulation and main constituents, then for each constituent present above 0.1%: Up to 20% of the formulation can have an LC50 greater than 10 mg/L but less than 100 mg/L and an NOEC greater than 1 mg/L but less than 10 mg/L; up to 5% of the formulation can have an LC50 greater than 1 mg/L but less than 10 mg/L and an NOEC greater than 0.1 mg/L but less than 1 mg/L; and up to 1% of the formulation can have an LC50 less than 1 mg/L and an NOEC less than 0.1 mg/L.

Minimally-toxic, phosphate-free, and biodegradable means properties of a substance or mixture of substances that:

(1) Have an acute aquatic toxicity value corresponding to a concentration greater than 10 ppm;

(2) Do not produce residuals with an LC50 less than 10 ppm;

(3) Are not bioaccumulative;

(4) Do not cause the pH of the receiving water to go below 6.0 or above 9.0;

(5) Contain, by weight, 0.5% or less of phosphates or derivatives of phosphate; and

(6) Are biodegradable.

Minimize means to reduce or eliminate to the extent achievable using any control measure that is technologically available and economically practicable and achievable and supported by demonstrated best management practices such that compliance can be documented in shipboard logs and plans.

Niche Areas means areas on a ship that may be more susceptible to biofouling due to different hydrodynamic forces, susceptibility to coating system wear or damage, or being inadequately, or not, painted (*e.g.,* sea chests, bow thrusters, propeller shafts, inlet gratings, drydock support strips) (source: MEPC.207(62)).

Not bioaccumulative means any of the following:

(1) The partition coefficient in the marine environment is log KOW less than 3 or greater than 7;

(2) The molecular mass is greater than 800 Daltons;

(3) The molecular diameter is greater than 1.5 nanometer;

(4) The bioconcentration factor (BCF) or bioaccumulation factor (BAF) is less than 100 L/kg; or

(5) The polymer with molecular weight fraction below 1,000 g/mol is less than 1%.

Oil means oil of any kind or in any form, including but not limited to any petroleum, fuel oil, environmentally acceptable lubricant, sludge, oil refuse, and oil mixed with wastes other than dredged spoil. (source: CWA section 311(a)(1)).

Oily mixture means a mixture, in any form, with any oil content, including, but not limited to:

(1) Slops from bilges;

(2) Slops from oil cargoes (such as cargo tank washings, oily waste, and oily refuse);

(3) Oil residue; and

(4) Oily ballast water from cargo or fuel oil tanks. (source: 33 CFR 151.05).

Oil-to-Sea interface means any seal or surface on ship-board equipment where the design is such that oil or oily mixtures can escape directly into surrounding waters. Oil-to-sea interfaces are found on equipment that is subject to submersion as well as equipment that can extend overboard.

Organism means an animal, including fish and fish eggs and larvae; a plant; a pathogen; a microbe; a virus; a prokaryote (including any archean or bacterium); a fungus; and a protist. (source: CWA section 312(p)(1)(R)).

Pacific region means any Federal or state water adjacent to the State of Alaska, California, Hawaii, Oregon, or Washington; and extending from shore. The term includes the entire exclusive economic zone (as defined in Section 1001 of the Oil Pollution Act of 1990 (33 U.S.C. 2701)) adjacent to each Pacific Region State. (source: CWA section 312(p)(1)(S)).

Port or place of destination means a port or place to which a vessel is bound to anchor, to moor, or be otherwise secured. (source: CWA section 312(p)(1)(T)).

Reception facility refers to any fixed, floating, or mobile facility capable of receiving wastes and residues from ships and fit for that purpose. (source: Modified from MEPC.1/Circ.834/Rev.1).

Render nonviable means, with respect to an organism in ballast water, the action of a ballast water management system that renders the organism permanently incapable of reproduction following treatment. (source: CWA section 312(p)(1)(U)).

Saltwater flush means the addition of as much mid-ocean water into each empty ballast tank of a vessel as is safe for the vessel and crew; and the mixing of the flush water with residual ballast water and sediment through the motion of the vessel; and the discharge of that mixed water, such that the resultant residual water remaining in the tank has the highest salinity possible; and is at least 30 parts per thousand. A saltwater flush may require more than one fill-mix-empty sequence, particularly if only small quantities of water can be safely taken onboard a vessel at one time. (source: CWA section 312(p)(1)(V)).

Scheduled drydocking means hauling out of a vessel or placing a vessel in a drydock or slipway for an examination of all accessible parts of the vessel's underwater hull and all through-hull fittings and does not include emergency drydocking and emergency hull repairs. (source: Modified from 46 CFR 31.10–21).

Seagoing vessel means a vessel in commercial service that operates beyond either the boundary line established by 46 CFR part 7 or the St. Lawrence River west of a rhumb line drawn from Cap des Rosiers to Point-Sud-Oeste (West Point), Anticosti Island, and west of a line along 63′ W longitude from Anticosti Island to the north shore of the St. Lawrence River. It does not include a vessel that navigates exclusively on internal waters. (source: Modified from 33 CFR 151.2005).

Secretary means the Secretary of the department in which the Coast Guard is operating. (source: CWA section 312(p)(1)(W)).

Small vessel or fishing vessel means a vessel with a vessel length that is less than 79 feet; or a fishing vessel, fish processing vessel, or fish tender vessel (as those terms are defined in Section 2101 of title 46, United States Code), regardless of the vessel length. (source: CWA section 312(p)(1)(Y)).

Toxic or hazardous materials means any toxic pollutant as defined in 40 CFR 401.15 or any hazardous material as defined in 49 CFR 171.8.

Underway means a vessel is not at anchor, or made fast to the shore, or aground. (source: 33 CFR 83.03).

Vessel General Permit (VGP) means the permit that is the subject of the notice of final permit issuance entitled ''Final National Pollutant Discharge Elimination System (NPDES) General Permit for Discharges Incidental to the Normal Operation of a Vessel'' (78 FR 21938 (April 12, 2013)). (source: CWA section 312(p)(1)(Z)).

Vessel length means the horizontal distance between the foremost part of a vessel's stem to the aftermost part of its stern, excluding fittings and attachments. (source: 33 CFR 151.05).

Visible sheen means, with respect to oil and oily mixtures, a silvery or metallic sheen or gloss, increased reflectivity, visual color, iridescence, or an oil slick on the surface of the water.

Voyage means any transit by a vessel traveling from or destined for any United States port or place.

§ 139.3 Other Federal laws.

(a) Except as expressly provided in this part, nothing in this part affects the applicability to a vessel of any other provision of Federal law, including:

(1) Sections 311 and 312 of the Federal Water Pollution Control Act (33 U.S.C. 1321 *et seq.* and 33 U.S.C. 1322 *et seq.*), also known as the CWA;

(2) The Act to Prevent Pollution from Ships (33 U.S.C. 1901 *et seq.*);

(3) Title X of the Coast Guard Authorization Act of 2010 (33 U.S.C. 3801 *et seq.*), also known as the Clean Hulls Act;

(4) The Federal Insecticide, Fungicide, and Rodenticide Act (7 U.S.C. 136 *et seq.*); and

(5) The National Marine Sanctuaries Act (16 U.S.C. 1431 *et seq.*) and implementing regulations found at 15 CFR part 922 and 50 CFR part 404.

(b) Nothing in this part affects the authority of the Secretary of Commerce or the Secretary of the Interior to administer any land or waters under the administrative control of the Secretary of Commerce or the Secretary of the Interior, respectively.

(c) Nothing in this part shall be construed to affect, supersede, or relieve the master of any otherwise applicable requirements or prohibitions associated with a vessel's right to innocent passage as provided for under customary international law.

Subpart B—General Standards for Discharges Incidental to the Normal Operation of a Vessel

§ 139.4 General operation and maintenance.

(a) The requirements in paragraph (b) of this section apply to any discharge incidental to the normal operation of a vessel subject to regulation under this part.

(b) Vessels must implement the following practices:

(1) Minimize discharges.

(2) Discharge while underway when practical and as far from shore as practical.

(3) Addition of any materials to a discharge, other than for treatment of the discharge, that is not incidental to the normal operation of the vessel is prohibited.

(4) Dilution of any discharge for the purpose of meeting any standard in this part is prohibited.

(5) Any material used onboard that will be subsequently discharged (*e.g.,* disinfectants, cleaners, biocides, coatings, sacrificial anodes) must:

(i) Be used only in the amount necessary to perform the intended function of that material;

(ii) Not contain any materials banned for use in the United States; and

(iii) If subject to FIFRA registration, be used according to the FIFRA label. Proper use includes labeling requirements for proper application sites, rates, frequency of application, and methods; maintenance; removal; and storage and disposal of wastes and containers.

(6) Any toxic or hazardous materials onboard which might wash overboard or dissolve as a result of contact with precipitation or surface water spray must be stored in appropriately sealed, labeled, and secured containers and be located in areas of the vessel that minimize exposure to ocean spray and precipitation consistent with vessel design, unless the master determines this would interfere with essential vessel operations or safety of the vessel or would violate any applicable regulations that establish specifications for safe transportation, handling, carriage, and storage of toxic or hazardous materials.

(7) Containers holding toxic or hazardous materials must not be overfilled and incompatible materials must not be mixed in containers.

(8) The overboard discharge or disposal of containers with toxic or hazardous materials is prohibited.

(9) Prior to washing the cargo compartment or tank and discharging washwater overboard, any cargo compartment or tank must be in broom clean condition or its equivalent, to minimize any remaining residue from these areas.

(10) Topside surfaces (*e.g.,* exposed decks, hull above waterline, and related appurtenances) must be maintained to minimize the discharge of cleaning compounds, paint chips, non-skid material fragments, and other materials associated with exterior surface preservation.

(11) Painting techniques on topside surfaces must minimize the discharge of paint.

(12) Discharge of unused paint and coatings is prohibited.

(13) Any equipment that may release, drip, leak, or spill oil or oily mixtures, fuel, or other toxic or hazardous materials that may be discharged, including to the bilge, must be maintained to minimize or eliminate the discharge of pollutants.

§ 139.5 Biofouling management.

(a) The requirements in paragraph (b) of this section apply to any vessel subject to regulation under this part.

(b) A vessel-specific biofouling management plan must be developed and followed with a goal to prevent macrofouling, thereby minimizing the potential for the introduction and spread of ANS. A biofouling management plan is a holistic strategy that considers the operational profile of the vessel, identifies the appropriate antifouling systems, and details the biofouling management practices for specific areas of the vessel. The plan elements must prioritize procedures and strategies to prevent macrofouling.

§ 139.6 Oil management.

(a) The requirements in paragraphs (b) through (d) of this section apply to vessel equipment and operations that use or discharge oil or oily mixtures.

(b) The following discharges are prohibited:

(1) Used or spent oil no longer being used for its intended purpose; and

(2) Oil in such quantities as may be harmful.

(c) During fueling, maintenance, and other vessel operations, control and response measures must be used to prevent, minimize, and contain spills and overflows.

(d) An environmentally acceptable lubricant (EAL) must be used in any oil-to-sea interface unless such use is technically infeasible.

Subpart C—Standards for Specific Discharges Incidental to the Normal Operation of a Vessel

§ 139.10 Ballast tanks.

(a) *Applicability.* Except for any vessel otherwise excluded in paragraph (b) of this section, the requirements in paragraphs (b) through (h) of this section apply to any vessel equipped with one or more ballast tanks.

(b) *Exclusions.* The requirements of § 139.10 do not apply to the following vessels:

(1) A vessel that continuously takes on and discharges ballast water in a flow-through system, if the Administrator determines that system cannot materially contribute to the spread or introduction of ANS;

(2) A vessel in the National Defense Reserve Fleet scheduled for disposal, if the vessel does not have an operable BWMS;

(3) A vessel that discharges ballast water consisting solely of water taken onboard from a public or commercial source that, at the time the water is taken onboard, meets the applicable requirements or permit requirements of the Safe Drinking Water Act (42 U.S.C. 300f *et seq.*) or Health Canada's *Guidelines for Canadian Drinking Water Quality;*

(4) A vessel that carries all permanent ballast water in sealed tanks that are not subject to discharge except under emergency circumstances; or

(5) A vessel that only discharges ballast water to a reception facility.

(c) *Ballast Water Best Management Practices (BMPs).* (1) Any vessel equipped with ballast tanks must minimize the discharge and uptake of ANS by adhering to the following practices:

(i) Ballast tanks must be periodically flushed and cleaned to remove sediment and biofouling organisms;

(ii) When practicable and available, high sea suction must be used when in port or where clearance to the bottom of the waterbody is less than 5 meters to the lower edge of the sea chest;

(iii) When practicable, ballast water pumps must be used in port instead of draining by gravity to empty ballast tanks; and

(iv) Any sea chest screen must be maintained and fully intact.

(2) Discharge of any sediment or water from ballast tank cleaning is prohibited.

(3) Discharge or uptake of ballast water must be avoided in areas with coral reefs; discharge and uptake should be conducted as far from coral reefs as possible.

(4) A vessel-specific ballast water management plan must be developed and followed to minimize the potential for the introduction and spread of ANS. A ballast water management plan is a holistic strategy that considers the operational profile of the vessel and the appropriate ballast water management practices and systems.

(d) *Ballast Water Discharge Standard.* Unless exempted in paragraph (d)(3) of this section, any ballast water discharge must meet the following numeric discharge standard:

(1) Biological parameters (expressed as instantaneous maximums).

(i) Organisms greater than or equal to 50 micrometers in minimum dimension: Less than 10 living organisms per cubic meter.

(ii) Organisms less than 50 micrometers and greater than or equal to 10 micrometers: Less than 10 living organisms per milliliter (mL).

(iii) Toxicogenic *Vibrio cholerae* (serotypes O1 and O139): Less than 1 colony forming unit (cfu) per 100 mL.

(iv) *Escherichia coli:* A concentration of less than 250 cfu per 100 mL.

(v) Intestinal enterococci: A concentration of less than 100 cfu per 100 mL.

(2) Biocide parameters (expressed as instantaneous maximums).

(i) Chlorine dioxide: For any discharge from a BWMS using chlorine dioxide, chlorine dioxide must not exceed 200 μg/L.

(ii) Total residual oxidizers: For any discharge from a BWMS using chlorine or ozone, total residual oxidizers must not exceed 100 μg/L.

(iii) Peracetic acid: For any discharge from a BWMS using peracetic acid, peracetic acid must not exceed 500 μg/L.

(iv) Hydrogen peroxide: For any discharge from a BWMS using peracetic acid, hydrogen peroxide must not exceed 1,000 μg/L.

(3) Exemptions: The ballast water discharge standards in paragraphs (d)(1) and (2) of this section do not apply to any vessel that:

(i) Is less than or equal to 3,000 GT ITC (1,600 GRT if GT ITC is not assigned), and does not operate outside of the EEZ;

(ii) Is a non-seagoing, unmanned, unpowered barge, except any barge that is part of a dedicated vessel combination such as an integrated or articulated tug and barge unit;

(iii) Takes on and discharges ballast water exclusively in the contiguous portions of a single COTP Zone;

(iv) Does not travel more than 10 NM and passes through no locks;

(v) Is a vessel that operates exclusively in the Great Lakes and the St. Lawrence River west of a rhumb line drawn from Cap des Rosiers to Point-Sud-Oeste (West Point), Anticosti Island, and west of a line along 63 W. longitude from Anticosti Island to the north shore of the St. Lawrence River;

(vi) Is enrolled in the USCG Shipboard Technology Evaluation Program (STEP); or

(vii) Discharges ballast water prior to an applicable ballast water discharge standard compliance date established in regulations promulgated by the Secretary as described in 139.1(d).

(e) *Ballast Water Exchange and Saltwater Flushing.* Except for any vessel identified in paragraph (e)(3), (f), or (g) of this section, prior to an applicable ballast water discharge standard compliance date established in regulations promulgated by the Secretary as described in § 139.1(d), any vessel must meet the requirements in paragraphs (e)(1) and (2) of this section.

(1) Any vessel that carries ballast water taken on in areas less than 200 NM from any shore that will subsequently operate outside the EEZ and more than 200 NM from any shore must:

(i) Conduct ballast water exchange in waters not less than 200 NM from any shore prior to discharging that ballast water; and

(ii) Commence ballast water exchange not less than 200 NM from any shore and as early in the vessel voyage as practicable.

(2) For any ballast tank that is empty or contains unpumpable residual water on a vessel bound for a port or place of destination subject to the jurisdiction of the United States, the master must, prior to arriving at that port or place of destination, either:

(i) Seal the tank so that there is no discharge or uptake and subsequent discharge of ballast water, or

(ii) Conduct a saltwater flush:

(A) Not less than 200 NM from any shore for a voyage originating outside the United States or Canadian EEZ; or

(B) not less than 50 NM from any shore for a voyage originating within the United States or Canadian EEZ.

(3) Exceptions: Paragraphs (e)(1) and (2), do not apply under any of the following circumstances:

(i) If the unpumpable residual waters and sediments of an empty ballast tank were subject to treatment, in compliance with applicable requirements, through a BWMS approved or accepted by the Secretary;

(ii) Except as otherwise required under this part, if the unpumpable residual waters and sediments of an empty ballast tank were sourced solely within:

(A) The same port or place of destination; or

(B) Contiguous portions of a single COTP Zone;

(iii) If complying with an applicable requirement of this paragraph (e):

(A) Would compromise the safety of the vessel; or

(B) Is otherwise prohibited by any Federal, Canadian, or international law (including regulations) pertaining to vessel safety;

(iv) If design limitations of an existing vessel prevent a ballast water exchange or saltwater flush from being conducted in accordance with this paragraph (e); or

(v) If the vessel is operating exclusively within the internal waters of the United States and Canada.

(f) *Vessels entering the Great Lakes.* (1) Ballast Water Exchange—Except as provided in paragraph (f)(2) of this section, any vessel entering the St. Lawrence Seaway through the mouth of the St. Lawrence River must conduct a complete ballast water exchange or saltwater flush:

(i) Not less than 200 NM from any shore for a voyage originating outside the EEZ; or

(ii) Not less than 50 NM from any shore for a voyage originating within the EEZ.

(2) Exceptions: The requirements of paragraph (f)(1) of this section do not apply to any vessel if:

(i) Complying with paragraph (f)(1) of this section:

(A) Would compromise the safety of the vessel; or

(B) Is otherwise prohibited by any Federal, Canadian, or international law (including regulations) pertaining to vessel safety.

(ii) Design limitations of an existing vessel prevent a ballast water exchange from being conducted in accordance with an applicable requirement of paragraph (f)(1) of this section.

(iii) The vessel has no residual ballast water or sediments onboard.

(iv) The vessel retains all ballast water while in waters subject to the requirement.

(v) The empty ballast tanks on the vessel are sealed in a manner that ensures that no discharge or uptake occurs, and any subsequent discharge of ballast water is subject to the requirement.

(g) *Pacific waters.* (1) Ballast Water Exchange:

(i) Except as provided in paragraphs (g)(1)(ii) and (g)(3) of this section, any vessel that operates either between two ports or places of destination within the Pacific Region; or a port or place of destination within the Pacific Region and a port or place of destination on the Pacific Coast of Canada or Mexico north of parallel 20 degrees north latitude, inclusive of the Gulf of California, must conduct a complete ballast water exchange in waters more than 50 NM from shore.

(ii) Exemptions: The requirements of paragraph (g)(1)(i) of this section do not apply to any vessel:

(A) Using, in compliance with applicable requirements, a type-approved BWMS approved or accepted by the Secretary.

(B) Voyaging:

(*1*) Between or to a port or place of destination in the State of Washington, if the ballast water to be discharged from the commercial vessel originated solely from waters located between the parallel 46 degrees north latitude, including the internal waters of the Columbia River, and the internal waters of Canada south of parallel 50 degrees north latitude, including the waters of the Strait of Georgia and the Strait of Juan de Fuca;

(*2*) Between ports or places of destination in the State of Oregon, if the ballast water to be discharged from the commercial vessel originated solely from waters located between the parallel 40 degrees north latitude and the parallel 50 degrees north latitude;

(*3*) Between ports or places of destination in the State of California within the San Francisco Bay area east of the Golden Gate Bridge, including the Port of Stockton and the Port of Sacramento, if the ballast water to be discharged from the commercial vessel originated solely from ports or places within that area;

(*4*) Between the Port of Los Angeles, the Port of Long Beach, and the El Segundo offshore marine oil terminal, if the ballast water to be discharged from the commercial vessel originated solely from the Port of Los Angeles, the Port of Long Beach, or the El Segundo offshore marine oil terminal;

(*5*) Between a port or place of destination in the State of Alaska within a single COTP Zone;

(*6*) Between ports or places of destination in different counties of the State of Hawaii, if the vessel conducts a complete ballast water exchange in waters that are more than 10 NM from shore and at least 200 meters deep; or

(*7*) Between ports or places of destination within the same county of the State of Hawaii, if the vessel does not transit outside state marine waters during the voyage.

(2) Low-Salinity Ballast Water:

(i) Except as provided in paragraphs (g)(2)(ii) and (g)(3) of this section, a complete ballast water exchange must be conducted for any commercial vessel that transports ballast water sourced from waters with a measured salinity of less than 18 parts per thousand and voyages to a Pacific Region port or place of destination with a measured salinity of less than 18 parts per thousand:

(A) Not less than 50 NM from shore, if the ballast water was sourced from a Pacific Region port or place of destination.

(B) More than 200 NM from shore, if the ballast water was not sourced from a Pacific Region port or place of destination.

(ii) Exception: The requirements of paragraph (g)(2)(i) of this section do not apply to any vessel voyaging to a port or place of destination in the Pacific Region that is using, in compliance with applicable requirements, a type-approved BWMS accepted by the Secretary, or a type-approved BWMS approved by the secretary to achieve the following numeric discharge standard for biological parameters (expressed as instantaneous maximums):

(A) Organisms greater than or equal to 50 micrometers in minimum dimension: Less than 1 living organism per 10 cubic meters.

(B) Organisms less than 50 micrometers and greater than or equal to 10 micrometers: Less than 1 living organisms per 100 milliliters (mL).

(C) Toxicogenic *Vibrio cholerae* (serotypes O1 and O139): Less than 1 colony forming unit (cfu) per 100 mL or less than 1 cfu per gram of wet weight of zoological samples.

(D) *Escherichia coli:* Less than 126 cfu per 100 mL.

(E) Intestinal enterococci: Less than 33 cfu per 100 mL.

(3) General Exceptions: The requirements of paragraphs (g)(1) and (2) of this section do not apply to a commercial vessel if:

(i) Complying with the requirement would compromise the safety of the commercial vessel.

(ii) If design limitations of an existing vessel, prevent a ballast water exchange from being conducted in accordance with paragraphs (g)(1) and (2) of this section, as applicable.

(iii) The commercial vessel:

(A) Has no residual ballast water or sediments onboard; or

(B) Retains all ballast water while in waters subject to those requirements.

(iv) Empty ballast tanks on the commercial vessel are sealed in a manner that ensures that:

(A) No discharge or uptake occurs; and

(B) Any subsequent discharge of ballast water is subject to those requirements.

(h) *Federally-protected waters.* Additional standards applicable to

discharges from ballast tanks when a vessel is operating in federally-protected waters are contained in § 139.40(b).

§ 139.11 Bilges.

(a) The requirements in paragraphs (b) through (d) of this section apply to discharges from the bilge consisting of water and residue that accumulates in a lower compartment of the vessel's hull below the waterline. This includes any water and residue from a cargo area that comes into contact with oily materials or a below-deck parking area or other storage area for motor vehicles or other motorized equipment.

(b) The discharge of bilgewater from any vessel must not contain any flocculants or other additives except when used with an oily water separator or to maintain or clean equipment. The use of any additives to remove the appearance of a visible sheen is prohibited.

(c) For any vessel of 400 GT ITC (400 GRT if GT ITC is not assigned) and above, the discharge of bilgewater must occur when the vessel is underway.

(d) Additional standards applicable to discharges from bilges when a vessel is operating in federally-protected waters are contained in § 139.40(c).

§ 139.12 Boilers.

(a) The requirements in paragraphs (b) and (c) of this section apply to discharges resulting from boiler blowdown.

(b) The discharge from boiler blowdown must be minimized when in port.

(c) Additional standards applicable to discharges from boilers when a vessel is operating in federally-protected waters are contained in § 139.40(d).

§ 139.13 Cathodic protection.

(a) The requirements in paragraph (b) of this section apply to discharges resulting from a vessel's cathodic corrosion control protection device, including sacrificial anodes and impressed current cathodic protection systems.

(b) Spaces between any flush-fit anode and backing must be filled to remove potential hotspots for biofouling organisms.

§ 139.14 Chain lockers.

(a) The requirements in paragraphs (b) through (e) of this section apply to accumulated precipitation and seawater that is emptied from the compartment used to store the anchor chain on a vessel.

(b) Anchors and anchor chains must be rinsed of biofouling organisms and sediment when the anchor is retrieved.

(c) The discharge of accumulated water and sediment from any chain locker is prohibited in port.

(d) For all vessels that operate beyond the waters of the contiguous zone, anchors and anchor chains must be rinsed of biofouling organisms and sediment prior to entering the waters of the contiguous zone.

(e) Additional standards applicable to a discharge from chain lockers when a vessel is operating in federally-protected waters are contained in § 139.40(e).

§ 139.15 Decks.

(a) The requirements in paragraphs (b) through (i) of this section apply to the overboard discharge of washdown and runoff, including but not limited to precipitation and sea water, from decks, well decks, and bulkhead areas.

(b) Coamings or drip pans must be used for machinery that is expected to leak or otherwise release oil on the deck; accumulated oil must be collected.

(c) Where required by an applicable international treaty or convention or the Secretary, the vessel must be fitted with and use physical barriers (*e.g.,* spill rails, scuppers and scupper plugs) to collect runoff for treatment during any washdown.

(d) Control measures must be used to minimize the introduction of on-deck debris, garbage, residue, and spill into deck washdown and runoff.

(e) Vessel decks must be kept in broom clean condition whenever the vessel is underway and prior to any deck washdown.

(f) Deck washdowns must be minimized in port.

(g) The discharge of floating solids, visible foam, halogenated phenolic compounds, dispersants, surfactants, and spills must be minimized in any deck washdown.

(h) Any soap, cleaner, or detergent used for deck washdown must be minimally-toxic, phosphate-free, and biodegradable.

(i) Additional standards applicable to discharges from decks when a vessel is operating in federally-protected waters are contained in § 139.40(f).

§ 139.16 Desalination and purification systems.

(a) The requirements in paragraph (b) of this section apply to discharges from onboard desalination and purification systems used to generate freshwater from seawater or otherwise purify water.

(b) The discharge resulting from the cleaning of desalination and purification systems with toxic or hazardous materials is prohibited.

§ 139.17 Elevator pits.

(a) The requirements in paragraph (b) of this section apply to the liquid that accumulates in, and is discharged from, the sumps of elevator wells on vessels.

(b) The discharge of untreated accumulated water and sediment from any elevator pit is prohibited.

§ 139.18 Exhaust gas emission control systems.

(a) *Applicability.* The requirements in paragraphs (b) through (e) of this section apply to discharges from the operation and cleaning of any exhaust gas cleaning system (EGCS) and exhaust gas recirculation (EGR) system.

(b) *Discharge requirements.* Unless excluded in paragraph (c) of this section, any discharge identified in paragraph (a) of this section must meet the following discharge requirements.

(1) *pH.* (i) The discharge must meet one of the following requirements:

(A) The discharge must have a pH of no less than 6.5 as measured at the vessel's overboard discharge point with the exception that during maneuvering and transit, the maximum difference of two pH units is allowed between inlet water and overboard discharge values; or

(B) The pH discharge limit is the value that will achieve a minimum pH of 6.5 at 4 meters from the overboard discharge point with the ship stationary. This overboard pH discharge limit is to be determined at the overboard discharge monitoring point and is to be recorded as the vessel's discharge limit. The overboard pH can be determined either by means of direct measurement, or by using a calculation-based methodology (computational fluid dynamics or other equally scientifically established empirical formulas).

(ii) The pH numeric discharge standard may be exceeded for up to 15 minutes in any 12-hour period.

(2) *PAHs (Polycyclic Aromatic Hydrocarbons).*

(i) The maximum continuous PAH concentration in the discharge must be no greater than 50 μg/L PAHphe (phenanthrene equivalence) above the inlet water PAH concentration. The PAH concentration in the discharge must be measured downstream of the water treatment equipment and upstream of any dilution (or other reactant dosing unit, if used).

(ii) The 50 μg/L numeric discharge standard is normalized for a discharge flow rate of 45 tons(t)/MWh where the MW refers to the Maximum Continuous Rating or 80% of the power rating of the fuel oil combustion unit. This numeric discharge standard is adjusted upward or downward for varying discharge flow

rates, pursuant to Table 1 to paragraph (b)(2)(ii) of this section.

TABLE 1 TO PARAGRAPH (b)(2)(ii)

Flow rate (t/MWh)	Numeric discharge standard (μg/L PAHphe equivalents)	Measurement technology
0–1	2,250	Ultraviolet light.
2.5	900	Ultraviolet light.
5	450	Fluorescence [a].
11.25	200	Fluorescence.
22.5	100	Fluorescence.
45	50	Fluorescence.
90	25	Fluorescence.

[a] For any Flow Rate greater than 2.5 t/MWh, Fluorescence technology must be used.

(iii) The continuous PAHphe numeric discharge standard may be exceeded by 100% for up to 15 minutes in any 12-hour period.

(3) *Turbidity/suspended particulate matter.*

(i) The washwater treatment system must be designed to minimize suspended particulate matter, including heavy metals and ash.

(ii) The maximum continuous turbidity in the discharge must be no greater than 25 FNU (formazin nephlometric units) or 25 NTU (nephlometric turbidity units) or equivalent units above the inlet water turbidity. However, to account for periods of high inlet turbidity, readings must be a rolling average over a 15-minute period to a maximum of 25 FNU with the discharge measured downstream of the water treatment equipment and upstream of dilution (or reactant dosing, if used).

(iii) The continuous turbidity numeric discharge standard may be exceeded by 20% for up to 15 minutes in any 12-hour period.

(4) *Nitrates:*

(i) The washwater treatment system must prevent the discharge of nitrates beyond that associated with a 12% removal of NO_X from the exhaust, or beyond 60 mg/L normalized for a discharge rate of 45 tons/MWh, whichever is greater.

(c) *Applicability.* The discharges of EGR bleed-off water from vessels that are underway and operating on fuel that meets the emissions requirements for sulfur starting in 2020 as specified in MARPOL Annex VI are excluded from paragraph (b) of this section.

(d) *Prohibition.* The discharge of EGR bleed-off water retained onboard in a holding tank that does not meet the discharge requirements in paragraph (b) of this section, is prohibited.

§ 139.19 Fire protection equipment.

(a) The requirements in paragraphs (b) through (d) of this section apply to the discharge from fire protection equipment. As specified in § 139.1(b)(3), these requirements do not apply to discharges from fire protection equipment when used for emergencies or when compliance with such requirements would compromise the safety of the vessel or life at sea.

(b) The discharge from fire protection equipment during testing, training, maintenance, inspection, or certification, excluding USCG-required inspection and certification, is prohibited in port and must not contain any fluorinated firefighting foam.

(c) Additional requirements applicable to discharges from fire protection equipment when a vessel is operating in federally-protected waters are contained in § 139.40(g).

§ 139.20 Gas turbines.

(a) The requirements in paragraph (b) of this section apply to discharges from the washing of gas turbine components.

(b) The discharge of untreated gas turbine washwater is prohibited unless infeasible.

§ 139.21 Graywater systems.

(a) The requirements in paragraphs (b) through (h) of this section apply to discharges of graywater except for graywater from any commercial vessel on the Great Lakes that is subject to the requirements in 40 CFR part 140 and 33 CFR part 159.

(b) The introduction of kitchen waste, food, oils, and oily residues to the graywater system must be minimized.

(c) Any soaps, cleaners, and detergents discharged in graywater must be minimally-toxic, phosphate-free, and biodegradable.

(d) The discharge of graywater is prohibited from any vessel:

(1) Within 3 NM from shore that voyages at least 3 NM from shore and has remaining available graywater storage capacity, unless the discharge meets the standards in paragraph (f) of this section; and

(2) Within 1 NM from shore that voyages at least 1 NM from shore but not beyond 3 NM from shore and has remaining available graywater storage capacity, unless the discharge meets the standards in paragraph (f) of this section.

(e) The discharge of graywater from the following vessels must meet the numeric discharge standard established in paragraph (f) of this section:

(1) Any new vessel of 400 GT ITC (400 GRT if GT ITC is not assigned) and above;

(2) Any passenger vessel with overnight accommodations for 500 or more passengers;

(3) Any passenger vessel with overnight accommodations for 100–499 passengers unless the vessel was constructed before December 19, 2008, and does not voyage beyond 1 NM from shore; and

(4) Any new ferry authorized by the USCG to carry 250 or more people.

(f) A vessel identified in paragraph (e) of this section that is discharging graywater must meet the following numeric discharge standard:

(1) *Fecal coliform.*

(i) The 30-day geometric mean must not exceed 20 cfu/100 mL (colony forming units/milliliter).

(ii) Greater than 90% of samples must not exceed 40 cfu/100 mL.

(2) *BOD5.*

(i) The 30-day average must not exceed 30 mg/L.

(ii) The 7-day average must not exceed 45 mg/L.

(3) *Suspended solids.*

(i) The 30-day average must not exceed 30 mg/L.

(ii) The 7-day average must not exceed 45 mg/L.

(4) *pH.*

(i) Must be maintained between 6.0 and 9.0.

(ii) [Reserved]

(5) Total residual chlorine.

(i) Must not exceed 10.0 μg/L.

(ii) [Reserved]

(g) The discharge of graywater from any vessel operating on the Great Lakes that is not a commercial vessel must not exceed 200 fecal coliform forming units per 100 milliliters and contain no more than 150 milligrams per liter of suspended solids.

(h) Additional standards applicable to discharges from graywater systems when a vessel is operating in federally-protected waters are contained in § 139.40(h).

§ 139.22 Hulls and associated niche areas.

(a) *Applicability.* The requirements in paragraphs (b) and (c) of this section apply to the discharge of coatings, biofouling organisms, and other materials from vessel hull surfaces and niche areas.

(b) *Coatings.* (1) Coatings applied to the vessel must be specific to the operational profile of the vessel and the equipment to which it is applied, including, for biocidal coatings, having appropriate effective biocide release rates and components that are biodegradable once separated from the vessel surface.

(2) Coatings must be applied, maintained, and reapplied consistent with manufacturer specifications, including the thickness, the method of application, and the lifespan of the coating.

(3) Coatings on vessel hulls and niches must not contain tributyltin (TBT) or any other organotin compound used as a biocide.

(i) Any vessel hull previously covered with a coating containing TBT (whether or not used as a biocide) or any other organotin compound (if used as a biocide) must:

(A) Maintain an effective overcoat on the vessel hull so that no TBT or other organotin leaches from the vessel hull; or

(B) Remove any TBT or other organotin compound from the vessel hull.

(4) When an organotin compound other than TBT is used as a catalyst in the coating (*e.g.,* dibutyltin), the coating must:

(i) Contain less than 2,500 mg total tin per kilogram of dry paint; and

(ii) Not be designed to slough or otherwise peel from the vessel hull, noting that incidental amounts of coating discharged by abrasion during cleaning or after contact with other hard surfaces (*e.g.,* moorings) are acceptable.

(5) Coatings that contain cybutryne must not be applied on vessel hulls and niches.

(i) Any vessel that has previously applied a coating that contains cybutryne to the vessel hull must:

(A) Apply and maintain an effective overcoat of the vessel hull so that no cybutryne leaches from the vessel hull, noting that incidental amounts of coating discharged by abrasion during cleaning or after contact with other hard surfaces (*e.g.,* moorings) are acceptable; or

(B) Remove any cybutryne coating from the vessel hull.

(6) Alternatives to copper-based coatings must be considered for vessels spending 30 or more days per year in a copper-impaired waterbody or using these waters as their home port.

(c) *Cleaning.* (1) Hulls and niche areas must be cleaned regularly to minimize biofouling.

(2) Cleaning techniques must minimize damage to the coating.

(3) Cleaning must not result in a plume or cloud of paint.

(4) In-water cleaning of biofouling that exceeds a fouling rating of FR–20 is prohibited unless one or more of the following conditions are met:

(i) The biofouling is local in origin and cleaning does not result in a plume or cloud of paint; or

(ii) An in-water cleaning and capture (IWCC) system is designed and operated to:

(A) Capture coatings and biofouling organisms;

(B) Filter biofouling organisms from the effluent; and

(C) Minimize the release of biocides.

(5) The discharge of any wastes filtered or otherwise removed from any IWCC system is prohibited.

(6) In-water cleaning of any copper-based hull coatings is prohibited in a copper-impaired waterbody within the first 365 days after application, unless an IWCC system consistent with paragraph (c)(2)(ii) of this section is used.

(7) In-water cleaning must not be conducted on any section of a biocidal antifouling coating that shows excessive cleaning actions (*e.g.,* brush marks) or blistering due to the internal failure of the paint system.

(8) Any soap, cleaner, or detergent used on vessel surfaces, such as a scum line of the hull, must be minimally-toxic, phosphate-free, and biodegradable.

(9) Additional standards applicable to discharges from hulls and associated niche areas when a vessel is operating in federally-protected waters are contained in § 139.40(i).

§ 139.23 Inert gas systems.

(a) The requirements in paragraph (b) of this section apply to the discharge of washwater from an inert gas system and deck seal water when used as an integral part of that system.

(b) The discharge from inert gas systems must meet the general discharge requirements in subpart B of this part.

§ 139.24 Motor gasoline and compensating systems.

(a) The requirements in paragraphs (b) and (c) of this section apply to the discharge of motor gasoline and compensating ambient water added to keep gasoline tanks full to prevent potentially explosive gasoline vapors from forming.

(b) The discharge of motor gasoline and compensating discharges must meet all general discharge requirements in subpart B of this part.

(c) Additional standards applicable to discharges from motor gasoline and compensating systems when a vessel is operating in federally-protected waters are contained in § 139.40(j).

§ 139.25 Non-oily machinery.

(a) The requirements in paragraph (b) of this section apply to discharges from machinery that contains no oil, including discharges from the operation of desalination systems, water chillers, valve packings, water piping, low- and high-pressure air compressors, propulsion engine jacket coolers, fire pumps, and seawater and potable water pumps.

(b) The discharge of untreated non-oily machinery wastewater and packing gland or stuffing box effluent containing toxic or bioaccumulative additives or the discharge of oil in such quantities as may be harmful is prohibited.

§ 139.26 Pools and spas.

(a) The requirements in paragraphs (b) and (c) of this section apply to discharges from pools and spas.

(b) Except for unintentional or inadvertent releases from overflows across the decks and into overboard drains caused by, but not limited to, weather, vessel traffic, marine wildlife avoidance or navigational maneuvering, discharge of pool and spa water must:

(1) Occur only while the vessel is underway, unless determined to be infeasible, and;

(2) Meet the following numeric discharge standard:

(i) For chlorine disinfection: Total residual chlorine less than 100 μg/L; and

(ii) For bromine disinfection: Total residual oxidant less than 25 μg/L.

(c) Additional standards applicable to discharges from pools and spas when a vessel is operating in federally-protected waters are contained in § 139.40(k).

§ 139.27 Refrigeration and air conditioning.

(a) The requirements in paragraph (b) of this section apply to discharges of condensation from refrigeration, air conditioning, and similar chilling equipment.

(b) The direct overboard discharge of any condensate that contacts toxic or hazardous materials is prohibited.

§ 139.28 Seawater piping.

(a) The requirements in paragraphs (b) and (c) of this section apply to discharges from seawater piping systems that provide water for other vessel uses (*e.g.,* engines, hydraulic systems, and refrigeration), including while a vessel is in port or in layup.

(b) Seawater piping systems, including sea chests, grates, and similar appurtenances, that accumulate biofouling that exceeds a fouling rating of FR–20 must be fitted with a Marine Growth Prevention System (MGPS).

(1) An MGPS must be selected to address:

(i) The level, frequency, and type of biofouling; and

(ii) The design, location, and area in which the system will be used.

(2) An MGPS must include one, or some combination of the following:

(i) Chemical injection;

(ii) Electrolysis, ultrasound, ultraviolet radiation, or electrochlorination;

(iii) Application of an antifouling coating; or

(iv) Use of cupro-nickel piping.

(3) Upon identification of biofouling that exceeds a fouling rating of FR–20 in a seawater piping system, reactive measures to manage the macrofouling must be used. Discharges resulting from reactive measures to remove macrofouling are prohibited in port.

(c) Additional standards applicable to discharges from seawater piping when a vessel is operating in federally-protected waters are contained in § 139.40(l).

§ 139.29 Sonar domes.

(a) The requirements in paragraphs (b) and (c) of this section apply to discharges from sonar domes.

(b) The discharge of water during maintenance or repair from inside the sonar dome is prohibited.

(c) Use of bioaccumulative biocides on the exterior of any sonar dome is prohibited when non-bioaccumulative alternatives are available.

Subpart D—Special Area Requirements

§ 139.40 Federally-protected waters.

(a) *Applicability.* The requirements in paragraphs (b) through (l) of this section are in addition to applicable standards in subparts B and C of this part and apply when a vessel is operating in federally-protected waters.

(b) *Ballast tanks.* The discharge or uptake of ballast water in federally-protected waters must be avoided except for those vessels operating within the boundaries of any national marine sanctuary that preserves shipwrecks or maritime heritage in the Great Lakes, unless the designation documents for such sanctuary do not allow taking up or discharging ballast water in such sanctuary, pursuant to the Howard Coble Coast Guard and Maritime Transportation Act of 2014, as amended by the Coast Guard Reauthorization Act of 2015, Public Law 114–120, title VI, sec 602.

(c) *Bilges.* For any vessel of 400 GT ITC (400 GRT if GT ITC is not assigned) and above, the discharge of bilgewater into federally-protected waters is prohibited.

(d) *Boilers.* The discharge of boiler blowdown into federally-protected waters is prohibited.

(e) *Chain lockers.* The discharge of accumulated water and sediment from any chain locker into federally-protected waters is prohibited.

(f) *Decks.* The discharge of deck washdown into federally-protected waters is prohibited.

(g) *Fire protection equipment.* The discharge from fire protection equipment during testing, training, maintenance, inspection, or certification into federally-protected water is prohibited. The discharge of non-fluorinated firefighting foam into federally-protected waters is prohibited except by any vessel owned or under contract with the United States, state, or local government to do business exclusively in any federally-protected waters.

(h) *Graywater system.* The discharge of graywater into federally-protected waters from any vessel with remaining available graywater storage capacity is prohibited.

(i) *Hulls and associated niche areas.* The discharge from in-water cleaning of vessel hulls and niche areas into federally-protected waters is prohibited.

(j) *Motor gasoline and compensating systems.* The discharge of motor gasoline and compensating discharges into federally-protected waters is prohibited.

(k) *Pools and spas.* The discharge of pool or spa water into federally-protected waters is prohibited.

(l) *Seawater piping systems.* The discharge of chemical dosing, as described in § 139.28, into federally-protected waters is prohibited.

Subpart E—Procedures for States To Request Changes to Standards, Regulations, or Policy Promulgated by the Administrator

§ 139.50 Petition by a Governor for the Administrator to establish an emergency order or review a standard, regulation, or policy.

(a) The Governor of a State (or a designee) may submit a petition to the Administrator:

(1) To issue an emergency order under CWA section 312(p)(4)(e); or

(2) To review any standard of performance, regulation, or policy promulgated by the Administrator under CWA section 312(p)(4) or (6), if there exists new information that could reasonably result in a change to:

(i) The standard of performance, regulation, or policy; or

(ii) A determination on which the standard of performance, regulation, or policy was based.

(b) A petition under paragraph (a) of this section shall be signed by the Governor (or a designee) and must include:

(1) The purpose of the petition (request for emergency order or a review of a standard, regulation, or policy);

(2) Any applicable scientific or technical information that forms the basis of the petition; and

(3) The direct and indirect benefits if the requested petition were to be granted by the Administrator.

(c) The Administrator shall grant or deny:

(1) A petition under paragraph (a)(1) of this section by not later than the date that is 180 days after the date on which the petition is submitted; and

(2) A petition under paragraph (a)(2) of this section by not later than the date that is one year after the date on which the petition is submitted.

(d) If the Administrator determines to grant a petition:

(1) In the case of a petition under paragraph (a)(1) of this section, the Administrator shall immediately issue the relevant emergency order under CWA section 312(p)(4)(E); or

(2) In the case of a petition under paragraph (a)(2) of this section, the Administrator shall submit a Notice of Proposed Rulemaking to the **Federal Register** to revise the relevant standard, requirement, regulation, or policy under

CWA section 312(p)(4) or (6), as applicable.

(e) If the Administrator determines to deny a petition, the Administrator shall submit a notice to the **Federal Register**, that includes a detailed explanation of the scientific, technical, or operational factors that form the basis of the determination.

§ 139.51 Petition by a Governor for the Administrator to establish enhanced Great Lakes system requirements.

(a) The Governors endorsing a proposed standard or requirement under CWA section 312(p)(10)(ii)(III)(bb) may jointly submit to the Administrator for approval each proposed standard of performance or other requirement developed and endorsed pursuant to CWA section 312(p)(10)(ii) with respect to any discharge that is subject to regulation under this part and occurs within the Great Lakes System.

(b) A petition under paragraph (a) of this section must include:

(1) An explanation regarding why the applicable standard of performance or other requirement is at least as stringent as a comparable standard of performance or other requirement under this part;

(2) Information indicating that the standard of performance or other requirement is in accordance with maritime safety; and

(3) Information indicating that the standard of performance or other requirement is in accordance with applicable maritime and navigation laws and regulations.

(c) On receipt of a proposed standard of performance or other requirement under paragraph (b) of this section, the Administrator shall submit, after consultation with USCG, a document to the **Federal Register** that, at minimum:

(1) States that the proposed standard or requirement is publicly available; and

(2) Provides an opportunity for public comment regarding the proposed standard or requirement.

(d) The Administrator shall commence a review of each proposed standard of performance or other requirement covered by the notice to determine whether that standard or requirement is at least as stringent as comparable standards and requirements under this part.

(e) In carrying out paragraph (d) of this section, the Administrator:

(1) Shall consult with the Secretary,

(2) Shall consult with the Governor of each Great Lakes State and representatives from the Federal and provincial governments of Canada;

(3) Shall take into consideration any relevant data or public comments received under paragraph (c)(2) of this section; and

(4) Shall not take into consideration any preliminary assessment by the Great Lakes Commission or any dissenting opinion by a Governor of a Great Lakes State, except to the extent that such an assessment or opinion is relevant to the criteria for the applicable determination under paragraph (d) of this section.

(f) Upon review and determination, the Administrator, in concurrence with the Secretary, shall approve each proposed standard or other requirement, unless the Administrator determines that the proposed standard or other requirement is not at least as stringent as comparable standards and requirements under this part.

(g) If the Administrator approves a proposed standard or other requirement, the Administrator shall submit notification of the determination to the Governor of each Great Lakes State and to the **Federal Register**.

(h) If the Administrator disapproves a proposed standard of performance or other requirement, the Administrator shall submit a notice that must include:

(1) A description of the reasons why the standard or requirement is, as applicable, less stringent than a comparable standard or requirement under this part, and

(2) Any recommendations regarding changes the Governors of the Great Lakes States could make to conform the disapproved portion of the standard or requirement to the requirements of paragraph (b) of this section.

(i) Disapproval of a proposed standard or requirement by the Administrator under paragraph (h) of this section shall be considered to be a final agency action subject to judicial review under section 509.

(j) On approval by the Administrator of a proposed standard of performance or other requirement, the Administrator shall establish, by regulation, the proposed standard or requirement within the Great Lakes System in lieu of any comparable standard or other requirement promulgated under CWA section 312(p)(4).

§ 139.52 Application by a State for the Administrator to establish a State No-Discharge Zone.

(a) If any state determines that the protection and enhancement of the quality of some or all of the waters within the state require greater environmental protection, the Governor of a State (or a designee) may submit a petition to the Administrator to establish a regulation prohibiting one or more discharges, whether treated or not treated, into such waters subject to the application.

(b) A prohibition by the Administrator under paragraph (a) of this section shall not apply until the Administrator, in concurrence with the Secretary, reviews the state application and makes the applicable determinations described in paragraph (d) of this section and publishes a regulation establishing the prohibition.

(c) An application submitted by the state under paragraph (a) of this section shall be signed by the Governor (or a designee) and must include:

(1) A certification that a prohibition of the discharge(s) would protect and enhance the quality of the specific waters within the state to a greater extent than the applicable Federal standard provides;

(2) A detailed analysis of the direct and indirect benefits of the requested prohibition for each individual discharge for which the state is seeking a prohibition;

(3) A table identifying the types and number of vessels operating in the waterbody and a table identifying the types and number of vessels that would be subject to the prohibition;

(4) A table identifying the location, operating schedule, draught requirements, pumpout capacity, pumpout flow rate, and fee structure of each facility capable of servicing the vessels that would be subject to the prohibition and available to receive the prohibited discharge;

(5) A map indicating the location of each facility identified in paragraph (5) within the proposed waters;

(6) A table identifying the location and geographic area of each proposed no-discharge zone; and

(7) A detailed analysis of the impacts to vessels subject to the prohibition, including a discussion of how these vessels may feasibly collect and store the discharge, the extent to which retrofitting may be required, costs that are incurred as a result of the discharge prohibition, and any safety implications.

(d) On application of a State, the Administrator, in concurrence with the Secretary, shall, by regulation, prohibit the discharge from a vessel of one or more discharges subject to regulation under this part, whether treated or not treated, into the waters covered by the application if the Administrator determines that—

(1) The prohibition of the discharge would protect and enhance the quality of the specified waters within the state;

(2) Adequate facilities for the safe and sanitary removal and treatment of the prohibited discharge are reasonably

available, taking costs into consideration, for the water and all vessels to which the prohibition would apply. A determination of adequacy shall consider, at a minimum, water depth, dock size, pumpout facility capacity and flow rate, availability of year-round operations, proximity to navigation routes, and the ratio of pumpout facilities to the population and discharge capacity of vessels operating in those waters;

(3) The discharge can be safely collected and stored until a vessel reaches an appropriate facility or location for discharge;

(4) In the case of an application for the prohibition of the discharge of ballast water in port (or in any other location where cargo, passengers, or fuel are loaded and unloaded):

(i) The considerations for adequate facilities described in paragraph (d)(2) of this section apply; and

(ii) The prohibition will not unreasonably interfere with the safe loading and unloading of cargo, passengers, or fuel.

(e) The Administrator shall submit to the Secretary a request for written concurrence on a determination made to establish a prohibition.

(1) A failure by the Secretary to concur with the Administrator 60 days after the date on which the Administrator submits a request for concurrence shall not prevent the Administrator from prohibiting the discharge or discharges, subject to the condition that the Administrator shall include in the administrative record of the promulgation:

(i) Documentation of the request for concurrence; and

(ii) The response of the Administrator to any written objections received from the Secretary relating to the prohibition during the 60-day period beginning on the date of the request for concurrence.

(f) Upon a determination by the Administrator that an application meets the criteria in paragraph (c) of this section, the Administrator shall approve or disapprove an application submitted by a state.

(g) If the Administrator approves the application, the Administrator shall submit a notice of proposed rulemaking to the **Federal Register**.

(h) A prohibition by the Administrator under paragraph (a) of this section shall not apply until the Administrator publishes a final rule establishing the prohibition.

Appendix A to Part 139—Federally-Protected Waters [1]

A.1 National Marine Sanctuaries

American Samoa National Marine Sanctuary
Channel Islands National Marine Sanctuary
Cordell Bank National Marine Sanctuary
Florida Keys National Marine Sanctuary
Flower Garden Banks National Marine Sanctuary
Gray's Reef National Marine Sanctuary
Greater Farallones National Marine Sanctuary
Hawaii Humpback Whale National Marine Sanctuary
Mallows Bay-Potomac River National Marine Sanctuary
Monitor National Marine Sanctuary
Monterey Bay National Marine Sanctuary
Olympic Coast National Marine Sanctuary
Stellwagen Bank National Marine Sanctuary
Thunder Bay National Marine Sanctuary

A.2 Marine National Monuments

Mariana Trench Marine National Monument
Northeast Canyons and Seamounts Marine National Monument
Pacific Remote Islands Marine National Monument
Papahānaumokuākea Marine National Monument
Rose Atoll Marine National Monument

A.3 National Parks (National Reserves and Monuments)

Alabama

Birmingham Civil Rights National Monument
Horseshoe Bend National Military Park
Freedom Riders National Monument
Little River Canyon National Preserve
Muscle Shoals National Heritage Area
Russell Cave National Monument
Trail of Tears National Historic Trail
Tuskegee Airmen National Historic Site

Alaska

Aleutian World War II National Historic Area
Aniakchak National Monument & Preserve
Bering Land Bridge National Preserve
Cape Krusenstern National Monument
Denali National Park & Preserve
Gates of the Artic National Park & Preserve
Glacier Bay National Park & Preserve
Katmai National Park & Preserve
Kenai Fjords National Park
Klondike Gold Rush National Historical Park
Kobuk Valley National Park
Lake Clark National Park & Preserve
Noatak National Preserve
Sitka National Historical Park
Wrangell—St Elias National Park & Preserve
Yukon—Charley Rivers National Preserve

American Samoa

National Park of America Samoa

Arizona

Canyon de Chelly National Monument
Casa Grande Ruins National Monument
Chiricahua National Monument
Glen Canyon National Recreation Area
Grand Canyon National Park
Hohokam Pima National Monument
Lake Mead National Recreation Area
Montezuma Castle National Monument
Navajo National Monument
Organ Pipe Cactus National Monument
Parashant National Monument
Petrified Forest National Park
Pipe Spring National Monument
Saguaro National Park
Sunset Crater Volcano National Monument
Tonto National Monument
Tumacacori National Historical Park
Tuzigoot National Monument
Walnut Canyon National Monument
Wupatki National Monument
Yuma Crossing National Heritage Area

Arkansas

Hot Springs National Park
Pea Ridge National Military Park
Trail of Tears National Historic Trail

California

Alcatraz Island
Cabrillo National Monument
Castle Mountains National Monument
Cesar E. Chavez National Monument
Channel Islands National Park
Death Valley National Park
Devils Postpile National Monument
Fort Point National Historic Site
Golden Gate National Recreation Area
John Muir National Historic Site
Joshua Tree National Park
Lassen Volcanic National Park
Lava Beds National Monument
Mojave National Preserve
Muir Woods National Monument
Pinnacles National Park
Point Reyes National Seashore
Redwood National Park
Rosie the Riveter WWII Home Front National Historical Park
San Francisco Maritime National Historical Park
Santa Monica Mountains National Recreation Area
Sequoia & Kings Canyon National Parks
Tule Lake National Monument
Whiskeytown National Recreation Area
Yosemite National Park

Colorado

Bent's Old Fort National Historical Site
Black Canyon of The Gunnison National Park
Colorado National Monument
Curecanti National Recreation Area
Dinosaur National Monument
Florissant Fossil Beds National Monument
Great Sand Dunes National Park & Preserve
Hovenweep National Monument
Mesa Verde National Park
Rocky Mountain National Park
Santa Fe National Historic Trail
Yucca House National Monument

Connecticut

Quinebaug & Shetucket Rivers Valley National Heritage Corridor

Delaware

Captain John Smith Chesapeake National Historic Trail
First State National Historical Park

District of Columbia

Anacostia Park
Capitol Hill Parks
Captain John Smith Chesapeake National Historic Trail
Chesapeake & Ohio Canal National Historical Park
Chesapeake Bay Gateways Network
Kenilworth Park & Aquatic Gardens
Meridian Hill Park
National Capital Parks-East

National Mall & Memorial Parks
Potomac Heritage National Scenic Trail

Florida

Big Cypress National Preserve
Biscayne National Park
Canaveral National Seashore
Castillo De San Marcos National Monument
De Soto National Memorial
Dry Tortugas National Park
Everglades National Park
Fort Caroline National Memorial
Fort Matanzas National Monument
Gulf Islands National Seashore
Timucuan Ecological and Historical Preserve

Georgia

Augusta Canal National Heritage Area
Chattahoochee River National Recreation Area
Chickamauga & Chattanooga National Military Park
Cumberland Island National Seashore
Fort Frederica National Monument
Fort Pulaski National Monument
Jimmy Carter National Historic Site
Martin Luther King, Jr. National Historical Park
Ocmulgee National Historical Park

Guam

War in The Pacific National Historical Park

Hawaii

Haleakala National Park
Hawai'i Volcanoes National Park
Kalaupapa National Historical Park
Kaloko-Honokohau National Historical Park
Pu'uhonua O Honaunau National Historical Park
Puukohola Heiau National Historical Site

Idaho

City of Rocks National Reserve
Craters Of The Moon National Monument and Preserve
Hagerman Fossil Beds National Monument
Lewis & Clark National Historic Trail
Minidoka Internment National Monument
Nez Perce National Historical Park
Yellowstone National Park

Illinois

Lewis & Clark National Historic Trail
Pullman National Monument
Trail Of Tears National Historic Trail

Indiana

George Rogers Clark National Historical Park
Indiana Dunes National Park
Lincoln Boyhood National Memorial

Iowa

Effigy Mounds National Monument
Lewis & Clark National Historic Trail

Kansas

Lewis & Clark National Historic Trail
Tallgrass Prairie National Preserve

Kentucky

Abraham Lincoln Birthplace National Historical Park
Big South Fork National River and Recreation Area
Camp Nelson National Monument
Cumberland Gap National Historical Park
Mammoth Cave National Park
Trail Of Tears National Historic Trail

Louisiana

Cane River National Heritage Area
Cane River Creole National Historical Park
Jean Lafitte National Historical Park and Preserve
New Orleans Jazz National Historical Park
Poverty Point National Monument

Maine

Acadia National Park
Katahdin Woods and Waters National Monument
Roosevelt Campobello International Park
Saint Croix Island International Historic Site

Maryland

Antietam National Battlefield
Assateague Island National Seashore
Captain John Smith Chesapeake National Historic Trail
Catoctin Mountain Park
Chesapeake & Ohio Canal National Historical Park
Chesapeake Bay Gateways Network
Clara Barton National Historic Site
Fort Foote Park
Fort McHenry National Monument and Historic Shrine
Fort Washington Park
Glen Echo Park
Greenbelt Park
Harmony Hall
Harpers Ferry National Historical Park
Harriet Tubman Underground Railroad National Historical Park
Monocacy National Battlefield
Oxon Cove Park & Oxon Hill Farm
Piscataway Park
Potomac Heritage National Scenic Trail
Thomas Stone National Historic Site

Massachusetts

Adams National Historical Park
Blackstone River Valley National Heritage Corridor
Boston National Historical Park
Boston African American National Historic Site
Boston Harbor Islands National Recreation Area
Cape Cod National Seashore
Essex National Heritage Area
Lowell National Historical Park
Minute Man National Historic Site
New Bedford Whaling National Historical Park
Salem Maritime National Historic Site
Saugus Iron Works National Historic Site
Springfield Armory National Historic Site

Michigan

Isle Royale National Park
Keweenaw National Historical Park
Pictured Rocks National Lakeshore
Sleeping Bear Dunes National Lakeshore

Minnesota

Grand Portage National Monument
Mississippi National River and Recreation Area
Pipestone National Monument
Saint Croix National Scenic Riverway
Voyageurs National Park

Mississippi

Gulf Islands National Seashore
Natchez National Historical Park
Natchez Trace National Scenic Trail

Missouri

Gateway Arch National Park
George Washington Carver National Monument
Jefferson National Expansion Memorial
Lewis & Clark National Historic Trail
Ozark National Scenic Riverways
Sainte Genevieve National Historical Park
Trail Of Tears National Historic Trail
Wilson's Creek National Battlefield

Montana

Bighorn Canyon National Recreation Area
Glacier National Park
Lewis & Clark National Historic Trail
Little Bighorn Battlefield National Monument
Nez Perce National Historical Park
Yellowstone National Park

Nebraska

Agate Fossil Beds National Monument
Homestead National Monument of America
Lewis & Clark National Historic Trail
Niobrara National Scenic River
Scotts Bluff National Monument

Nevada

Death Valley National Park
Great Basin National Park
Lake Mead National Recreation Area
Tule Springs Fossil Beds

New Hampshire

Saint-Gaudens National Historical Park

New Jersey

Appalachian National Scenic Trail
Delaware National Scenic River
Delaware Water Gap National Recreation Area
Ellis Island National Monument
Gateway National Recreation Area
Great Egg Harbor River
Lower Delaware National Wild and Scenic River
Morristown National Historical Park
New Jersey Pinelands National Reserve
Paterson Great Falls National Historical Park
Thomas Edison National Historical Park

New Mexico

Aztec Ruins National Monument
Bandelier National Monument
Capulin Volcano National Monument
Carlsbad Caverns National Park
Chaco Culture National Historical Park
El Malpais National Monument
El Morro National Monument
Fort Union National Monument
Gila Cliff Dwellings National Monument
Manhattan Project National Historical Park
Pecos National Historical Park
Petroglyph National Monument
Salinas Pueblo Missions National Monument
Valles Caldera National Preserve
White Sands National Park

New York

African Burial Ground National Monument
Castle Clinton National Monument
Chesapeake Bay Gateways Network
Ellis Island National Monument

Erie Canalway National Heritage Corridor
Fire Island National Seashore
Fort Stanwix National Monument
Gateway National Recreation Area
Governors Island National Monument
Harriet Tubman National Historical Park
Hudson River Valley National Heritage Area
National Parks of New York Harbor
Saratoga National Historical Park
Statue Of Liberty National Monument
Stonewall National Monument
Upper Delaware Scenic and Recreational River
Women's Rights National Historical Park

North Carolina

Blue Ridge National Heritage Area
Cape Hatteras National Seashore
Cape Lookout National Seashore
Great Smoky Mountains National Park
Wright Brothers National Monument

North Dakota

Fort Union Trading Post National Historic Site
Lewis & Clark National Historic Trail
Theodore Roosevelt National Park

Northern Mariana Islands

American Memorial Park

Ohio

Charles Young Buffalo Soldiers National Monument
Cuyahoga Valley National Park
Dayton Aviation Heritage National Historical Park
Hopewell Culture National Historical Park
Perry's Victory & International Peace Memorial

Oklahoma

Chickasaw National Recreation Area
Trail Of Tears National Historic Trail

Oregon

Crater Lake National Park
Fort Vancouver National Historic Site
John Day Fossil Beds National Monument
Lewis & Clark National Historic Trail
Lewis and Clark National Historical Park
Nez Perce National Historical Park
Oregon Caves National Monument

Pennsylvania

Chesapeake Bay Gateways Network
Delaware National Scenic River
Delaware & Lehigh National Heritage Corridor
Delaware Water Gap National Recreation Area
First State National Historical Park
Independence National Historical Park
Johnstown Flood National Memorial
Lackawanna Heritage Valley
Lower Delaware National Wild and Scenic River
Potomac Heritage National Scenic Trail
Rivers Of Steel National Heritage Area
Schuylkill River Valley National Heritage Area
Upper Delaware Scenic and Recreational River
Valley Forge National Historical Park

Rhode Island

Blackstone River Valley National Historical Park

South Carolina

Congaree National Park
Fort Moultrie National Monument
Fort Sumter National Historical Park

South Dakota

Badlands National Park
Jewel Cave National Monument
Lewis & Clark National Historic Trail
Missouri Recreational River
Wind Cave National Park

Tennessee

Big South Fork National River and Recreation Area
Cumberland Gap National Historical Park
Great Smoky Mountains National Park
Manhattan Project National Historical Park
Obed Wild and Scenic River

Texas

Alibates Flint Quarries National Monument
Amistad National Recreation Area
Big Bend National Park
Big Thicket National Preserve
Chamizal National Memorial
Guadalupe Mountains National Park
Lake Meredith National Recreation Area
Lyndon B Johnson National Historical Park
Padre Island National Seashore
Rio Grande Wild and Scenic River
San Antonio Missions National Historical Park
Waco Mammoth National Monument

Utah

Arches National Park
Bryce Canyon National Park
Canyonlands National Park
Capitol Reef National Park
Cedar Breaks National Monument
Dinosaur National Monument
Glen Canyon National Recreation Area
Golden Spike National Historical Park
Hovenweep National Monument
Natural Bridges National Monument
Rainbow Bridge National Monument
Timpanogos Cave National Monument
Zion National Park

Vermont

Marsh-Billings-Rockefeller National Historical Park

Virgin Islands

Buck Island Reef National Monument
Salt River Bay National Historical Park and Ecological Reserve
Virgin Islands National Park
Virgin Islands Coral Reef National Monument

Virginia

Appomattox Court House National Historical Park
Assateague Island National Seashore
Booker T Washington National Monument
Cape Henry Memorial
Captain John Smith Chesapeake National Historic Trail
Cedar Creek & Belle Grove National Historical Park
Chesapeake Bay Gateways Network
Colonial National Historical Park
Cumberland Gap National Historical Park
Fort Monroe National Monument
Fredericksburg & Spotsylvania National Military Park
George Washington Birthplace National Monument
Great Falls Park
Harpers Ferry National Historical Park
Historic Jamestowne
Lyndon Baines Johnson Memorial Grove on the Potomac
Potomac Heritage National Scenic Trail
Prince William Forest Park
Shenandoah National Park
Theodore Roosevelt Island Park
Yorktown Battlefield

Washington

Ebey's Landing National Historical Reserve
Fort Vancouver National Historic Site
Lake Chelan National Recreation Area
Lake Roosevelt National Recreation Area
Lewis & Clark National Historic Park
Manhattan Project National Historical Park
Mount Rainier National Park
Nez Perce National Historical Park
North Cascades National Park
Olympic National Park
Ross Lake National Recreation Area
San Juan Island National Historical Park

West Virginia

Bluestone National Scenic River
Chesapeake Bay Gateways Network
Gauley River National Recreation Area
Harpers Ferry National Historical Park
New River Gorge National River

Wisconsin

Apostle Islands National Lakeshore
Saint Croix National Scenic Riverway

Wyoming

Bighorn Canyon National Recreation Area
Devils Tower National Monument
Fossil Butte National Monument
Grand Teton National Park
Yellowstone National Park

A.4 National Wildlife Refuges

Refuges that have boundaries in multiple states are listed only in the state where the main visitor entrance is located. Maps of each national wildlife refuge are available at *https://www.fws.gov/refuges.*

Alabama

Bon Secour National Wildlife Refuge
Cahaba River National Wildlife Refuge
Choctaw National Wildlife Refuge
Eufaula National Wildlife Refuge
Fern Cave National Wildlife Refuge
Key Cave National Wildlife Refuge
Mountain Longleaf National Wildlife Refuge
Sauta Cave National Wildlife Refuge
Watercress Darter National Wildlife Refuge
Wheeler National Wildlife Refuge

Alaska

Alaska Maritime National Wildlife Refuge
Alaska Peninsula National Wildlife Refuge
Arctic National Wildlife Refuge
Becharof National Wildlife Refuge
Innoko National Wildlife Refuge
Izembek National Wildlife Refuge
Kanuti National Wildlife Refuge
Kenai National Wildlife Refuge
Kodiak National Wildlife Refuge
Koyukuk National Wildlife Refuge
Nowitna National Wildlife Refuge
Selawik National Wildlife Refuge

Tetlin National Wildlife Refuge
Togiak National Wildlife Refuge
Yukon Delta Flats National Wildlife Refuge
Yukon Delta National Wildlife Refuge

Arizona

Bill Williams River National Wildlife Refuge
Buenos Aires National Wildlife Refuge
Cabeza Prieta National Wildlife Refuge
Cibola National Wildlife Refuge
Havasu National Wildlife Refuge
Imperial National Wildlife Refuge
Kofa National Wildlife Refuge
Leslie Canyon National Wildlife Refuge
San Bernardino National Wildlife Refuge

Arkansas

Bald Knob National Wildlife Refuge
Big Lake National Wildlife Refuge
Cache River National Wildlife Refuge
Felsenthal National Wildlife Refuge
Holla Bend National Wildlife Refuge
Logan Cave National Wildlife Refuge
Overflow National Wildlife Refuge
Pond Creek National Wildlife Refuge
Wapanocca National Wildlife Refuge
White River National Wildlife Refuge

California

Antioch Dunes National Wildlife Refuge
Bitter Creek National Wildlife Refuge
Blue Ridge National Wildlife Refuge
Butte Sink Wildlife Management Area
Castle Rock National Wildlife Refuge
Clear Lake National Wildlife Refuge
Coachella Valley National Wildlife Refuge
Colusa National Wildlife Refuge
Delevan National Wildlife Refuge
Don Edwards San Francisco Bay National Wildlife Refuge
Ellicott Slough National Wildlife Refuge
Farallon Islands National Wildlife Refuge
Grasslands Wildlife Management Area
Grulla National Wildlife Refuge
Hopper Mountain National Wildlife Refuge
Humboldt Bay National Wildlife Refuge
Kern National Wildlife Refuge
Kesterton National Wildlife Refuge
Lower Klamath National Wildlife Refuge
Marin Islands National Wildlife Refuge
Merced National Wildlife Refuge
Modoc National Wildlife Refuge
North Central Valley Wildlife Management Area
Pixley National Wildlife Refuge
Sacramento National Wildlife Refuge
Sacramento River National Wildlife Refuge
Salinas River National Wildlife Refuge
San Diego Bay National Wildlife Refuge
San Diego National Wildlife Refuge
San Joaquin River National Wildlife Refuge
San Luis National Wildlife Refuge
San Pablo Bay National Wildlife Refuge
Seal Beach National Wildlife Refuge
Sonny Bono Salton Sea National Wildlife Refuge
Stone Lakes National Wildlife Refuge
Sutter National Wildlife Refuge
Tijuana Slough National Wildlife Refuge
Tule Lake National Wildlife Refuge
Willow Creek-Lurline Wildlife Management Area
Windom Wetland Management District

Colorado

Alamosa National Wildlife Refuge
Arapaho National Wildlife Refuge
Baca National Wildlife Refuge
Browns Park National Wildlife Refuge
Monte Vista National Wildlife Refuge
Rocky Flats National Wildlife Refuge
Rocky Mountain Arsenal National Wildlife Refuge
Two Ponds National Wildlife Refuge

Connecticut

Stewart B. McKinney National Wildlife Refuge

Delaware

Bombay Hook National Wildlife Refuge
Prime Hook National Wildlife Refuge

Florida

Archie Carr National Wildlife Refuge
Arthur R. Marshall Loxahatchee National Wildlife Refuge
Caloosahatchee National Wildlife Refuge
Cedar Keys National Wildlife Refuge
Chassahowitzka National Wildlife Refuge
Crocodile Lake National Wildlife Refuge
Crystal River National Wildlife Refuge
Egmont Key National Wildlife Refuge
Everglades Headwaters NWR and Conservation Area
Florida Panther National Wildlife Refuge
Great White Heron National Wildlife Refuge
Hobe Sound National Wildlife Refuge
Island Bay National Wildlife Refuge
J.N. ''Ding'' Darling National Wildlife Refuge
Key West National Wildlife Refuge
Lake Wales Ridge National Wildlife Refuge
Lake Woodruff National Wildlife Refuge
Lower Suwannee National Wildlife Refuge
Matlacha Pass National Wildlife Refuge
Merritt Island National Wildlife Refuge
National Key Deer Refuge
Passage Key National Wildlife Refuge
Pelican Island National Wildlife Refuge
Pine Island National Wildlife Refuge
Pinellas National Wildlife Refuge
St. Johns National Wildlife Refuge
St. Marks National Wildlife Refuge
St. Vincent National Wildlife Refuge
Ten Thousand Islands National Wildlife Refuge

Georgia

Banks Lake National Wildlife Refuge
Blackbeard Island National Wildlife Refuge
Bond Swamp National Wildlife Refuge
Harris Neck National Wildlife Refuge
Okefenokee National Wildlife Refuge
Piedmont National Wildlife Refuge
Wassaw National Wildlife Refuge
Wolf Island National Wildlife Refuge

Guam

Guadalupe-Nipomo Dunes National Wildlife Refuge

Hawaii

Hailstone National Wildlife Refuge
Hakalau Forest National Wildlife Refuge
Hanalei National Wildlife Refuge
Hawaiian Islands National Wildlife Refuge
Hule'ia National Wildlife Refuge
James Campbell National Wildlife Refuge
Kakahaia National Wildlife Refuge
Kealia Pond National Wildlife Refuge
Kilauea Point National Wildlife Refuge
Oahu Forest National Wildlife Refuge
Pearl Harbor National Wildlife Refuge
Rose Atoll National Wildlife Refuge

Idaho

Bear Lake National Wildlife Refuge
Camas National Wildlife Refuge
Deer Flat National Wildlife Refuge
Grays Lake National Wildlife Refuge
Kootenai National Wildlife Refuge
Minidoka National Wildlife Refuge
Oxford Slough Waterfowl Production Area

Illinois

Chautauqua National Wildlife Refuge
Crab Orchard National Wildlife Refuge
Cypress Creek National Wildlife Refuge
Emiquon National Wildlife Refuge
Hagerman National Wildlife Refuge
Kankakee NWR and Conservation Area
Meredosia National Wildlife Refuge
Middle Mississippi River National Wildlife Refuge
Two Rivers National Wildlife Refuge

Indiana

Big Oaks National Wildlife Refuge
Muscatatuck National Wildlife Refuge
Patoka River National Wildlife Refuge and Wildlife Management Area

Iowa

DeSoto National Wildlife Refuge
Driftless Area National Wildlife Refuge
Iowa Wetland Management District
Neal Smith National Wildlife Refuge
Port Louisa National Wildlife Refuge
Union Slough National Wildlife Refuge

Kansas

Flint Hills National Wildlife Refuge
Kirwin National Wildlife Refuge
Marais des Cygnes National Wildlife Refuge
Quivira National Wildlife Refuge

Kentucky

Clarks River National Wildlife Refuge
Green River National Wildlife Refuge

Louisiana

Atchafalaya National Wildlife Refuge
Bayou Cocodrie National Wildlife Refuge
Bayou Sauvage National Wildlife Refuge
Bayou Teche National Wildlife Refuge
Big Branch Marsh National Wildlife Refuge
Black Bayou Lake National Wildlife Refuge
Bogue Chitto National Wildlife Refuge
Breton National Wildlife Refuge
Cameron Prairie National Wildlife Refuge
Cat Island National Wildlife Refuge
Catahoula National Wildlife Refuge
D'Arbonne National Wildlife Refuge
Delta National Wildlife Refuge
Grand Cote National Wildlife Refuge
Handy Brake National Wildlife Refuge
Lacassine National Wildlife Refuge
Lake Ophelia National Wildlife Refuge
Louisiana Wetland Management District
Mandalay National Wildlife Refuge
Red River National Wildlife Refuge
Sabine National Wildlife Refuge
Shell Keys National Wildlife Refuge
Tensas River National Wildlife Refuge
Upper Ouachita National Wildlife Refuge

Maine

Aroostook National Wildlife Refuge
Carlton Pond Waterfowl Production Area
Cross Island National Wildlife Refuge
Franklin Island National Wildlife Refuge

Maine Coastal Islands National Wildlife Refuge
Moosehorn National Wildlife Refuge
Petit Manan National Wildlife Refuge
Pond Island National Wildlife Refuge
Rachel Carson National Wildlife Refuge
Seal Island National Wildlife Refuge
Sunkhaze Meadows National Wildlife Refuge

Maryland

Blackwater National Wildlife Refuge
Eastern Neck National Wildlife Refuge
Glenn Martin National Wildlife Refuge
Patuxent Research Refuge
Susquehanna River National Wildlife Refuge

Massachusetts

Assabet River National Wildlife Refuge
Great Meadows National Wildlife Refuge
Mashpee National Wildlife Refuge
Massasoit National Wildlife Refuge
Monomoy National Wildlife Refuge
Nantucket National Wildlife Refuge
Nomans Land Island National Wildlife Refuge
Oxbow National Wildlife Refuge
Parker River National Wildlife Refuge
Silvio O. Conte National Fish & Wildlife Refuge
Thacher Island National Wildlife Refuge

Michigan

Detroit River International Wildlife Refuge
Harbor Island National Wildlife Refuge
Huron National Wildlife Refuge
Kirtlands Warbler Wildlife Management Area
Michigan Islands National Wildlife Refuge
Michigan Wetland Management District
Seney National Wildlife Refuge
Shiawassee National Wildlife Refuge

Minnesota

Agassiz National Wildlife Refuge
Big Stone National Wildlife Refuge
Big Stone Wetland Management District
Crane Meadows National Wildlife Refuge
Detroit Lakes Wetland Management District
Fergus Falls Wetland Management District
Glacial Ridge National Wildlife Refuge
Hamden Slough National Wildlife Refuge
Litchfield Wetland Management District
Mille Lacs National Wildlife Refuge
Minnesota Valley National Wildlife Refuge
Minnesota Valley Wetland Management District
Morris Wetland Management District
Northern Tallgrass Prairie National Wildlife Refuge
Rice Lake National Wildlife Refuge
Rydell National Wildlife Refuge
Sherburne National Wildlife Refuge
Tamarac National Wildlife Refuge
Tamarac Wetland Management District
Upper Mississippi River National Wildlife & Fish Refuge

Mississippi

Coldwater River National Wildlife Refuge
Dahomey National Wildlife Refuge
Grand Bay National Wildlife Refuge
Hillside National Wildlife Refuge
Holt Collier National Wildlife Refuge
Mathews Brake National Wildlife Refuge
Mississippi Sandhill Crane National Wildlife Refuge
Morgan Brake National Wildlife Refuge
Panther Swamp National Wildlife Refuge
Sam D. Hamilton Noxubee National Wildlife Refuge
St. Catherine Creek National Wildlife Refuge
Tallahatchie National Wildlife Refuge
Theodore Roosevelt National Wildlife Refuge
Yazoo National Wildlife Refuge

Missouri

Big Muddy National Fish & Wildlife Refuge
Clarence Cannon National Wildlife Refuge
Great River National Wildlife Refuge
Loess Bluffs National Wildlife Refuge
Mingo National Wildlife Refuge
Ozark Cavefish National Wildlife Refuge
Pilot Knob National Wildlife Refuge
Swan Lake National Wildlife Refuge

Montana

Benton Lake National Wildlife Refuge
Benton Lake Wetland Management District
Black Coulee National Wildlife Refuge
Bowdoin National Wildlife Refuge
Bowdoin Wetland Management District
Charles M. Russell National Wildlife Refuge
Creedman Coulee National Wildlife Refuge
Grass Lake NWR
Hackmatack National Wildlife Refuge
Hewitt Lake National Wildlife Refuge
Lake Mason National Wildlife Refuge
Lake Thibadeau National Wildlife Refuge
Lee Metcalf National Wildlife Refuge
Lost Trail National Wildlife Refuge
Medicine Lake National Wildlife Refuge
National Bison Range
Nine-pipe National Wildlife Refuge
Northeast Montana Wetland Management District
Northwest Montana Wetland Management District
Red Rock Lakes National Wildlife Refuge
Swan River National Wildlife Refuge
UL Bend National Wildlife Refuge
War Horse National Wildlife Refuge

Nebraska

Boyer Chute National Wildlife Refuge
Crescent Lake National Wildlife Refuge
Fort Niobrara National Wildlife Refuge
John W. and Louise Seier National Wildlife Refuge
North Platte National Wildlife Refuge
Rainwater Basin Wetland Management District
Valentine National Wildlife Refuge

Nevada

Anaho Island National Wildlife Refuge
Ash Meadows National Wildlife Refuge
Desert National Wildlife Range
Fallon National Wildlife Refuge
Moapa Valley National Wildlife Refuge
Pahranagat National Wildlife Refuge
Ruby Lake National Wildlife Refuge
Sheldon National Wildlife Refuge
Stillwater National Wildlife Refuge

New Hampshire

Great Bay National Wildlife Refuge
John Hay National Wildlife Refuge
Umbagog National Wildlife Refuge
Wapack National Wildlife Refuge

New Jersey

Cape May National Wildlife Refuge
Edwin B. Forsythe National Wildlife Refuge
Great Swamp National Wildlife Refuge
Supawna Meadows National Wildlife Refuge
Wallkill River National Wildlife Refuge

New Mexico

Bitter Lake National Wildlife Refuge
Bosque del Apache National Wildlife Refuge
Las Vegas National Wildlife Refuge
Maxwell National Wildlife Refuge
Rio Mora National Wildlife Refuge and Conservation Area
San Andres National Wildlife Refuge
Sevilleta National Wildlife Refuge
Valle De Oro National Wildlife Refuge

New York

Amagansett National Wildlife Refuge
Conscience Point National Wildlife Refuge
Elizabeth A. Morton National Wildlife Refuge
Great Thicket National Wildlife Refuge
Iroquois National Wildlife Refuge
Montezuma National Wildlife Refuge
Oyster Bay National Wildlife Refuge
Seatuck National Wildlife Refuge
Shawangunk Grasslands National Wildlife Refuge
Target Rock National Wildlife Refuge
Wallkill River National Wildlife Refuge
Wertheim National Wildlife Refuge

North Carolina

Alligator River National Wildlife Refuge
Cedar Island National Wildlife Refuge
Currituck National Wildlife Refuge
Mackay Island National Wildlife Refuge
Mattamuskeet National Wildlife Refuge
Mountain Bogs National Wildlife Refuge
Pea Island National Wildlife Refuge
Pee Dee National Wildlife Refuge
Pocosin Lakes National Wildlife Refuge
Roanoke River National Wildlife Refuge
Swanquarter National Wildlife Refuge

North Dakota

Arrowwood National Wildlife Refuge
Arrowwood Wetland Management District
Audubon National Wildlife Refuge
Audubon Wetland Management District
Chase Lake National Wildlife Refuge
Chase Lake Wetland Management District
Crosby Wetland Management District
Dakota Tallgrass Prairie Wildlife Management Area
Des Lacs National Wildlife Refuge
Devils Lake Wetland Management District
Florence Lake National Wildlife Refuge
J. Clark Salyer National Wildlife Refuge
J. Clark Salyer Wetland Management District
Kellys Slough National Wildlife Refuge
Kulm Wetland Management District
Lake Alice National Wildlife Refuge
Lake Ilo National Wildlife Refuge
Lake Nettie National Wildlife Refuge
Lake Zahl National Wildlife Refuge
Long Lake National Wildlife Refuge
Long Lake Wetland Management District
Lostwood National Wildlife Refuge
Lostwood Wetland Management District
McLean National Wildlife Refuge
Shell Lake National Wildlife Refuge
Slade National Wildlife Refuge
Stewart Lake National Wildlife Refuge
Sullys Hill National Game Preserve
Tewaukon National Wildlife Refuge
Tewaukon Wetland Management District
Upper Souris National Wildlife Refuge
Valley City Wetland Management District
White Horse Hill
White Lake National Wildlife Refuge

Northern Mariana Islands

Mariana Arc of Fire National Wildlife Refuge
Mariana Trench Marine National Monument
Palmyra Atoll National Wildlife Refuge
Wake Atoll National Wildlife Refuge

Ohio

Cedar Point National Wildlife Refuge
Ottawa National Wildlife Refuge
West Sister Island National Wildlife Refuge

Oklahoma

Deep Fork National Wildlife Refuge
Little River National Wildlife Refuge
Optima National Wildlife Refuge
Ozark Plateau National Wildlife Refuge
Salt Plains National Wildlife Refuge
Sequoyah National Wildlife Refuge
Tishomingo National Wildlife Refuge
Washita National Wildlife Refuge
Wichita Mountains Wildlife Refuge

Oregon

Ankeny National Wildlife Refuge
Bandon Marsh National Wildlife Refuge
Baskett Slough National Wildlife Refuge
Bear Valley National Wildlife Refuge
Cape Meares National Wildlife Refuge
Cold Springs National Wildlife Refuge
Hart Mountain National Antelope Refuge
Klamath Marsh National Wildlife Refuge
Malheur National Wildlife Refuge
McKay Creek National Wildlife Refuge
Nestucca Bay National Wildlife Refuge
Oregon Islands National Wildlife Refuge
Siletz Bay National Wildlife Refuge
Three Arch Rocks National Wildlife Refuge
Tualatin River National Wildlife Refuge
Upper Klamath National Wildlife Refuge
Wapato Lake National Wildlife Refuge
William L. Finley National Wildlife Refuge

Pennsylvania

Cherry Valley National Wildlife Range
Erie National Wildlife Refuge
John Heinz National Wildlife Refuge at Tinicum

Puerto Rico

Cabo Rojo National Wildlife Refuge
Culebra National Wildlife Refuge
Desecheo National Wildlife Refuge
Laguna Cartagena National Wildlife Refuge
Navassa Island National Wildlife Refuge
Vieques National Wildlife Refuge

Rhode Island

Block Island National Wildlife Refuge
John H. Chafee National Wildlife Refuge
Ninigret National Wildlife Refuge
Sachuest Point National Wildlife Refuge
Trustom Pond National Wildlife Refuge

South Carolina

Cape Romain National Wildlife Refuge
Carolina Sandhills National Wildlife Refuge
Ernest F. Hollings ACE Basin National Wildlife Refuge
Pinckney Island National Wildlife Refuge
Santee National Wildlife Refuge
Savannah National Wildlife Refuge
Tybee National Wildlife Refuge
Waccamaw National Wildlife Refuge

South Dakota

Huron Wetland Management District
Karl E. Mundt National Wildlife Refuge
Lacreek National Wildlife Refuge
Lake Andes National Wildlife Refuge
Madison Wetland Management District
Sand Lake National Wildlife Refuge
Sand Lake Wetland Management District
Waubay National Wildlife Refuge

Tennessee

Chickasaw National Wildlife Refuge
Cross Creeks National Wildlife Refuge
Hatchie National Wildlife Refuge
Lake Isom National Wildlife Refuge
Lower Hatchie National Wildlife Refuge
Reelfoot National Wildlife Refuge
Tennessee National Wildlife Refuge

Texas

Anahuac National Wildlife Refuge
Aransas National Wildlife Refuge
Attwater Prairie Chicken National Wildlife Refuge
Balcones Canyonlands National Wildlife Refuge
Big Boggy National Wildlife Refuge
Brazoria National Wildlife Refuge
Buffalo Lake National Wildlife Refuge
Caddo Lake National Wildlife Refuge
Guam National Wildlife Refuge
Laguna Atascosa National Wildlife Refuge
Lower Rio Grande Valley National Wildlife Refuge
McFaddin National Wildlife Refuge
Muleshoe National Wildlife Refuge
Neches River National Wildlife Refuge
San Bernard National Wildlife Refuge
Santa Ana National Wildlife Refuge
Texas Point National Wildlife Refuge
Trinity River National Wildlife Refuge

United States Minor Outlying Islands

Baker Island National Wildlife Refuge
Howland Island National Wildlife Refuge
Jarvis Island National Wildlife Refuge
Johnston Atoll National Wildlife Refuge
Kingman Reef National Wildlife Refuge
Midway Atoll National Wildlife Refuge

Utah

Bear River Migratory Bird Refuge
Fish Springs National Wildlife Refuge
Ouray National Wildlife Refuge

Vermont

Missisquoi National Wildlife Refuge

Virgin Islands

Buck Island National Wildlife Refuge
Green Cay National Wildlife Refuge
Sandy Point National Wildlife Refuge

Virginia

Back Bay National Wildlife Refuge
Chincoteague National Wildlife Refuge
Eastern Shore of Virginia National Wildlife Refuge
Elizabeth Hartwell Mason Neck National Wildlife Refuge
Featherstone National Wildlife Refuge
Fisherman Island National Wildlife Refuge
Great Dismal Swamp National Wildlife Refuge
James River National Wildlife Refuge
Nansemond National Wildlife Refuge
Occoquan Bay National Wildlife Refuge
Plum Tree Island National Wildlife Refuge
Presquile National Wildlife Refuge
Rappahannock River Valley National Wildlife Refuge
Wallops Island National Wildlife Refuge

Washington

Billy Frank Jr. Nisqually National Wildlife Refuge
Columbia National Wildlife Refuge
Conboy Lake National Wildlife Refuge
Copalis National Wildlife Refuge
Dungeness National Wildlife Refuge
Flattery Rocks National Wildlife Refuge
Franz Lake National Wildlife Refuge
Grays Harbor National Wildlife Refuge
Hanford Reach National Monument
Julia Butler Hansen Refuge for the Columbian White-Tailed Deer
Lewis and Clark National Wildlife Refuge
Little Pend Oreille National Wildlife Refuge
McNary National Wildlife Refuge
Pierce National Wildlife Refuge
Protection Island National Wildlife Refuge
Quillayute Needles National Wildlife Refuge
Ridgefield National Wildlife Refuge
Saddle Mountain National Wildlife Refuge
San Juan Islands National Wildlife Refuge
Steigerwald Lake National Wildlife Refuge
Toppenish National Wildlife Refuge
Turnbull National Wildlife Refuge
Umatilla National Wildlife Refuge
Willapa National Wildlife Refuge

West Virginia

Canaan Valley National Wildlife Refuge
Ohio River Islands National Wildlife Refuge

Wisconsin

Fox River National Wildlife Refuge
Gravel Island National Wildlife Refuge
Green Bay National Wildlife Refuge
Hagerman National Wildlife Refuge
Horicon National Wildlife Refuge
Leopold Wetland Management District
Necedah National Wildlife Refuge
St. Croix Wetland Management District
St. Croix Wetland Management District
Trempealeau National Wildlife Refuge
Whittlesey Creek National Wildlife Refuge

Wyoming

Bamforth National Wildlife Refuge
Cokeville Meadows National Wildlife Refuge
Hutton Lake National Wildlife Refuge
Mortenson Lake National Wildlife Refuge
National Elk Refuge National Wildlife Refuge
Pathfinder National Wildlife Refuge
Seedskadee National Wildlife Refuge

A.5 National Wilderness Areas

Alabama

Cheaha Wilderness
Dugger Mountain Wilderness
Sipsey Wilderness

Alaska

Aleutian Islands Wilderness
Andreafsky Wilderness
Becharof Wilderness
Bering Sea Wilderness
Bogoslof Wilderness
Chamisso Wilderness
Chuck River Wilderness
Coronation Island Wilderness
Denali Wilderness
Endicott River Wilderness
Forrester Island Wilderness
Gates of the Arctic Wilderness
Glacier Bay Wilderness

Hazy Islands Wilderness
Innoko Wilderness
Izembek Wilderness
Jay S. Hammond Wilderness
Karta River Wilderness
Katmai Wilderness
Kenai Wilderness
Kobuk Valley Wilderness
Kootznoowoo Wilderness
Koyukuk Wilderness
Kuiu Wilderness
Maurille Islands Wilderness
Misty Fjords National Monument Wilderness
Mollie Beattie Wilderness
Noatak Wilderness
Nunivak Wilderness
Petersburg Creek-Duncan Salt Chuck Wilderness
Pleasant/Lemusurier/Inian Islands Wilderness
Russell Fjord Wilderness
Saint Lazaria Wilderness
Selawik Wilderness
Semidi Wilderness
Simeonof Wilderness
South Baranof Wilderness
South Etolin Wilderness
South Prince of Wales Wilderness
Stikine-LeConte Wilderness
Tebenkof Bay Wilderness
Togiak Wilderness
Tracy Arm-Fords Terror Wilderness
Tuxedni Wilderness
Unimak Wilderness
Warren Island Wilderness
West Chichagof-Yakobi Wilderness
Wrangell-Saint Elias Wilderness

Arizona

Apache Creek Wilderness
Aravaipa Canyon Wilderness
Arrastra Mountain Wilderness
Aubrey Peak Wilderness
Baboquivari Peak Wilderness
Bear Wallow Wilderness
Beaver Dam Mountains Wilderness
Big Horn Mountains Wilderness
Cabeza Prieta Wilderness
Castle Creek Wilderness
Cedar Bench Wilderness
Chiricahua National Monument Wilderness
Chiricahua Wilderness
Cottonwood Point Wilderness
Coyote Mountains Wilderness
Dos Cabezas Mountains Wilderness
Eagletail Mountains Wilderness
East Cactus Plain Wilderness
Escudilla Wilderness
Fishhooks Wilderness
Fossil Springs Wilderness
Four Peaks Wilderness
Galiuro Wilderness
Gibraltar Mountain Wilderness
Grand Wash Cliffs Wilderness
Granite Mountain Wilderness
Harcuvar Mountains Wilderness
Harquahala Mountains Wilderness
Hassayampa River Canyon Wilderness
Havasu Wilderness
Hells Canyon Wilderness
Hellsgate Wilderness
Hummingbird Springs Wilderness
Imperial Refuge Wilderness
Juniper Mesa Wilderness
Kachina Peaks Wilderness
Kanab Creek Wilderness
Kendrick Mountain Wilderness
Kofa Wilderness
Mazatzal Wilderness
Miller Peak Wilderness
Mount Baldy Wilderness
Mount Logan Wilderness
Mount Nutt Wilderness
Mount Tipton Wilderness
Mount Trumbull Wilderness
Mount Wilson Wilderness
Mt. Wrightson Wilderness
Muggins Mountain Wilderness
Munds Mountain Wilderness
Needle's Eye Wilderness
New Water Mountains Wilderness
North Maricopa Mountains Wilderness
North Santa Teresa Wilderness
Organ Pipe Cactus Wilderness
Paiute Wilderness
Pajarita Wilderness
Paria Canyon-Vermilion Cliffs Wilderness
Peloncillo Mountains Wilderness
Petrified Forest National Wilderness Area
Pine Mountain Wilderness
Pusch Ridge Wilderness
Rawhide Mountains Wilderness
Red Rock-Secret Mountain Wilderness
Redfield Canyon Wilderness
Rincon Mountain Wilderness
Saddle Mountain Wilderness
Saguaro Wilderness
Salome Wilderness
Salt River Canyon Wilderness
Santa Teresa Wilderness
Sierra Ancha Wilderness
Sierra Estrella Wilderness
Signal Mountain Wilderness
South Maricopa Mountains Wilderness
Strawberry Crater Wilderness
Superstition Wilderness
Swansea Wilderness
Sycamore Canyon Wilderness
Table Top Wilderness
Tres Alamos Wilderness
Trigo Mountain Wilderness
Upper Burro Creek Wilderness
Wabayuma Peak Wilderness
Warm Springs Wilderness
West Clear Creek Wilderness
Wet Beaver Wilderness
White Canyon Wilderness
Woodchute Wilderness
Woolsey Peak Wilderness

Arkansas

Big Lake Wilderness
Black Fork Mountain Wilderness
Buffalo National River Wilderness
Caney Creek Wilderness
Dry Creek Wilderness
East Fork Wilderness
Flatside Wilderness
Hurricane Creek Wilderness
Leatherwood Wilderness
Poteau Mountain Wilderness
Richland Creek Wilderness
Upper Buffalo Wilderness

California

Agua Tibia Wilderness
Ansel Adams Wilderness
Argus Range Wilderness
Avawatz Mountains Wilderness
Beauty Mountain Wilderness
Big Maria Mountains Wilderness
Bigelow Cholla Garden Wilderness
Bighorn Mountain Wilderness
Black Mountain Wilderness
Bright Star Wilderness
Bristol Mountains Wilderness
Bucks Lake Wilderness
Buzzards Peak Wilderness
Cache Creek Wilderness
Cadiz Dunes Wilderness
Cahuilla Mountain Wilderness
Caribou Wilderness
Carrizo Gorge Wilderness
Carson-Iceberg Wilderness
Castle Crags Wilderness
Cedar Roughs Wilderness
Chanchelulla Wilderness
Chemehuevi Mountains Wilderness
Chimney Peak Wilderness
Chuckwalla Mountains Wilderness
Chumash Wilderness
Cleghorn Lakes Wilderness
Clipper Mountain Wilderness
Coso Range Wilderness
Coyote Mountains Wilderness
Cucamonga Wilderness
Darwin Falls Wilderness
Dead Mountains Wilderness
Death Valley Wilderness
Desolation Wilderness
Dick Smith Wilderness
Dinkey Lakes Wilderness
Domeland Wilderness
El Paso Mountains Wilderness
Elkhorn Ridge Wilderness
Emigrant Wilderness
Farallon Wilderness
Fish Creek Mountains Wilderness
Funeral Mountains Wilderness
Garcia Wilderness
Golden Trout Wilderness
Golden Valley Wilderness
Granite Chief Wilderness
Granite Mountain Wilderness
Grass Valley Wilderness
Great Falls Basin Wilderness
Hain Wilderness
Hauser Wilderness
Havasu Wilderness
Hollow Hills Wilderness
Hoover Wilderness
Ibex Wilderness
Imperial Refuge Wilderness
Indian Pass Wilderness
Inyo Mountains Wilderness
Ishi Wilderness
Jacumba Wilderness
Jennie Lakes Wilderness
John Krebs Wilderness
John Muir Wilderness
Joshua Tree Wilderness
Kaiser Wilderness
Kelso Dunes Wilderness
Kiavah Wilderness
King Range Wilderness
Kingston Range Wilderness
Lassen Volcanic Wilderness
Lava Beds Wilderness
Little Chuckwalla Mountains Wilderness
Little Picacho Wilderness
Machesna Mountain Wilderness
Magic Mountain Wilderness
Malpais Mesa Wilderness
Manly Peak Wilderness
Marble Mountain Wilderness
Matilija Wilderness
Mecca Hills Wilderness
Mesquite Wilderness

Milpitas Wash Wilderness
Mojave Wilderness
Mokelumne Wilderness
Monarch Wilderness
Mount Lassic Wilderness
Mt. Shasta Wilderness
Newberry Mountains Wilderness
Nopah Range Wilderness
North Algodones Dunes Wilderness
North Fork Wilderness
North Mesquite Mountains Wilderness
Old Woman Mountains Wilderness
Orocopia Mountains Wilderness
Otay Mountain Wilderness
Owens Peak Wilderness
Owens River Headwaters
Wilderness Pahrump Valley Wilderness
Palen/McCoy Wilderness
Palo Verde Mountains Wilderness
Phillip Burton Wilderness
Picacho Peak Wilderness
Pine Creek Wilderness
Pinto Mountains Wilderness
Piper Mountain Wilderness
Piute Mountains Wilderness
Pleasant View Ridge Wilderness
Red Buttes Wilderness
Resting Spring Range Wilderness
Rice Valley Wilderness
Riverside Mountains Wilderness
Rocks and Islands Wilderness
Rodman Mountains Wilderness
Russian Wilderness
Sacatar Trail Wilderness
Saddle Peak Hills Wilderness
San Gabriel Wilderness
San Gorgonio Wilderness
San Jacinto Wilderness
San Mateo Canyon Wilderness
San Rafael Wilderness
Sanhedrin Wilderness
Santa Lucia Wilderness
Santa Rosa Wilderness
Sawtooth Mountains Wilderness
Sequoia-Kings Canyon Wilderness
Sespe Wilderness
Sheep Mountain Wilderness
Sheephole Valley Wilderness
Silver Peak Wilderness
Siskiyou Wilderness
Snow Mountain Wilderness
Soda Mountains Wilderness
South Fork Eel River Wilderness
South Fork San Jacinto Wilderness
South Nopah Range Wilderness
South Sierra Wilderness
South Warner Wilderness
Stateline Wilderness
Stepladder Mountains Wilderness
Surprise Canyon Wilderness
Sylvania Mountains Wilderness
Thousand Lakes Wilderness
Trilobite Wilderness
Trinity Alps Wilderness
Turtle Mountains Wilderness
Ventana Wilderness
Whipple Mountains Wilderness
White Mountains Wilderness
Yolla Bolly-Middle Eel Wilderness
Yosemite Wilderness
Yuki Wilderness

Colorado

Black Canyon of the Gunnison Wilderness
Black Ridge Canyons Wilderness
Buffalo Peaks Wilderness
Byers Peak Wilderness
Cache La Poudre Wilderness
Collegiate Peaks Wilderness
Comanche Peak Wilderness
Dominguez Canyon Wilderness
Eagles Nest Wilderness
Flat Tops Wilderness
Fossil Ridge Wilderness
Great Sand Dunes Wilderness
Greenhorn Mountain Wilderness
Gunnison Gorge Wilderness
Hermosa Creek Wilderness
Holy Cross Wilderness
Hunter-Fryingpan Wilderness
Indian Peaks Wilderness
James Peak Wilderness
La Garita Wilderness
Lizard Head Wilderness
Lost Creek Wilderness
Maroon Bells-Snowmass Wilderness
Mesa Verde Wilderness
Mount Evans Wilderness
Mount Massive Wilderness
Mount Sneffels Wilderness
Mount Zirkel Wilderness
Neota Wilderness
Never Summer Wilderness
Platte River Wilderness
Powderhorn Wilderness
Ptarmigan Peak Wilderness
Raggeds Wilderness
Rawah Wilderness
Rocky Mountain National Park Wilderness
Sangre de Cristo Wilderness
Sarvis Creek Wilderness
South San Juan Wilderness
Spanish Peaks Wilderness
Uncompahgre Wilderness
Vasquez Peak Wilderness
Weminuche Wilderness
West Elk Wilderness

Florida

Alexander Springs Wilderness
Big Gum Swamp Wilderness
Billies Bay Wilderness
Bradwell Bay Wilderness
Cedar Keys Wilderness
Chassahowitzka Wilderness
Florida Keys Wilderness
Island Bay Wilderness
J.N. ''Ding'' Darling Wilderness
Juniper Prairie Wilderness
Lake Woodruff Wilderness
Little Lake George Wilderness
Marjory Stoneman Douglas Wilderness
Mud Swamp/New River Wilderness
Passage Key Wilderness
Pelican Island Wilderness
St. Marks Wilderness

Georgia

Big Frog Wilderness
Blackbeard Island Wilderness
Blood Mountain Wilderness
Brasstown Wilderness
Cohutta Wilderness
Cumberland Island Wilderness
Ellicott Rock Wilderness
Mark Trail Wilderness
Okefenokee Wilderness
Raven Cliffs Wilderness
Rich Mountain Wilderness
Southern Nantahala Wilderness
Tray Mountain Wilderness
Wolf Island Wilderness

Hawaii

Hawaii Haleakala Wilderness
Hawaii Volcanoes Wilderness

Idaho

Big Jacks Creek Wilderness
Bruneau-Jarbidge Rivers Wilderness
Cecil D. Andrus-White Clouds Wilderness
Craters of the Moon National Wilderness Area
Frank Church-River of No Return Wilderness
Gospel-Hump Wilderness
Hells Canyon Wilderness
Hemingway-Boulders Wilderness
Jim McClure-Jerry Peak Wilderness
Little Jacks Creek Wilderness
North Fork Owyhee Wilderness
Owyhee River Wilderness
Pole Creek Wilderness
Sawtooth Wilderness
Selway-Bitterroot Wilderness

Illinois

Bald Knob Wilderness
Bay Creek Wilderness
Burden Falls Wilderness
Clear Springs Wilderness
Crab Orchard Wilderness
Garden of the Gods Wilderness
Lusk Creek Wilderness
Panther Den Wilderness

Indiana

Charles C. Deam Wilderness

Kentucky

Beaver Creek Wilderness
Clifty Wilderness

Louisiana

Breton Wilderness
Kisatchie Hills Wilderness
Lacassine Wilderness

Maine

Caribou-Speckled Mountain Wilderness
Moosehorn (Baring Unit) Wilderness
Moosehorn Wilderness

Massachusetts

Monomoy Wilderness

Michigan

Beaver Basin Wilderness
Big Island Lake Wilderness
Delirium Wilderness
Horseshoe Bay Wilderness
Huron Islands Wilderness
Isle Royale Wilderness
Mackinac Wilderness
McCormick Wilderness
Michigan Islands Wilderness
Nordhouse Dunes Wilderness
Rock River Canyon Wilderness
Round Island Wilderness
Seney Wilderness
Sleeping Bear Dunes Wilderness
Sturgeon River Gorge Wilderness
Sylvania Wilderness

Minnesota

Agassiz Wilderness
Boundary Waters Canoe Area Wilderness
Tamarac Wilderness

Mississippi

Black Creek Wilderness

Gulf Islands Wilderness
Leaf Wilderness

Missouri

Bell Mountain Wilderness
Devils Backbone Wilderness
Hercules-Glades Wilderness
Irish Wilderness
Mingo Wilderness
Paddy Creek Wilderness
Piney Creek Wilderness
Rockpile Mountain Wilderness

Montana

Absaroka-Beartooth Wilderness
Anaconda Pintler Wilderness
Bob Marshall Wilderness
Cabinet Mountains Wilderness
Gates of the Mountains Wilderness
Great Bear Wilderness
Lee Metcalf Wilderness
Medicine Lake Wilderness
Mission Mountains Wilderness
Rattlesnake Wilderness
Red Rock Lakes Wilderness
Scapegoat Wilderness
Selway-Bitterroot Wilderness
UL Bend Wilderness

Nebraska

Fort Niobrara Wilderness
Soldier Creek Wilderness

Nevada

Alta Toquima Wilderness
Arc Dome Wilderness
Arrow Canyon Wilderness
Bald Mountain Wilderness
Becky Peak Wilderness
Big Rocks Wilderness
Black Canyon Wilderness
Black Rock Desert Wilderness
Boundary Peak Wilderness
Bridge Canyon Wilderness
Bristlecone Wilderness
Calico Mountains Wilderness
Clover Mountains Wilderness
Currant Mountain Wilderness
Death Valley Wilderness
Delamar Mountains Wilderness
East Fork High Rock Canyon Wilderness
East Humboldts Wilderness
Eldorado Wilderness
Far South Egans Wilderness
Fortification Range Wilderness
Goshute Canyon Wilderness
Government Peak Wilderness
Grant Range Wilderness
High Rock Canyon Wilderness
High Rock Lake Wilderness
High Schells Wilderness
Highland Ridge Wilderness
Ireteba Peaks Wilderness
Jarbidge Wilderness
Jimbilnan Wilderness
Jumbo Springs Wilderness
La Madre Mountain Wilderness
Lime Canyon Wilderness
Little High Rock Canyon Wilderness
Meadow Valley Range Wilderness
Mormon Mountains Wilderness
Mount Grafton Wilderness
Mt. Charleston Wilderness
Mt. Irish Wilderness
Mt. Moriah Wilderness
Mt. Rose Wilderness
Muddy Mountains Wilderness
Nellis Wash Wilderness
North Black Rock Range Wilderness
North Jackson Mountains Wilderness
North McCullough Wilderness
Pahute Peak Wilderness
Parsnip Peak Wilderness
Pine Forest Range Wilderness
Pinto Valley Wilderness
Quinn Canyon Wilderness
Rainbow Mountain Wilderness
Red Mountain Wilderness
Ruby Mountains Wilderness
Santa Rosa-Paradise Peak Wilderness
Shellback Wilderness
South Egan Range Wilderness
South Jackson Mountains Wilderness
South McCullough Wilderness
South Pahroc Range Wilderness
Spirit Mountain Wilderness
Table Mountain Wilderness
Tunnel Spring Wilderness
Wee Thump Joshua Tree Wilderness
Weepah Spring Wilderness
White Pine Range Wilderness
White Rock Range Wilderness
Worthington Mountains Wilderness
Wovoka Wilderness

New Hampshire

Great Gulf Wilderness
Pemigewasset Wilderness
Presidential Range-Dry River Wilderness
Sandwich Range Wilderness
Wild River Wilderness

New Jersey

Brigantine Wilderness
Great Swamp National Wildlife Refuge Wilderness

New Mexico

Aden Lava Flow Wilderness
Ah-shi-sle-pah Wilderness
Aldo Leopold Wilderness
Apache Kid Wilderness
Bandelier Wilderness
Bisti/De-Na-Zin Wilderness
Blue Range Wilderness
Bosque del Apache Wilderness
Broad Canyon Wilderness
Capitan Mountains Wilderness
Carlsbad Caverns Wilderness
Cebolla Wilderness
Cerro del Yuta Wilderness
Chama River Canyon Wilderness
Cinder Cone Wilderness
Columbine-Hondo Wilderness
Cruces Basin Wilderness
Dome Wilderness
East Potrillo Mountains
Gila Wilderness
Latir Peak Wilderness
Manzano Mountain Wilderness
Mount Riley Wilderness
Ojito Wilderness
Organ Mountains Wilderness
Pecos Wilderness
Potrillo Mountains Wilderness
Rio San Antonio Wilderness
Robledo Mountains Wilderness
Sabinoso Wilderness
Salt Creek Wilderness
San Pedro Parks Wilderness
Sandia Mountain Wilderness
Sierra de las Uvas Wilderness
West Malpais Wilderness
Wheeler Peak Wilderness
White Mountain Wilderness
Whitethorn Wilderness
Withington Wilderness

New York

Otis Pike Fire Island High Dune Wilderness

North Carolina

Birkhead Mountains Wilderness
Catfish Lake South Wilderness
Ellicott Rock Wilderness
Joyce Kilmer-Slickrock Wilderness
Linville Gorge Wilderness
Middle Prong Wilderness
Pocosin Wilderness
Pond Pine Wilderness
Sheep Ridge Wilderness
Shining Rock Wilderness
Southern Nantahala Wilderness
Swanquarter Wilderness

North Dakota

Chase Lake Wilderness
Lostwood Wilderness
Theodore Roosevelt Wilderness

Ohio

West Sister Island Wilderness

Oklahoma

Black Fork Mountain Wilderness
Upper Kiamichi River Wilderness
Wichita Mountains Wilderness

Oregon

Badger Creek Wilderness
Black Canyon Wilderness
Boulder Creek Wilderness
Bridge Creek Wilderness
Bull of the Woods Wilderness
Clackamas Wilderness
Copper Salmon Wilderness
Cummins Creek Wilderness
Diamond Peak Wilderness
Devils Staircase Wilderness
Drift Creek Wilderness
Eagle Cap Wilderness
Gearhart Mountain Wilderness
Grassy Knob Wilderness
Hells Canyon Wilderness
Kalmiopsis Wilderness
Lower White River Wilderness
Mark O. Hatfield Wilderness
Menagerie Wilderness
Middle Santiam Wilderness
Mill Creek Wilderness
Monument Rock Wilderness
Mount Hood Wilderness
Mount Jefferson Wilderness
Mount Thielsen Wilderness
Mount Washington Wilderness
Mountain Lakes Wilderness
North Fork John Day Wilderness
North Fork Umatilla Wilderness
Opal Creek Wilderness
Oregon Badlands Wilderness
Oregon Islands Wilderness
Red Buttes Wilderness
Roaring River Wilderness
Rock Creek Wilderness
Rogue-Umpqua Divide Wilderness
Salmon-Huckleberry Wilderness
Sky Lakes Wilderness
Soda Mountain Wilderness
Spring Basin Wilderness
Steens Mountain Wilderness
Strawberry Mountain Wilderness

Table Rock Wilderness
Three Arch Rocks Wilderness
Three Sisters Wilderness
Waldo Lake Wilderness
Wenaha-Tucannon Wilderness
Wild Rogue Wilderness

Pennsylvania

Allegheny Islands Wilderness
Hickory Creek Wilderness

Puerto Rico

El Toro Wilderness

South Carolina

Cape Romain Wilderness
Congaree National Park Wilderness
Ellicott Rock Wilderness
Hell Hole Bay Wilderness
Little Wambaw Swamp Wilderness
Wambaw Creek Wilderness
Wambaw Swamp Wilderness

South Dakota

Badlands Wilderness
Black Elk Wilderness

Tennessee

Bald River Gorge Wilderness
Big Frog Wilderness
Big Laurel Branch Wilderness
Citico Creek Wilderness
Cohutta Wilderness
Gee Creek Wilderness
Joyce Kilmer-Slickrock Wilderness
Little Frog Mountain Wilderness
Pond Mountain Wilderness
Sampson Mountain Wilderness
Unaka Mountain Wilderness
Upper Bald River Wilderness

Texas

Big Slough Wilderness
Guadalupe Mountains Wilderness
Indian Mounds Wilderness
Little Lake Creek Wilderness
Turkey Hill Wilderness
Upland Island Wilderness

Utah

Ashdown Gorge Wilderness
Beartrap Canyon Wilderness
Beaver Dam Mountains Wilderness
Big Wild Horse Mesa Wilderness
Blackridge Wilderness
Black Ridge Canyons Wilderness
Box-Death Hollow Wilderness
Canaan Mountain Wilderness
Cedar Mountain Wilderness Area
Cold Wash Wilderness
Cottonwood Canyon Wilderness
Cottonwood Forest Wilderness
Cougar Canyon Wilderness
Dark Canyon Wilderness
Deep Creek North Wilderness
Deep Creek Wilderness
Deseret Peak Wilderness
Desolation Canyon Wilderness
Devil's Canyon Wilderness
Doc's Pass Wilderness
Eagle Canyon Wilderness
Goose Creek Wilderness
High Uintas Wilderness
Horse Valley Wilderness
Labyrinth Canyon Wilderness
LaVerkin Creek Wilderness
Little Ocean Draw Wilderness
Little Wild Horse Canyon Wilderness
Lone Peak Wilderness
Lower Last Chance Wilderness
Mexican Mountain Wilderness
Middle Wild Horse Mesa Wilderness
Mount Naomi Wilderness
Mount Nebo Wilderness
Mount Olympus Wilderness
Mount Timpanogos Wilderness
Muddy Creek Wilderness
Nelson Mountain Wilderness
Paria Canyon-Vermilion Cliffs Wilderness
Pine Valley Mountain Wilderness
Red Butte Wilderness
Red's Canyon Wilderness
Red Mountain Wilderness
San Rafael Reef Wilderness
Sid's Mountain Wilderness
Slaughter Creek Wilderness
Taylor Creek Wilderness
Turtle Canyon Wilderness
Twin Peaks Wilderness
Wellsville Mountain Wilderness
Zion Wilderness

Vermont

Big Branch Wilderness
Breadloaf Wilderness
Bristol Cliffs Wilderness
George D. Aiken Wilderness
Glastenbury Wilderness
Joseph Battell Wilderness
Lye Brook Wilderness
Peru Peak Wilderness

Virginia

Barbours Creek Wilderness
Beartown Wilderness
Brush Mountain East Wilderness
Brush Mountain Wilderness
Garden Mountain Wilderness
Hunting Camp Creek Wilderness
James River Face Wilderness
Kimberling Creek Wilderness
Lewis Fork Wilderness
Little Dry Run Wilderness
Little Wilson Creek Wilderness
Mountain Lake Wilderness
Peters Mountain Wilderness
Priest Wilderness
Raccoon Branch Wilderness
Ramseys Draft Wilderness
Rich Hole Wilderness
Rough Mountain Wilderness
Saint Mary's Wilderness
Shawvers Run Wilderness
Shenandoah Wilderness
Stone Mountain Wilderness
Three Ridges Wilderness
Thunder Ridge Wilderness

Washington

Alpine Lakes Wilderness
Boulder River Wilderness
Buckhorn Wilderness
Clearwater Wilderness
Colonel Bob Wilderness
Daniel J. Evans Wilderness
Glacier Peak Wilderness
Glacier View Wilderness
Goat Rocks Wilderness
Henry M. Jackson Wilderness
Indian Heaven Wilderness
Juniper Dunes Wilderness
Lake Chelan-Sawtooth Wilderness
Mount Adams Wilderness
Mount Baker Wilderness
Mount Rainier Wilderness
Mount Skokomish Wilderness
Noisy-Diobsud Wilderness
Norse Peak Wilderness
Pasayten Wilderness
Salmo-Priest Wilderness
San Juan Wilderness
Stephen Mather Wilderness
Tatoosh Wilderness
The Brothers Wilderness
Trapper Creek Wilderness
Washington Islands Wilderness
Wenaha-Tucannon Wilderness
Wild Sky Wilderness
William O. Douglas Wilderness
Wonder Mountain Wilderness

West Virginia

Big Draft Wilderness
Cranberry Wilderness
Dolly Sods Wilderness
Laurel Fork North Wilderness
Laurel Fork South Wilderness
Mountain Lake Wilderness
Roaring Plains West Wilderness
Otter Creek Wilderness
Spice Run Wilderness

Wisconsin

Blackjack Springs Wilderness
Gaylord A. Nelson Wilderness
Headwaters Wilderness
Porcupine Lake Wilderness
Rainbow Lake Wilderness
Whisker Lake Wilderness
Wisconsin Islands Wilderness

Wyoming

Absaroka-Beartooth Wilderness
Bridger Wilderness
Cloud Peak Wilderness
Encampment River Wilderness
Fitzpatrick Wilderness
Gros Ventre Wilderness
Huston Park Wilderness
Jedediah Smith Wilderness
North Absaroka Wilderness
Platte River Wilderness
Popo Agie Wilderness
Savage Run Wilderness
Teton Wilderness
Washakie Wilderness
Winegar Hole Wilderness

A.6 National Wild and Scenic Rivers

Alabama

Sipsey Fork of the West Fork River

Alaska

Alagnak River
Alatna River
Andreafsky River
Aniakchak River
Beaver Creek
Birch Creek
Charley River
Chilikadrotna River
Delta River
Fortymile River
Gulkana River
Ivishak River
John River
Kobuk River
Koyukuk River (North Fork)
Mulchatna River
Noatak River

Nowitna River
Salmon River
Selawik River
Sheenjek River
Tinayguk River
Tlikakila River
Unalakleet River
Wind River

Arizona

Fossil Creek
Verde River

Arkansas

Big Piney Creek
Buffalo River
Cossatot River
Hurricane Creek
Little Missouri River
Mulberry River
North Sylamore Creek
Richland Creek

California

Amargosa River
American River (Lower)
American River (North Fork)
Bautista Creek
Big Sur River
Black Butte River
Cottonwood Creek
Deep Creek
Eel River
Feather River
Fuller Mill Creek
Kern River
Kings River
Klamath River
Merced River
Owens River Headwaters
Palm Canyon Creek
Piru Creek
San Jacinto River (North Fork)
Sespe Creek
Sisquoc River
Surprise Canyon Creek
Smith River
Trinity River
Tuolumne River
Whitewater River

Colorado

Cache la Poudre River

Connecticut

Eightmile River
Farmington (Lower) River & Salmon Brook
Farmington (West Branch) River
Wood & Pawcatuck Rivers

Delaware

White Clay Creek

Florida

Loxahatchee River
Wekiva River

Georgia

Chattooga River

Idaho

Battle Creek
Big Jacks Creek
Bruneau River
Bruneau River (West Fork)
Clearwater River (Middle Fork)
Cottonwood Creek
Deep Creek
Dickshooter Creek
Duncan Creek
Jarbidge River
Little Jacks Creek
Owyhee River
Owyhee River (North Fork)
Owyhee River (South Fork)
Rapid River
Red Canyon
St. Joe River
Salmon River
Salmon River (Middle Fork)
Sheep Creek
Snake River
Wickahoney Creek

Illinois

Vermilion River

Kentucky

Red River

Louisiana

Saline Bayou

Maine

Allagash Wilderness Waterway

Massachusetts

Nashua, Squannacook, Nissitissit Rivers
Sudbury, Assabet, Concord Rivers
Taunton River
Westfield River

Michigan

AuSable River
Bear Creek
Black River
Carp River
Indian River
Manistee River
Ontonagon River
Paint River
Pere Marquette River
Pine River
Presque Isle River
Sturgeon River (Hiawatha National Forest)
Sturgeon River (Ottawa National Forest)
Tahquamenon River (East Branch)
Whitefish River
Yellow Dog River

Minnesota

St. Croix River

Mississippi

Black Creek

Missouri

Eleven Point River

Montana

East Rosebud Creek
Flathead River
Missouri River

Nebraska

Missouri River
Niobrara River

New Hampshire

Lamprey River
Nashua, Squannacook, Nissitissit Rivers
Wildcat River

New Jersey

Delaware River (Lower)
Delaware River (Middle)
Great Egg Harbor River
Maurice River
Musconetcong River

New Mexico

Jemez River (East Fork)
Pecos River
Rio Chama
Rio Grande

New York

Delaware River (Upper)

North Carolina

Chattooga River
Horsepasture River
Lumber River
New River
Wilson Creek

Ohio

Big & Little Darby Creeks
Little Beaver Creek
Little Miami River

Oregon

Big Marsh Creek
Chetco River
Clackamas River
Clackamas River (South Fork)
Collawash River
Crescent Creek
Crooked River
Crooked River (North Fork)
Deschutes River
Donner und Blitzen River
Eagle Creek (Mt. Hood National Forest)
Eagle Creek (Wallowa-Whitman National Forest)
Elk Creek
Elk River
Elkhorn Creek
Fifteenmile Creek
Fish Creek
Franklin Creek
Grande Ronde River
Hood River (East Fork)
Hood River (Middle Fork)
Illinois River
Imnaha River
Jenny Creek
John Day River
John Day River (North Fork)
John Day River (South Fork)
Joseph Creek
Klamath River
Little Deschutes River
Lobster Creek
Lostine River
Malheur River
Malheur River (North Fork)
McKenzie River
Metolius River
Minam River
Molalla River
Nestucca River
North Powder River
North Umpqua River
Owyhee River
Owyhee River (North Fork)
Powder River
Quartzville Creek
River Styx
Roaring River
Roaring River (South Fork)
Rogue River

Rogue River (Upper)
Salmon River
Sandy River
Silver Creek (North Fork)
Smith River (North Fork)
Snake River
Sprague River
Spring Creek
Sycan River
Walker Creek
Wallowa River
Wasson Creek
Wenaha River
West Little Owyhee River
Whychus Creek
White River
Wildhorse & Kiger Creeks
Willamette River (North Fork Middle Fork)
Zigzag River

Pennsylvania

Allegheny River
Clarion River
Delaware River (Lower)
Delaware River (Middle)
Delaware River (Upper)
White Clay Creek

Puerto Rico

Rio de la Mina
Rio Icacos
Rio Mameyes

Rhode Island

Wood & Pawcatuck Rivers

South Carolina

Chattooga River

South Dakota

Missouri

Tennessee

Obed River

Texas

Rio Grande

Utah

Green River
Virgin River

Vermont

Missisquoi & Trout Rivers

Washington

Illabot Creek
Klickitat River
Pratt River
Skagit River
Snoqualmie (Middle Fork) River
White Salmon River

West Virginia

Bluestone River

Wisconsin

St. Croix River
Wolf River

Wyoming

Snake River Headwaters
Yellowstone River (Clark's Fork)

[FR Doc. 2020–22385 Filed 10–16–20; 4:15 pm]

BILLING CODE 6560–50–P

FEDERAL REGISTER

Vol. 85 Monday,

No. 207 October 26, 2020

Part III

Consumer Product Safety Commission

16 CFR Parts 1112, 1130, et al.
Safety Standard for Crib Mattresses; Proposed Rule

CONSUMER PRODUCT SAFETY COMMISSION

16 CFR Parts 1112, 1130 and 1241

[CPSC Docket No. 2020–0023]

Safety Standard for Crib Mattresses

AGENCY: Consumer Product Safety Commission.

ACTION: Notice of proposed rulemaking.

SUMMARY: The Danny Keysar Child Product Safety Notification Act, section 104 of the Consumer Product Safety Improvement Act of 2008 (CPSIA), requires the United States Consumer Product Safety Commission (CPSC) to promulgate consumer product safety standards for durable infant or toddler products. These standards are to be ''substantially the same as'' the applicable voluntary standard, or more stringent than the voluntary standard, if the Commission determines that more stringent requirements would further reduce the risk of injury associated with the product. The Commission is proposing a safety standard for crib mattresses. The scope of the proposed rule includes full-size and non-full-size crib mattresses, as well as after-market mattresses for play yards and non-full-size cribs. The Commission is also proposing to amend CPSC's consumer registration requirements to identify crib mattresses within the scope of the proposed rule as durable infant or toddler products, and proposing to amend CPSC's list of notice of requirements (NORs) to include such crib mattresses.

DATES: Submit comments by January 11, 2021.

ADDRESSES: Comments related to the Paperwork Reduction Act aspects of the marking, labeling, and instructional literature requirements of the proposed mandatory standard for crib mattresses should be directed to the Office of Information and Regulatory Affairs, the Office of Management and Budget, Attn: CPSC Desk Officer, Fax: 202–395–6974, or emailed to *oira_submission@omb.eop.gov.*

Other comments, identified by Docket No. CPSC–2020–0023, may be submitted electronically or in writing:

Electronic Submissions: Submit electronic comments to the Federal eRulemaking Portal at: *http://www.regulations.gov.* Follow the instructions for submitting comments. CPSC does not accept comments submitted by electronic mail (email), except through *www.regulations.gov.* CPSC encourages you to submit electronic comments by using the Federal eRulemaking Portal, as described above.

Mail/Hand Delivery/Courier Written Submissions: Submit comments by mail/hand delivery/courier to: Division of the Secretariat, Consumer Product Safety Commission, Room 820, 4330 East-West Highway, Bethesda, MD 20814; telephone: (301) 504–7479; email: *cpsc-os@cpsc.gov.*

Instructions: All submissions must include the agency name and docket number for this notification. CPSC may post all comments received without change, including any personal identifiers, contact information, or other personal information provided, to: *https://www.regulations.gov.* Do not submit electronically: Confidential business information, trade secret information, or other sensitive or protected information that you do not want to be available to the public. If you wish to submit such information, please submit it according to the instructions for mail/hand delivery/courier submissions.

Docket: For access to the docket to read background documents or comments received, go to: *http://www.regulations.gov,* and insert the docket number, CPSC–2020–0023, into the ''Search'' box, and follow the prompts.

FOR FURTHER INFORMATION CONTACT: Hope E J. Nesteruk, Project Manager, Directorate for Engineering, U.S. Consumer Product Safety Commission, 5 Research Place, Rockville, MD 20850; telephone: (301) 987–2547; email: *HNesteruk@cpsc.gov.*

SUPPLEMENTARY INFORMATION:

I. Background and Statutory Authority

A. Background

On June 16, 2015, the president of Keeping Babies Safe (KBS) and the mother of a child who died in an incident involving an after-market play yard mattress, petitioned the CPSC, requesting a ban on supplemental mattresses for play yards with non-rigid sides (petition CP 15–2: Petition Requesting Rulemaking on Supplemental Mattresses for Play Yards with Non-Rigid Sides). The petitioner alleged that ''thicker mattresses create a suffocation hazard because they create a gap between the mattress pad sides and the side of the portable crib where a baby can suffocate when the baby's head falls in such gap while lying in the prone position.'' Petitioner asserted that ''no feasible consumer product safety standard would adequately protect babies from the unreasonable risk of injury and death associated with the product.''

CPSC staff prepared a briefing package for the petition, recommending that the Commission defer action on the petition, so that staff could work on voluntary standards for crib mattresses and play yards to address the hazards identified in the petition. Staff noted that any work on the play yard voluntary standard could become a mandatory standard through the Public Law 112–28 update process, because the Commission has an existing mandatory standard for play yards (16 CFR part 1221); however, any changes to the crib mattress voluntary standard would remain a voluntary standard, because the Commission does not have a mandatory rule for crib mattresses.

On May 25, 2017, in response to the petition request and staff's recommendation to defer the petition, the Commission voted [1] (3–2) to ''take other action'' and granted the petition, directing staff to: (1) Initiate a rulemaking under section 104 of the CPSIA for a mandatory consumer product safety standard that will address the risk of injury associated with the use of crib mattresses, (2) include ''supplemental and aftermarket mattresses used in play yards and portable cribs'' [2] within the scope of the crib mattress rulemaking, and (3) update the product registration card rule (16 CFR part 1130) to include ''crib mattresses'' in the list of durable infant or toddler products subject to the rule.

[1] *https://www.cpsc.gov/s3fs-public/RCA-Petition_CP_15-2_Requesting_Ban_on_Supplemental_Mattresses_for_Play_Yards_with_Non-Rigid_Sides_052517.pdf.*

[2] Although the petitioner used the term ''supplemental mattress,'' ASTM F2933–19 uses and defines the term ''after-market'' mattress. Both terms refer to a mattress that is bought separately from a play yard or non-full-size crib. This NPR will use the defined term ''after-market'' mattress. Section 3.1.1 of ASTM F2933–19 defines an ''after-market mattress for a play yard or non-full-size crib'' as ''a mattress sold or distributed for a play yard or non-full-sized crib.'' Section 3.1.1.1 of ASTM F2933–19 states that it does not include a replacement mattress sold by an original equipment manufacturer as a replacement, if it is equivalent to the mattress originally provided with the product.

The Commission issues this notice of proposed rulemaking (NPR) under section 104 of the CPSIA to propose a mandatory consumer product safety standard for crib mattresses.[3] Unless otherwise stated, the term ''crib mattresses'' in this NPR includes products within the scope of the voluntary standard for crib mattresses, ASTM F2933–19, *Standard Consumer Safety Specification for Crib Mattresses* (ASTM F2933–19): Full-size crib mattresses, non-full-size mattresses, and after-market mattresses for play yards and non-full-size crib mattresses.

B. Statutory Authority

Section 104(b) of the CPSIA requires the Commission to: (1) Examine and assess the effectiveness of voluntary consumer product safety standards for durable infant or toddler products, in consultation with representatives of consumer groups, juvenile product manufacturers, and independent child product engineers and experts; and (2) promulgate consumer product safety standards for durable infant or toddler products. 15 U.S.C. 2056a(b). Standards issued under section 104 are to be ''substantially the same as'' the applicable voluntary standards, or more stringent than the voluntary standard, if the Commission determines that more stringent requirements would further reduce the risk of injury associated with the product. *Id.* at 2056a(b)(1)(B).

Regarding the consultation requirement in section 104(b)(1) of the CPSIA, CPSC staff regularly participates in the juvenile products subcommittee meetings of ASTM International (ASTM). ASTM subcommittees consist of members who represent producers, users, consumers, government, and academia.[4] The consultation process for the crib mattresses rulemaking commenced during the ASTM subcommittee meeting in May 2018, when CPSC staff presented initial recommendations for updating the crib mattress voluntary standard to address the incident data. Since then, staff has actively participated with the ASTM F15.66 subcommittee for Crib Mattresses in revising ASTM F2933, *Standard Consumer Safety Specification for Crib Mattresses,* to address the associated hazards.

Section 104(d) of the CPSIA requires manufacturers of durable infant or toddler products to establish a product registration program and comply with CPSC's implementing rule, 16 CFR part 1130. Any product defined as a ''durable infant or toddler product'' in part 1130 must comply with the product registration requirements, as well as testing and certification requirements for children's products, as codified in 16 CFR parts 1107 and 1109. Section 104(f)(1) of the CPSIA defines a ''durable infant or toddler product'' as a ''durable product intended for use, or that may be reasonably expected to be used, by children under the age of 5 years.'' 15 U.S.C. 2056a(f)(1). Section 104(f)(2) of the CPSIA includes a list of categories of products that are durable infant or toddler products, including infant sleep products, such as cribs (full-size and non-full-size), toddler beds, bassinets and cradles, and play yards. *Id.* 2056a(f)(2).

Although crib mattresses are used with infant sleep products, crib mattresses are not included in the statutory list of durable infant or toddler products. The Commission proposes to amend part 1130 to include ''crib mattresses'' within the scope of ASTM F2933, as durable infant or toddler products. As set forth in section IX of this preamble, the Commission previously explained that the statutory product list is not exhaustive, and the Commission has added products to the list of durable infant or toddler products. The Commission proposes to include ''crib mattresses'' as a ''durable infant or toddler product'' because: (1) They are intended for use, and may be reasonably expected to be used, by children under the age of 5 years; (2) they are products similar to the products listed in section 104(f)(2) of the CPSIA; (3) they are used in conjunction with other durable infant or toddler products used for unattended infant sleep, such as cribs, bassinets, and play yards; and (4) CPSC cannot fully address the risk of injury associated with such infant sleep products without addressing the hazards associated with the use of crib mattresses in these infant sleep products.

C. NPR Overview

Pursuant to section 104 of the CPSIA, the Commission proposes to issue a mandatory standard for crib mattresses, incorporating by reference ASTM F2933–19, with modifications to make the standard more stringent, to further reduce the risk of injury associated with the use of crib mattresses. Proposed modifications in this NPR address: (1) Suffocation hazards associated with crib mattresses, due to overly soft mattresses, by adding a test for mattress firmness based on sections 6 and 8 of A*S/NZS 8811.1:2013—Methods of testing infant products—Method 1: Sleep Surfaces—Test* (AS/NZS 8811.1); (2) entrapment hazards associated with full-size crib mattresses, due to poor mattress fit from compression by sheets, by repeating the dimensional conformity test and measuring for corner gaps, after installing a shrunken (by washing twice) cotton sheet; (3) entrapment hazards associated with after-market, non-full-size crib mattresses, due to lack of dimensional requirements for rectangular-shaped products, by extending the dimensional requirements in ASTM F2933–19 section 5.7.2 to all non-full-size crib mattresses, regardless of mattress shape, and regardless of whether the mattress is sold with a non-full-size crib or as an after-market mattress; (4) laceration hazards associated with coils and springs breaking and poking through mattresses, by adding a cyclic impact test for mattresses that use coils and springs; and (5) the risks of SIDS and suffocation related to infant positioning, soft bedding, and gap entrapment, by improving the labeling and instructional literature requirements to communicate risks better to consumers, and to clarify requirements for manufacturers and test labs.

The Commission also proposes to amend the consumer registration rule, part 1130, to identify ''crib mattresses'' as a category of ''durable infant or toddler products'' subject to the rule. Finally, the Commission proposes to amend its regulation at 16 CFR part 1112 to add ''crib mattresses'' to the list of products that require third-party testing as a basis for certification.

This NPR is based on information provided in the September 30, 2020, Staff Briefing Package: Draft Notice of Proposed Rulemaking for Crib Mattresses[5] Under the Danny Keysar Child Product Safety Notification Act (Staff's NPR Briefing Package), available at: *https://www.cpsc.gov/s3fs-public/Notice-of-Proposed-Rulemaking-Safety-Standard-for-Crib-Mattresses.pdf?mDLf.MBLutFluwt6QFjeZRhYdNLFRR.J.*

[3] Previously, on November 21, 2016, the Commission issued a notice of proposed rulemaking for a Safety Standard for Portable Generators, proposing to codify the standard at 16 CFR part 1241. 81 FR 83556. The Commission is reusing part 1241 for this proposed rule for a Safety Standard for Crib Mattresses, to keep all regulations for durable infant or toddler products in one section of the Code of Federal Regulations (CFR). The Commission intends to renumber the CFR citation for portable generators when that rulemaking is finalized.

[4] ASTM International website: *www.astm.org,* About ASTM International.

[5] As well as supplemental and after-market mattresses used in play yards and portable cribs.

II. Product Description

A. Scope of Products Within the NPR [6]

The scope of the NPR includes all crib mattresses [7] within the scope of ASTM F2933–19, which addresses three types of crib mattresses:

1. Full-size crib mattresses—Full-size crib mattresses within the scope the proposed rule are typically sold separately from the crib in which they are intended to be used. Industry refers to full-size crib mattresses as a ''standard'' crib mattress. Full-size crib mattresses are also used for toddler beds, meaning that one full-size crib mattress may be used from birth through the toddler years. The fit of a crib mattress inside of a crib is key to preventing infants from becoming trapped between the side of the crib and the mattress, and suffocating. Accordingly, section 5.7 of ASTM F2933–19 requires that the dimensions of a full-size crib mattress shall measure at least 27¼ in. wide and 51⅝ in. long. The interior dimensions of full-size cribs are 28 ± ⅝ in. (710 ± 16 mm) wide and 52⅜ ± ⅝ in. (1330 ± 16 mm) long. Full-size crib mattresses come in a variety of designs and are made of a broad array of materials. Full-size crib mattresses typically have a fabric or vinyl ticking, which covers inner-spring coils or foam. Inner-spring mattresses often have a layer of foam or batting between the springs and the ticking.

2. Non-full-size crib mattresses—Non-full-size cribs are cribs that differ in dimension or shape from ''standard'' full-size cribs. The NPR addresses all non-full-size crib mattresses, regardless of whether they are sold separately (after-market), or are sold with a non-full-size crib (referred to as original equipment manufactured mattresses or OEM mattresses), and regardless of whether they are rectangular or non-rectangular in shape.[8] Because non-full-size cribs do not come in a standard size, non-full-size crib mattresses do not have defined dimensions. Rather, ASTM F2933–19 sets a minimum effective crib-side height for non-full-size cribs and a maximum gap between the mattress edge and the crib side.[9] Section 5.7.2.1 of ASTM F2933–19 requires that the dimensions of a mattress supplied with a non-full-size baby crib shall be such that the mattress, when inserted in the center of the crib, in a non-compressed state, shall not leave a gap of more than ½ in. at any point between the perimeter of the mattress and the perimeter of the crib. Currently, section 5.9 of ASTM F2933–19 requires that after-market, non-rectangular, non-full-size crib mattresses be identical to the OEM non-full-size crib mattresses they are intended to replace, but only requires warning labels regarding dimensions on after-market, rectangular-shaped, non-full-size crib mattresses. The Commission proposes in the NPR to extend this dimensional requirement to all after-market, non-full-size cribs, including non-rectangular and rectangular, non-full-size mattresses.

3. After-market mattresses for play yards—After-market mattresses are products sold separately from a play yard,[3] and that are not sold by the OEM as a replacement mattress for their product. Pursuant to CPSC's mandatory rule for play yards, part 1221, which incorporates by reference ASTM F406–19, *Standard Consumer Safety Specification for Non-Full-Size Baby Cribs/Play Yards* (ASTM F406), all play yards must be sold with a mattress that is specifically designed to fit that product. Part 1221 regulates OEM play yard mattresses, but does not address after-market play yard mattresses. This Commission proposes in the NPR to address after-market mattresses for play yards, as set forth in ASTM F2933–19 section 5.9, by requiring that they meet the same specifications and performance requirements for OEM play yard mattresses. Additionally, the NPR would require that after-market mattresses intended for use in the bassinet of a play yard with a bassinet attachment must also meet the specifications in ASTM F2194, *Consumer Safety Specifications for Bassinets and Cradles.*

B. Market Description [10]

Crib mattresses are designed to be used with infant sleep products, such as full-size cribs, non-full-size cribs, bassinets and cradles, and play yards, to provide sleeping accommodations for an infant. According to estimates published by Statista-Grand View Research, the size of the U.S. market for standard and portable cribs was $86.8 million in 2018.[11] According to data collected by staff, approximately 75 percent of crib mattresses available for sale in the United States are standard (full-size) crib mattresses, and 7 percent are mini crib mattresses.

Crib mattresses range in price from $20 to $500, with the more expensive crib mattresses typically being full-size crib mattresses with a firm coil or high-end foam core. Crib mattresses are sometimes also sold with waterproof covers and fitted sheets, specifically designed to be used with the mattress. While some manufacturers produce a large variety of crib mattress models, others produce only a small selection. Many crib mattresses are GreenGuard Certified, which is a UL-sponsored standard intended to reduce the emissions of volatile organic compounds from products.[12] Additionally, many full-size crib mattresses are advertised online as meeting the CPSC mattress and mattress pad flammability requirements.[13]

If finalized, a mandatory rule for crib mattresses will require third party testing for conformance to the new crib mattress rule, 16 CFR part 1241, and a certificate of compliance. Crib mattresses already require third party testing and certification, because crib mattresses are already defined as ''children's products,'' and are currently subject to various other federal safety rules, such as mattress flammability, lead, and phthalate testing. Accordingly, a final rule for crib mattresses will incrementally increase the amount of crib mattress testing and certification requirements already in place.

C. Crib Mattress Use [11]

Based on information from the 2013 CPSC Durable Nursery Products Exposure Survey (DNPES) of U.S. households with children under 6 years old, an estimated 9.2 million cribs were in use in households with young

[6] *See* Staff's NPR Briefing Package at Tab B for additional information on the scope of ASTM F2933–19.

[7] Section 3.1.4 of ASTM F2933–19 defines a ''crib'' as a ''bed that is designed to provide sleeping accommodations for an infant which have specific interior dimensions as determined by it being either a full size or non-full size crib.'' Section 3.1.5 of ASTM F2933–19 defines a ''mattress'' as ''ticking filled with a resilient material used alone or in combination with other products intended or promoted for sleeping on it.''

[8] We note that OEM non-full-size crib mattresses are also addressed in the Commission's mandatory rule for non-full-size cribs, 16 CFR part 1220, which incorporates by reference ASTM F406. The requirements in F406 for OEM non-full-size crib mattresses are the same requirements that appear in ASTM F2933 section 5.7.

[9] The most common rectangular, non-full-size crib mattress available for sale in the U.S. crib mattress market is the ''mini'' crib mattress. The mini crib mattress is smaller than the so-called ''standard'' or full-size crib mattress. The typical size of a ''mini'' crib mattress is 24″ wide and 38″ long. The depth of a ''mini'' crib mattress varies, but typically ranges from 1″ to 6″.

[10] *See* Staff's NPR Briefing Package at Tab F for additional information on the marketing and use of crib mattresses.

[11] November 2019 Statista estimates, Grand View Research.

[12] *https://www.ul.com/resources/ul-greenguard-certification-program.*

[13] Review of manufacturers' websites, product labels, and materials.

children in 2013.[14] This represented about 73 percent of the estimated 12.6 million total cribs owned by households (*i.e.,* about 3.4 million cribs were owned, but not in use). Cribs, for the purposes of the DNPES, included both full-size and non-full-size cribs, which are designed to be used with a crib mattress; therefore, staff estimates at least 9.2 million (full-size and non-full-size) crib mattresses were in use in 2013.[15] According to DNPES results, 84 percent of respondents indicated they used a fitted sheet on the crib mattresses, and 50 percent indicated they used a mattress pad. Six percent of respondents indicated that nothing was placed under the child in the crib, other than the intended mattress, indicating that the crib mattress was used bare.

According to the same survey, an estimated 5.8 million play yards were in use in households with young children. This represented about 54 percent of the estimated 10.9 million total play yards owned by households (*i.e.,* about 5.1 million play yards were owned, but not in use). Most play yards are designed to be used with a play yard mattress; therefore, staff estimates at least 5.8 million play yard mattresses were in use in 2013. Twenty-five percent of respondents indicated that nothing was placed under the child in the play yard, other than the intended mattress; 12 percent indicated they used a mattress pad, but no respondents indicated that they used a fitted sheet.

The DNPES did not cover child care facilities. One childcare industry group's 2018 directory [16] lists more than 115,000 licensed childcare centers and more than 137,000 home daycare providers, some of which may use crib or play yard mattresses. Furthermore, the survey did not cover hotels or other commercial lodging establishments. The U.S. Bureau of Labor Statistics (BLS) reports that there are about 70,000 lodging establishments in the accommodation industry sector, North American Industry Classification System (NAICS) code 721.[17] Based on the Commission's contacts with childcare and lodging facilities, crib, play yard, and crib mattresses are commonly used in such establishments.[18]

III. Incident Data and Hazard Patterns [19]

Staff of CPSC's Directorate for Epidemiology, Division of Hazard Analysis (EPHA), searched the Consumer Product Safety Risk Management System [20] (CPSRMS) and the National Electronic Injury Surveillance System (NEISS) for fatalities, incidents, and concerns associated with crib mattresses, reported to have occurred between January 1, 2010 and March 31, 2020.[21] Staff identified 21 NEISS cases associated with a crib mattress. Because the data did not meet the minimum criteria for reporting an estimate,[22] staff included the 19 NEISS injuries and two NEISS fatalities with the other reported incident data for crib mattresses.

A. Incident Severity

The Commission is aware of 439 reports associated with a crib mattress. Table 1 presents the severity of the reported cases, in order of severity. Of the 439 reports, 116 reports (26 percent) involved a fatality; 15 reports (3 percent) required an infant to receive treatment in an emergency room; and 4 reports (1 percent) required hospital admission. Reports for 199 incidents (45 percent) describe incidents that resulted in no injuries; and 16 reports (4 percent) describe no actual incidents or injuries. In the 199 incident reports with no injuries reported, staff observed that, generally, caregivers intervened once they identified a problem with the crib mattress, and the mattress was no longer used after the caregiver identified the hazard.

TABLE 1—REPORTS ASSOCIATED WITH CRIB MATTRESSES BY SEVERITY, JANUARY 1, 2010–MARCH 31, 2020

Severity	Number of reports	%
Fatalities	116	26
Emergency Department Treatment Received	15	3
Hospital Admission	4	1
Seen by Medical Professional	1	<1
First Aid Received by Non-Medical Professional	1	<1
Level of care not known	66	15
Incident, No Injury	199	45
No First Aid or Medical Attention Received	8	2
No Incident, No Injury	16	4
Unspecified	13	3
Total	439	100

Source: CPSRMS and NEISS databases—Reporting is ongoing; 2018–2020 are considered incomplete.

[14] Respondents were asked to include in their count of cribs owned, cribs that had been converted into toddler beds; but they were instructed to include only the time used in the product *as a crib,* in response to use questions.

[15] In addition to the products in use in households with young children, as estimated from the survey, cribs and crib mattresses are probably in use in some households without young children (*e.g.,* unsurveyed homes of older adults providing care for grandchildren).

[16] Child Care Centers estimate entire U.S. (2018, April 27). *http://childcarecener.us/.*

[17] U.S. Bureau of Labor Statistics, ''Quarterly Census of Employment and Wages,'' April 2018. *http://www.bls.gov/iag/tgs/iag721.htm.*

[18] Staff contacts included phone inquiries with daycare and hotel establishments.

[19] *See* Staff's NPR Briefing Package at Tab A, for additional information on staff's review of crib mattress incidents.

[20] CPSRMS is the epidemiological database that houses all anecdotal reports of incidents received by CPSC, ''external cause''-based death certificates purchased by CPSC, all in-depth investigations of these anecdotal reports, as well as investigations of select NEISS injuries. Examples of documents in CPSRMS are: Hotline reports, internet reports, news reports, medical examiner's reports, death certificates, retailer/manufacturer reports, and documents sent by state/local authorities, among others.

[21] Some of the nonfatal reports described concerns about potential hazards associated with a crib mattress, without an actual incident occurring. Staff initially extracted incident reports and NEISS injury cases using nine product codes, with no other restrictions on the extraction criteria. Staff then reviewed each record to determine whether a report was associated with a crib mattress. Staff searched the following product codes: *Playpens and play yards* (1513), *portable cribs* (1529), *bassinets or cradles* (1537), *baby mattresses or pads* (1542), *cribs, nonportable* (1543), *cribs, not specified* (1545), *mattresses, not specified* (4010*), toddler beds* (4082), and a catch-all product code 9101.

[22] NEISS estimates are reportable, provided the sample count is greater than 20, the national estimate is 1,200 or greater, and the coefficient of variation (CV) is less than 0.33.

B. Hazard Categories for Fatal and Nonfatal Reports

The Commission is aware of 116 reported deaths and 323 nonfatal incidents and concerns associated with crib mattresses that were reported to have occurred between January 1, 2010 and March 31, 2020. Table 2 presents hazard categories, which are further defined in the *Fatal Reports* and *Reported Nonfatal Incidents and Concerns* sections below.

TABLE 2—FATAL AND NONFATAL REPORTS ASSOCIATED WITH CRIB MATTRESSES BY HAZARD CATEGORY, JANUARY 1, 2010–MARCH 31, 2020

Hazard category	Fatal reports	Nonfatal reports	Total reports
Chemical/Flammability	0	23	23
Coil or Spring	0	124	124
Crib Mattress Used in a Play Yard	2	1	3
Expand or Inflate	0	6	6
Face in Mattress	13	1	14
Fit Issues	20	88	108
Found Prone	66	3	69
Mattress Falls Apart	0	18	18
Softness	0	36	36
Multiple Contributing Factors (MCF)	15	17	32
Other	0	6	6
Total	116	323	439

Source: CPSRMS and NEISS databases—Reporting is ongoing; 2018–2020 are considered incomplete.

C. Fatal Reports

The Commission is aware of 116 reported deaths associated with crib mattresses that were reported to have occurred between January 1, 2010 and March 31, 2020. Table 3 presents hazard categories associated with fatalities.

TABLE 3—REPORTED FATALITIES ASSOCIATED WITH CRIB MATTRESSES BY HAZARD CATEGORY, JANUARY 1, 2010–MARCH 31, 2020

Hazard category	Reported deaths	%
Crib Mattress Used in a Play Yard	2	2
Face in Mattress	13	11
Fit Issues	20	17
Found Prone	66	57
Multiple Contributing Factors (MCF)	15	13
Total	116	100

Source: CPSRMS and NEISS databases—Reporting is ongoing; 2018–2020 are considered incomplete.

1. *Crib Mattress Used in a Play Yard:* Two percent of the fatalities involved use of a crib mattress in a play yard (2 out of 116). Reports state that infants were found wedged between the crib mattress and the mesh of the play yard, due to the crib mattress not fitting snugly in the play yard.

2. *Face in Mattress:* Eleven percent (13 out of 116) of fatalities were associated with the face of an infant, when found, reportedly in contact with a crib mattress or crib sheet covering the crib mattress. Based on the available information about each fatality, bedding, other than a sheet, was present in the sleeping environment in some of these reports, but the bedding was not touching the infant, nor did staff determine that the bedding was a contributing factor in the death.

3. *Fit Issues:* Seventeen percent (20 out of 116) of fatalities involved issues with the fit of a crib mattress in the sleeping environment. In all of these fatalities, the infants became wedged in gaps between at least one of the sides of a crib mattress and the crib rails or play yard mesh.

4. *Found Prone:* Fifty-seven percent (66 out of 116) of fatalities involved an infant found in a prone position with no mention of whether the face of the child was in contact with the crib mattress or crib sheet, and no mention of the face being obstructed by other crib bedding, or other items in the sleep environment. Given the available information about each fatality, bedding was present in the sleeping environment in some of these reports, but staff did not determine that bedding was a contributing factor in the deaths.

5. *Multiple Contributing Factors (MCF):* Thirteen percent (15 out of 116) of fatalities involved multiple factors that potentially played a role in the fatality, and the crib mattress was likely one of the contributing factors. Examples of other contributing factors are entrapment between the mattress and bumper pads, entrapment between the mattress and a crib rail with limb entrapment, usage of a swaddle, sharing of the sleep environment with another infant, and congenital or recent health conditions.

CPSC staff identified the age and gender of the infant in every reported fatality. The oldest-aged children associated with crib mattress fatalities were: One 3-year-old, and two 2-year-old children. Staff observed considerably more reported prone fatalities between the ages of 1 month and 5 months, and most of the deaths in the fit, face in mattress, and MCF hazard categories involved infants between the ages of 1 month and 8

months, compared to other ages. Of the 116 reported fatalities associated with crib mattresses, 74 deaths (64 percent) were male and 42 deaths (36 percent) were female.

D. Nonfatal Reports and Concerns

The Commission is aware of 323 reported nonfatal incidents and concerns associated with crib mattresses that were reported to have occurred between January 1, 2010 and March 31, 2020. Table 4 presents the hazard categories associated with nonfatal crib mattress reports.

TABLE 4—NONFATAL REPORTS ASSOCIATED WITH CRIB MATTRESSES BY HAZARD CATEGORY, JANUARY 1, 2010–MARCH 31, 2020

Hazard category	Nonfatal reports	%
Chemical/Flammability	23	7
Coil or Spring	124	38
Crib Mattress Used in a Play Yard	1	<1
Expand or Inflate	6	2
Face in Mattress	1	<1
Fit Issues	88	27
Found Prone	3	1
Mattress Falls Apart	18	6
Softness	36	11
Multiple Contributing Factors (MCF)	17	5
Other	6	2
Total	323	100

Source: CPSRMS and NEISS databases—Reporting is ongoing; 2018–2020 are considered incomplete.

As shown in Table 4, the hazard categories with the most reported nonfatal incidents associated with crib mattresses are issues with coils or springs, and crib mattresses that do not fit properly in the sleep environment.[23] We describe the non-fatal incidents associated with each identified hazard category as follows:

1. *Chemical/Flammability:* Seven percent (23 out of 323) of the nonfatal incidents reported a crib mattress having a chemical odor (5), causing rashes (7), or not meeting mandatory federal flammability standards (11). Infants were reported to have suffered from rashes and upper respiratory issues.

2. *Coil or Spring:* Thirty-eight percent (124 out of 323) of nonfatal incidents involved a coil or spring found protruding through the crib mattress. A 2-year-old received two stitches in the hospital emergency department for a laceration injury. Another 2-year-old with a toe laceration was treated and released from the hospital emergency department.

3. *Crib Mattress Used in a Play Yard:* Less than 1 percent (1 out of 323) of nonfatal incidents involved an infant's back being scratched by protruding coils or springs of a crib mattress being used in a play yard.

4. *Expand or Inflate:* Two percent (6 out of 323) of nonfatal incidents involved a crib mattress that failed to expand or inflate properly. Staff identified related hazards, including fit issues with gaps appearing around the crib mattress causing entrapment or wedging, and an uneven crib mattress that may cause an infant to roll over.

5. *Face in Mattress:* Less than 1 percent (1 out of 323) of nonfatal incidents involved an infant found limp, pale, and with blue around the lips while face down in contact with a crib mattress. Staff found no other details about the sleep environment in this incident. The 1-month-old infant was admitted to the hospital.

6. *Fit Issue:* Twenty-seven percent (88 out of 323) of nonfatal incidents involved issues with the fit of a crib mattress in the sleeping environment. In all of these reports, staff determined that gaps were present on one or more sides around the perimeter of a crib mattress, creating wedging or entrapment hazard between the crib mattress and the crib rails or play yard mesh. A 3-month-old went into cardiac arrest and was admitted to the hospital after being found between a crib mattress and a crib frame. Six children between the ages of 6 months old and 2 years old, and a 10-year-old with Rett syndrome,[24] were treated and released from the hospital emergency department due to entrapment between a crib mattress and crib rails, and sustaining injuries, such as an arm or leg fracture, a mid-back injury, a foot injury, lip hematoma, and a nursemaid's elbow.

7. *Found Prone:* One percent (3 out of 323) of nonfatal incidents involved an infant found in a prone position without any mention of the face being in contact with the mattress or crib sheet, and no mention of the face being obstructed by other crib bedding or other items in the sleep environment. Staff found no other details about the sleep environment in any of these three reported incidents. Among these three infants, an 8-month-old was admitted to the hospital after being found breathing poorly; and two infants received treatment in the emergency department: A 4-month-old was found breathing poorly, and a 1-month-old was found not breathing, while vomiting and choking.

8. *Mattress Falls Apart:* Six percent (18 out of 323) of nonfatal incidents involved part of a crib mattress coming apart. In most of these reports, the seams of the mattress unraveled, creating: A strangulation hazard due to the stitching of the mattress being exposed; and a choking or ingestion hazard due to the inner filling coming out of the mattress in small pieces and into the sleep environment. Examples of reported small pieces of a crib mattress filling that came apart are fibers, string, or wool. Staff found that in six incidents, string from crib mattress seams or piping was found wrapped around the neck of the infant, which

[23] In the most recent 2 years, from January 2018 to March 2020, CPSC observed fewer nonfatal reports of coil or spring issues associated with crib mattresses, compared to years 2014 through 2017. Eighty-nine percent (78 out of 88 nonfatal reports) of nonfatal reports involving fit issues occurred between 2010 and 2015.

[24] According to *https://www.rettsyndrome.org,* ''Rett syndrome is a rare genetic neurological disorder that occurs almost exclusively in girls and leads to severe impairments, affecting nearly every aspect of the child's life: Their ability to speak, walk, eat, and even breathe easily. The hallmark of Rett syndrome is near-constant repetitive hand movements. Rett syndrome is usually recognized in children between 6 to 18 months as they begin to miss developmental milestones or lose abilities they had gained.''

could have led to a serious outcome if the child was not found in time. One incident involved an infant choking on a plastic piece of 'shredded' crib mattress, and 1 incident involved a 2-year-old who was treated and released from the hospital emergency department due to ingesting plastic pieces of a crib mattress.

9. *Softness:* Eleven percent (36 out of 323) of nonfatal incidents involved a crib mattress inner cushioning that was reportedly too soft. Staff found 17 reports of depressions or indentations in the crib mattress, accompanied by the following descriptions: ''bunches up/squishy,'' ''depression/dips/indentation/sinks in/sunken,'' and ''deflates/like an air mattress not fully inflated.'' Twelve reports describe a crib sheet being placed on a crib mattress and causing the mattress to bend or bow, resulting in a gap or fit issue between the mattress and crib rails, creating an entrapment hazard. Four reports claim that a crib mattress is not breathable. Three reports allege that a crib mattress is too thin and that the inner cushioning is too soft.

10. *Multiple Contributing Factors (MCF):* Five percent (17 out of 323) of nonfatal incidents involved multiple factors that played a role, of which the crib mattress was likely one factor. Staff found that in 10 reports, an infant was found wedged between a crib mattress and the crib rail, while an arm, leg, or foot was caught in between the slats of the crib. Additionally, one infant in a sleep sack was found face down while reportedly attempting to turn over, and another child was found face down in a crib while having a seizure. Among the most serious injuries reported were two children who were treated and released from the hospital emergency department: A 5-month-old received a leg fracture after becoming entrapped under a crib mattress while also having an arm caught between the slats of the crib, and an 18-month-old was found face down on a crib mattress while having a seizure.

11. *Other:* Two percent (6 out of 323) of nonfatal incidents involved miscellaneous other issues associated with a crib mattress. Reports in this category include: A blade found in a crib mattress; an infant's arm was ''tangled in a crib mattress''; an infant ''slipped on a crib mattress,'' causing a slat entrapment; an infant's arm became ''stuck on a crib mattress''; a crib mattress had a loose plastic bag for a cover; and a concern about crib mattresses not having proper warning labels to direct caregivers to place infants on their backs when putting them down in a crib. The 7-month-old infant who was ''tangled in a crib mattress'' was admitted to the hospital due to a leg fracture. The 9-month-old who was ''stuck on a crib mattress'' was treated and released from the hospital emergency department due to a nursemaid's elbow.

E. Explanation of Hazards Associated With Crib Mattress Use [25]

After reviewing the incident data, CPSC staff identified various mattress-use factors associated with deaths and serious injuries related to sudden and unexpected infant death (SUID), including, but not limited to, prone positioning of sleeping infants, soft bedding added to sleep areas, and gaps/pockets between mattresses and infant product sides.[26] [27] [28] Physiologically, infants experiencing a compromised airflow are likely to undergo a cycle of decreased heart and respiration rate, resulting eventually in fatal cessation of breathing. Numerous public awareness campaigns have aimed to educate caregivers regarding the identified hazards; these campaigns include: ''Back to Sleep'' (Moon *et al.,* 2016, as cited in Fors Marsh Group, 2019), the ''ABC's of safe sleep'' (alone (no bed sharing), back-sleeping, and crib uncluttered),[29] and ''Safe Sleep/Bare is Best.'' [30] [31] Health and safety advocates, including the AAP, CDC,[32] CPSC, and Kids in Danger (KID) [33] support these efforts.

To make infant sleep environments more comfortable, caregivers commonly use soft bedding and after-market mattresses, instead of, or in addition to, an OEM mattress. Infants can maneuver themselves into vulnerable positions in a sleep environment, from which they cannot free themselves:

> Infants in the age range associated with fatal incidents, *i.e.,* between 2 and 6 months, develop new skills, such as rolling over and crawling, in stages. According to Bayley (1969), several developmental milestones occur within the first 6 months of life; some notable motor skills typically achieved are turning from side to back (average age: 1.8 months old), turning from back to side (average age: 4.4 months old), and turning from back to stomach (average age: 6.4 months old). Children as young as 8 to 12 weeks are likely to move around a play yard, including moving to the edge and possibly moving into vulnerable situations. However, children may not be able to remove themselves by reversing their actions because they may not have developed the skill.[34]

Infants can become trapped in a gap between a crib mattress and the side wall(s) of their sleep environment, with their nose and mouth pressed against the mattress or side wall, experiencing compromised airflow. Gap entrapment is a hazard associated with ill-fitting mattresses in full-size cribs, play yards, and non-full-size cribs. To minimize the risk for entrapment in a gap, a full-size crib and full-size crib mattress that meet the applicable standards would allow a maximum side gap of 1⅜ inches.[35] Given non-flexible sides and infant head dimensions,[36] requirements in these

[25] Staff's NPR Briefing Package at Tabs C and E contain more detailed analysis of incidents and hazards associated with crib mattress use.

[26] The Centers for Disease Control and Prevention (CDC) defines ''SUID'' as the sudden and unexpected death of a baby less than 1-year-old, in which the cause was not obvious before investigation. See *https://www.cdc.gov/sids/about/index.htm?CDC_AA_refVal=https%3A%2F%2Fwww.cdc.gov%2Fsids%2FAboutSUIDandSIDS.htm;* accessed July 20, 2020.

[27] The American Academy of Pediatrics (AAP, 2016) explains that SUID, also known as ''sudden unexpected death in infancy'' (SUDI), includes explained and unexplained deaths, and it can be attributed to suffocation, asphyxia, entrapment, infection, ingestions, metabolic diseases, arrhythmia-associated cardiac channelopathies, and trauma. See *https://pediatrics.aappublications.org/content/pediatrics/138/5/e20162938.full.pdf;* accessed May 5, 2020.

[28] Sudden infant death syndrome (SIDS) is a subcategory of SUID that refers to infant deaths that cannot be explained after a thorough case investigation. The terms SUID and SIDS are used interchangeably, as SIDS commonly is used to refer to SUID in warning labels and articles and given that consumers are more familiar with the term SIDS as opposed to SUID.

[29] See *https://www.aappublications.org/news/2016/10/24/SIDS102416;* accessed May 7, 2020.

[30] See *https://www.cpsc.gov/Safety-Education/Neighborhood-Safety-Network/Posters/Safe-Sleep-for-Babies;* accessed May 6, 2020.

[31] See *https://www.cpsc.gov/safety-education/safety-guides/kids-and-babies-cribs/safe-sleepbare-best* and *https://www.nationwidechildrens.org/family-resources-education/health-wellness-and-safety-resources/helping-hands/safe-sleep-practices-for-babies;* accessed May 11, 2020.

[32] See *https://www.cdc.gov/vitalsigns/safesleep/index.html;* accessed May 2, 2020.

[33] See *https://kidsindanger.org/protect-your-child/sleep/;* accessed May 6, 2020.

[34] See page 5, *https://www.cpsc.gov/s3fs-public/Petition%20CP%2015-2%20-%20Petition%20Requesting%20Ban%20on%Supplemental%20Mattress%20for%20Play%20Yards%20with%20Non-Rigid%20Sides%20-%20May%2010%20217_3.pdf;* accessed September 14, 2020.

[35] Per 16 CFR part 1219, and by reference ASTM F1169–19, a full-size crib must have interior dimensions of 28 ± ⅝ inches wide by 52⅜ ± ⅝ inches long. Per the existing voluntary standard for crib mattresses, ASTM F2933–19, a full-size crib mattress shall measure at least 27¼ inches wide by 51⅝ inches long by 6 inches thick.

[36] According to Snyder (1975), the 5th percentile head breadth, *i.e.,* the maximum breadth of the head above and behind the ears, of children 0 to 3 months old is approximately 3 3/10 inches, which is more than twice as wide as the maximum allowable side gap between full-size cribs and full-size crib mattresses. ESHF staff selected head ''breadth,'' as opposed to length or height, to err on the side of caution, as head breadth is the smallest of these three head dimensions that could cause a fatal entrapment. Similarly, staff selected the 5th percentile measurement for 0-to-3-month-old

standards work in tandem to help prevent head entrapment and suffocation between the mattress and crib sides, even though a full-size crib manufacturer is not required to provide the mattress.[37] Still, incidents of gap entrapment involving these products continue to occur, including when the full-size crib and *non-compressed* full-size crib mattress measure the appropriate dimensions. For example, gaps involving full-size crib mattresses can develop if the mattresses are too soft, such as when the mattress is compressed by mattress sheets.

Gaps between the infant's mattress and sleep product sides are especially hazardous when after-market mattresses with thicker depth dimensions than the OEM mattress are used in products with flexible (*e.g.,* mesh or fabric) sides, such as play yards and non-rigid-sided portable cribs. The side walls of these products typically expand more towards the center of the side wall, and, consequently, as the thickness of mattresses used in these products increases, the risk of gap entrapment often increases as well.

F. Product Recalls [38]

From June 1, 2010 to June 1, 2020, CPSC negotiated five consumer-level recalls involving crib mattresses to mitigate against risks of flammability and suffocation. Four recalls involved non-compliance with mandatory federal flammability requirements. These four recalls included approximately 80,000 units in total. The Commission cannot provide an exact number of units because of a lack of differentiation between crib and adult mattress populations in recalls that included both. The fifth recall of crib mattresses involved a dimensional issue, where the crib mattress models were ill-fitting, presenting an entrapment hazard. This recall included approximately 300,000 units.

IV. International Standards for Crib Mattresses [39]

The Commission is aware of two international voluntary standards pertaining to crib mattresses: [40]

- BS EN 16890:2017—Children's Furniture—Mattresses for cots and cribs—Safety requirements and test methods (BS EN 16890); and
- Australian/New Zealand Standard 8811.1:2013—Methods of testing infant products (AS/NZS 8811.1).

Table 5 compares each of these international standards to ASTM F2933–19 to assess how each standard addresses the identified hazard patterns and other common hazards. Tab B of Staff's NPR Briefing Package contains a more detailed analysis of the comparison, and how each standard addresses the hazard patterns described in Table 5.

TABLE 5—COMPARISON OF CRIB MATTRESS VOLUNTARY STANDARDS BY HAZARD PATTERN

Hazard pattern	ASTM F2933	AS/NZS 8811.1	EN 16890	Comments
Chemical Hazards	16 CFR part 1303 Ban of Lead-Containing Paint, 16 CFR part 1500 Hazardous Substances Act Regulations.	Not addressed	Provision for specific controlled toxic substances.	ASTM is adequate to address US incident data.
Coil or Spring	Prohibition of sharp points	Not addressed	Prohibition of sharp points	NPR proposes addition of cyclic testing.
Crib Mattress Used in a Play Yard.	Labeling requirements, requirements for after-market mattresses and required testing to ASTM F406 mattress requirements.	Not addressed	Labeling requirements	ASTM more stringent.
Expand or Inflate	Dimensional conformity, mattress thickness, and labeling requirements.	Not addressed	Dimensional conformity, labeling requirements.	ASTM more stringent.
Face in Mattress	Labeling requirements	Firmness test	Firmness test	NPR proposes mattress firmness test based on sections 6 and 8 of AS/NZS 8811.1 firmness test, in addition to label requirements in ASTM F2933–19.
Fit Issues	Dimensional conformity and after-market mattress requirements.	Not addressed	Dimensional conformity, conical probe test, cyclic test.	NPR proposes fitted sheet compression test.
Found Prone	Labeling requirements	Firmness test	Firmness test	NPR proposes mattress firmness test based on sections 6 and 8 of AS/NZS 8811.1 firmness test, in addition to label requirements in ASTM F2933–19.
Mattress Falls Apart	Mattress seam stitching requirement and small parts prohibition.	Not addressed	Mattress seam stitching requirement and small parts prohibition.	ASTM more stringent.
Softness	Not addressed	Firmness test	Firmness test	NPR proposes mattress firmness test based on sections 6 and 8 of AS/NZS 8811.1 firmness test.
Multiple Contributing Factors (MCF).	General requirements and instructional literature.	Not addressed	General requirements and instructional literature.	ASTM General Requirements are adequate but safety info is inadequate.
Small Parts	Prohibited per 16 CFR part 1501	Not addressed	Same as ASTM	ASTM is adequate to address U.S. incident data.
Sharp Points/Edges	Prohibited per 16 CFR 1500	Not addressed	Prohibited but no performance requirements.	ASTM is more stringent.
Flammability	Prohibited per 16 CFR 1632 and 1633	Not addressed	Must comply with EN 71–2:2011 and EN 597–1.	ASTM is adequate to address U.S. incident data.
Small Openings	Openings between 0.210″ and 0.375″ prohibited.	Not addressed	Not addressed	ASTM is adequate and more stringent.

infants to reduce the likelihood of death or serious injury to those most vulnerable to the identified hazards.

[37] See *https://www.cpsc.gov/Business--Manufacturing/Business-Education/Business-Guidance/Full-Size-Baby-Cribs/,* accessed May 1, 2020.

[38] *See* Staff's NPR Briefing Package at Tab D.

[39] *See* Staff's NPR Briefing Package at Tab B.

[40] The Commission is also aware of a draft, unpublished, standard, ISO 23767 *Children's furniture—Mattresses for cots and cribs—Safety requirements and test methods.* Although this draft ISO standard is not yet an official standard, CPSC staff reviewed it for relevancy and found that it is nearly identical to BS EN 16890.

TABLE 5—COMPARISON OF CRIB MATTRESS VOLUNTARY STANDARDS BY HAZARD PATTERN—Continued

Hazard pattern	ASTM F2933	AS/NZS 8811.1	EN 16890	Comments
Label Permanency	Must not detach with <15-lb. pull force	Not addressed	Must not detach after 30 attempts to remove with feeler gauge.	ASTM is adequate and more stringent.
Dimensional Conformity.	Must be at least 27.25″ x 51.625″ during application of forces.	Not addressed	Must be within 10 mm of nominal dimensions.	ASTM is adequate and more stringent.
Entanglement	All accessible stitching must be lock stitching.	Not addressed	Maximum free length of 220 mm	ASTM is adequate to address U.S. incident data.
Seam Stitching	All accessible stitching must be lock stitching.	Not addressed	Seams must not be penetrated >6 mm with 12 mm diameter probe.	ASTM is adequate and more stringent.
After-Market Mattresses.	Mattresses shall have same thickness, floor support structure and attachment method as the mattress it is intended to replace.	Not addressed	Not addressed	ASTM is more stringent; NPR proposes to extend dimension requirements in 5.7.2 to all after-market non-full-size crib mattresses.
Warning Labels/Instructions.	Warning labels required, instructions not required.	Not addressed	Instructions required/warning labels do not address as many hazards.	ASTM is inadequate. See human factors assessment in Tab C of Staff's NPR Briefing Package.

With the exception of mattress firmness, the Commission concludes that ASTM F2933–19 is equivalent to, or more stringent than, AS/NZS 8811.1 or EN 16890 because it more fully addresses the hazard patterns identified by CPSC staff in the reported incident data. Compared to these international standards, ASTM F2933–19 is more comprehensive because it also addresses non-full-size crib mattresses and after-market mattresses for play yards and non-full-size cribs. Furthermore, the Commission notes that ASTM F2933–19 was developed through collaboration between CPSC staff and stakeholders, and has been revised three times in the attempt to address incident data provided by CPSC staff. Therefore, the Commission concludes that ASTM F2933–19, when modified to include a test for mattress firmness based on sections 6 and 8 of AS/NZS 8811.1:2013, is more appropriate than AS/NZS 8811.1:2013 or EN 16890 to address hazard patterns associated with crib mattresses.

V. Voluntary Standard—ASTM F2933 [41]

A. History of ASTM F2933

The ASTM Committee F15 on Consumer Products first published the voluntary standard for crib mattresses in 2013, as ASTM F2933–13, *Standard Consumer Safety Specification for Crib Mattresses.* The first publication established requirements for the standard and addressed the following issues:

- Sharp points and sharp edges,[42]
- Small parts,
- Lead and other toxic substances in paints,
- Finger entrapment,
- Mattress dimension conformity,
- Mattress thickness, and
- Marking and labeling.

Since 2013, ASTM has revised and updated the voluntary standard three times to address safety issues, as outlined below:

ASTM F2933–16 (approved 12/1/2016):

- Revised warning label permanency requirements in 5.6.1, to include requirement that ''[n]on-coated paper warning label shall not be applied on either side of sleeping surface.'' Added a note under this section, stating that non-coated paper label may absorb water and can deteriorate.

ASTM F2933–18 (approved 8/15/2018):

- Revised scope to include a new section 1.5, stating the standard was developed in accordance with internationally recognized principles on standardization.
- Added definition of ''after-market mattress for play yard or non-full-size crib,'' to section 3, Terminology.
- Added a new requirement for after-market mattresses for play yards and non-full-size crib mattresses in section 5, General Requirements, stating that after-market mattresses for soft-sided and non-rectangular, rigid-sided products shall have the same thickness, floor support structure, and attachment method as the mattress it is intended to replace and shall meet the specifications of Mattress Vertical Displacement test from ASTM F406–19, *Standard Consumer Safety Specification for Non-Full-Size Baby Cribs/Play Yards.*
- Added additional marking and labeling requirements for after-market mattresses in sections 7.5 through 7.7. To comply with these sections, after-market mattresses and their retail packaging shall include specified suffocation warning language related to hazardous gaps and stacked mattresses. Sections 7.5 and 7.6 have additional requirements that distinguish between types of products. Section 7.5 has requirements specific to mesh/fabric-sided and rigid-sided, non-rectangular products, including as follows: After-market mattresses shall have all the warnings that the original manufacturer had and provide instructions that are on the original mattress, and both the after-market mattress and the retail packaging shall identify the brand and model numbers of products in which it is intended to be used. Section 7.6 contains requirements specific to rigid sided rectangular products including as follows: After-market mattresses and their retail packaging shall have a specified statement regarding mattress dimensions and fit.

ASTM F2933–19 (approved 6/15/2019):

- Added a new requirement for mattress seam stitching in section 5, General Requirements, requiring that all seam stitching that is accessible to the occupant be lock stitching.

B. Description of Performance Requirements in ASTM F2933–19

In addition to the general requirements typically found in other ASTM juvenile product standards, such as requirements for openings, label permanency, and the prohibition of sharp points/edges, small parts, and lead in paints, section 5 of ASTM F2933–19 contains the following four additional requirements that apply specifically to mattresses for cribs, non-full-size-cribs, and to after-market mattresses for non-full-size cribs and play yards:

- *§ 5.7 Mattress Dimensions:* Describes the dimensional requirements for full-size mattresses and OEM non-full-size crib mattresses, to prevent an infant from becoming wedged in a gap caused by a too small crib mattress. To ensure the crib mattress dimensions are within the allowable range, the test requires a mattress to be placed in a test box and pushed against the side of the

[41] *See* Staff's NPR Briefing Package at Tab B for additional information about the history and performance requirements in ASTM F2933–19.

[42] Tapered ends that do not meet the requirements of 16 CFR 1500.48 and metal or glass tapered surfaces that do not meet the requirements of 16 CFR 1500.49.

box with a force prescribed in the test method.

• *§ 5.7.2.2 Mattress Thickness:* Applies to OEM non-full-size crib mattresses, to prevent occupants from falling out of the product. The requirement states that a mattress supplied with a non-full-size crib shall have a thickness that will provide a minimum effective crib-side height dimension of at least 20 inches when the crib side is in its highest adjustable position and the mattress support is in its lowest adjustable position. Additionally, the mattress shall have a thickness that will provide a minimum effective crib-side height dimension of at least 3 inches when the crib side is in its lowest adjustable position, and the mattress support is in its highest adjustable position.

• *§ 5.8 Mattress Seam Stitching:* Applies to all crib mattresses within the scope of the standard, and requires that all seam stitching that is accessible to the occupant be lock stitching to prevent accessible stitching from becoming loose and creating a small part or strangulation hazard.

• *§ 5.9 After-Market Mattress for Play Yards and Non-Full-Size Cribs:* Applies to after-market mattresses for play yards and non-full-size cribs, and requires that mesh/fabric sided products, and rigid sided non-rectangular products, must have the same thickness, floor support structure, and attachment method as the mattress it is intended to replace. Accordingly, after-market mattresses for play yards and non-rectangular rigid sided products must be identical to the OEM mattress.[43] After-market mattresses must also meet the Mattress Vertical Displacement test in ASTM F406.[44] Finally, section 5.9.1.3 requires ''replacement'' mattresses intended to be used in the bassinet of a play yard with a bassinet attachment to meet the requirements of ASTM F2194, when tested with each brand and model the mattress is intended to replace.

VI. Assessment of the Voluntary Standard ASTM F2933–19

A. Adequacy of Performance Requirements[45]

ASTM developed ASTM F2933 to mitigate the risk of injury associated with the use of crib mattresses. Hazard mitigation strategies include performance requirements and instructions and on-product warnings to help inform caretakers of the primary hazards during use of the product. Based on CPSC staff's Engineering, Human Factors, and Health Sciences assessments, Tabs B, C, and E of Staff's NPR Briefing Package, respectively, the requirements in the current voluntary standard, ASTM F2933–19, adequately address the hazard patterns related to expanding or inflating crib mattresses, mattresses falling apart, and most hazards associated with multiple contributing factors, or other hazards. However, ASTM F2933–19 does not adequately address the most prevalent or severe identified hazards associated with the use of crib mattresses, such as coil spring issues, face in mattress, fit issues, found prone, and softness. The warning labeling for factors within multiple contributing factors (such as, face in mattress, found prone, and softness) are also inadequate. Accordingly, the Commission proposes additional requirements in the NPR to make the standard more stringent, to further reduce the risks of death and injury from these hazard patterns. Table 6 summarizes CPSC's assessment of the adequacy of ASTM F2933–19 to address the identified hazard patterns.

TABLE 6—ADEQUACY OF ASTM F2933–19 IN ADDRESSING IDENTIFIED HAZARD PATTERNS

Identified hazard pattern (potential injury)	Applicable mattresses	How addressed in ASTM F2933–19	Adequacy	Comments
Chemical/Flammability Hazards (odors, rash).	All	16 CFR part 1303—Lead-Containing Paint; 16 CFR part 1500—Hazardous Substances Act Regulations (Sections 5.1 and 5.4); 16 CFR part 1632—Flammability of Mattresses and Mattress Pads; 16 CFR part 1633—Flammability (Open Flame) of Mattress Sets.	Adequate	Staff's NPR Briefing Package (SBP) Tab B.
Coil or Spring (laceration)	Coil or spring mattresses (primarily full-size).	Prohibition of sharp points (Section 5.2).	Inadequate	Propose additional cyclic testing to identify potential for springs to break through surface during foreseeable use and misuse. SBP Tab B.
Crib Mattress Used in a Play Yard (suffocation due to ill-fitting mattress).	Aftermarket play yard mattresses.	Labeling requirements, requirements for after-market mattresses. Testing requirements harmonized with ASTM F406. (Section 7.5).	Adequate	SBP Tabs B & C.
Expand or Inflate (suffocation due to ill-fitting mattress that does not expand or inflate properly).	Foam products, typically full-size and shipped as ''bed in a box''.	Dimensional conformity, mattress thickness, and labeling requirements (Section 5.7).	Adequate	SBP Tab B.
Face in Mattress (suffocation)	All	Labeling requirements (Section 7.3)	Inadequate	NPR proposes a test based on sections 6 and 8 of AS/NZS 8811.1 firmness test. SBP Tabs B & C.
Fit Issues (suffocation due to ill-fitting mattress).	All	Dimensional conformity and after-market mattress requirements (Sections 5.7 and 5.9).	Inadequate	NPR proposes additional fitted sheet compression test for full-size crib mattresses and extending dimensional requirements in section 5.7 to all after-market, non-full-size crib mattresses. SBP Tab B.

[43] Requirements for OEM mattresses sold with play yards and non-full-size cribs are codified at 16 CFR parts 1220 (non-full-size cribs) and 1221 (play yards), which incorporate by reference ASTM F406, *Standard Consumer Safety Specification for Non-Full-Size Baby Cribs/Play Yards* (ASTM F406).

[44] The purpose of requiring after-market mattresses to be identical to OEM mattresses is to reduce the risk of infant entrapment and suffocation associated with after-market mattresses that are too thick, or that do not fit correctly or attach to a play yard or non-full-size crib. ASTM developed this requirement in collaboration with CPSC staff and the ASTM Play Yard Vertical Displacement Task Group and the Play Yard Mattress Fit and Thickness Task Group.

[45] Staff's NPR Briefing Package at Tab B contains additional details on the CPSC staff's analysis of ASTM F2933–19 and its ability to address identified hazards.

TABLE 6—ADEQUACY OF ASTM F2933–19 IN ADDRESSING IDENTIFIED HAZARD PATTERNS—Continued

Identified hazard pattern (potential injury)	Applicable mattresses	How addressed in ASTM F2933–19	Adequacy	Comments
Found Prone (suffocation due to prone position).	All	Labeling requirements (Section 7.3)	Inadequate	Propose additional mattress firmness test based on sections 6 and 8 of AS/NZS 8811.1 and strengthening warning label requirements. SBP Tabs B & C.
Mattress Falls Apart (choking/ingestion)	All	Mattress seam stitching requirement and small parts prohibition (Sections 5.3 and 5.8).	Adequate	SBP Tab B.
Softness (suffocation due to soft surface).	All	Not addressed	Inadequate	Propose additional mattress firmness test based on sections 6 and 8 of AS/NZS 8811.1 firmness test. SBP Tab B.
Multiple Contributing Factors (MCFs, *e.g.,* entrapment in bumper pads, limb entrapment, crib sharing with another infant, existing health condition).	All	General requirements and warning labels (Sections 5.7 and 7.3).	Inadequate	Some MCFs addressed by proposed additional requirements, while others are related to another product use or other factor out of the scope of the crib mattresses standard.

1. Coil or Spring Lacerations

Laceration hazards due to an exposed coil or spring accounted for 124 of the 440 incident reports (38% of nonfatal incidents). Currently, ASTM F2933–19 does not address this hazard. A cyclic test could address this hazard, by loading and unloading any mattress that contains coils or springs for a set number of cycles, to exercise metal coil springs and identify springs that cannot withstand normal use without breaking, or that may otherwise break the surface of the mattress.

In July 2018, the ASTM Crib Mattress Cyclic Testing task group discussed a cyclic impact test based on the Mattress Support Vertical Impact Test from section 7.4 of ASTM F1169–19 (the standard for full-size cribs). At the F15.66 Crib Mattress subcommittee meeting held in October 2018, the subcommittee discussed both the Mattress Support Vertical Impact Test and the Mattress Durability Roller Testing for spring/coil mattresses, based on ASTM F1566, *Standard Test Methods for Evaluation of Innersprings, Boxsprings, Mattresses or Mattress Sets,* section 7, as possible cycle loading tests. In the following months, CPSC staff and other members of the Crib Mattress Cyclic Testing task group performed variations of the Mattress Support Vertical Impact Test to determine a test that would be most applicable to crib mattresses with coil springs.

On April 29, 2019, CPSC staff sent a letter to the subcommittee chair in response to ballot F15 (19–04), stating staff's initial test results. In the task group meeting in July 2019, staff and one manufacturer discussed the results of their continued testing and refined the requirements. The task group focused testing on the Mattress Support Vertical Impact Test because this test uses the same equipment employed in full-size crib testing. After replicating the full-size crib impact test (45 pounds dropped 750 times), staff assessed that the test was too onerous. During task group discussions, consensus was to lower the weight to 30 pounds and increase the number of cycles to 1,000.

ASTM has not held additional task group meetings or issued ballots on this issue since the July 2019 task group meeting. The Commission's proposed requirement in the NPR to address coils and springs is based on the last work of the task group, and the test requires a 30-pound impactor drop, similar to the full-size crib standard, on a mattress in four specified locations for a total of 1000 impacts. Tab B of Staff's NPR Briefing Package provides additional details of staff's work to address coil and spring lacerations and the proposed cyclic test.

2. Fit Issues

Fit issues are associated with 108 of 439 incidents; 20 were fatal, and 88 were nonfatal. In these reports, gaps between the crib mattress and the crib rail or play yard mesh, on one or more areas around the perimeter of a crib mattress, created a wedging or entrapment hazard. Reports of mattresses that fail to expand, compress, or buckle, indicate the potential to form hazardous gaps between the corner of a crib and the corner of the mattress. This hazard can arise when a fitted sheet is placed on the mattress, creating large corner gaps that could lead to entrapment. Fit issues can also occur when a mattress is not dimensionally appropriate for use with a specific crib.

a. Mattress Compression With Fitted Sheet

ASTM F2933–19 contains a mattress dimensional conformity test intended to address hazardous gaps between the edge of a crib and the mattress. However, staff testing found that tight-fitting sheets over crib mattresses can create gaps between the corners of the mattress and the interior corner of the crib, creating an entrapment hazard. ASTM F2933–19 does not adequately addresses this mattress compression issue that creates an entrapment hazard between a full-size crib mattress and the side or corner of a full-size crib.

For further examination, staff obtained 11 full-size crib mattresses and eight 100 percent cotton full-size crib mattress sheets to investigate this reported hazard pattern. Staff washed four sets of sheets twice in hot water then dried them at the highest temperature setting; staff did not wash the remaining four sheet sets. Staff measured the length and width of two corner seams of the eight mattress sheets with the corner seams straightened. Staff measured length and width by holding the innermost ends of two adjacent corner seams, separating them until a straight edge was formed, and measuring the straight edge.

Staff set aside for mattress testing the smallest sheet of each group, as determined by the smallest length and width dimensions. The sheets were then fitted on the mattresses to determine the change in dimensions and whether any potentially hazardous gaps were created. Staff shared the test results, detailed in Tab B of Staff's NPR Briefing Package, with the subcommittee chair on March 20, 2020, but no ASTM subcommittee or task group meetings for crib mattresses have occurred since then, due to the COVID–19 pandemic. To strengthen the standard, the Commission proposes in the NPR to add a test for full-size mattresses to assess compression and fit issues caused by a tight-fitting sheet. This additional test may also help with complaints around mattresses inflating or expanding,

because the proposed test would repeat the dimensional conformity test.

b. Dimension Requirements for After-Market Non-Full-Size Crib Mattresses

ASTM F2933–19 addresses dimensional requirements for non-full-size crib mattresses in two places: Section 5.7, which addresses mattresses ''supplied with'' a non-full-size crib (OEM mattresses), and section 5.9, which addresses after-market mattresses for non-full-size cribs (mattresses purchased separately from a crib, which are not intended by the OEM as a replacement mattress). Dimensional requirements for non-full-size crib mattresses are a key requirement in ASTM F2933–19, because size requirements prevent hazardous gaps from forming between the edge of a mattress and the side of the crib, where infants can become entrapped and suffocate. Table 7 presents the types of crib mattresses covered by ASTM F2933 and the current dimensional requirements for each mattress type.

TABLE 7—CURRENT PERFORMANCE REQUIREMENTS FOR CRIB MATTRESS DIMENSIONS

		ASTM F2933–19	16 CFR 1221 ASTM F406	16 CFR 1220 ASTM F406	ASTM F2933–19	ASTM F2933–19
		Crib mattresses	Play yards	Non-full-size cribs	Crib mattresses	Crib mattresses
		5.7.1.1	5.16.2	5.17	5.7.2	5.9.1
Full-Size	All	X				
Play Yards	Original *		X			X **
	After-market					
Rectangular NFS	Original *			X	X	
	After-market					
Non-Rectangular NFS	Original *			X	X	X *
	After-market					

* Includes ''replacement mattresses,'' which are assumed to be sold by an original equipment manufacturer (OEM) and equivalent in dimension and specification to the original mattress (*see* ASTM F2933–19 section 3.1.1.1).

** After-market play yard mattresses that are also used in a bassinet attachment to that play yard must also meet ASTM F2194, for bassinets.

Table 7 demonstrates a gap in the dimensional requirements for after-market, rectangular-shaped, non-full-size crib mattresses in section 5.9 ASTM F2933–19 (shaded), which does not appear to have a performance requirement for mattress dimension. The Commission proposes in the NPR to address this gap by expanding the non-full-size crib mattress requirements in 5.7.2, which currently only apply to OEM mattresses, to apply to all non-full-size crib mattresses.

Although the after-market requirements in section 5.9 are purportedly intended to apply to ''*After-market mattress for play yard and non-full size crib,*'' the requirements in section 5.9.1 are limited to ''mesh/fabric sided products'' (meaning play yards) and ''rigid sided non-rectangular products'' (meaning non-rectangular non-full-size cribs). Because section 5.7 of ASTM F2933–19 only applies to OEM mattresses, no performance requirements in the standard apply to after-market, rectangular-shaped, non-full-size crib mattresses. CPSC staff reviewed the rationales for changes to the after-market requirements for crib mattresses in the ASTM standards, and notes that the ASTM intentionally limited performance requirements in section 5.9.1 by omitting rectangular mattresses for rigid-sided products (*i.e.,* rectangular non-full-size cribs). Staff reviewed ASTM minutes and ballot F15 (17–02), which implemented this requirement in F2933; however, staff could not determine the rationale for limiting the requirements to only *non-rectangular* products.

Although ASTM F2933–19 contains no dimension requirements for after-market, rectangular-shaped, non-full-size crib mattresses, the standard does contain warning requirements pertaining to the size of after-market mattresses for rectangular non-full-size cribs. Staff's NPR Briefing Package details these warnings requirements in section 7 of ASTM F2933–19. Generally, solely relying on a warning label puts the onus on the consumer to read, understand, and follow the direction to only use an OEM mattress. CPSC staff concluded that warnings alone are insufficient to address the hazards associated with ill-fitting, after-market, non-full-size crib mattresses.

3. Found Prone, Face Into Mattress, and Softness

CPSC staff separated the hazard patterns for found prone, face into mattress, and softness in the incident review, as reflected in Table 6. However, due to available details in each incident, CPSC staff considers these hazard patterns to be related. Accordingly, the Commission's proposed modifications in the NPR related to each of these hazard patterns may address incidents associated with all three hazard patterns.

Staff found that in 57 percent (66 out of 116) of the reported fatalities and three reported nonfatal incidents (1%), the infant was found in a prone position (face down) with no mention of whether the face of the child was in contact with the crib mattress or crib sheet, and no mention of whether the face was obstructed by other crib bedding or other items in the sleep environment. However, in 11 percent (13 out of 116) of fatalities, when discovered, the child was found prone and the report specifically indicated the face of the child was in contact with a crib mattress or crib sheet covering the crib mattress. Based on the available information about each fatality, staff found that some reports indicate that bedding was present in the sleeping environment, but bedding was not touching the infant or did not appear to be a contributing factor in the death. Additionally, staff found that in 11 percent (36 out of 323) of the nonfatal incidents, the report stated that a crib mattress inner cushioning was too soft. Although these incidents did not involve a fatality, soft bedding, such as pillows and comforters, is associated with infant fatalities, and staff deduces that an excessively soft mattress (*i.e.,* one that may mold around or otherwise occlude an infant's airway), such as mattresses made of memory foam,[46] could present the same hazard.

Pillows, and other soft, pillow-like objects can pose a suffocation hazard to

[46] Memory foam is a viscoelastic-foam product that is sensitive to pressure and temperature and intended to conform to the body.

infants by conforming to the face and blocking the nose and mouth. A crib mattress must be sufficiently firm to prevent a child's nose and mouth from being obstructed by a mattress that is too soft and pillow-like. Prone positioning is a known risk factor for SUID, and may be related to limited physical and developmental capabilities of infants, who may not arouse themselves in a low-oxygen situation. Suffocation-type asphyxial deaths (*e.g.,* smothering) involve occlusion of airways and can occur when an infant is placed to sleep or rolls into a prone position on a surface capable of conforming to the body or face of an infant, such that the mouth and nose are physically blocked, preventing air passage. Moreover, published guidance from the American Academy of Pediatrics (AAP) states: ''A soft sleeping surface (*e.g.,* memory foam) can increase the risk of rebreathing or suffocation'' [47]; and ''Soft mattresses, including those made from memory foam, could create a pocket (or indentation) and increase the chance of rebreathing or suffocation if the infant is placed in or rolls over to the prone position.'' [48] Tab E of Staff's NPR Briefing Package contains additional information about the suffocation hazard.

Other than through warnings, ASTM F2933–19 does not address mattress firmness or softness hazards potentially related to prone and face into mattress incidents. ASTM F2933–19 contains warning requirements regarding prone positioning; however, based on CPSC staff's analysis, warnings alone are inadequate to address the suffocation hazard. The Commission proposes in the NPR a performance requirement to measure mattress firmness, to address some prone-positioning deaths [49]—in which it was not clear that that face was *in* the mattress. In a letter to the ASTM subcommittee chair for crib mattresses, dated December 11, 2019, staff recommended that the subcommittee continue their previous work on mattress firmness. The firmness task group met on January 8, 2020, to discuss this recommendation. In a task group meeting held on February 13, 2020, staff verbally shared the results of staff's testing to AS/NZS 8811.1:2013 and a draft test method in ISO/CD 23767, although most members had yet to perform any testing. Staff also shared testing results in a letter to the subcommittee and task group chair on March 20, 2020. The task group planned to discuss CPSC testing results at the April subcommittee meeting, which was canceled due to the COVID–19 pandemic. CPSC staff's testing, detailed in Tab B of Staff's NPR Briefing Package, found few failures with either test method, based on 11 sample mattresses available from big box retail stores.

After evaluating the hazards associated with soft surfaces, the Commission proposes in the NPR additional performance requirements to make the standard more stringent, to further reduce the risk of death and injury associated with mattresses that are too soft and have the ability to conform to an infant's face. Although the warning label change and the firmness test will not make prone sleeping safe, they may help to reduce the instances in which an infant maneuvers into a prone position with its face *in* the mattress that could have been mitigated with a firmer surface. CPSC staff determined that the AS/NZS 8811.1:2103 is more repeatable and more stringent than the draft test in ISO/CD 23767. Accordingly, the Commission proposes a mattress firmness test in the NPR for all crib mattresses within the scope of the standard that is based on sections 6 and 8 of AS/NZS 8811.1:2013.[50] Tab B of Staff's NPR Briefing Package contains additional details regarding staff's testing of mattress firmness and the rationale for recommending the addition of the performance test based on AS/NZS 8811.1:2013.

B. Adequacy of Marking, Labeling, and Instructions [51]

Universally, labeling experts view warning about a hazard as less effective at addressing hazards than either designing the hazard out of a product, or guarding the consumer from the hazard. The use of warnings is lower in the hazard-control hierarchy than design-based approaches because the effectiveness depends on persuading consumers to alter their behavior in some way to avoid hazards, rather than eliminating hazards or inhibiting exposure to hazards. Therefore, when a standard relies on warnings to address a hazard, warning statements must be as strong as possible; *i.e.,* the warnings must be noticeable, understandable, and motivating. The primary U.S. voluntary consensus standard for product safety signs and labels, ANSI Z535.4, *American National Standard for Product Safety Signs and Labels,* recommends that on-product warnings include content that addresses the following three elements: [52]

- A description of the hazard;
- information about the consequences of exposure to the hazard; and
- instructions regarding appropriate hazard-avoidance behaviors.

Section 7 of ASTM F2933–19 specifies requirements for marking and labeling for full-size crib mattresses, non-full-size crib mattresses, and after-market mattresses for play yards and non-full-size cribs. Based on CPSC staff's examination of literature, incident data, and consumer feedback, the crib mattress warnings specified in ASTM F2933–19 do not adequately address these warning elements regarding the identified hazards. While there are warnings pertaining to infant positioning, soft bedding, and gap entrapment, the wording and formatting of the warning message needs to be improved to communicate the hazards effectively. Below we summarize the relevant warnings in ASTM F2933–19 and the Commission's concerns with the warnings.

1. Warnings Regarding Infant Positioning

Regarding positioning babies on their backs to sleep, ASTM F2933–19 requires the following warning:

> Failure to follow these warnings could result in serious injury or death. To prevent deaths, the U.S. Consumer Product Safety Commission (CPSC), the American Academy of Pediatrics (AAP), and the National Institute of Child Health and Human Development (NICHD) recommend the following:
>
> To reduce the risk of Sudden Infant Death Syndrome (SIDS) and suffocation, pediatricians recommend healthy infants be placed on their backs to sleep, unless otherwise advised by your physician.

The warning to place babies on their backs to sleep includes, and is

[47] *https://www.aafp.org/afp/2017/0615/p806.html.*

[48] *https://pediatrics.aappublications.org/content/138/5/e20162938#ref-19.*

[49] Many factors contribute to prone positioning deaths, and suffocation face down in a soft mattress is just one possible factor. Staff could not definitively associate soft mattresses with specific incidents. However, staff did not associate incidents with firm mattresses, and staff is aware of deaths associated with other products with conforming surfaces (*e.g.,* pillows, blankets).

[50] Staff also used a test based on AS/NZS 8811.1:2013 to address a smothering-type suffocation hazard presented by crib bumpers separating from the crib or otherwise protruding into the sleep area and getting underneath an infant. In these situations, the crib bumper behaves like a quilt or soft bedding that is able to conform to, and occlude, airway openings. Extending the requirement to the mattress will similarly reduce the risk of suffocation posed by soft depressions or indentations in crib mattresses.

[51] Staff's NPR Briefing Package at Tab F contains additional details on the basis for the Commission's proposed modifications to the marking, labeling, and instructional literature requirements for crib mattresses.

[52] All three elements may not be necessary in some cases, such as if certain information is open and obvious or can be readily inferred by consumers. However, people often overestimate the obviousness of such information to consumers.

presented after, a significant amount of unnecessary text. Given that at least 102 of the 116 deaths involved prone positioning, many of which indicated no other known contributing factors, it is imperative that this warning be as clear and direct as possible. As discussed in Tab C of Staff's NPR Briefing Package, and the Appendix to Tab C, the Commission proposes in the NPR to modify this warning statement and its position on the warning label to increase the likelihood of consumers reading and understanding the hazard of prone sleeping.

2. Warnings Regarding Soft Bedding

Regarding soft bedding, ASTM F2933–19 includes the following warnings:

- Infants can suffocate on soft bedding. Never place a pillow or comforter under sleeping infant for additional padding or as a mattress substitute.
- Do not cover the heads of babies with a blanket or over bundle them in clothing and blankets. Overheating can lead to SIDS.
- [For full-size crib mattresses] Only use sheets and mattress pads designed specifically for crib mattresses.
- [For non-full-size crib mattresses] Only use sheets and mattress pads designed specifically for this mattress size.

Staff's review indicates that unnecessary wording is included in the warnings pertaining to soft bedding, and that the warnings are not clearly organized. Reports for at least 49 incidents indicate that caregivers added soft bedding to the sleep area, and survey [53] and focus group [54] feedback demonstrates that consumers commonly use soft bedding in infant sleep areas. As advocated in numerous public awareness campaigns by health and safety professionals, warnings regarding soft bedding must be communicated effectively. The Commission proposes to modify the warning content and formatting to increase the readability and directness of the warnings.

3. Warnings Regarding Gaps

Regarding gaps, in addition to specifying consumers use only sheets and mattress pads designed for the crib mattress, ASTM F2933–19 includes the following warnings:

- [For full-size crib mattresses] Do not use this mattress in a crib having interior dimensions that exceed 28⅝ by 53 in. (73 by 135 cm) as measured from the innermost surfaces of the crib.
- [For non-full-size rigid sided rectangular products] Check for proper fit of the mattress. This mattress measures _____ long, _____ wide, and _____ thick when measured from seam to seam. (The blank is to be filled in.)
- [For play yards and non-full-size cribs] Suffocation hazard: Babies have suffocated:
- In gaps between wrong-size mattress and side walls of product.
- Between the side walls and extra padding, such as stacked mattresses.

ALWAYS check mattress fit by pushing mattress tight to one corner. Look for any gaps between the mattress and the side walls. If this gap is larger than 1 in., the mattress does not fit and should NOT be used.

NEVER stack with another mattress. Use only ONE mattress.

For full-size crib mattresses, staff's review shows that these warnings do not provide consumers with enough information about the gap entrapment hazard. Reports for at least 14 of the cases resulting in death describe gaps involving a full-size crib mattress (at least 119 incident reports including complaints with and without injuries). Regarding this hazard, the warnings in ASTM F2933–19 inform consumers that only the full-size crib mattress is to be used in a crib with the specified dimensions (full-size crib dimensions in compliance with 16 CFR part 1219), and that consumers are to use only sheets and mattress pads designed specifically for crib mattresses. A single statement about specified dimensions is not sufficient, given the prevalence of this hazard and that factors such as rounded edges and compression can increase the size of side wall or corner gaps. The Commission proposes to modify these warnings to present more clearly and accurately the hazard information, including the hazard information for full-size crib mattresses.

4. Additional Concerns Regarding the Warnings

The Commission has additional concerns with the safety information requirements in ASTM F2933–19, which undercut the effectiveness of the communication of the identified hazards. These concerns include, but are not limited to, the following:

- The definition of ''conspicuous'' in section 3 is ambiguous;
- the warning labels do not have a clear and comprehensive hazard identifier;
- the packaging requirements for marking and labeling are limited and exclude full-size crib mattresses;
- there are no requirements for warnings in instructional literature;
- the warning message includes a significant amount of superfluous text, resulting consequently in warning labels that are more difficult to understand and less likely to be read in their entirety; and
- the requirements in section 7 are worded and organized poorly, which may lead to confusion among manufacturers, test labs, and others viewing the standard.

The Commission proposes in the NPR to improve the requirements for safety information in ASTM F2933–19 to address the above concerns and further reduce the risk of injury and death from the identified hazards. In a side-by-side redline of the current and proposed labeling provisions in the Appendix to Tab C of Staff's NPR Briefing Package, staff identifies the specific weaknesses of ASTM F2933–19 for addressing the hazards, and provides explanations for the proposed modifications.

5. Basis for NPR Proposed Modifications to Safety Information

The Commission proposes in the NPR substantial modifications to the requirements for marking and labeling specified in ASTM F2933–19, including a new section on instructional literature. Figure 1 shows a comparison of full-size crib mattress warning labels compliant with ASTM F2933–19 current requirements versus the NPR's proposed labeling requirements.

BILLING CODE 6355–01–P

[53] *See* section II.C of this preamble for information about the DNPES.

[54] The 2019 ''Consumer Product Safety Commission (CPSC): Caregiver Perceptions and Reactions to Safety Messaging Final Report,'' by Fors Marsh Group, includes a discussion of feedback from parents and grandparents who participated in focus groups pertaining to safe sleep practices. *See* Staff's NPR Briefing Package at Tab C for more information.

Current warning in ASTM F2933-19

⚠WARNING

Failure to follow these warnings could result in serious injury or death.
To prevent deaths, the U.S. Consumer Product Safety Commission (CPSC), the American Academy of Pediatrics (AAP), and the National Institute of Child Health and Human Development (NICHD) recommend the following:
To reduce the risk of Sudden Infant Death Syndrome (SIDS) and suffocation, pediatricians recommend healthy infants be placed on their backs to sleep, unless otherwise advised by your physician.
• Infants can suffocate on soft bedding. Never place a pillow or comforter under sleeping infant for additional padding or as a mattress substitute.
• Do not cover the heads of babies with a blanket or over bundle them in clothing and blankets. Overheating can lead to SIDS.
• Do not use this mattress in a crib having interior dimensions that exceed 28⅝ by 53 in. (73 by 135 cm) as measured from the innermost surfaces of the crib.
• Only use sheets and mattress pads designed specifically for crib mattresses.
DO NOT remove these important safety instructions.

Proposed NPR warning

⚠WARNING

SIDS AND SUFFOCATION HAZARDS

ALWAYS place baby on back to sleep to reduce the risks of SIDS and suffocation.

Babies have suffocated:

- on pillows, comforters, and extra padding
- in gaps between a wrong-size mattress, or extra padding, and side walls of product.

NEVER add soft bedding, padding, or an extra mattress.

USE ONLY one mattress at a time.

DO NOT cover the faces or heads of babies with a blanket or over-bundle them. Overheating can increase the risk of SIDS.

ALWAYS check mattress fit **every time you change the sheets,** by pushing mattress tight to one corner. Look for any gaps between the mattress and the side walls. If a gap is larger than 1³/₈ in. (3.5 cm), the mattress does not fit – **do not** use it.

DO NOT use this mattress in a crib having interior dimensions that exceed 28⅝ by 53 in. (73 by 135 cm) as measured from the innermost surfaces of the crib.

USE ONLY sheets and mattress pads designed specifically for crib mattresses.

DO NOT remove these important safety warnings.

Figure 1. Current (left) and proposed (right) example warning labels for full-size crib mattresses.
These labels are not shown in actual size.

BILLING CODE 6355–01–C

Proposed modifications to safety information in the NPR consider improvements to the safety information from ASTM F15.66 and additional members of the ASTM F15 committee on consumer products.[55] Recently, ASTM F15 balloted changes to ASTM F2933–19, which were developed by ASTM F15.66.[56] The recommendations by ASTM F15.66, as well as those provided in comments by ASTM F15 members on the ballot, include improvements to the warning content and format, and clarifications for manufacturers, regulators, and test labs regarding the requirements of the standard. Many of the changes incorporate efforts to align with recommendations from the Ad Hoc Language task group.[57]

In 2016, ASTM juvenile products standards began adopting ''Ad Hoc'' labeling recommendations, to increase the consistency of on-product warning design among juvenile products, and to address numerous warning format issues related to capturing consumer attention, improving readability, and increasing hazard perception and avoidance behavior. The warning format recommendations from Ad Hoc are based primarily on the requirements of ANSI Z535.4, while also accounting for the wide range and unique nature of durable nursery products, the concerns raised by industry representatives, and CPSC staff's recommendations associated with durable nursery product rulemaking projects over the past several years. These recommendations include requirements for the following:

- Content that is ''easy to read and understand,'' not contradicted elsewhere on the product, and in English, at a minimum;
- conformance to the following sections of ANSI Z535.4–2011:
  - ANSI Z535.4, sections 6.1–6.4, which include requirements related to safety alert symbol use, signal word selection, and warning panel format, arrangement, and shape;
  - ANSI Z535.4, sections 7.2–7.6.3, which include color requirements for each panel; and
  - ANSI Z535.4, section 8.1, which addresses letter style;
- minimum text size and text alignment; and
- the use of bullets, lists, outline, and paragraph form for hazard-avoidance statements.

The Ad Hoc recommendations also include text for general labeling issues, such as labeling permanency, and content related to manufacturer contact

[55] Since May 2018, staff has been participating in ASTM F15.66 to address the identified hazards. Subcommittee members include manufacturers, safety and health advocacy groups, and other interested parties.

[56] ASTM F15 balloted revisions to ASTM F2933–19, particularly section 7, on April 6, 2020, resulting in 97 affirmatives, 7 negatives, and 293 abstentions (ASTM ballot F15 (20–02), item #15, *Proposed Changes to ASTM F2933–19 Standard Consumer Safety Specification for Crib Mattresses (WK 72077)*). Currently, ASTM F15.66 has not resolved the negative comments, so ESHF staff has considered the negative comments in developing staff's recommended changes to the safety information in ASTM F2933–19.

[57] The ''Recommended Language Approved by Ad Hoc Task Group Revision E,'' dated May 28, 2019, documents recommendations from the ASTM Ad Hoc Language task group for ASTM juvenile products standards.

information and date of manufacture. The majority of the Commission's proposed modifications incorporate recommendations from stakeholders participating in ASTM F15, but several proposed modifications in the NPR deviate from what has been balloted and recommended by ASTM F15. These modifications in the NPR are based on staff's further consideration of the available data, and have not yet been reviewed by ASTM.

VII. Proposed Standard for Crib Mattresses

The Commission proposes in the NPR a mandatory standard for crib mattresses that incorporates by reference ASTM F2933–19 with modifications to make the standard more stringent, to further reduce the risk of injury associated with crib mattresses. Below we summarize the proposed modifications in the NPR.

A. Cyclic Test for Coil or Spring Lacerations

To further reduce the risk of infant lacerations from exposed coils and springs, the Commission proposes in the NPR to require a cyclic loading test for all crib mattresses that use coils and springs, as follows:

1. Mattress shall be tested in an enclosed frame measuring 29 inches x 53 inches (737 mm by 1346 mm) for the purpose of restricting mattress movement. A crib meeting the requirements of ASTM F1169–19 would suffice.

2. The mattress can be placed on top of a ¾″ piece of plywood or OSB, which is rigidly supported along the perimeter.

3. An impactor with the dimensions of the vertical impactor of ASTM F1169–19 weighing 30 lbs. shall be dropped from a height of 6 inches from the top of the mattress surface to the bottom of the impactor, 250 times in four locations (specified in Figure 1), for a total of 1,000 cycles. Cyclic loading rate shall be one drop every 4 ± 1 seconds.

4. At the conclusion of the cyclic loading test, the mattress shall be removed from the test enclosure and visually inspected for exposed wires or coil springs.

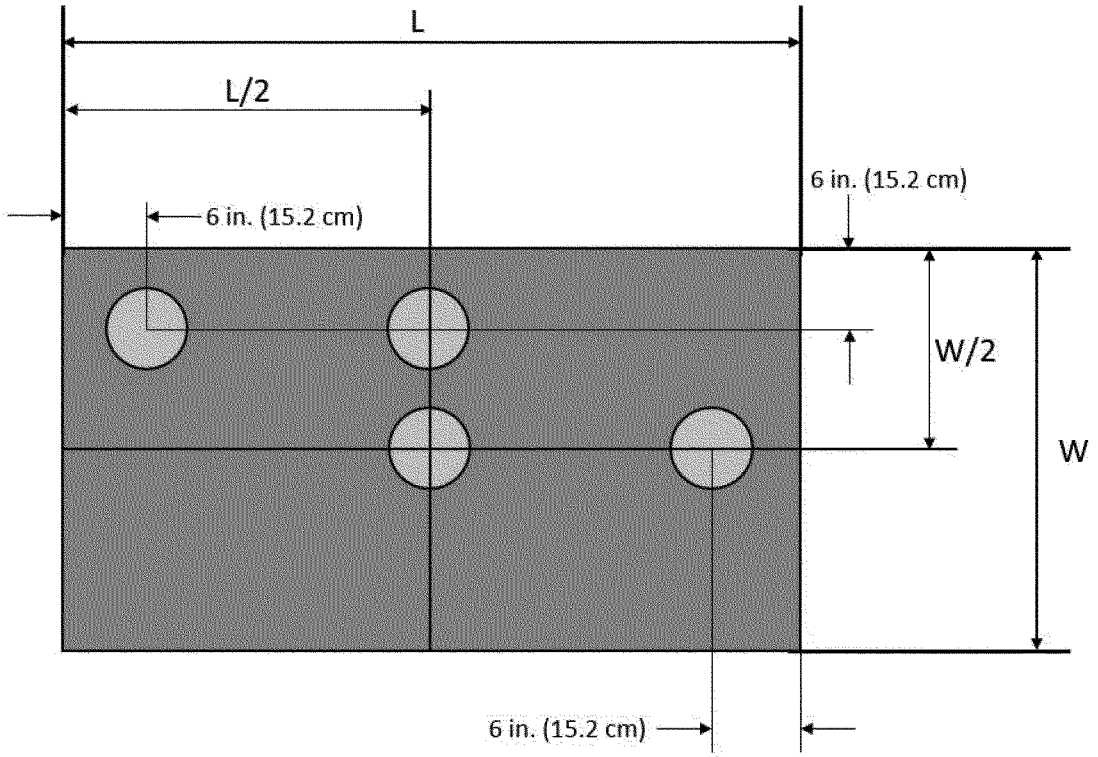

Figure 1. Impact test locations.

B. Test for Mattress Compression From Fitted Sheets

To further reduce the risk of injury associated with corner gap entrapment from compression by fitted sheets, the Commission proposes in the NPR the following new test for full-size crib mattresses:

1. To condition the sheet for compression testing, a store-bought fitted mattress sheet intended for the tested mattress size, consisting of 100 percent cotton, shall be washed in hot water (50 °C [122 °F] or higher) and dried a minimum of two times on the highest setting, using household textile laundering units.

2. The shrunken fitted sheet shall be placed fully on the mattress, such that each sheet edge is wrapped fully around and under the mattress.

3. The mattress, with the shrunken sheet, shall meet the *Mattress Dimension* requirements in ASTM F2933–19.

3.1. A full-size crib mattress shall be measured according to section 6.2 of the standard.

3.1.1. After dimensional measurements are taken, while no force is being applied, measure the corner gap between the adjoining Walls C and D and the crib mattress. See Figure 1 for illustration. The gap shall not exceed 1.75 in.

3.1.1.1. Corner gap measurements shall be repeated after rotating the mattress 180° and repositioning it in the corner following sections 6.2.2.1 and 6.2.2.2 of ASTM F2933–19.

The Commission is not aware of incidents related to non-full-size crib mattresses compressing when sheets are installed. Therefore, at this time, the Commission is not proposing a similar

sheet compression test for non-full-size crib mattresses. However, the Commission seeks more information on whether to require the sheet compression test for non-full-size crib mattresses, and whether such a test would help reduce corner gap entrapments in non-full-size cribs. Accordingly, the Commission invites comments regarding the applicability of the sheet compression test for non-full-size crib mattresses and the use of sheets with non-full-size mattresses.

C. Dimension Requirements for After-Market Non-Full-Size Crib Mattresses

To further reduce the risk of injury associated with after-market non-full-size crib mattresses, the Commission proposes in the NPR to require a dimensional performance requirement for all non-full-size crib mattresses. The Commission proposes that the current performance requirements for OEM non-full-size crib mattresses in section 5.7.2 of ASTM F2933–19 be modified to apply to all non-full-size crib mattresses, regardless of whether the mattress is sold with a crib, and regardless of the shape of the mattress. The size and thickness requirements for OEM non-full-size crib mattresses in section 5.7.2 of ASTM F2933–19 repeat the requirements for non-full-size crib mattresses in section 5.17 of ASTM F406. To preclude the size requirements in each standard from unintentionally diverging in the future, the Commission proposes in the NPR to revise section 5.7.2 to refer to the requirements for non-full-size crib mattresses in F406, rather than repeating the same requirements in F2933.

D. Corrections to Section 5.9 of ASTM F2933–19

To accommodate the modification for non-full-size cribs in section 5.7, the Commission proposes in the NPR to remove references to after-market non-full-size crib mattresses from section 5.9 of ASTM F2933–19, such that section 5.9 focuses solely upon performance requirements for after-market play yard mattresses.

The Commission also notes an inconsistency in the language of ASTM F2933–19 section 5.9.1.3, which requires that a ''replacement mattress'' for a play yard bassinet with a bassinet attachment meet certain specifications in ASTM F2194, when tested with each brand and model it is intended to replace. This requirement for bassinet mattresses appears in the section for ''after-market'' mattresses. Section 3.1.1 of ASTM F2933–19 specifically exempts ''replacement'' mattresses from the term ''after-market,'' because ''replacement'' mattresses are supplied by an OEM and are equivalent to the original mattress. The Commission proposes in the NPR to clarify that the requirements in section 5.9.1.3 apply to after-market mattresses, by replacing the term ''replacement,'' with the word ''after-market.''

Appendix B to Tab B of Staff's NPR Briefing Package contains a redline of the proposed changes to sections 5.7.2 and 5.9 of ASTM F2933–19. The Commission invites comments on this proposal. Staff intends to continue to work with ASTM to address concerns with exempting after-market, rectangular-shaped, non-full-size crib mattresses from performance requirements.

E. Mattress Firmness Test

To further reduce the risk of infant suffocation associated with surface softness in crib mattresses, the Commission proposes the following mattress firmness test for all crib mattresses within the scope of the standard, based on a test for mattress firmness in section 8 of AS/NZS 8811.1:2013:

1. Mark three equidistant points along the longitudinal center line, with one at the center and the other two equidistantly between the center and the edge of the mattress. Choose one more ''worst-case'' scenario test location(s) where an infant's head might lie in a particularly soft spot, or an infant's nose or mouth might contact a protrusion above the sleep surface.
2. Hold the test fixture with its base horizontally, and rotate it so the feeler arm is aligned with the center line of the sleep surface, and pointing in the same direction for each test; then gently set down the fixture on one of the test locations, ensuring that the edge of the bottom disk does not extend beyond the edge of the sleep surface.
3. If the level indicates that the feeler arm is approximately level when the fixture is resting on the sleep surface, observe whether the feeler arm makes any contact with the top of the sleep surface or cover. If the feeler arm is not level, decompress the mattress, allow it to settle, and start again. If the feeler arm contacts the sleep surface even when the test fixture is tilted back so as to raise the feeler arm, assume that such contact would occur had the fixture come to rest horizontally.
4. Repeat steps at remaining locations.

F. Proposed Modifications to Safety Information

As detailed in Tab C of Staff's NPR Briefing Package, and the Appendix to Tab C, the Commission proposes in the NPR to include a significant number of modifications to the requirements for the safety information that accompanies crib mattresses, including warning labels, packaging, and instructions. Labeling modifications include the following:

- Improved definition of ''conspicuous'' to clarify that the warning label's placement must make it visible to someone who positions the mattress for use;
- Updated the general marking and labeling requirements;
- Improved warning labels and examples;
- Re-organized and clarified the marking and labeling requirements for manufacturers, test labs, and other viewers of the standard;
- Added warning requirements for full-size crib mattress packaging and improved the warning requirements for packaging of after-market mattresses for play yards and non-full-size cribs; and
- Added a new section on instructional literature, which provides an additional medium by which to communicate safe-use information.

These modifications are intended to further reduce the risk of death and serious injury associated with crib mattresses, such as SUID related to prone positioning of infants, soft bedding in sleep areas, and hazardous gaps between crib mattresses and product sides. The majority of the modifications incorporate recommendations from stakeholders participating in ASTM F15, with several deviations based on CPSC staff's further consideration of the available data, which have not yet been reviewed by ASTM. While safety information is unlikely to effectively address the identified hazards, these modifications are likely to support the effectiveness of the proposed performance requirements, increase the likelihood of consumers understanding the hazards, and clarify the requirements for manufacturers, test labs, and other viewers of the standard.

VIII. Proposed Amendment to 16 CFR Part 1112 To Include NOR for Crib Mattresses

The CPSA establishes certain requirements for product certification and testing. Products subject to a consumer product safety rule under the CPSA, or to a similar rule, ban, standard or regulation under any other act enforced by the Commission, must be certified as complying with all applicable CPSC-enforced requirements. 15 U.S.C. 2063(a). Certification of children's products subject to a children's product safety rule must be based on testing conducted by a CPSC-accepted third party conformity

assessment body. *Id.* 2063(a)(2). The Commission must publish an NOR for the accreditation of third party conformity assessment bodies to assess conformity with a children's product safety rule to which a children's product is subject. *Id.* 2063(a)(3). Thus, the proposed rule for 16 CFR part 1241, *Standard Consumer Safety Specification for Crib Mattresses,* if issued as a final rule, would be a children's product safety rule that requires the issuance of an NOR.

The Commission published a final rule, *Requirements Pertaining to Third Party Conformity Assessment Bodies,* 78 FR 15836 (March 12, 2013), codified at 16 CFR part 1112 (''part 1112'') and effective on June 10, 2013, which establishes requirements for accreditation of third party conformity assessment bodies to test for conformity with a children's product safety rule in accordance with section 14(a)(2) of the CPSA. Part 1112 also codifies all of the NORs issued previously by the Commission.

All new NORs for new children's product safety rules, such as the crib mattress standard, require an amendment to part 1112. To meet the requirement that the Commission issue an NOR for the crib mattress standard, as part of this NPR, the Commission proposes to amend the existing rule that codifies the list of all NORs issued by the Commission to add crib mattresses to the list of children's product safety rules for which the CPSC has issued an NOR.

Test laboratories applying for acceptance as a CPSC-accepted third party conformity assessment body to test to the new standard for crib mattresses would be required to meet the third party conformity assessment body accreditation requirements in part 1112. When a laboratory meets the requirements as a CPSC-accepted third party conformity assessment body, the laboratory can apply to the CPSC to have 16 CFR part 1241, *Standard Consumer Safety Specification for Crib Mattresses,* included in the laboratory's scope of accreditation of CPSC safety rules listed for the laboratory on the CPSC website at: *www.cpsc.gov/labsearch.*

IX. Proposed Amendment to Definitions in Consumer Registration Rule

The statutory definition of ''durable infant or toddler product'' in section 104(f) applies to all of section 104 of the CPSIA. In addition to requiring the Commission to issue safety standards for durable infant or toddler products, section 104 of the CPSIA also directed the Commission to issue a rule requiring that manufacturers of durable infant or toddler products establish a program for consumer registration of those products. Public Law 110–314, section 104(d).

Section 104(f) of the CPSIA defines the term ''durable infant or toddler product'' and lists examples of such products:

> (f) DEFINITION OF DURABLE INFANT OR TODDLER PRODUCT. As used in this section, the term ''durable infant or toddler product''—
>
> (1) means a durable product intended for use, or that may be reasonably expected to be used, by children under the age of 5 years; and
>
> (2) includes—
>
> (A) full-size cribs and non-full-size cribs;
>
> (B) toddler beds;
>
> (C) high chairs; booster chairs, and hook-on-chairs;
>
> (D) bath seats;
>
> (E) gates and other enclosures for confining a child;
>
> (F) play yards;
>
> (G) stationary activity centers;
>
> (H) infant carriers;
>
> (I) strollers;
>
> (J) walkers;
>
> (K) swings; and
>
> (L) bassinets and cradles.

Public Law 110–314, section 104(f).

The product categories listed in section 104(f)(2) of the CPSIA represent a non-exhaustive list of durable infant or toddler product categories, including infant sleep products such as cribs (full-size and non-full-size), toddler beds, bassinets and cradles, and play yards. *Id.* 2056a(f)(2). Although crib mattresses are used with infant sleep products, crib mattresses are not included in the statutory list of durable infant or toddler products.

In 2009, the Commission issued a rule implementing the consumer registration requirement. 16 CFR part 1130. As the CPSIA directs, the consumer registration rule requires each manufacturer of a durable infant or toddler product to: Provide a postage-paid consumer registration form with each product; keep records of consumers who register their products with the manufacturer; and permanently place the manufacturer's name and certain other identifying information on the product. When the Commission issued the consumer registration rule, the Commission identified six additional products as ''durable infant or toddler products'':

- Children's folding chairs;
- changing tables;
- infant bouncers;
- infant bathtubs;
- bed rails; and
- infant slings.

16 CFR 1130.2. The Commission stated that the specified statutory categories were not exclusive, but that the Commission should explicitly identify the product categories that are covered. The preamble to the 2009 final consumer registration rule states: ''Because the statute has a broad definition of a durable infant or toddler product but also includes 12 specific product categories, additional items can and should be included in the definition, but should also be specifically listed in the rule.'' 74 FR 68668, 68669 (Dec. 29, 2009).

This Commission proposes in the NPR to amend part 1130 to include ''crib mattresses,'' as defined in ASTM F2933, including full-size crib mattresses, non-full-size crib mattresses, and after-market mattresses for play yards and non-full-size cribs, as durable infant or toddler products. The Commission proposes to include ''crib mattresses'' as a ''durable infant or toddler product'' because: (1) They are intended for use, and may be reasonably expected to be used, by children under the age of 5 years; (2) they are products similar to the products listed in section 104(f)(2) of the CPSIA; (3) they are used in conjunction with other durable infant or toddler products used for unattended infant sleep, such as cribs, bassinets, and play yards; and (4) CPSC cannot fully address the risk of injury associated with such infant sleep products without addressing the hazards associated with the use of crib mattresses in these infant sleep products.

X. Incorporation by Reference

The Commission proposes to incorporate by reference ASTM F2933–19, with modifications to further reduce the risk of injury associated with crib mattresses. The Office of the Federal Register (OFR) has regulations concerning incorporation by reference. 1 CFR part 51. For a proposed rule, agencies must discuss in the preamble of the NPR ways that the materials the agency proposes to incorporate by reference are reasonably available to interested persons or how the agency worked to make the materials reasonably available. In addition, the preamble of the proposed rule must summarize the material. 1 CFR 51.5(a).

In accordance with the OFR's requirements, section V of this preamble summarizes the provisions of ASTM F2933–19 that the Commission proposes to incorporate by reference. ASTM F2933–19 is copyrighted. By permission of ASTM, the standard can be viewed as a read-only document during the comment period on this NPR, at: *http://www.astm.org/cpsc.htm.* To download or print the standard, interested persons

may purchase a copy of ASTM F2933–19 from ASTM, through its website (*http://www.astm.org*), or by mail from ASTM International, 100 Bar Harbor Drive, P.O. Box 0700, West Conshohocken, PA 19428. Alternatively, interested parties may inspect a copy of the standard at CPSC's Division of the Secretariat by contacting Alberta E. Mills, Division of the Secretariat, U.S. Consumer Product Safety Commission, 4330 East-West Highway, Bethesda, MD 20814; telephone: 301–504–7479; email: *cpsc-os@cpsc.gov.*

XI. Effective Date

The Administrative Procedure Act (APA) generally requires that the effective date of a rule be at least 30 days after publication of the final rule. 5 U.S.C. 553(d). The Commission proposes a 6-month effective date for a final rule on crib mattresses. Barring evidence to the contrary, 6 months is typically sufficient time for suppliers to come into compliance with a new standard, and this amount of time is typical for other CPSIA section 104 rules. Six months is also the period that the Juvenile Products Manufacturers Association typically allows for products in their certification program to shift to a new standard once that new standard is published. Therefore, juvenile product manufacturers are accustomed to adjusting to new standards within this time. The Commission notes that this NPR for crib mattresses contains additional testing requirements and labeling changes, and that the current global COVID–19 pandemic has affected supply chains. The Commission invites comments, particularly from small businesses, regarding the amount of time they will need to come into compliance with a final rule.

XII. Regulatory Flexibility Act [58]

A. Introduction

The Regulatory Flexibility Act (RFA) requires that agencies review a proposed rule for the rule's potential economic impact on small entities, including small businesses. Section 603 of the RFA generally requires that agencies prepare an initial regulatory flexibility analysis (IRFA) and make the analysis available to the public for comment when the agency publishes an NPR. 5 U.S.C. 603. Section 605 of the RFA provides that an IRFA is not required if the agency certifies that the rule will not, if promulgated, have a significant economic impact on a substantial number of small entities. The IRFA must describe the impact of the proposed rule on small entities and identify significant alternatives that accomplish the statutory objectives and minimize any significant economic impact of the proposed rule on small entities. Specifically, the IRFA must contain:

- A description of the reasons why action by the agency is being considered;
- a succinct statement of the objectives of, and legal basis for, the proposed rule;
- a description of, and where feasible, an estimate of the number of small entities to which the proposed rule will apply;
- a description of the projected reporting, recordkeeping, and other compliance requirements of the proposed rule, including an estimate of the classes of small entities subject to the requirements and the type of professional skills necessary for the preparation of reports or records; and
- identification, to the extent possible, of all relevant federal rules that may duplicate, overlap, or conflict with the proposed rule.

Additionally, the IRFA must describe any significant alternatives to the proposed rule that accomplish the stated objectives of applicable statutes and minimize any significant economic impact of the proposed rule on small entities. CPSC staff prepared an IRFA for this rulemaking which appears at Tab F of the Staff's NPR Briefing Package. We provide a summary of the IRFA below.

B. Agency Action, NPR Objectives, Product Description, and Market Description

An explanation of why the agency is considering issuing a mandatory rule for crib mattresses and a statement of the objectives of, and legal basis for, the proposed rule, are set forth in section I of this preamble. Section II of this preamble describes the types of crib mattresses within the scope of the NPR, the market for crib mattresses, and the use of crib mattresses in the United States.

C. Small Entities to Which the NPR Would Apply

Manufacturers of crib mattresses are typically categorized under the NAICS category 337910 (Mattress Manufacturing). The Small Business Administration (SBA) guidelines consider mattress manufacturing establishments to be small if they have fewer than 1,000 employees.[59] Importers of crib mattresses are typically categorized under NAICS code 423210 (Furniture Merchant Wholesalers) and SBA guidelines would consider them small if they have fewer than 100 employees.

Staff identified 26 manufacturers and importers of full-size and non-full-size crib mattresses, and after-market play yard mattresses. A majority of the 26 firms have under 50 employees. Most of the firms are domestic manufacturers (14) or domestic importers (8). Four firms are foreign. Sixteen of these 26 firms meet the SBA criteria for small businesses, and 10 firms would be considered large according to the SBA criteria.[60] Among the 16 small domestic firms identified by staff, 9 were manufacturers and 7 were importers. Staff observes that annual revenue varies among small domestic firms, as median annual revenue is estimated at $6,740,000, but average annual revenue is higher at $46,037,100.

Online registries are widely available for new crib mattresses. Producers supply crib mattresses to the U.S. market via electronic commerce websites, such as *Amazon.com*, Buy Buy Baby, Hayneedle, KOHL'S, Overstock, Walmart, and Wayfair. According to a 2017 Statista survey of baby products, the majority (59 percent) of respondents indicated they buy baby products mainly or exclusively online.[61] Staff expects that consumers of crib mattresses that do not buy online, purchase their mattresses in retail stores.

The majority of crib mattresses on the market are full-size crib mattresses. Staff estimates that 40 percent of crib mattresses on the market are coil/innerspring mattresses, and approximately 60 percent of crib mattresses are foam-core mattresses.[62] Among small domestic manufacturers, approximately 45 percent of available crib mattresses are coil mattresses. Among small importers, just 25 percent of available crib mattresses are composed of a coil core. Seventy-five percent of crib mattresses supplied by small domestic importers of crib mattresses consist of a foam core. Staff identified at least three small firms that only produce foam-core mattresses,

[58] *See* Tab F of Staff's NPR Briefing Package for additional information on the RFA.

[59] The size guidelines are established by the U.S. Small Business Administration (SBA).

[60] Based on size and revenue data from Reference USA and firm financial reports, websites, and press releases.

[61] Statista Survey of Baby Products in the U.S., 2017.

[62] Based on staff's compiled search results of data available on the internet found March through May 2020.

while the majority of small entities produce a combination of both coil and foam-core crib mattresses.

D. Impact of the Proposed Rule on Small Manufacturers and Importers

Of the 16 small manufacturers and importers identified by staff, 12 (8 manufacturers and 4 importers) are members of the JPMA, but staff cannot determine how many crib mattresses are currently certified to ASTM F2933–19. Many of the firms that would be subject to the draft proposed rule are known to produce a variety of children's products that are already subject to CPSC children's product safety rules, and therefore, are familiar with such requirements.[63] Additionally, two firms that are not JPMA members supply products that claim to meet ASTM standards. The Commission seeks comments from small firms on the number of mattress models they would typically certify to the ASTM standard annually.

Manufacturers and importers of crib mattresses would be responsible for ensuring that their products comply with the requirements of the proposed rule. If a crib mattress does not comply with the requirements, the manufacturers or importers will need to modify the product or cease manufacture or importation. Importers might be able to work with their manufacturers to supply compliant mattresses and could potentially switch suppliers if their current supplier is unwilling to supply current mattresses. Alternatively, importers might simply drop the noncompliant mattresses from their product lines.

Additionally, as required by section 14 of the CPSA and its implementing regulations, manufacturers and importers of crib mattresses would be required to certify that their crib mattresses comply with the requirements of a final rule, if issued, based on the results of third party testing by a CPSC-accepted third party conformity assessment body (*i.e.,* testing laboratory). Crib mattresses are already subject to third party testing requirements and adoption of the proposed rule would only augment existing testing requirements.[64] [65]

1. Costs Associated With Modifying Products

The majority of crib mattresses currently available on the market will not require extensive modification to comply with the proposed rule. Staff reports that the majority of crib mattresses they tested already meet the performance requirements of the proposed rule. We do not know the exact costs of modifying crib mattresses to comply with the proposed rule, which would vary by product model. Modifying crib mattresses to comply with the compression standard could be as simple as adding a perimeter border wire to the mattress edge or an anti-sag weight distribution bar to the mattress structure. However, staff believes it possible that a required modification could be prohibitively expensive, and therefore, the proposed rule may result in the removal of certain crib mattresses from commerce.

Generally, the costs associated with providing instructional materials are low on a per-unit basis. Many firms already provide instructions with their products, but they may have to change the content or formatting of the instructions to comply. Likewise, the cost of warning labels is generally low, especially if some warning labels are already present, and the product does not need to be modified to accommodate new labels.

2. Third Party Testing Costs

If issued, a final rule would require all manufacturers and importers of crib mattresses to meet additional third-party testing requirements under section 14 of the CPSA. Third-party testing requirements will include any physical and mechanical test requirements specified in the final crib mattress rule. Based on information from a testing laboratory, the cost of testing to the current version of ASTM F2933 is $200 to $250 per sample. The additional testing that would be required by the proposed rule would increase this cost by $50 to $75 per sample tested. Thus, the total cost of the third-party testing would be $250 to $325 per sample. Given that the average number of crib mattress models per firm is approximately 12, the cost of the third-party testing could be about $3,000 to $3,900, if only one model per sample were required to provide a high degree of assurance that the model complied with the requirements of the rule.

Additionally, according to conformity assessment bodies that staff contacted, for each mattress model to be tested, the firm will need to provide the crib or play yard equipment intended to be used with the mattress being tested. However, to comply with ASTM F2933–19 and other CPSC requirements for children's products, the costs of supplying a crib, crib mattress, or play yard to the conformity assessment body are already borne by the producer for testing under previously adopted rules and standards. Regardless, third-party testing facilities have indicated that they are unable to store equipment that will be needed or used during testing, such as cribs or play yards, for long periods of time. Therefore, ensuring that all crib equipment needed for testing arrives at the testing lab at the appropriate time may pose a logistical burden, even if there is no increase in monetary costs for freight or shipping.

Additional costs of the proposed testing would include the cost of the 100 percent cotton sheets used during testing.[66] [67] These sheets would be used in the proposed ''Compression Test'' for full-size crib mattresses. While the number of times a sheet can be reused has not yet been determined, we assume one new sheet per test. The cost of one, 100 percent cotton, full-size crib mattress sheet is approximately $10.[68] Staff estimates approximately 3 out of 4 crib mattresses on the market are full-size crib mattresses.[69] Therefore, for a typical manufacturer or importer with 12 crib mattress models, 9 might be full-size crib mattresses, and the additional cost of one fitted sheet per full-size mattress would be $90, plus the testing costs charged by the conformity assessment body.

For a subset of mattresses, *i.e.,* metal coil spring crib mattresses, the proposed rule would include cyclic impact testing called the ''Cyclic Load Test.'' During the Cyclic Load Test, an impactor weighing 30 pounds shall be dropped repetitively from above the mattress surface, and across four different locations on the mattress. As a result of the Cyclic Load Test, the mattress product is rendered unusable for either of the proposed mattress firmness or

[63] Crib mattresses listed for sale on a variety of online retail websites often include product descriptions indicating that the crib mattress product meets CPSC general safety standards, while not referencing any one specific CPSC safety standard.

[64] Manufacturers and importers of children's products must certify compliance with applicable federal safety requirements in a Children's Product Certificate (CPC). In most instances, testing by a third party CPSC-accepted laboratory must serve as the basis for the production of the CPC.

[65] Mattresses intended for children must be tested at a third party test laboratory or a fire-walled internal laboratory: *https://cpsc.gov/s3fs-public/pdfs/blk_media_mattress.pdf.* In either case, the lab would need to be CPSC-accepted to test to the standards since crib mattresses are considered to be primarily intended for children 12 and under.

[66] The proposed test includes measuring the mattress without a fitted sheet and with a twice-washed fitted sheet.

[67] With input from the ASTM standards organization, CPSC staff will determine the number of times a sheet can be reused.

[68] Based on compiled search results of data available on the internet.

[69] Based on a review of over 300 mattress models available for sale on the internet.

compression tests. Under cyclic load testing, the mattress product could be misshapen, deformed, or otherwise destroyed, and wire coils may protrude from the mattress surface. Approximately 40 percent of crib mattresses available for sale are metal spring coil mattresses. The average cost of a crib mattress available for sale in the United States is $150,[70] and on average, the typical manufacturer or importer of crib mattresses tests 12 models annually. Therefore, the cost to the typical small firm of the destroyed mattresses would amount to 40 percent of $1,800 (12 models × $150), or approximately $720, as a result of the proposed Cyclic Load Test.

Based on the foregoing, for a typical manufacturer or importer with 12 crib mattress models that requires only one test per model to provide a high degree of assurance, the full cost of third party testing will be approximately $3,000 to $3,900, plus $90 in costs for fitted-sheet testing materials, and $720 for the cost of used test mattresses, for a total of $3,810 to $4,710 or an average of $318 to $393 per model.

3. Summary of Impacts

Generally, based on Small Business Administration guidelines, CPSC considers impacts that exceed one percent of a firm's revenue to be *potentially* significant. The lowest reported annual revenue for any small domestic firm producing fewer than four crib mattress models was $1.36 million. One percent of annual revenue for the firm is $13,600 ($1,360,000 × 0.01). Consequently, if the costs of modifying their mattresses to comply with the standard exceeded $13,600, the rule could have a significant impact on some small firms. This would include the costs of modifying noncompliant mattresses to comply with the requirements, the loss of revenue that results from removing noncompliant mattresses from their product line, and the cost of third-party testing. For manufacturers or importers with greater revenue, the impact of the proposed would have to be higher than this for the impact to be considered significant.

Given that a substantial number of mattresses already comply with the requirements of the proposed rule, and some of the testing costs are already being borne by firms that certify to the current voluntary standard, the Commission considers it unlikely that the rule would have a significant impact on a substantial number of small entities. However, we request comments on the costs of the proposed rule, or impediments to modifying existing crib mattress products to conform to the proposed rule, especially those that would result in the removal of the mattress product from the market and other impacts of the draft proposed rule on small manufacturers and importers.

E. Other Federal Rules That May Duplicate, Overlap, or Conflict With the Draft Proposed Rule

CPSC staff did not identify any other federal rules that duplicate, overlap, or conflict with the proposed rule.

F. Alternatives Considered To Reduce the Impact on Small Entities

The Commission considered the following alternatives to the proposed rule to reduce the impact on small businesses. The Commission requests comments on these alternatives or other alternatives that could reduce the potential burden on small entities.

1. Adopt ASTM F2933–19 Without Modification

The Commission considered proposing to incorporate by reference ASTM F2933–19, without any modifications, and to direct staff to work with ASTM to improve test methods and the firmness of crib mattresses in a future revision of the voluntary standard. This alternative could reduce the impact of the rule on small businesses, but, according to CPSC staff, the reduction would not be expected to be very significant. As discussed in the IRFA analysis in Tab F of Staff's NPR Briefing Package, and in this preamble, many crib mattresses probably already comply with the proposed standard. The additional testing costs associated with the modifications to ASTM F2933–19 in the proposed rule would only increase the testing costs by $50 to $75 per sample. Moreover, adopting ASTM F2933–19 without modification would not address all of the identified hazard patterns associated with crib mattresses.

2. Small Batch Exemption

Under Section 14(d)(4)(C)(ii) of the CPSA, the Commission cannot ''provide any alternative requirements or exemption'' from third party testing for ''durable infant or toddler products,'' as defined in section 104(f) of the Consumer Product Safety Improvement Act of 2008. Consequently, the Commission cannot create a small batch exemption absent a statutory change.

3. Delay the Effective Date of the Requirements

Typically, the Commission proposes an effective date of 6 months for durable nursery product rules. Six months is generally considered sufficient time for suppliers to come into compliance with a proposed durable infant or toddler product rule, unless specific circumstances evince the need for a longer effective date. Additionally, 6 months from the change in a voluntary standard is the time frame that JPMA uses for its certification program, so compliant manufacturers are used to a 6-month time frame to comply with a modified standard. The Commission proposes a 6-month effective date for a final rule on crib mattresses.

One alternative the Commission will consider to reduce the impact of a mandatory rule on small firms is to set an effective date later than 6 months. Implementing a later effective date could mitigate the effects of the rule on small businesses. For businesses that would choose to exit the crib mattress market, or discontinue certain crib mattress models currently in production (rather than produce conforming products), such a delay might provide them with more time to adjust marketing towards other product offerings, sell inventory, or consider alternative business opportunities. The Commission requests comments on the proposed 6-month effective date.

4. Not Issue a Mandatory Standard

Another option available to the Commission that would reduce the burden on small firms is not to adopt a mandatory standard for crib mattresses. Although this option would eliminate the cost impacts of complying with the proposed rule, failure to issue a mandatory standard for crib mattresses would not adequately address the hazard patterns for crib mattresses, especially for hazard patterns that are not adequately addressed in the voluntary standard.

G. IRFA Conclusion

CPSC staff evaluated the possible impacts of the proposed rule on small entities, as required by the RFA. Staff identified 26 manufacturers and importers of mattress products, 16 of which would be considered small businesses (9 manufacturers and 7 importers). The potential impacts include the costs of modifying mattresses to conform to the requirements, the lost revenue if some models are discontinued, and the costs associated with the third-party testing. The Commission believes it possible

[70] Price estimated from data available on the internet, collected between January 2020 and June 2020.

that the proposed rule could have a significant impact on some small firms, but cannot estimate how many. However, the Commission believes it unlikely that the proposed rule would have a significant impact on a substantial number of small entities. The Commission considered several staff-identified alternatives to the proposed rule, to reduce any adverse impact on small firms. The Commission concludes that each of these alternatives would provide limited relief, or is not available due to statutory limitations. The Commission invites comments, particularly from small businesses, on the cost of making necessary modifications to noncomplying crib mattress models to comply with the proposed rule, and alternatives that could reduce the burden on small businesses.

XIII. Environmental Considerations

The Commission's regulations address whether the agency is required to prepare an environmental assessment or an environmental impact statement. Under these regulations, certain categories of CPSC actions normally have ''little or no potential for affecting the human environment,'' and therefore do not require an environmental assessment or an environmental impact statement. Safety standards providing requirements for products come under this categorical exclusion. 16 CFR 1021.5(c)(1). The NPR for crib mattresses falls within the categorical exclusion.

XIV. Paperwork Reduction Act

This proposed rule for crib mattresses contains information collection requirements that are subject to public comment and review by the Office of Management and Budget (''OMB'') under the Paperwork Reduction Act of 1995 (44 U.S.C. 3501–3521). In this document, pursuant to 44 U.S.C. 3507(a)(1)(D), we set forth:

- A title for the collection of information;
- a summary of the collection of information;
- a brief description of the need for the information and the proposed use of the information;
- a description of the likely respondents and proposed frequency of response to the collection of information;
- an estimate of the burden that shall result from the collection of information; and
- notice that comments may be submitted to the OMB.

Title: Safety Standard for Crib Mattresses.

Description: The proposed rule would require each crib mattress within the scope of the rule to comply with ASTM F2933–19, *Standard Consumer Safety Specification for Crib Mattresses,* including the proposed additional requirements summarized in section VII of this preamble. Section 7 of ASTM F2933–19, and a proposed new section 8 in the NPR, contain requirements for marking, labeling, and instructional literature. These requirements fall within the definition of ''collection of information,'' as defined in 44 U.S.C. 3502(3).

Description of Respondents: Persons who manufacture or import crib mattresses.

Estimated Burden: We estimate the burden of this collection of information as follows:

TABLE 8—ESTIMATED ANNUAL REPORTING BURDEN

16 CFR section	Number of respondents	Frequency of responses	Total annual responses	Hours per response	Total burden hours
1241.2(a), (b)	26	12	312	1	312

Our estimate is based on the following:

The Commission proposes in the NPR modifications to section 7 of ASTM 2933–19, and a new section 8 on instructional literature, to bring the standard into alignment with other safety standards for durable infant or toddler products. For example, in addition to improved warning format and content, proposed modifications to section 7.1.1 of ASTM F2933–19 would require that the name and the place of business (city, state, and mailing address, including zip code) or telephone number of the manufacturer, distributor, or seller be marked clearly and legibly on each product and its retail package. Proposed modifications to section 7.1.2 of ASTM F2933–19 would also require a code mark or other means that identifies the date (month and year, as a minimum) of manufacture. Proposed modifications to section 7.2 of ASTM F2933–19 would require marking and labeling on the product to be permanent.

Twenty-six known entities supply crib mattresses to the U.S. market and these entities may need to make some modifications to existing product labels. We estimate that the time required to make these modifications is about 1 hour per model. Based on an evaluation of supplier product lines, each entity supplies an average of 12 models of crib mattresses;[71] therefore, the estimated burden associated with labels is 1 hour per model × 26 entities × 12 models per entity = 312 hours. We estimate the hourly compensation for the time required to create and update labels is $32.74 (U.S. Bureau of Labor Statistics, ''Employer Costs for Employee Compensation,'' March 2020, total compensation for all sales and office workers in goods-producing private industries: *http://www.bls.gov/ncs/*). Therefore, the estimated annual cost to industry associated with the labeling requirements is $10,214.88 ($32.74 per hour × 312 hours = $10,214.88). No operating, maintenance, or capital costs are associated with the collection.

The NPR also proposes a new section 8 that would require instructions to be supplied with the crib mattress. The instructions would be required to: (a) Be easy to read and understand; (b) include information regarding assembly, maintenance, cleaning, and use, where applicable; and (c) address the same warning and safety-related statements that must appear on the product, with similar formatting requirements, but without the need to be in color. Under the OMB's regulations (5 CFR 1320.3(b)(2)), the time, effort, and financial resources necessary to comply with a collection of information that would be incurred by persons in the ''normal course of their activities'' are excluded from a burden estimate, where an agency demonstrates that the disclosure activities required to comply are ''usual and customary.'' Based on staff's review of product information online, approximately 80 percent of firms that supply cribs to the crib mattress market already provide instructional literature to consumers for

[71] This number was derived during the market research phase of the initial regulatory flexibility analysis by dividing the total number of crib mattresses supplied by all crib mattress suppliers by the total number of crib mattress suppliers.

products intended for use by children. All of the firms which supply crib mattresses already provide customer support for use of their children's products. Therefore, we tentatively estimate that no burden hours are associated with the proposed section 8 of ASTM F2933–19, because any burden associated with supplying instructions with crib mattresses would be ''usual and customary'' and not within the definition of ''burden'' under the OMB's regulations.

Based on this analysis, the proposed standard for crib mattresses would impose a burden to industry of 312 hours at a cost of $10,214.88 annually.

In compliance with the Paperwork Reduction Act of 1995 (44 U.S.C. 3507(d)), we have submitted the information collection requirements of this rule to the OMB for review. Interested persons are requested to submit comments regarding information collection by November 25, 2020, to the Office of Information and Regulatory Affairs, OMB (see the **ADDRESSES** section at the beginning of this document).

Pursuant to 44 U.S.C. 3506(c)(2)(A), we invite comments on:

- Whether the collection of information is necessary for the proper performance of the CPSC's functions, including whether the information will have practical utility;
- the accuracy of the CPSC's estimate of the burden of the proposed collection of information, including the validity of the methodology and assumptions used;
- ways to enhance the quality, utility, and clarity of the information to be collected;
- ways to reduce the burden of the collection of information on respondents, including the use of automated collection techniques, when appropriate, and other forms of information technology; and
- the estimated burden hours associated with label modification, including any alternative estimates.

XV. Preemption

Section 26(a) of the CPSA, 15 U.S.C. 2075(a), states that when a consumer product safety standard is in effect and applies to a product, no state or political subdivision of a state may either establish or continue in effect a standard or regulation that prescribes requirements for the performance, composition, contents, design, finish, construction, packaging, or labeling of such product dealing with the same risk of injury unless the state requirement is identical to the federal standard. Section 26(c) of the CPSA also provides that states or political subdivisions of states may apply to the Commission for an exemption from this preemption under certain circumstances. Section 104(b) of the CPSIA refers to the rules to be issued under that section as ''consumer product safety rules.'' Therefore, the preemption provision of section 26(a) of the CPSA would apply to a rule issued under section 104.

XVI. Request for Comments

This Commission proposes a rule under section 104(b) of the CPSIA to issue a consumer product safety standard for crib mattresses, to amend part 1112 to add crib mattresses to the list of children's product safety rules for which the CPSC has issued an NOR, and to amend part 1130 to identify crib mattresses as a durable infant or toddler product subject to CPSC consumer registration requirements. The Commission requests comments on the proposal to incorporate by reference ASTM F2933–19, with modifications to address mattress firmness, mattress compression, lacerations from coils and springs, dimensional requirements for non-full-size cribs, and improve warnings and instructions. The Commission also requests comments on the proposed effective date; the costs of compliance with, and testing to, the proposed Safety Standard for Crib Mattresses; and any aspect of this proposal. During the comment period, the ASTM F2933–19 Standard Consumer Safety Specification for Crib Mattresses, is available as a read-only document at: *http://www.astm.org/cpsc.htm.*

Comments should be submitted in accordance with the instructions in the **ADDRESSES** section at the beginning of this document.

List of Subjects

16 CFR Part 1112

Administrative practice and procedure, Audit, Consumer protection, Reporting and recordkeeping requirements, Third party conformity assessment body.

16 CFR Part 1130

Administrative practice and procedure, Business and industry, Consumer protection, Reporting and recordkeeping requirements.

16 CFR Part 1241

Consumer protection, Imports, Incorporation by reference, Infants and children, Labeling, Law enforcement, and Mattresses.

For the reasons discussed in the preamble, the Commission proposes to amend Title 16 of the Code of Federal Regulations as follows:

PART 1112—REQUIREMENTS PERTAINING TO THIRD PARTY CONFORMITY ASSESSMENT BODIES

■ 1. The authority citation for part 1112 continues to read as follows:

Authority: 15 U.S.C. 2063; Pub. L. 110–314, section 3, 122 Stat. 3016, 3017 (2008).

■ 2. Amend § 1112.15 by adding paragraph (b)(51) to read as follows:

§ 1112.15 When can a third party conformity assessment body apply for CPSC acceptance for a particular CPSC rule and/or test method?

* * * * *

(b) * * *

(51) 16 CFR part 1241, Safety Standard for Crib Mattresses.

* * * * *

■ 3. The authority citation for part 1130 continues to read as follows:

Authority: 15 U.S.C. 2056a, 2056(b).

■ 4. Amend § 1130.2 by adding paragraph (a)(19) to read as follows:

PART 1130—REQUIREMENTS FOR CONSUMER REGISTRATION OF DURABLE INFANT OR TODDLER PRODUCTS

§ 1130.2 Definitions.

* * * * *

(a) * * *

(19) Crib mattresses.

* * * * *

■ 5. Add part 1241 to read as follows:

PART 1241—SAFETY STANDARD FOR CRIB MATTRESSES

Sec.
1241.1 Scope.
1241.2 Requirements for crib mattresses.

Authority: Sec. 104, Pub. L. 110–314, 122 Stat. 3016 (15 U.S.C. 2056a); Sec. 3, Pub. L. 112–28, 125 Stat. 273.

§ 1241.1 Scope.

This part establishes a consumer product safety standard for crib mattresses. The scope of this standard for crib mattresses includes all crib mattresses within the scope of ASTM F2933, *Standard Consumer Safety Specification for Crib Mattresses,* including: Full-size crib mattresses, non-full-size crib mattresses, and after-market mattresses for play yards and non-full-size cribs.

§ 1241.2 Requirements for crib mattresses.

(a) Except as provided in paragraph (b) of this section, each crib mattress must comply with all applicable provisions of ASTM F2933–19, Standard Consumer Safety Specification for Crib Mattresses (approved on June 15, 2019). The Director of the Federal

Register approves this incorporation by reference in accordance with 5 U.S.C. 552(a) and 1 CFR part 51. You may obtain a copy from ASTM International, 100 Bar Harbor Drive, P.O. Box 0700, West Conshohocken, PA 19428; *http://www.astm.org/cpsc.htm.* Once incorporated by reference, you may review a read-only copy of ASTM F2933–19 at *http://www.astm.org/READINGROOM/.* You may also inspect a copy at the Division of the Secretariat, U.S. Consumer Product Safety Commission, Room 820, 4330 East-West Highway, Bethesda, MD 20814, telephone 301–504–7923, or at the National Archives and Records Administration (NARA). For information on the availability of this material at NARA, call 202–741–6030, or go to: *http://www.archives.gov/federal_register/code_of_federalregulations/ibr_locations.html.*

(b) Comply with ASTM F2933–19 with the following additions or exclusions:

(1) Instead of complying with section 3.1.2 of ASTM F2933–19, comply with the following:

(i) 3.1.2 *Conspicuous,* adj—visible while the mattress is being placed in its intended use position.

(ii) [Reserved]

(2) Add the following paragraph to section 3.1 of ASTM F2933–19:

(i) 3.1.11 *Sleep surface*—The product component, or group of components, providing the horizontal plane, or nearly horizontal plane (≤10°), intended to support an infant during sleep.

(ii) [Reserved]

(3) Instead of complying with section 5.7.1.1 of ASTM F2933–19, comply with the following:

(i) 5.7.1.1 *Mattress Size*—The dimensions of a full-size crib mattress shall measure at least 27¼ in. (690 mm) wide and 51⅝ in. (1310 mm) long. When the mattress is placed against the perimeter and in the corner of the crib, the corner gap shall not exceed 1.75 in. (44.5 mm). Dimensions shall be tested in accordance with 6.2.

(ii) [Reserved]

(4) Instead of complying with section 5.7.2.1 and 5.7.2.2 of ASTM F2933–19, comply with the following:

(i) 5.7.2.1 *Mattress supplied with a non-full-size crib:* Shall meet the specifications of *Mattresses for Rigid sided products* of Consumer Safety Specification ASTM F406 when tested with the non-full-size crib product with which it is supplied.

(ii) 5.7.2.2 *After-market mattresses for non-full-size cribs:* Shall be treated as though the mattresses were ''the mattress supplied with a non-full-size crib'' and shall meet the specifications of *Mattresses for Rigid sided products* in Consumer Safety Specification ASTM F406, when tested to the equivalent interior dimension of the product for which it is intended to be used.

(5) In section 5.9 of ASTM F2933–19, remove the term ''and Non-Full Size Crib.''

(6) In section 5.9.1 of ASTM F2933–19, replace the term ''For Mesh/Fabric Sided Products and Rigid Sided Non-Rectangular Products'' with ''For Mesh/Fabric Sided Play Yard Products.''

(7) In section 5.9.1.2 of ASTM F2933–19, remove the term ''Mattresses for Rigid sided products;''.

(8) In section 5.9.1.3 of ASTM F2933–19, replace the term ''replacement'' with ''after-market.''

(9) Add the following paragraphs to section 5 of ASTM F2933–19:

(i) 5.10 Mattress Firmness.

(ii) 5.10.1 All crib mattresses within the scope of this standard, when tested in accordance with 6.3, the feeler arm shall not contact the sleep surface of the crib mattress.

(iii) 5.11 Coil Springs.

(iv) 5.11.1 When tested in accordance with 6.4, there shall be no exposed coil springs or metal wires. The requirements in this section only pertain to crib mattresses with coil springs.

(10) Renumber section 6.2.2 of ASTM F2933–19 to 6.2.3.

(11) Add the following paragraph to section 6.2.2 of ASTM F2933–19:

(i) 6.2.2 Test Equipment-Mattress Sheet:

(ii) [Reserved]

(12) Renumber section 6.2.2.1 of ASTM F2933–19 to 6.2.3.1.

(13) Add the following paragraph to section 6.2.2.1 of ASTM F2933–19:

(i) 6.2.2.1 The mattress sheet shall be 100% cotton and fitted for the mattress to be tested.

(ii) [Reserved]

(14) Renumber section 6.2.2.2 of ASTM F2933–19 to 6.2.3.2.

(15) Add the following paragraph to section 6.2.2.2 of ASTM F2933–19:

(i) 6.2.2.2 The mattress sheet shall be washed in hot water (50 °C [122 °F] or higher) and dried a minimum of two times on the highest setting using household textile laundering units. This shall be the test mattress sheet.

(ii) [Reserved]

(16) Renumber section 6.2.2.3 of ASTM F2933–19 to 6.2.3.3.

(17) Renumber section 6.2.2.4 of ASTM F2933–19 to 6.2.3.4.

(18) Add the following paragraphs to section 6.2.3 of ASTM F2933–19:

(i) 6.2.3.5 Measure the shortest gap between the mattress and the mattress measuring box at the corner adjoining Walls C and D after the dimensions of the mattress have been recorded. The mattress shall not be moved before or during measurement. This shall be the corner gap measurement.

(ii) 6.2.3.6 Rotate the mattress 180° such that the opposing corner is adjacent to Walls C and D, then repeat 6.2.3.2 and 6.2.3.5.

(iii) 6.2.3.7 The test mattress sheet shall be placed on the mattress such that each sheet edge is wrapped fully around and under the mattress.

(iv) 6.2.3.8 The mattress with test mattress sheet shall be measured following steps 6.2.3.1 through 6.2.3.6. The mattress dimensions shall meet the requirements in 5.7.

(19) Add the following paragraphs as section 6.3 of ASTM F2933–19.

(i) 6.3 Mattress Firmness.

(ii) 6.3.1 *Test Fixture:*

(iii) 6.3.1.1 The fixture, as shown in Fig. 2, shall be a rigid, robust object with a round footprint of diameter 203 ±1 mm, and an overall mass of 5200 ±20 g. The lower edge of the fixture shall have a radius not larger than 1 mm. Overhanging the footprint by 40 ±2 mm shall be a flexible, flat bar of width 12 ±0.2 mm with square-cut ends. This bar may be fashioned from a shortened hacksaw blade. The bar shall rest parallel to the bottom surface of the fixture and shall be positioned at a height of 15 ±0.2 mm above the bottom surface of the fixture. The bar shall lay directly over a radial axis of the footprint (*i.e.,* such that a longitudinal centerline of the bar would pass over the center of the footprint).

(iv) 6.3.1.2 Included on the fixture, but not overhanging the footprint, shall be a linear level that is positioned on a plane parallel to the bar, and in a direction parallel to the bar.

(v) 6.3.1.3 Other parts of the fixture, including any handle arrangement and any clamping arrangement for the bar, shall not comprise more that 30% of the total mass of the fixture, and shall be mounted as concentric and as low as possible.

(vi) 6.3.2 *Test Method:*

(vii) 6.3.2.1 Mattresses that are supplied with a product shall be tested when positioned on that product. Mattresses sold independent of a product, shall be tested on a flat, rigid, horizontal support. After-market mattresses for play yards and non-full-size cribs shall be tested with each brand and model of product it is intended to replace.

(viii) 6.3.2.2 Where a user of a mattress could possibly position either side face up, even if this is not an

intended use, then both sides of the mattress shall be tested.

(ix) 6.3.2.3 Before testing each mattress, the following steps shall be followed:

(A) Verify there is no excess moisture in the mattress, beyond reasonable laboratory humidity levels.

(B) Allow sufficient time per the manufacturer's instructions to fully inflate, if shipped in a vacuum sealed package.

(C) Shake and or agitate the mattress in order to fully aerate and distribute all internal components evenly.

(D) Place the mattress in the manufacturer's recommended use position if there is one, in the supplied product, or on a flat, rigid, horizontal support.

(E) Let the mattress rest for at least 5 minutes.

(F) Mark a longitudinal centerline on the mattress sleep surface, and divide this line in half. This point will be the first test location. Then further divide the two lines on either side of the first test location into halves. These will be the second and third test locations.

(x) 6.3.2.4.

(A) Position the test fixture on each of the test locations, with the footprint of the fixture centered on the location, with the bar extending over the centerline and always pointing at the same end of the mattress sleep surface.

(B) At each test location in turn, rotate the bar to point in the required direction, and gently set the fixture down on the mattress sleep surface, ensuring that the footprint of the fixture does not extend beyond the edge of the mattress. The fixture shall be placed as horizontal as possible, using the level to verify. If the bar makes contact with the top of the mattress sleep surface, even slightly, the mattress is considered to have failed the test.

(C) Repeat Steps (1) and (2) and at the remaining locations identified in 6.3.2.1(6).

(D) Repeat Steps (1) and (2) at a location away from the centerline most likely to fail (*e.g.,* a very soft spot on the sleep surface or at a raised portion of the sleep surface). In the case of testing a raised portion of a sleep surface, position center of the fixture such that the bar is over the raised portion, to simulate the position of an infant's nose.

(E) In the event that the fixture is not resting in a nearly horizontal orientation, repeat the test procedure at that location by beginning again from paragraph (b)(19)(x)(A). However, if the test produces a fail even with the device tilted back away from the bar so as to raise it, then a fail can be recorded.

(20) Add the following paragraphs as section 6.4 of ASTM F2933–19:

(i) 6.4 Coil Spring Test.

(ii) 6.4.1 General—This test consists of dropping a specified weight repeatedly onto the mattress. The test assists in evaluating the structural integrity of a mattress with coil springs.

(iii) 6.4.2 Test Fixture:

(iv) 6.4.2.1 A guided free-fall impacting system machine (which keeps the upper surface of the impact mass parallel to the horizontal surface on which the crib is secured) (See Fig. 3).

(v) 6.4.2.2 A 30-lb (13.6-kg) impact mass (see Fig. 4 and Fig. 5).

(vi) 6.4.2.3 A 6-in. (150-mm) long gauge.

(vii) 6.4.2.4 An enclosed frame measuring 29 inches by 53 inches (737 mm by 1346 mm) for the purpose of restricting mattress movement. When testing full-size mattresses, a full-size crib meeting the requirements of ASTM F1169–19 would suffice.

(viii) 6.4.2.5 A ¾″ piece of plywood or OSB that is rigidly supported along the perimeter.

(ix) 6.4.3 Test Method:

(x) 6.4.3.1 Place the mattress on the wooden support and inside the enclosed frame.

(xi) 6.4.3.2 Position geometric center of the impact mass above the geometric center of the test mattress.

(xii) 6.4.3.3 Adjust the distance between the top surface of the mattress and bottom surface of the impact mass to 6 in. (150 mm) (using the 6-in. (150-mm) long gauge, per 6.4.2.3) when the impact mass is in its highest position. Lock the impactor mechanism at this height and do not adjust the height during impacting to compensate for any change in distance as a result of the mattress compressing or the mattress support deforming or moving during impacting.

(xiii) 6.4.3.4 Allow the 30-lb (13.6-kg) impact mass to fall freely 250 times at the rate of one impact every 4 s. Load retraction shall not begin until at least 2 s after the start of the drop.

(xiv) 6.4.3.5 Repeat the step described in 6.4.3.4 at the other test locations shown in Fig. 6.

(21) Add the following Figures to section 6 of ASTM F2933–19:

BILLING CODE 6355–01–P

[72] Reprinted with permission, from ASTM F1169–19 Standard Consumer Safety Specification for Full-Size Baby Cribs, copyright ASTM International, 100 Barr Harbor Drive, West Conshohocken, PA 19428. A copy of the complete standard may be obtained from ASTM International, *www.astm.org.*

(i) Figure 2.

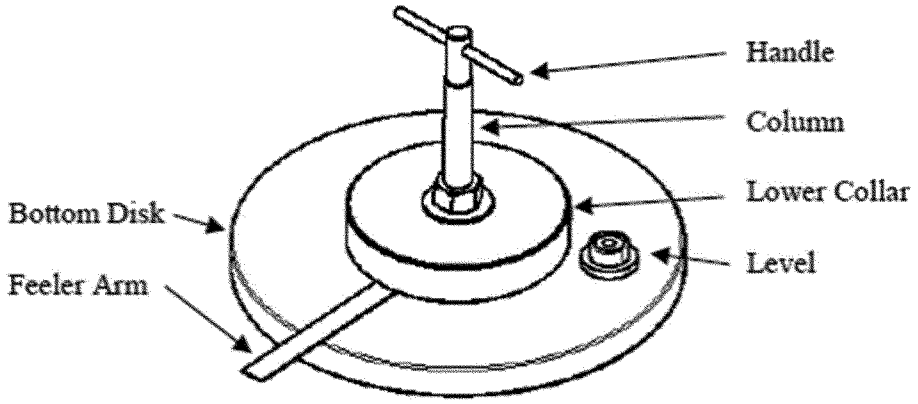

Figure 2. Mattress Firmness Test Fixture

(ii) Figure 3.

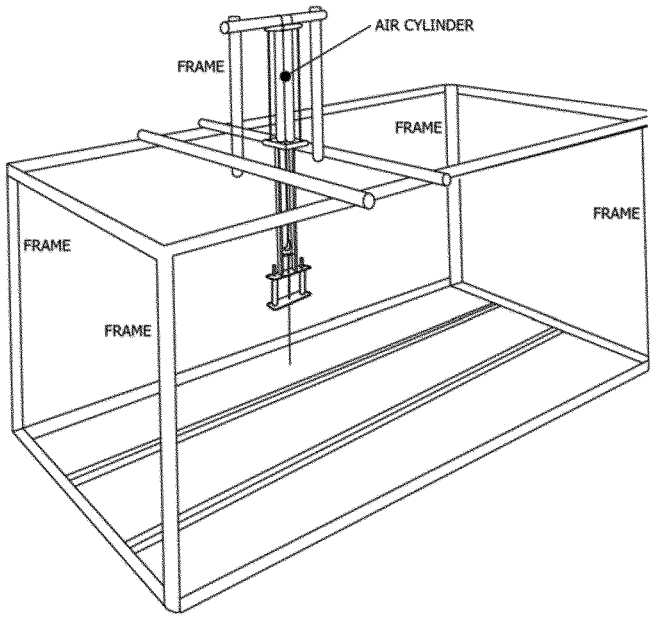

Figure 3. Typical free fall impacting system[72]

(iii) Figure 4.

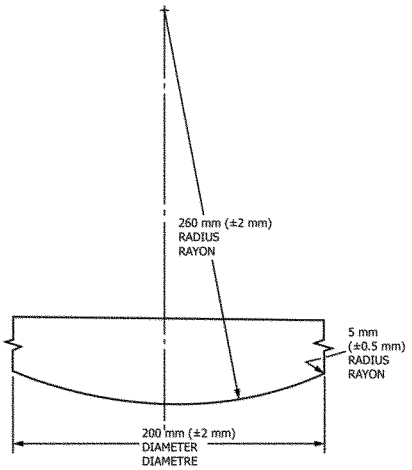

Figure 4. Profile of Impact mass[72]

(iv) Figure 5.

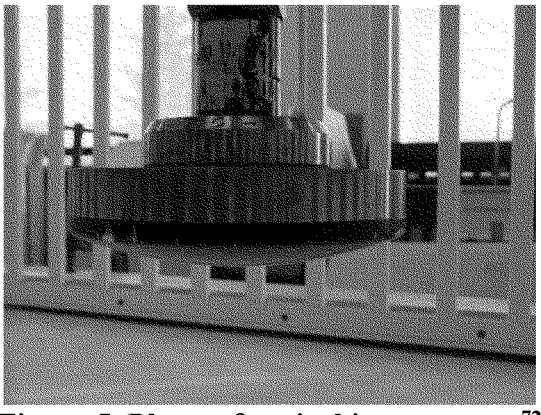

Figure 5. Photo of typical impact mass[72]

(v) Figure 6.

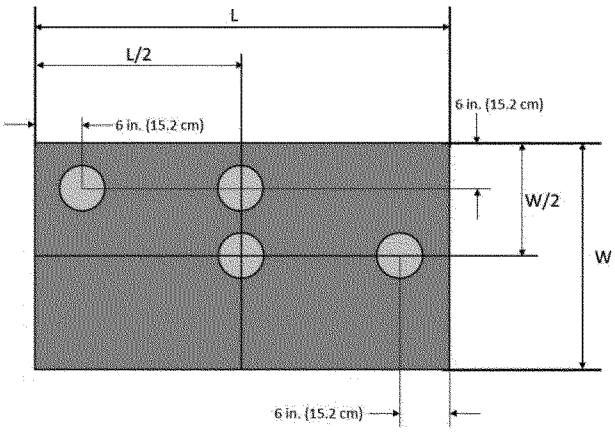

Figure 6. Impact test locations

BILLING CODE 6355–01–C

(22) Instead of complying with sections 7.1 and 7.2 of ASTM F2933–19, comply with the following:

(i) 7.1 Each mattress and its retail package shall be marked or labeled clearly and legibly to indicate the following:

(ii) 7.1.1 The name, place of business (city, state, and mailing address, including zip code), and telephone number of the manufacturer, distributor, or seller.

(iii) 7.1.2 A code mark or other means that identifies the date (month and year at a minimum) of manufacture.

(iv) 7.2 The marking and labeling on the product shall be permanent.

(23) Do not comply with sections 7.2.1, 7.2.2, 7.2.2.1, 7.2.2.2, and 7.2.2.3 of ASTM F2933–19.

(24) Instead of complying with sections 7.3, 7.3.1, 7.3.2, and 7.3.3 of ASTM F2933–19, comply with the following:

(i) 7.3 Any upholstery labeling required by law shall not be used to meet the requirements of this section.

(ii) [Reserved]

(25) Instead of complying with sections 7.4 and 7.4.1 of ASTM F2933–19, comply with the following:

(i) *7.4 Warning Design for Mattresses:*

(ii) 7.4.1 The warnings shall be easy to read and understand and be in the English language at a minimum.

(iii) 7.4.2 Any marking or labeling provided in addition to those required by this section shall not contradict or confuse the meaning of the required information, or be otherwise misleading to the consumer.

(iv) 7.4.3 The warnings shall be conspicuous and permanent.

(v) 7.4.4 The warnings shall conform to ANSI Z535.4—2011, American National Standard for Product Safety Signs and Labels, sections 6.1–6.4, 7.2–7.6.3, and 8.1, with the following changes.

(vi) 7.4.4.1 In sections 6.2.2, 7.3, 7.5, and 8.1.2, replace ''should'' with ''shall.''

(vii) 7.4.4.2 In section 7.6.3, replace ''should (when feasible)'' with ''shall.''

(viii) 7.4.4.3 Strike the word ''safety'' when used immediately before a color (*e.g.,* replace ''safety white'' with ''white'').

(ix) *Note 3*—For reference, ANSI Z535.1 provides a system for specifying safety colors.

(x) 7.4.5 The safety alert symbol ''[Safety Alert Symbol]'' and the signal word ''WARNING'' shall be at least 0.2 in. (5 mm) high. The remainder of the text shall be in characters whose upper case shall be at least 0.1 in. (2.5 mm), except where otherwise specified.

(xi) *Note 4*—For improved warning readability, typefaces with large height-to-width ratios, which are commonly identified as ''condensed,'' ''compressed,'' ''narrow,'' or similar should be avoided.

(xii) 7.4.6 *Message Panel Text Layout:*

(xiii) 7.4.6.1 The text shall be left aligned, ragged right for all but one-line text messages, which can be left aligned or centered.

(xiv) *Note 5*—Left aligned means that the text is aligned along the left margin, and, in the case of multiple columns of text, along the left side of each individual column. Please see FIG. 7 for examples of left aligned text.

(xv) 7.4.6.2 The text in each column needs to be arranged in list or outline format, with precautionary (hazard avoidance) statements preceded by bullet points. Multiple precautionary statements shall be separated by bullet points if paragraph formatting is used.

(xvi) 7.4.7 Example warnings in the format described in this section are shown in FIGS. 8, 9, and 10.

(26) Instead of complying with sections 7.5, 7.5.1, 7.5.2, 7.5.3, 7.5.3.1, and 7.5.3.2 of ASTM F2933–19, comply with the following:

(i) 7.5 Warning Statements—Each mattress shall have warning statements to address the following, at a minimum, unless otherwise specified. The blank in the mattress fit statement beginning with ''If a gap is larger than,'' needs to be filled with ''1⅜ in. (3.5 cm)'' for full-size crib mattresses and ''1 in. (2.5 cm)'' for all other mattresses.

(ii) *Note 6*—Address means that verbiage other than what is shown can be used as long as the meaning is the same or information that is product-specific is presented.

SIDS AND SUFFOCATION HAZARDS

ALWAYS place baby on back to sleep to reduce the risks of SIDS and suffocation.

Babies have suffocated:

- On pillows, comforters, and extra padding
- in gaps between a wrong-size mattress, or extra padding, and side walls of product.

NEVER add soft bedding, padding, or an extra mattress.

USE ONLY one mattress at a time.

DO NOT cover the faces or heads of babies with a blanket or over-bundle them. Overheating can increase the risk of SIDS.

ALWAYS check mattress fit every time you change the sheets, by pushing mattress tight to one corner. Look for any gaps between the mattress and the side walls. If a gap is larger than _____, the mattress does not fit—do not use it.

(iii) Renumber section 7.3.1 of ASTM F2933–19 to section 7.5.1.

(iv) In section 7.5.1, replace the reference to ''7.3'' with a reference to ''7.5.''

(v) In section 7.5.1, replace the term ''Only use'' with the term ''*USE ONLY*.''

(vi) Renumber section 7.3.2 of ASTM F2933–19 to section 7.5.2.

(vii) In section 7.5.2, replace the term ''For non-full-size crib mattresses'' with the term ''For non-full-size crib mattresses and after-market mattresses for play yards and non-full-size cribs.''

(viii) In section 7.5.2, replace the reference to ''7.3'' with a reference to ''7.5.''

(ix) In section 7.5.2, replace the term ''Only use'' with the term ''*USE ONLY*.''

(x) Renumber section 7.3.3 of ASTM F2933–19 to section 7.5.3.

(xi) In section 7.5.3, replace the term ''Additional manufacturers warnings may be included between the warnings specified in 7.3 and 7.4 if desired'' with ''Manufacturers are permitted to include additional warnings between the warnings specified in 7.5 and 7.6 if desired.''

(27) Instead of complying with sections 7.6, 7.6.1, 7.6.1.1, 7.6.1.2, or 7.7 of ASTM F 2933–19, comply with the following:

(i) 7.6 The following warning statement shall be included exactly as stated in this paragraph (b)(27)(i) and shall be located at the bottom of the warnings on each mattress:

DO NOT remove these important safety warnings.

(ii) 7.7 *Additional Marking and Warnings for After-Market Mattresses for Play Yards and Non-Full-Size Cribs*—The mattress shall have:

(iii) 7.7.1 All warnings added by the original manufacturer which are in addition to those required by this standard.

(iv) 7.7.2 Assembly/attachment instructions that were provided on the original mattress.

(v) 7.7.3 The specific brand(s) and model(s) number(s) of the product(s) in which it is intended to be used.

(vi) 7.7.4 *For Rigid Sided Rectangular Products*—the following statement shall appear exactly as stated in this paragraph (b)(27)(vi) (the blanks are to be filled in as appropriate).

This mattress measures _____ long, _____ wide, and _____ thick when measured from seam to seam.

(28) Add the following paragraphs as section 7.8 of ASTM F2933–19:

(i) 7.8 Package Warnings.

(ii) 7.8.1 The warnings and statements are not required on the retail

package if they are on the mattress and are visible in their entirety through the retail package. Cartons and other materials used exclusively for shipping the mattress are not considered retail packaging.

(iii) 7.8.2 Warning Statements—Each mattress' retail package shall have statements to address the following, at a minimum.

(iv) 7.8.2.1 All warnings included in section 7.5, as applicable.

(v) 7.8.2.2 All additional markings and warnings included in section 7.7, as applicable.

(29) Add the following figures to section 7 of ASTM F2933–19:

BILLING CODE 6355–01–P

(i) Figure 7.

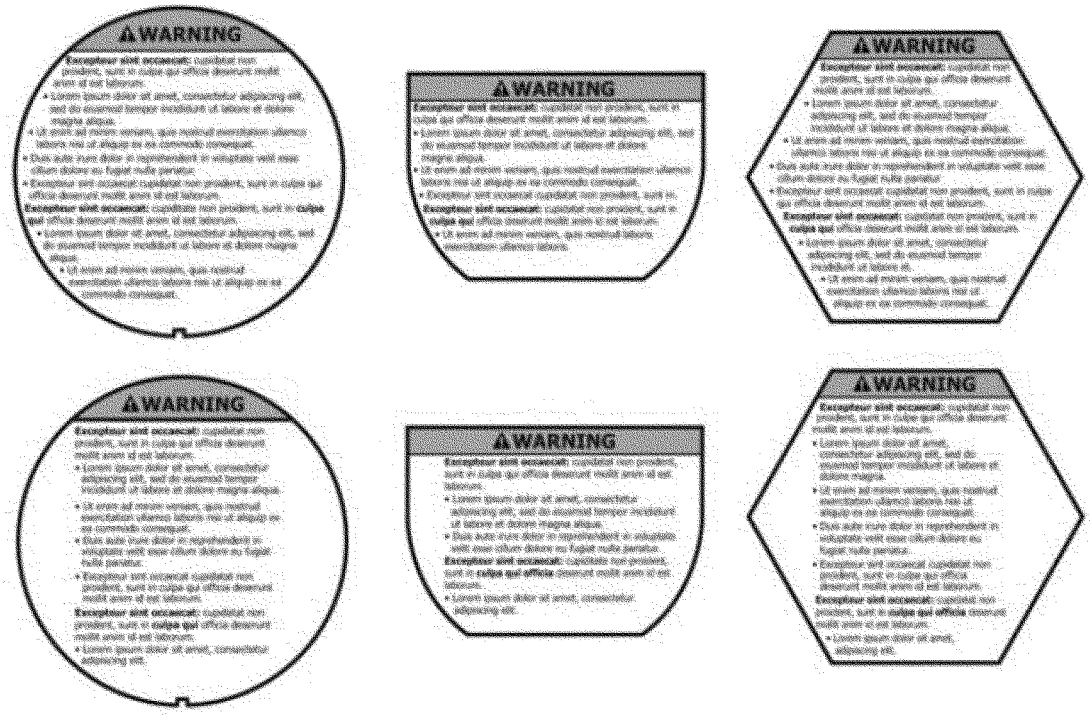

Figure 7. Examples of Left Aligned Text.

(ii) Figure 8.

⚠WARNING

SIDS AND SUFFOCATION HAZARDS

ALWAYS place baby on back to sleep to reduce the risks of SIDS and suffocation.

Babies have suffocated:

- on pillows, comforters, and extra padding
- in gaps between a wrong-size mattress, or extra padding, and side walls of product.

NEVER add soft bedding, padding, or an extra mattress.

USE ONLY one mattress at a time.

DO NOT cover the faces or heads of babies with a blanket or over-bundle them. Overheating can increase the risk of SIDS.

ALWAYS check mattress fit **every time you change the sheets**, by pushing mattress tight to one corner. Look for any gaps between the mattress and the side walls. If a gap is larger than 1 3/8 in. (3.5 cm), the mattress does not fit — **do not** use it.

DO NOT use this mattress in a crib having interior dimensions that exceed 28 5/8 by 53 in. (73 by 135 cm) as measured from the innermost surfaces of the crib.

USE ONLY sheets and mattress pads designed specifically for crib mattresses.

DO NOT remove these important safety warnings.

Figure 8. Example of warning label for Full-Size Crib Mattress.

(iii) Figure 9.

⚠WARNING

SIDS AND SUFFOCATION HAZARDS

ALWAYS place baby on back to sleep to reduce the risks of SIDS and suffocation.

Babies have suffocated:

- on pillows, comforters, and extra padding
- in gaps between a wrong-size mattress, or extra padding, and side walls of product.

NEVER add soft bedding, padding, or an extra mattress.

USE ONLY one mattress at a time.

DO NOT cover the faces or heads of babies with a blanket or over-bundle them. Overheating can increase the risk of SIDS.

ALWAYS check mattress fit **every time you change the sheets**, by pushing mattress tight to one corner. Look for any gaps between the mattress and the side walls. If a gap is larger than 1 in. (2.5 cm), the mattress does not fit — **do not** use it.

USE ONLY sheets and mattress pads designed specifically for this mattress size.

[All warnings added by the original manufacturer which are in addition to those required by this standard.]
[Assembly/attachment instructions that were provided on the original mattress.]
[The specific brand(s) and model(s) number(s) of the product(s) in which the mattress is intended to be used.]

DO NOT remove these important safety warnings.

Figure 9. Example of warning label for After-Market Mattress for Mesh/Fabric Sided Products and Rigid Sided Non-Rectangular Products.
Items italicized in brackets are to be added as appropriate.

(iv) Figure 10.

⚠WARNING

SIDS AND SUFFOCATION HAZARDS

ALWAYS place baby on back to sleep to reduce the risks of SIDS and suffocation.

Babies have suffocated:

- on pillows, comforters, and extra padding
- in gaps between a wrong-size mattress, or extra padding, and side walls of product.

NEVER add soft bedding, padding, or an extra mattress.

USE ONLY one mattress at a time.

DO NOT cover the faces or heads of babies with a blanket or over-bundle them. Overheating can increase the risk of SIDS.

ALWAYS check mattress fit **every time you change the sheets,** by pushing mattress tight to one corner. Look for any gaps between the mattress and the side walls. If a gap is larger than 1 in. (2.5 cm), the mattress does not fit — **do not** use it.

USE ONLY sheets and mattress pads designed specifically for this mattress size.

[All warnings added by the original manufacturer which are in addition to those required by this standard.]

[Assembly/attachment instructions that were provided on the original mattress.]

[The specific brand(s) and model(s) number(s) of the product(s) in which the mattress is intended to be used.]

This mattress measures __ long, __ wide, and __ thick when measured from seam to seam. *[Fill in blanks as appropriate.]*

DO NOT remove these important safety warnings.

Figure 10. Example of warning label for After-Market Mattress for Rigid Sided Rectangular Products.

Items italicized in brackets, and blanks, are to be added or filled in as appropriate.

BILLING CODE 6355–01–C

(30) Renumber section 8 of ASTM F2933–19 to section 9.

(31) Add the following paragraphs to section 8 of ASTM F2933–19:

(i) 8. Instructional Literature.

(ii) 8.1 Instructions shall be provided with the mattress and shall be easy to read and understand, and shall be in the English language, at a minimum. These instructions shall include information on assembly, maintenance, cleaning, and use, where applicable.

(iii) 8.2 The instructions shall have statements to address the following, at a minimum.

(iv) 8.2.1 All warnings included in section 7.5, as applicable.

(v) 8.2.2 All additional markings and warnings included in section 7.7, as applicable.

(vi) 8.3 The warnings in the instructions shall meet the requirements specified in 7.4.4, 7.4.5, and 7.4.6, except that sections 6.4 and 7.2–7.6.3 of ANSI Z535.4 need not be applied. However, the signal word and safety alert symbol shall contrast with the background of the signal word panel, and the cautions and warnings shall contrast with the background of the instructional literature.

(vii) *Note 7*—For example, the signal word, safety alert symbol, and the warnings may be black letters on a white background, white letters on a black background, navy blue letters on an off-white background, or some other high-contrast combination.

(viii) 8.4 Any instructions provided in addition to those required by this section shall not contradict or confuse the meaning of the required information, or be otherwise misleading to the consumer.

(ix) *Note 8*—For additional guidance on the design of warnings for instructional literature, please refer to ANSI Z535.6, *American National Standard: Product Safety Information in Product Manuals, Instructions, and Other Collateral Materials.*

Alberta E. Mills,

Secretary, Consumer Product Safety Commission.

[FR Doc. 2020–22558 Filed 10–23–20; 8:45 am]

BILLING CODE 6355–01–P

FEDERAL REGISTER

Vol. 85 Monday,

No. 207 October 26, 2020

Part IV

Bureau of Consumer Financial Protection

12 CFR Part 1026

Qualified Mortgage Definition Under the Truth in Lending Act (Regulation Z): Extension of Sunset Date; Final Rule

BUREAU OF CONSUMER FINANCIAL PROTECTION

12 CFR Part 1026

[Docket No. CFPB–2020–0021]

Qualified Mortgage Definition Under the Truth in Lending Act (Regulation Z): Extension of Sunset Date

AGENCY: Bureau of Consumer Financial Protection.

ACTION: Final rule; official interpretation.

SUMMARY: With certain exceptions, Regulation Z requires creditors to make a reasonable, good faith determination of a consumer's ability to repay any residential mortgage loan, and loans that meet Regulation Z's requirements for ''qualified mortgages'' (QMs) obtain certain protections from liability. One category of QMs consists of loans that are eligible for purchase or guarantee by either the Federal National Mortgage Association (Fannie Mae) or the Federal Home Loan Mortgage Corporation (Freddie Mac) (collectively, government-sponsored enterprises, or GSEs), while operating under the conservatorship or receivership of the Federal Housing Finance Agency (FHFA). The GSEs are currently under Federal conservatorship. In 2013, the Bureau of Consumer Financial Protection (Bureau) established this category of QMs (Temporary GSE QM loans) as a temporary measure that would expire with respect to each GSE on the date that GSE exits conservatorship, or on January 10, 2021, whichever comes first. In this final rule, the Bureau amends Regulation Z to replace the January 10, 2021 sunset date of the Temporary GSE QM loan definition with a provision stating that the Temporary GSE QM loan definition will be available only for covered transactions for which the creditor receives the consumer's application before the mandatory compliance date of final amendments to the General QM loan definition in Regulation Z. This final rule does not amend the provision stating that the Temporary GSE QM loan definition expires with respect to a GSE when that GSE exits conservatorship.

DATES: This rule is effective December 28, 2020.

FOR FURTHER INFORMATION CONTACT: Ben Cady, Counsel; or David Friend or Priscilla Walton-Fein, Senior Counsels, Office of Regulations, at 202–435–7700. If you require this document in an alternative electronic format, please contact *CFPB_Accessibility@cfpb.gov.*

SUPPLEMENTARY INFORMATION:

I. Summary of the Final Rule

The Ability-to-Repay/Qualified Mortgage Rule (ATR/QM Rule) requires a creditor to make a reasonable, good faith determination of a consumer's ability to repay a residential mortgage loan according to its terms. Loans that meet the ATR/QM Rule's requirements for QMs obtain certain protections from liability. The ATR/QM Rule defines several categories of QMs.

One QM category defined in the ATR/QM Rule is the General QM loan category. General QM loans must comply with the ATR/QM Rule's prohibitions on certain loan features, its points-and-fees limits, and its underwriting requirements. For General QM loans, the ratio of the consumer's total monthly debt to total monthly income (DTI ratio) must not exceed 43 percent. Creditors must calculate, consider, and verify debt and income for purposes of determining the consumer's DTI ratio using the standards contained in appendix Q of Regulation Z.

A second, temporary category of QM loans defined in the ATR/QM Rule consists of mortgages that (1) comply with the same loan-feature prohibitions and points-and-fees limits as General QM loans and (2) are eligible to be purchased or guaranteed by Fannie Mae or Freddie Mac while under the conservatorship of the FHFA. This final rule refers to these loans as Temporary GSE QM loans, and the provision that created this loan category is commonly known as the GSE Patch. Unlike for General QM loans, the ATR/QM Rule does not prescribe a DTI limit for Temporary GSE QM loans. Thus, a loan can qualify as a Temporary GSE QM loan even if the consumer's DTI ratio exceeds 43 percent, as long as the loan is eligible to be purchased or guaranteed by either of the GSEs. In addition, for Temporary GSE QM loans, the ATR/QM Rule does not require creditors to use appendix Q to determine the consumer's income, debt, or DTI ratio.

In 2013, the Bureau provided in the ATR/QM Rule that the Temporary GSE QM loan definition would expire with respect to each GSE when that GSE exits conservatorship or on January 10, 2021, whichever comes first. The GSEs are currently in conservatorship. Despite the Bureau's expectations when the ATR/QM Rule was published in 2013, Temporary GSE QM loan originations continue to represent a large and persistent share of the residential mortgage loan market. A significant number of Temporary GSE QM loans would be affected by the expiration of the Temporary GSE QM loan definition, including loans for which the consumer's DTI ratio is above 43 percent or the creditor's method of documenting and verifying income or debt is incompatible with appendix Q. Based on 2018 data, the Bureau estimates that, as a result of the General QM loan definition's 43 percent DTI limit, approximately 957,000 loans—16 percent of all closed-end first-lien residential mortgage originations in 2018—would be affected by the expiration of the Temporary GSE QM loan definition. These loans are currently originated as QM loans due to the Temporary GSE QM loan definition but would not be originated under the current General QM loan definition, and might not be originated at all, if the Temporary GSE QM loan definition were to expire.

On June 22, 2020, the Bureau issued two proposed rules concerning the ATR/QM Rule. In one of the proposals—referred to in this final rule as the Extension Proposal—the Bureau proposed to extend the Temporary GSE QM loan definition until the effective date of a final rule issued by the Bureau amending the General QM loan definition.[1] In the other proposal—referred to in this final rule as the General QM Proposal—the Bureau proposed amendments to the General QM loan definition.[2] In the General QM Proposal, the Bureau proposed, among other things, to remove the General QM loan definition's DTI limit and replace it with a limit based on the loan's pricing. The Bureau stated that it expected such amendments would allow most loans that currently could receive QM status under the Temporary GSE QM loan definition to receive QM status under the General QM loan definition if they are made after the Temporary GSE QM loan definition expires. Based on 2018 data, the Bureau estimated in the General QM Proposal that 943,000 High-DTI conventional loans would fall outside the QM definitions if there are no changes to the General QM loan definition prior to the expiration of the Temporary GSE QM loan definition but would fall within the General QM loan definition if it were amended as the Bureau proposed. The Bureau stated that, as a result, the General QM Proposal would help to facilitate a smooth and orderly transition away from the Temporary GSE QM loan definition.

On August 18, 2020, the Bureau issued a third proposal concerning the ATR/QM Rule. In that proposal—referred to in this final rule as the Seasoned QM Proposal—the Bureau

[1] 85 FR 41448 (July 10, 2020).

[2] 85 FR 41716 (July 10, 2020).

proposed to create a new category of QMs (Seasoned QMs) for first-lien, fixed-rate covered transactions that meet certain performance requirements over a 36-month seasoning period, are held in portfolio until the end of the seasoning period, comply with general restrictions on product features and points and fees, and meet certain underwriting requirements.[3]

In this final rule, the Bureau amends Regulation Z to replace the January 10, 2021 sunset date of the Temporary GSE QM loan definition with a provision stating that the Temporary GSE QM loan definition will be available only for covered transactions for which the creditor receives the consumer's application before the mandatory compliance date of final amendments to the General QM loan definition in Regulation Z. This final rule does not amend the provision stating that the Temporary GSE QM loan definition expires with respect to a GSE when that GSE exits conservatorship (the conservatorship clause). This final rule does not affect the QM definitions that apply to Federal Housing Administration (FHA), U.S. Department of Veterans Affairs (VA), U.S. Department of Agriculture (USDA), or Rural Housing Service (RHS) loans. The Bureau concludes that this extension of the Temporary GSE QM loan definition's sunset date will ensure that responsible, affordable mortgage credit remains available to consumers who may be affected if the Temporary GSE QM loan definition expires before the amendments to the General QM loan definition take effect.

II. Background

A. Dodd-Frank Act Amendments to the Truth in Lending Act

The Dodd-Frank Wall Street Reform and Consumer Protection Act (Dodd-Frank Act)[4] amended the Truth in Lending Act (TILA)[5] to establish, among other things, ability-to-repay (ATR) requirements in connection with the origination of most residential mortgage loans.[6] The amendments were intended ''to assure that consumers are offered and receive residential mortgage loans on terms that reasonably reflect their ability to repay the loans and that are understandable and not unfair, deceptive or abusive.''[7] As amended, TILA prohibits a creditor from making a residential mortgage loan unless the creditor makes a reasonable and good faith determination based on verified and documented information that the consumer has a reasonable ability to repay the loan.[8]

TILA identifies the factors a creditor must consider in making a reasonable and good faith assessment of a consumer's ability to repay. These factors are the consumer's credit history, current and expected income, current obligations, debt-to-income ratio or residual income after paying non-mortgage debt and mortgage-related obligations, employment status, and other financial resources other than equity in the dwelling or real property that secures the repayment of the loan.[9] A creditor, however, may not be certain whether its ability-to-repay determination is reasonable in a particular case, and it risks liability if a court or an agency, including the Bureau, later concludes that the ability-to-repay determination was not reasonable.

TILA addresses this uncertainty by defining a category of loans—called QMs—for which a creditor ''may presume that the loan has met'' the ATR requirements.[10] The statute generally defines a QM to mean any residential mortgage loan for which:

- The loan does not have negative amortization, interest-only payments, or balloon payments;
- The loan term does not exceed 30 years;
- The total points and fees generally do not exceed 3 percent of the loan amount;
- The income and assets relied upon for repayment are verified and documented;
- The underwriting uses a monthly payment based on the maximum rate during the first five years, uses a payment schedule that fully amortizes the loan over the loan term, and takes into account all mortgage-related obligations; and
- The loan complies with any guidelines or regulations established by the Bureau relating to the ratio of total monthly debt to monthly income or alternative measures of ability to pay regular expenses after payment of total monthly debt.[11]

B. The ATR/QM Rule

In January 2013, the Bureau issued the ATR/QM Rule, which amended Regulation Z to implement TILA's ATR requirements (January 2013 Final Rule).[12] The ATR/QM Rule became effective on January 10, 2014, and the Bureau amended it several times through 2016.[13] The ATR/QM Rule implements the statutory ATR provisions discussed above and defines several categories of QM loans.[14] Under the ATR/QM Rule, a creditor that makes a QM loan is protected from liability presumptively or conclusively, depending on whether the loan is ''higher priced.''[15]

1. General QM Loans

One category of QM loans defined by the ATR/QM Rule consists of General QM loans. A loan is a General QM loan if:

- The loan does not have negative-amortization, interest-only, or balloon-payment features, a term that exceeds 30 years, or points and fees that exceed specified limits;[16]
- The creditor underwrites the loan based on a fully amortizing schedule using the maximum rate permitted during the first five years;[17]
- The creditor considers and verifies the consumer's income and debt obligations in accordance with appendix Q;[18] and
- The consumer's DTI ratio is no more than 43 percent, determined in accordance with appendix Q.[19]

[3] 85 FR 53568 (Aug. 28, 2020).

[4] Public Law 111–203, 124 Stat. 1376 (2010).

[5] 15 U.S.C. 1601 *et seq.*

[6] Dodd-Frank Act sections 1411–12, 1414, 124 Stat. 2142–48, 2149; 15 U.S.C. 1639c.

[7] 15 U.S.C. 1639b(a)(2).

[8] 15 U.S.C. 1639b(a)(1). TILA section 103 defines ''residential mortgage loan'' to mean, with some exceptions including open-end credit plans, ''any consumer credit transaction that is secured by a mortgage deed of trust, or other equivalent consensual security interest on a dwelling or on residential real property that includes a dwelling.'' 15 U.S.C. 1639b(dd)(5). TILA section 129C also exempts certain residential mortgage loans from the ATR requirements. *See, e.g.*, 15 U.S.C. 1639c(a)(8) (exempting reverse mortages and temporary or bridge loans with a term of 12 months or less).

[9] 15 U.S.C. 1639c(a)(3).

[10] 15 U.S.C. 1639c(b)(1).

[11] 15 U.S.C. 1639c(b)(2)(A).

[12] 78 FR 6408 (Jan. 30, 2013).

[13] *See* 78 FR 35429 (June 12, 2013); 78 FR 44686 (July 24, 2013); 78 FR 60382 (Oct. 1, 2013); 79 FR 65300 (Nov. 3, 2014); 80 FR 59944 (Oct. 2, 2015); 81 FR 16074 (Mar. 25, 2016).

[14] 12 CFR 1026.43(c), (e).

[15] The ATR/QM Rule generally defines a ''higher-priced'' covered transaction for General QM loans and for Temporary GSE QM loans to mean a first-lien mortgage with an annual percentage rate (APR) that exceeds the average prime offer rate (APOR) for a comparable transaction as of the date the interest rate is set by 1.5 or more percentage points; or a subordinate-lien transaction with an APR that exceeds APOR for a comparable transaction as of the date the interest rate is set by 3.5 or more percentage points. 12 CFR 1026.43(b)(4). A creditor that makes a QM loan that is not ''higher priced'' is entitled to a conclusive presumption that it has complied with the ATR/QM Rule—*i.e.,* the creditor receives a safe harbor. 12 CFR 1026.43(e)(1)(i). A creditor that makes a QM loan that is ''higher priced'' is entitled to a rebuttable presumption that it has complied with the ATR/QM Rule. 12 CFR 1026.43(e)(1)(ii).

[16] 12 CFR 1026.43(e)(2)(i) through (iii).

[17] 12 CFR 1026.43(e)(2)(iv).

[18] 12 CFR 1026.43(e)(2)(v).

[19] 12 CFR 1026.43(e)(2)(vi).

Appendix Q contains standards for calculating and verifying debt and income for purposes of determining whether a mortgage satisfies the 43 percent DTI limit for General QM loans. The standards in appendix Q were adapted from guidelines maintained by FHA when the January 2013 Final Rule was issued.[20] Appendix Q addresses how to determine a consumer's employment-related income (*e.g.,* income from wages, commissions, and retirement plans); non-employment related income (*e.g.,* income from alimony and child support payments, investments, and property rentals); and liabilities, including recurring and contingent liabilities and projected obligations.[21]

2. Temporary GSE QM Loans

A second, temporary category of QM loans defined by the ATR/QM Rule, Temporary GSE QM loans, consists of mortgages that (1) comply with the ATR/QM Rule's prohibitions on certain loan features and its limitations on points and fees [22] and (2) are eligible to be purchased or guaranteed by either GSE while under the conservatorship of the FHFA.[23] Unlike for General QM loans, Regulation Z does not prescribe a DTI limit for Temporary GSE QM loans. Thus, a loan can qualify as a Temporary GSE QM loan even if the DTI ratio exceeds 43 percent, as long as the DTI ratio meets the applicable GSE's DTI requirements and other underwriting criteria. In addition, income, debt, and DTI ratios for such loans generally are verified and calculated using GSE standards, rather than appendix Q. The January 2013 Final Rule provided that the Temporary GSE QM loan definition—also known as the GSE Patch—would expire with respect to each GSE when that GSE exits conservatorship or on January 10, 2021, whichever comes first.[24]

C. The Bureau's Assessment of the ATR/QM Rule

Section 1022(d) of the Dodd-Frank Act requires the Bureau to assess each of its significant rules and orders and to publish a report of each assessment within five years of the effective date of the rule or order.[25] The Bureau noted in the January 2013 Final Rule that its section 1022(d) assessment of the ATR/QM Rule would provide an opportunity to analyze the Temporary GSE QM loan definition and confirm, prior to its expiration, whether it would be appropriate to allow it to expire.[26] The Bureau published its report as a result of its assessment on January 11, 2019 (Assessment Report).[27]

D. Effects of the COVID–19 Pandemic on Mortgage Markets

The COVID–19 pandemic has had a significant effect on the U.S. economy. In the early months of the pandemic, economic activity contracted, millions of workers became unemployed, and mortgage markets were affected. In recent months, there has been a significant rebound in mortgage-origination activity, buoyed by historically low interest rates and by an increasingly large share of government and GSE-backed loans. However, origination activity outside the government and GSE-backed origination channels has declined significantly, and mortgage-credit availability for many consumers—including those who would be dependent on the non-QM market for financing—remains tight. The pandemic's impact on both the secondary market for new originations and on the servicing of existing mortgages is described below.

1. Secondary Market Impacts and Implications for Mortgage Origination Markets

The early economic disruptions associated with the COVID–19 pandemic restricted the flow of credit in the U.S. economy, particularly as tensions and uncertainty rose in mid-March 2020, and investors moved rapidly towards cash and government securities.[28] The lack of investor demand to purchase mortgages, combined with a large supply of agency mortgage-backed securities (MBS) entering the market,[29] resulted in widening spreads between the rates on a 10-year Treasury note and mortgage interest rates.[30] This dynamic made it difficult for creditors to originate loans, as many creditors rely on the ability to profitably sell loans in the secondary market to generate the liquidity to originate new loans. This resulted in mortgages becoming more expensive for both homebuyers and homeowners looking to refinance. After the actions taken by the Federal Reserve Board of Governors (Board) in March 2020 to purchase agency MBS ''in the amounts needed to support smooth market functioning and effective transmission of monetary policy to broader financial conditions and the economy,'' [31] market conditions have improved substantially.[32] This has helped to tighten interest rate spreads, which stabilizes mortgage rates, resulting in a decline in mortgage rates since the Board's intervention and in a significant increase in refinance activity.

However, non-agency MBS [33] are generally perceived by investors as riskier than agency MBS. As a result, private capital has remained tight and non-agency mortgage credit, including non-QM lending, has declined. Issuance of non-agency MBS declined by 8.2 percent in the first quarter of 2020, with nearly all the transactions completed in January and February before the COVID–19 pandemic began to affect the economy significantly.[34] Nearly all major non-QM creditors ceased making loans in March and April 2020. Beginning in May 2020, issuers of non-

[20] 78 FR 6408, 6527–28 (Jan. 30, 2013) (noting that appendix Q incorporates, with certain modifications, the definitions and standards in HUD Handbook 4155.1, Mortgage Credit Analysis for Mortgage Insurance on One- to Four-Unit Mortgage Loans).

[21] 12 CFR 1026, appendix Q.

[22] 12 CFR 1026.43(e)(2)(i) through (iii).

[23] 12 CFR 1026.43(e)(4).

[24] 12 CFR 1026.43(e)(4)(iii)(B). The ATR/QM Rule created several additional categories of QM loans. The ATR/QM Rule provided that mortgages eligible to be insured or guaranteed (as applicable) by HUD, VA, USDA, and RHS were QMs. 12 CFR 1026.43(e)(4)(ii)(B) through (E). The ATR/QM Rule stated that these provisions would expire on the effective date of rules issued by each of these agencies pursuant to their authority under TILA to define a QM. 12 CFR 1026.43(e)(4)(iii)(A). Because each of these agencies has issued such a rule, these provisions have expired. *See, e.g.,* 24 CFR 203.19 (HUD rule). Other categories of QM loans provide more flexible standards for certain loans originated by certain small creditors. 12 CFR 1026.43(e)(5), (f); *cf.* 12 CFR 1026.43(e)(6) (applicable only to covered transactions for which the application was received before April 1, 2016).

[25] 12 U.S.C. 5512(d).

[26] 78 FR 6408, 6533–34 (Jan. 30, 2013).

[27] Bureau of Consumer Fin. Prot., *Ability-to-Repay and Qualified Mortgage Rule Assessment Report* (Jan. 2019), 2019) (Assessment Report), *https://files.consumerfinance.gov/f/documents/cfpb_ability-to-repay-qualified-mortgage_assessment-report.pdf.*

[28] *The Quarterly CARES Act Report to Congress: Hearing Before the S. Comm. on Banking, Housing, and Urban Affairs,* 116th Cong. 2–3 (2020) (statement of Jerome H. Powell, Chairman, Board of Governors of the Federal Reserve System).

[29] Agency MBS are backed by loans guaranteed by Fannie Mae, Freddie Mac, and the Government National Mortgage Association (Ginnie Mae).

[30] Laurie Goodman *et al.,* Urban Inst., *Housing Finance at a Glance, Monthly Chartbook* (Mar. 26, 2020), *https://www.urban.org/sites/default/files/publication/101926/housing-finance-at-a-glance-a-monthly-chartbook-march-2020.pdf.*

[31] Press Release, Bd. of Governors of the Fed. Reserve Sys., *Federal Reserve announces extensive new measures to support the economy* (Mar. 23, 2020), *https://www.federalreserve.gov/newsevents/pressreleases/monetary20200323b.htm.*

[32] *The Quarterly CARES Act Report to Congress: Hearing Before the S. Comm. on Banking, Housing, and Urban Affairs,* 116th Cong. 3 (2020) (statement of Jerome H. Powell, Chairman, Board of Governors of the Federal Reserve System).

[33] Non-agency MBS are not backed by loans guaranteed by Fannie Mae, Freddie Mac or Ginnie Mae. This includes securities collateralized by non-QM loans.

[34] Brandon Ivey, *Non-Agency MBS Issuance Slowed in First Quarter* (Apr. 3, 2020), *https://www.insidemortgagefinance.com/articles/217623-non-agency-mbs-issuance-slowed-in-first-quarter.*

agency MBS began to test the market with deals collateralized by non-QM loans largely originated prior to the pandemic, and investor demand for these securitizations has begun to recover. However, no securitization has been completed that is predominantly collateralized by non-QM loans originated since the pandemic began.[35] As a result, many non-QM creditors—which largely depend on the ability to sell loans in the secondary market in order to fund new loans—have begun to resume originations, albeit with a tighter credit box.[36] Prime jumbo financing dropped nearly 22 percent in the first quarter of 2020. Banks increased interest rates and narrowed the product offerings such that only consumers with pristine credit profiles were eligible, as these loans must be held in portfolio when the secondary market for non-agency MBS contracts.[37]

The GSEs and government agencies continue to play a dominant role in the market recovery, with the GSE share of first-lien mortgage originations at 65.2 percent in the second quarter of 2020, up from 42.1 percent in the second quarter of 2019 and the FHA and VA share growing to 21.1 percent from 17.7 percent a year prior, according to an analysis by the Urban Institute. Portfolio lending declined to 12.7 percent in the second quarter of 2020, down from 38.6 percent in the second quarter of 2019, and private label securitizations declined to 1 percent from 1.6 percent a year prior.[38]

2. Servicing Market Impacts and Implications for Origination Markets

In addition to the direct impact on origination volume and composition, the pandemic's impact on the mortgage servicing market has downstream effects on mortgage originations as many of the same entities both originate and service mortgages. Anticipating that a number of homeowners would struggle to pay their mortgages due to the pandemic and related economic impacts, Congress passed and the President signed into law the Coronavirus Aid, Relief, and Economic Security Act (CARES Act)[39] in March 2020. The CARES Act provides additional protections for borrowers whose mortgages are purchased or securitized by a GSE and certain federally backed mortgages. The CARES Act mandated a 60-day foreclosure moratorium for such mortgages, which has since been extended by the agencies until the end of the year.[40] The CARES Act also allows borrowers to request up to 180 days of forbearance due to a COVID–19-related financial hardship, with an option to extend the forbearance period for an additional 180 days.

Following the passage of the CARES Act, some mortgage servicers remain obligated to make some principal and interest payments to investors in GSE and Ginnie Mae securities, even if consumers are not making payments.[41] Servicers also remain obligated to make escrowed real estate tax and insurance payments to local taxing authorities and insurance companies. While servicers are required to hold liquid reserves to cover anticipated advances, significantly higher-than-expected forbearance rates over an extended period of time may lead to liquidity shortages, particularly among many non-bank servicers. According to a weekly survey from the Mortgage Bankers Association, while forbearance rates remain elevated at 6.32 percent for the week ending October 4, 2020, they have decreased since reaching their high of 8.55 percent on June 7, 2020.[42]

Because many mortgage servicers also originate the loans they service, many creditors, as well as several warehouse providers,[43] initially responded to the risk of elevated forbearances and higher-than-expected monthly advances by imposing credit overlays—*i.e.,* additional underwriting standards—for new originations. These new underwriting standards include more stringent requirements for non-QM, jumbo, and government loans.[44] The GSEs also imposed an ''adverse market fee'' of 50 basis points on most refinances, effective for new originations delivered to the GSEs on or after December 1, 2020, to cover projected losses due to forbearances, the foreclosure moratoriums, and other default servicing expenses.[45] However, due to refinance origination profits resulting from historically low interest rates, the leveling off in forbearance rates, and actions taken at the Federal level to alleviate servicer liquidity pressure,[46] concerns over non-bank liquidity and related credit overlays have begun to ease.[47] While the non-QM market has begun to recover, it is unclear how quickly non-banks who originate non-QM loans will fully return

[35] Brandon Ivey, *Non-Agency MBS Issuance Slow in Mid-August* (Aug. 21, 2020), *https://www.insidemortgagefinance.com/articles/218973-non-agency-mbs-issuance-slow-in-mid-august.*

[36] Brandon Ivey, *Non-Agency Mortgage Securitization Opening Up After Pause* (May 14, 2020), *https://www.insidemortgagefinance.com/articles/218034-non-agency-mortgage-securitization-opening-up-after-pause.*

[37] Brandon Ivey, *Jumbo Originations Drop Nearly 22% in First Quarter* (May 15, 2020) *https://www.insidemortgagefinance.com/articles/218028-jumbo-originations-drop-nearly-22-in-first-quarter.*

[38] Laurie Goodman *et al.,* Urban Inst., *Housing Finance at a Glance, Monthly Chartbook* (Aug. 27, 2020), *https://www.urban.org/sites/default/files/publication/102776/august-chartbook-2020.pdf.*

[39] Public Law 116–136, 134 Stat. 281 (2020) (includes loans backed by HUD, USDA, VA, Fannie Mae, and Freddie Mac).

[40] *See, e.g.,* Fed. Hous. Fin. Agency, *FHFA Extends Foreclosure and REO Eviction Moratoriums* (Aug. 27, 2020), *https://www.fhfa.gov/Media/PublicAffairs/Pages/FHFA-Extends-Foreclosure-and-REO-Eviction-Moratoriums.aspx;* Press Release, U.S. Dep't of Hous. & Urban Dev., *FHA Extends Foreclosure And Eviction Moratorium For Homeowners Through Year End* (Aug. 27, 2020), *https://www.hud.gov/press/press_releases_media_advisories/HUD_No_20_134;* Veterans Benefits Admin., *Extended Foreclosure Moratorium for Borrowers Affected by COVID–19* (Aug. 24, 2020), *https://www.benefits.va.gov/HOMELOANS/documents/circulars/26-20-30.pdf;* Rural Dev., U.S. Dep't of Agric., *Extension of Foreclosure and Eviction Moratorium for Single Family Housing Direct Loans* (Aug. 28, 2020), *https://content.govdelivery.com/accounts/USDARD/bulletins/29c3a9e.*

[41] The GSEs typically repurchase loans out of the trust after they fall 120 days delinquent, after which the servicer is no longer required to advance principal and interest, but Ginnie Mae requires servicers to advance principal and interest until the default is resolved. On April 21, 2020, the FHFA confirmed that servicers of GSE loans will only be required to advance four months of mortgage payments, regardless of whether the GSEs repurchase the loans from the trust after 120 days of delinquency. Fed. Hous. Fin. Agency, *FHFA Addresses Servicer Liquidity Concerns, Announces Four Month Advance Obligation Limit for Loans in Forbearance* (Apr. 21, 2020), *https://www.fhfa.gov/Media/PublicAffairs/Pages/FHFA-Addresses-Servicer-Liquidity-Concerns-Announces-Four-Month-Advance-Obligation-Limit-for-Loans-in-Forbearance.aspx.*

[42] Press Release, Mortg. Bankers Ass'n, *Share of Mortgage Loans in Forbearance Declines to 6.32%* (Oct. 12, 2020), *https://www.mba.org/2020-press-releases/october/share-of-mortgage-loans-in-forbearance-declines-to-632.*

[43] Warehouse providers are creditors that provide financing to mortgage originators and servicers to fund and service loans.

[44] Maria Volkova, *FHA/VA Lenders Raise Credit Score Requirements* (Apr. 3, 2020), *https://www.insidemortgagefinance.com/articles/217636-fhava-lenders-raise-fico-credit-score-requirements.*

[45] Press Release, Fed. Hous. Fin. Agency, *Adverse Market Refinance Fee Implementation now December 1* (Aug. 25, 2020), *https://www.fhfa.gov/Media/PublicAffairs/Pages/Adverse-Market-Refinance-Fee-Implementation-Now-December-1.aspx.*

[46] On April 10, 2020, Ginnie Mae released guidance on a Pass-Through Assistance Program whereby Ginnie Mae will provide financial assistance at a fixed interest rate to servicers facing a principal and interest shortfall as a last resort. *All Participant Memorandum (APM) 20–03, https://www.ginniemae.gov/issuers/program_guidelines/Pages/mbsguideapmslibdisppage.aspx?ParamID=105.* On April 7, 2020, Ginnie Mae also announced approval of a servicing advance financing facility, whereby mortgage servicing rights are securitized and sold to private investors. Press Release, *Ginnie Mae approves private market servicer liquidity facility, https://www.ginniemae.gov/newsroom/Pages/PressReleaseDispPage.aspx?ParamID=194.*

[47] Brandon Ivey, *Non-QM Lenders Regaining Footing* (July 24, 2020), *https://www.insidemortgagefinance.com/articles/218696-non-qm-lenders-regaining-footing-with-a-positive-outlook* (on file).

to their pre-pandemic level of operations and loan production.

III. Summary of the Rulemaking Process

The Bureau has solicited and received substantial public and stakeholder input on issues related to the substance of this final rule. In addition to the Bureau's discussions with and communications from industry stakeholders, consumer advocates, other Federal agencies,[48] and members of Congress, the Bureau issued requests for information (RFIs) in 2017 and 2018 and in July 2019 issued an advance notice of proposed rulemaking regarding the ATR/QM Rule (ANPR). The Bureau issued the Extension Proposal and the General QM Proposal on June 22, 2020 and the Seasoned QM Proposal on August 18, 2020.

A. The Requests for Information

In June 2017, the Bureau published an RFI in connection with the Assessment Report (Assessment RFI).[49] In response to the Assessment RFI, the Bureau received approximately 480 comments from creditors, industry groups, consumer advocacy groups, and individuals.[50] The comments addressed a variety of topics, including the General QM loan definition and the 43 percent DTI limit; perceived problems with, and potential changes and alternatives to, appendix Q; and how the Bureau should address the expiration of the Temporary GSE QM loan definition. The comments expressed a range of ideas for addressing the expiration of the Temporary GSE QM loan definition. Some commenters recommended making the definition permanent or extending it for various periods of time. Other comments stated that the Temporary GSE QM loan definition should be eliminated or permitted to expire.

Beginning in January 2018, the Bureau issued a general call for evidence seeking comment on its enforcement, supervision, rulemaking, market monitoring, and financial education activities.[51] As part of the call for evidence, the Bureau published requests for information relating to, among other things, the Bureau's rulemaking process,[52] the Bureau's adopted regulations and new rulemaking authorities,[53] and the Bureau's inherited regulations and inherited rulemaking authorities.[54] In response to the call for evidence, the Bureau received comments on the ATR/QM Rule from stakeholders, including consumer advocacy groups and industry groups. The comments addressed a variety of topics, including the General QM loan definition, appendix Q, and the Temporary GSE QM loan definition. The comments also raised concerns about, among other things, the risks of allowing the Temporary GSE QM loan definition to expire without any changes to the General QM loan definition or appendix Q. The concerns raised in these comments were similar to those raised in response to the Assessment RFI, discussed above.

B. The ANPR

On July 25, 2019, the Bureau issued the ANPR.[55] The ANPR stated the Bureau's tentative plans to allow the Temporary GSE QM loan definition to expire in January 2021 or after a short extension, if necessary, to facilitate a smooth and orderly transition away from the Temporary GSE QM loan definition. The Bureau also stated that it was considering whether to propose revisions to the General QM loan definition in light of the potential expiration of the Temporary GSE QM loan definition and requested comments on several topics related to the General QM loan definition, including whether and how the Bureau should revise the DTI limit in the General QM loan definition; whether the Bureau should supplement or replace the DTI limit with another method for directly measuring a consumer's personal finances; whether the Bureau should revise appendix Q or replace it with other standards for calculating and verifying a consumer's debt and income; and whether, instead of a DTI limit, the Bureau should adopt standards that do not directly measure a consumer's personal finances.[56] The Bureau requested comment on how much time industry would need to change its practices in response to any revisions the Bureau makes to the General QM loan definition.[57] The Bureau received 85 comments on the ANPR from businesses in the mortgage industry (including creditors), consumer advocacy groups, elected officials, individuals, and research centers.

C. The Extension Proposal, General QM Proposal, and Seasoned QM Proposal

The Bureau issued the Extension Proposal and the General QM Proposal on June 22, 2020. In the Extension Proposal, the Bureau proposed to replace the January 10, 2021 sunset date of the Temporary GSE QM loan definition with a provision that extends the Temporary GSE QM loan definition until the effective date of final amendments to the General QM loan definition in Regulation Z (*i.e.,* a final rule relating to the General QM Proposal). The Bureau did not propose to amend the conservatorship clause. The comment period for the Extension Proposal ended on August 10, 2020.

In the General QM Proposal, the Bureau proposed, among other things, to remove the General QM loan definition's DTI limit and replace it with a limit based on the loan's pricing. Under the proposal, a loan would meet the General QM loan definition in § 1026.43(e)(2) only if the APR exceeds APOR for a comparable transaction by less than two percentage points as of the date the interest rate is set. The Bureau proposed higher thresholds for loans with smaller loan amounts and subordinate-lien transactions. The Bureau also proposed to retain the existing product-feature and underwriting requirements and limits on points and fees. Although the Bureau proposed to remove the 43 percent DTI limit from the General QM loan definition, the General QM Proposal would require that the creditor consider and verify the consumer's income or assets, debt obligations, alimony, child support, and monthly DTI ratio or residual income. The Bureau proposed to remove appendix Q. To mitigate the uncertainty that may result from appendix Q's removal, the General QM Proposal would clarify the requirements to consider and verify a consumer's income, assets, debt obligations, alimony, and child support. The Bureau proposed to preserve the current threshold separating safe harbor from rebuttable presumption QMs, under which a loan is a safe harbor QM if its APR exceeds APOR for a comparable transaction by less than 1.5 percentage

[48] The Bureau has consulted with agencies including the FHFA, the Board, FHA, the Federal Deposit Insurance Corporation, the Office of the Comptroller of the Currency, the Federal Trade Commission, the National Credit Union Administration, and the Department of the Treasury.

[49] 82 FR 25246 (June 1, 2017).

[50] *See* Assessment Report, *supra* note 27, at appendix B (summarizing comments received in response to the Assessment RFI).

[51] *See* Bureau of Consumer Fin. Prot., *Call for Evidence, https://www.consumerfinance.gov/policy-compliance/notice-opportunities-comment/archive-closed/call-for-evidence* (last updated Apr. 17, 2018).

[52] 83 FR 10437 (Mar. 9, 2018).

[53] 83 FR 12286 (Mar. 21, 2018).

[54] 83 FR 12881 (Mar. 26, 2018).

[55] 84 FR 37155 (July 31, 2019).

[56] *Id.* at 37155, 37160–62.

[57] *Id.* at 37162. The Bureau stated that if the answer to this question depends on how the Bureau revises the definition, the Bureau requested answers based on alternative possible definitions.

points as of the date the interest rate is set (or by less than 3.5 percentage points for subordinate-lien transactions).

Although the Bureau proposed to remove the 43 percent DTI limit and adopt a price-based approach for the General QM loan definition, the Bureau also requested comment on two alternative approaches: (1) Retaining the DTI limit and increasing it to a specific threshold between 45 percent and 48 percent or (2) using a hybrid approach involving both pricing and a DTI limit, such as applying a DTI limit to loans that are above specified rate spreads. Under these alternative approaches, creditors would not be required to verify debt and income using appendix Q.

The Bureau stated in the General QM Proposal that it expected such amendments would allow most loans that currently could receive QM status under the Temporary GSE QM loan definition to receive QM status under the General QM loan definition if they are made after the Temporary GSE QM loan definition expires.[58] The Bureau stated that, as a result, the General QM Proposal would help to facilitate a smooth and orderly transition away from the Temporary GSE QM loan definition. The Bureau proposed that the effective date of a final rule relating to the General QM Proposal would be six months after publication of the final rule in the **Federal Register**. The revised regulations would apply to covered transactions for which creditors receive an application on or after this effective date. The comment period for the General QM Proposal ended on September 8, 2020.

On August 18, 2020, the Bureau issued the Seasoned QM Proposal. The Bureau proposed to create a new category of QMs for first-lien, fixed-rate covered transactions that have met certain performance requirements over a 36-month seasoning period, are held in portfolio until the end of the seasoning period, comply with general restrictions on product features and points and fees, and meet certain underwriting requirements.[59] The Bureau stated that the primary objective of the Seasoned QM Proposal was to ensure access to responsible, affordable mortgage credit by adding a Seasoned QM definition to the existing QM definitions. The Bureau proposed that a final rule relating to the Seasoned QM Proposal would take effect on the same date as a final rule relating to the General QM Proposal. Under the Seasoned QM Proposal—as under the General QM Proposal—the revised regulations would apply to covered transactions for which creditors receive an application on or after this effective date. Thus, due to the 36-month seasoning period, no loan would be eligible to become a Seasoned QM until at least 36 months after the effective date of a final rule relating to the Seasoned QM Proposal. The comment period for the Seasoned QM Proposal was extended to October 1, 2020.[60]

IV. Legal Authority

The Bureau is issuing this final rule pursuant to its authority under TILA and the Dodd-Frank Act. Section 1061 of the Dodd-Frank Act transferred to the Bureau the ''consumer financial protection functions'' previously vested in certain other Federal agencies, including the Board. The Dodd-Frank Act defines the term ''consumer financial protection function'' to include ''all authority to prescribe rules or issue orders or guidelines pursuant to any Federal consumer financial law, including performing appropriate functions to promulgate and review such rules, orders, and guidelines.'' [61] Title X of the Dodd-Frank Act (including section 1061), along with TILA and certain subtitles and provisions of title XIV of the Dodd-Frank Act, are Federal consumer financial laws.[62]

Section 105(a) of TILA directs the Bureau to prescribe regulations to carry out the purposes of TILA and states that such regulations may contain such additional requirements, classifications, differentiations, or other provisions and may further provide for such adjustments and exceptions for all or any class of transactions that the Bureau judges are necessary or proper to effectuate the purposes of TILA, to prevent circumvention or evasion thereof, or to facilitate compliance therewith.[63] A purpose of TILA is ''to assure a meaningful disclosure of credit terms so that the consumer will be able to compare more readily the various credit terms available to him and avoid the uninformed use of credit.'' [64] Additionally, a purpose of TILA sections 129B and 129C is to assure that consumers are offered and receive residential mortgage loans on terms that reasonably reflect their ability to repay the loans and that are understandable and not unfair, deceptive, or abusive.[65] As discussed in the section-by-section analysis below, the Bureau is issuing certain provisions of this final rule pursuant to its rulemaking, adjustment, and exception authority under TILA section 105(a).

Section 129C(b)(3)(B)(i) of TILA authorizes the Bureau to prescribe regulations that revise, add to, or subtract from the criteria that define a QM upon a finding that such regulations are necessary or proper to ensure that responsible, affordable mortgage credit remains available to consumers in a manner consistent with the purposes of TILA section 129C; or are necessary and appropriate to effectuate the purposes of TILA sections 129B and 129C, to prevent circumvention or evasion thereof, or to facilitate compliance with such sections.[66] In addition, TILA section 129C(b)(3)(A) directs the Bureau to prescribe regulations to carry out the purposes of section 129C.[67] As discussed in the section-by-section analysis below, the Bureau is issuing certain provisions of this final rule pursuant to its authority under TILA section 129C(b)(3)(B)(i).

Section 1022(b)(1) of the Dodd-Frank Act authorizes the Bureau to prescribe rules to enable the Bureau to administer and carry out the purposes and objectives of the Federal consumer financial laws, and to prevent evasions thereof.[68] TILA and title X of the Dodd-Frank Act are Federal consumer financial laws. Accordingly, in this final rule, the Bureau is exercising its authority under Dodd-Frank Act section 1022(b) to prescribe rules that carry out the purposes and objectives of TILA and title X and prevent evasion of those laws.

V. Why the Bureau Is Issuing This Final Rule

This final rule replaces the January 10, 2021 sunset date of the Temporary GSE QM loan definition with a provision that extends the Temporary GSE QM loan definition until the mandatory compliance date of final amendments to the General QM loan

[58] Based on 2018 data, the Bureau estimated in the General QM Proposal that 943,000 High-DTI conventional loans would fall outside the QM definitions if there are no changes to the General QM loan definition prior to the expiration of the Temporary GSE QM loan definition but would fall within the General QM loan definition if amended as the Bureau proposed.

[59] 85 FR 53568 (Aug. 28, 2020).

[60] 85 FR 60096 (Sept. 24, 2020).

[61] 12 U.S.C. 5581(a)(1)(A).

[62] Dodd-Frank Act section 1002(14), 12 U.S.C. 5481(14) (defining ''Federal consumer financial law'' to include the ''enumerated consumer laws'' and the provisions of title X of the Dodd-Frank Act), Dodd-Frank Act section 1002(12)(O), 12 U.S.C. 5481(12)(O) (defining ''enumerated consumer laws'' to include TILA).

[63] 15 U.S.C. 1604(a).

[64] 15 U.S.C. 1601(a).

[65] 15 U.S.C. 1639b(a)(2).

[66] 15 U.S.C. 1639c(b)(3)(B)(i).

[67] 15 U.S.C. 1639c(b)(3)(A).

[68] 12 U.S.C. 5512(b)(1).

definition in Regulation Z.[69] The Bureau is issuing this final rule because it is concerned about the likely effects on the availability and cost of credit if the Temporary GSE QM loan definition were to expire before final amendments to the General QM loan definition take effect.[70] The Bureau proposed amendments to the General QM loan definition in the General QM Proposal, which the Bureau issued on June 22, 2020.[71]

As explained above, the General QM Proposal would remove the General QM loan definition's 43 percent DTI limit and replace it with a price-based approach. Specifically, the General QM Proposal provides that a loan meets the General QM loan definition in § 1026.43(e)(2) only if the APR exceeds the APOR for a comparable transaction by less than two percentage points as of the date the interest rate is set.[72] The Bureau expects that the amendments the Bureau proposed in the General QM Proposal would, among other things, allow most loans that currently could receive QM status under the Temporary GSE QM loan definition to receive QM status under the General QM loan definition if they are made after the Temporary GSE QM loan definition expires.

However, the Bureau believes that some consumers who would have obtained loans under the Temporary GSE QM loan definition—and who would be able to obtain loans under the revised General QM loan definition, as separately proposed in the General QM Proposal—would not be able to obtain loans at all if the Temporary GSE QM loan definition expired before final amendments to the General QM loan definition have gone into effect. Further, for loans absorbed by FHA and the private market in the absence of the Temporary GSE QM loan definition, there is a significant risk that some consumers would have paid more for these loans. Any such pricing effects, however, would depend on the characteristics of the particular loans that would be originated as FHA loans or in the private market.

To prevent these likely effects on the availability and cost of credit if the Temporary GSE QM loan definition were to expire before final amendments to the General QM loan definition take effect, the Bureau is revising the ATR/QM Rule to provide that the Temporary GSE QM loan definition will expire on the mandatory compliance date of a final rule issued by the Bureau amending the General QM loan definition or when the GSEs exit conservatorship, whichever comes first. The Bureau concludes that this extension of the Temporary GSE QM loan definition's sunset date will ensure that responsible, affordable credit remains available to consumers who may have been affected if the Temporary GSE QM loan definition were to expire before amendments to the General QM loan definition take effect.

Consistent with the Extension Proposal, and for the reasons discussed below in the section-by-section analysis of § 1026.43(e)(4)(iii)(B), the Bureau is not amending the conservatorship clause in § 1026.43(e)(4)(ii)(A).

A. Why the Bureau Created the Temporary GSE QM Loan Definition

In the January 2013 Final Rule, the Bureau explained why it created the Temporary GSE QM loan definition. The Bureau observed that it did not believe that a 43 percent DTI ratio ''represents the outer boundary of responsible lending'' and acknowledged that historically, and even after the financial crisis, over 20 percent of mortgages exceeded that threshold.[73] However, the Bureau stated that, as DTI ratios increase, ''the general ability-to-repay procedures, rather than the qualified mortgage framework, is better suited for consideration of all relevant factors that go to a consumer's ability to repay a mortgage loan'' and that ''[o]ver the long term . . . there will be a robust and sizable market for prudent loans beyond the 43 percent threshold even without the benefit of the presumption of compliance that applies to qualified mortgages.'' [74]

At the same time, the Bureau noted that the mortgage market was especially fragile following the financial crisis and that GSE-eligible loans and federally insured or guaranteed loans made up a significant majority of the market.[75] The Bureau believed that it was appropriate to consider for a period of time that GSE-eligible loans were originated with an appropriate assessment of the consumer's ability to repay and therefore warranted being treated as QMs.[76] The Bureau believed in 2013 that this temporary category of QM loans would, in the near term, help to ensure access to responsible, affordable credit for consumers with DTI ratios above 43 percent, as well as facilitate compliance by creditors by promoting the use of widely recognized, federally related underwriting standards.[77]

The January 2013 Final Rule established a sunset date for the Temporary GSE QM loan definition of January 10, 2021 (seven years after that rule's effective date). The January 2013 Final Rule also stated that the Temporary GSE QM loan definition expires with respect to a GSE when that GSE exits conservatorship, even if that occurs before January 10, 2021.[78] The Bureau stated that it believed a seven-year period between the January 2013 Final Rule's effective date and the Temporary GSE QM loan definition's sunset date would ''provide an adequate period for economic, market, and regulatory conditions to stabilize'' and ''a reasonable transition period to the general qualified mortgage definition.'' [79] The Bureau believed that the Temporary GSE QM loan definition would benefit consumers by preserving access to credit while the mortgage industry adjusted to the ATR/QM Rule.[80] The Bureau also explained that it structured the Temporary GSE QM loan definition to cover loans eligible to be purchased or guaranteed by either of the GSEs—regardless of whether the loans are actually purchased or guaranteed—to leave room for non-GSE private investors to return to the market and secure the same legal protections as the GSEs.[81]

The Bureau believed that, as the market recovered, the GSEs and the Federal agencies would be able to reduce their market presence, the percentage of Temporary GSE QM loans would decrease, and the market would shift toward General QM loans and non-QM loans above a 43 percent DTI ratio.[82] The Bureau's view was that a shift towards non-QM loans could be supported by the non-GSE private market—*i.e.,* by institutions holding such loans in portfolio, selling them in

[69] This final rule does not amend the conservatorship clause in § 1026.43(e)(4)(ii)(A), which provides that the Temporary GSE QM loan definition will expire with respect to each GSE when that GSE exits conservatorship.

[70] As described in the section-by-section analysis below, the mandatory compliance date for a final rule amending the General QM loan definition either would be the same as the effective date of such a final rule or would occur after the effective date of such a final rule. So, under this final rule, the Temporary GSE QM loan definition would cease to be available no earlier than the effective date of a final rule amending the General QM loan definition.

[71] 85 FR 41448 (July 10, 2020).

[72] The General QM Proposal would also provide higher thresholds for loans with smaller loan amounts and for subordinate-lien transactions.

[73] 78 FR 6408, 6527 (Jan. 30, 2013).

[74] *Id.* at 6527–28.

[75] *Id.* at 6533–34.

[76] *Id.* at 6534.

[77] *Id.* at 6533.

[78] *See* 12 CFR 1026.43(e)(4)(ii)(A)(*1*) and (iii)(B).

[79] 78 FR 6408, 6534 (Jan. 30, 2013).

[80] *Id.* at 6536.

[81] *Id.* at 6534.

[82] *Id.*

whole, or securitizing them in a rejuvenated private-label securities (PLS) market. The Bureau noted that pursuant to its statutory obligations under the Dodd-Frank Act, it would assess the impact of the ATR/QM Rule five years after the ATR/QM Rule's effective date, and the assessment would provide an opportunity to analyze the Temporary GSE QM loan definition.[83]

B. The Continued Prevalence of Temporary GSE QM Loan Originations

The mortgage market has evolved differently than the Bureau predicted when it issued the January 2013 Final Rule. Contrary to the Bureau's expectations in 2013, the market has not shifted away from Temporary GSE QM originations and the private market[84] remains small. As noted in the Assessment Report, Temporary GSE QM originations continue to represent ''a large and persistent'' share of originations in the conforming segment of the mortgage market, and a robust and sizable market to support non-QM lending has not emerged.[85]

The GSEs' share of the conventional, conforming purchase-mortgage market was large before the ATR/QM Rule, and the Assessment Report found a small increase in that share since the ATR/QM Rule's effective date, reaching 71 percent in 2017.[86] The Assessment Report noted that, at least for loans intended for sale in the secondary market, creditors generally offer a Temporary GSE QM loan even when a General QM loan could be originated.[87]

As explained in the Extension Proposal, the continued prevalence of Temporary GSE QM loan originations is contrary to the Bureau's expectation at the time it issued the January 2013 Final Rule.[88] The Assessment Report discussed several possible reasons for the continued prevalence of Temporary GSE QM loan originations. The Assessment Report first highlighted concerns that Assessment RFI commenters expressed about the perceived lack of clarity in appendix Q. The Assessment Report found that such concerns ''may have contributed to investors'—and at least derivatively, creditors'—preference'' for Temporary GSE QM loans instead of originating loans under the General QM loan definition.[89] The Assessment Report noted that a second possible reason for the continued prevalence of Temporary GSE QM loans is that the GSEs were able to accommodate demand for mortgages above the General QM loan definition's DTI limit of 43 percent as the DTI ratio distribution in the market shifted upward.[90] The Assessment Report found that a third possible reason for the persistence of Temporary GSE QM loans is the structure of the secondary market.[91] If creditors adhere to the GSEs' guidelines, they gain access to a robust, highly liquid secondary market.[92] In contrast, while private market securitizations have grown somewhat in recent years, their volume is still a fraction of their pre-crisis levels.[93]

C. The Potential Market Impact of the Temporary GSE QM Loan Definition's Expiration

As the Extension Proposal explained, the Bureau anticipates that two main types of conventional loans would be affected by the expiration of the Temporary GSE QM loan definition: High-DTI GSE loans (those with DTI ratios above 43 percent) and GSE-eligible loans without appendix Q-required documentation. Leaving the current fixed sunset date in place would affect these loans because they are currently originated as QM loans due to the Temporary GSE QM loan definition but would not be originated as General QM loans, and may not be originated at all, if the Temporary GSE QM loan definition were to expire before amendments to the General QM loan definition are in effect. This final rule refers to these loans as potentially displaced loans.

The Extension Proposal's analysis of the potential market impact of the Temporary GSE QM loan definition's expiration cited data and analysis from the Bureau's ANPR, as described below. None of the comments on the Extension Proposal challenged the data or analysis from the ANPR or the Extension Proposal related to the potential market impacts of the Temporary GSE QM loan definition's expiration.[94] The Bureau concludes that the data and analysis in the Extension Proposal and ANPR provide an appropriate estimate of the potential impact of the Temporary GSE QM loan definition's expiration for this final rule.

High-DTI GSE Loans. The ANPR provided an estimate of the number of loans potentially affected by the expiration of the Temporary GSE QM loan definition.[95] In providing the estimate, the ANPR focused on loans that fall within the Temporary GSE QM loan definition but not the General QM loan definition because they have a DTI ratio above 43 percent. This final rule refers to these loans as High-DTI GSE loans. Based on data from the National Mortgage Database (NMDB), the Bureau estimated that there were approximately 6.01 million closed-end first-lien residential mortgage originations in the United States in 2018.[96] Based on supplemental data provided by the FHFA, the Bureau estimated that the GSEs purchased or guaranteed 52 percent—roughly 3.12 million—of those loans.[97] Of those 3.12 million loans, the Bureau estimated that 31 percent—approximately 957,000 loans—had DTI ratios greater than 43 percent.[98] Thus, the Bureau estimated that as a result of the General QM loan definition's 43 percent DTI limit, approximately 957,000 loans—16 percent of all closed-end first-lien residential mortgage originations in 2018—were High-DTI GSE loans.[99] This estimate does not include Temporary GSE QM loans that were eligible for purchase by either of the GSEs but were not sold to the GSEs.

Loans Without Appendix Q-Required Documentation That Are Otherwise GSE-Eligible. In addition to High-DTI GSE loans, an additional, smaller number of Temporary GSE QM loans with DTI ratios of 43 percent or less when calculated using GSE underwriting guides would not fall within the General QM loan definition because their method of documenting and verifying income or debt is

[83] *Id.*

[84] Consistent with the Assessment Report, references to the private market herein include loans securitized by PLS and loans financed by portfolio lending by commercial banks, credit unions, savings banks, savings associations, mortgage banks, life insurance companies, finance companies, their affiliate institutions, and other private purchasers. *See* Assessment Report, *supra* note 27, at 74.

[85] *Id.* at 198.

[86] *Id.* at 191.

[87] *Id.* at 192.

[88] *Id.* at 13, 190, 238.

[89] *Id.* at 193.

[90] *Id.* at 194.

[91] *Id.* at 196.

[92] *Id.*

[93] *Id.*

[94] As noted below in the Bureau's section 1022(b) analysis, two consumer advocate commenters that submitted a joint comment letter argued for a more complete analysis of reasonable alternatives and that the Bureau should redo its analysis of benefits and costs when more data is available. However, these commenters did not challenge the Bureau's estimates of the potential market impacts of the Temporary GSE QM loan definition's expiration.

[95] 84 FR 37155, 37158–59 (July 31, 2019).

[96] *Id.*

[97] *Id.* at 37159.

[98] *Id.* The Bureau estimates that 616,000 of these loans were for home purchases, and 341,000 were refinance loans. In addition, the Bureau estimates that the share of these loans with DTI ratios over 45 percent has varied over time due to changes in market conditions and GSE underwriting standards, rising from 47 percent in 2016 to 56 percent in 2017, and further to 69 percent in 2018.

[99] *Id.*

incompatible with appendix Q.[100] These loans would also likely be affected if the Temporary GSE QM loan definition were to expire before amendments to the General QM loan definition are in effect. As explained in the Extension Proposal, the Bureau understands, from extensive public feedback and its own experience, that appendix Q does not specifically address whether and how to document and include certain forms of income. The Bureau understands these concerns are particularly acute for self-employed consumers, consumers with part-time employment, and consumers with irregular or unusual income streams.[101] As a result, these consumers' access to credit may be affected if the Temporary GSE QM loan definition were to expire before amendments to the General QM loan definition are in effect.

The Bureau's analysis of the market under the baseline focuses on High-DTI GSE loans because the Bureau estimates that most potentially displaced loans are High-DTI GSE loans. The Bureau also lacks the loan-level documentation and underwriting data necessary to estimate with precision the number of potentially displaced loans that do not fall within the other General QM loan requirements and are not High-DTI GSE loans. However, the Assessment Report did not find evidence of substantial numbers of loans in the non-GSE-eligible jumbo market being displaced when appendix Q verification requirements became effective in 2014.[102] Further, the Assessment Report found evidence of only a limited reduction in the approval rate of self-employed applicants for non-GSE eligible mortgages.[103] Based on this evidence, along with qualitative comparisons of GSE and appendix Q documentation requirements and available data on the prevalence of borrowers with non-traditional or difficult-to-document income (*e.g.,* self-employed borrowers, retired borrowers, those with irregular income streams), the Bureau estimates this second category of potentially displaced loans is considerably less numerous than the category of High-DTI GSE loans. Nevertheless, the Bureau believes that, for some borrowers, there would be a meaningful impact on their access to credit because their method of documenting and verifying income or debt is incompatible with appendix Q.

Additional Effects on Loans Not Displaced. The Extension Proposal explained that, in addition to potentially displaced loans, loans that continue to be originated as QM loans after the expiration of the Temporary GSE QM loan definition would also be affected. After the sunset date, absent changes to the General QM loan definition, all loans with DTI ratios at or below 43 percent that are or would have been purchased and guaranteed as GSE loans under the Temporary GSE QM loan definition—approximately 2.16 million loans in 2018—and that continue to be originated as General QM loans after the provision expires would be required to verify income and debts according to appendix Q, rather than only according to GSE guidelines. Given the concerns raised about appendix Q's ambiguity and lack of flexibility, this would likely entail both increased documentation burden for some consumers as well as increased costs or time-to-origination for creditors on some loans.[104] Commenters on the Extension Proposal did not offer additional estimates regarding the number of potentially displaced loans.

Focusing on High-DTI GSE loans, the Bureau expects that these loans will continue to comprise a significant proportion of mortgage originations through January 10, 2021, when the Temporary GSE QM loan definition was scheduled to expire.[105] The ANPR identified several ways that the market for loans that would have been High-DTI GSE loans may respond to the expiration of the Temporary GSE QM loan definition.[106] In doing so, the Bureau made assumptions about the future behavior of certain mortgage market participants: (1) That there is no change to the GSEs' current policy that does not allow purchase of non-QM loans; and (2) that creditors' preference for making Temporary GSE QM loans, and investors' preference for purchasing such loans, is driven in part by the safe harbor provided to such loans and that these preferences would continue at least for some creditors and investors.[107]

The Bureau concludes that this analysis from the ANPR continues to provide an appropriate assessment of how the market for loans that would have been High-DTI GSE loans may have responded to the Temporary GSE QM loan definition's expiration prior to the effective date of amendments to the General QM definition. Therefore, the Bureau expects that many consumers who would have obtained High-DTI GSE loans would instead have obtained FHA-insured loans because FHA currently insures loans with DTI ratios up to 57 percent (with compensating factors).[108] The number of loans that would have moved to FHA would depend on FHA's willingness and ability to insure such loans, on whether the FHA mortgage payment would be affordable to the consumer relative to any options in the private mortgage market, on whether FHA continues to treat all loans that it insures as QMs under its own QM rule, and on how many High-DTI GSE loans exceed FHA's loan-amount limit.[109] For example, the Extension Proposal estimated that, in 2018, 11 percent of High-DTI GSE loans exceeded FHA's loan-amount limit.[110] The Bureau considers this an outer limit on the share of High-DTI GSE loans that could have moved to FHA.[111] As explained in the Extension Proposal, the Bureau expects that loans that would have been originated as FHA loans instead of under the Temporary GSE QM loan definition would generally have cost materially more for many consumers.[112] The Bureau also expects

[100] *Id.* at 37159 n.58. Where these types of loans have DTI ratios above 43 percent, they would be captured in the estimate above relating to High-DTI GSE loans.

[101] For example, in qualitative responses to the Bureau's Lender Survey conducted as part of the Assessment Report, underwriting for self-employed consumers was one of the most frequently reported sources of difficulty in originating mortgages using appendix Q. These concerns were also raised in comments submitted in response to the Assessment RFI, noting that appendix Q is ambiguous with respect to how to treat income for consumers who are self-employed, have irregular income, or want to use asset depletion as income. *See* Assessment Report, *supra* note 27, at 200.

[102] *Id.* at 107 (''For context, total jumbo purchase originations increased from an estimated 108,700 to 130,200 between 2013 and 2014, based on nationally representative NMDB data.'').

[103] *Id.* at 118 (''The Application Data indicates that, notwithstanding concerns that have been expressed about the challenge of documenting and verifying income for self-employed borrowers under the General QM standard and the documentation requirements contained in appendix Q to the Rule, approval rates for non-High-DTI, non-GSE eligible self-employed borrowers have decreased only slightly, by two percentage points.'').

[104] *See* part V.B for additional discussion of concerns raised about appendix Q.

[105] 84 FR 37155, 37159 (July 31, 2019).

[106] *Id.*

[107] *Id.*

[108] *Id.* In fiscal year 2019, approximately 57 percent of FHA-insured purchase mortgages had a DTI ratio above 43 percent. U.S. Dep't of Hous. & Urban Dev., *Annual Report to Congress Regarding the Financial Status of the FHA Mutual Mortgage Insurance Fund, Fiscal Year 2019,* at 33 (Nov. 14, 2019), *https://www.hud.gov/sites/dfiles/Housing/documents/2019FHAAnnualReportMMIFund.pdf.*

[109] 84 FR 37155, 37159 (July 31, 2019).

[110] *Id.* In 2018, FHA's county-level maximum loan limits ranged from $271,050 to $721,050. *See* U.S. Dep't of Hous. & Urban Dev., *FHA Mortgage Limits, https://entp.hud.gov/idapp/html/hicostlook.cfm* (last visited Oct. 17, 2020).

[111] 84 FR 37155, 37159 (July 31, 2019).

[112] Interest rates and insurance premiums on FHA loans generally feature less risk-based pricing than conventional loans, charging more similar rates and premiums to all consumers. As a result, they are likely to cost more than conventional loans for consumers with stronger credit scores and larger down payments. Consistent with this pricing differential, consumers with higher credit scores

that some consumers offered FHA loans might have chosen not to take out a mortgage because of these higher costs.

It is also possible that some consumers who would have sought High-DTI GSE loans would have been able to obtain loans in the private market.[113] The ANPR noted that the number of loans absorbed by the private market would likely depend, in part, on whether actors in the private market are willing to assume the legal and credit risk associated with funding High-DTI GSE loans as non-QM loans or small-creditor portfolio QM loans[114] and, if so, whether actors in the private market would offer more competitive pricing or terms.[115] For example, as explained in the Extension Proposal, the Bureau estimates that 55 percent of High-DTI GSE loans in 2018 had credit scores at or above 680 and loan-to-value (LTV) ratios at or below 80 percent—credit characteristics traditionally considered attractive to actors in the private market.[116] The ANPR also noted that there are certain built-in costs to FHA loans—namely, mortgage insurance premiums—which could be a basis for competition and that depository institutions in recent years have shied away from originating and servicing FHA loans due to the obligations and risks associated with such loans.[117]

However, the Assessment Report found that a robust market for non-QM loans above the 43 percent DTI limit has not materialized as the Bureau had predicted. Therefore, there is limited capacity in the non-QM market to provide access to credit if the Temporary GSE QM loan definition were to expire before a final rule amending the General QM loan definition has taken effect.[118] As described above, the non-QM market has been further reduced by the recent economic disruptions associated with the COVID–19 pandemic, with most mortgage credit now available in the QM lending space. The Bureau acknowledges that the slow development of the non-QM market, and the recent economic disruptions that may significantly hinder its development in the near term, may further reduce access to credit outside the QM space.

Finally, the ANPR noted that some consumers who would have sought High-DTI GSE loans may adapt to changing options and make different choices, such as adjusting their borrowing to result in a lower DTI ratio.[119] However, some consumers who would have sought High-DTI GSE loans may not have been able to obtain loans at all.[120]

D. Why the Bureau Is Extending the Temporary GSE QM Loan Definition

The Bureau anticipates that if the Temporary GSE QM loan definition expired as currently scheduled and there are no changes to the General QM loan definition prior to expiration, some High-DTI GSE loans and loans without appendix Q-required documentation that are otherwise GSE-eligible would not be made and some would cost consumers materially more.[121] In the General QM Proposal, the Bureau proposed to remove the General QM loan definition's DTI limit and replace it with a limit based on the loan's pricing. Under the General QM Proposal, a loan would meet the General QM loan definition only if the APR exceeds the APOR for a comparable transaction by less than two percentage points as of the date the interest rate is set.[122] The Bureau expects that the amendments the Bureau proposed in the General QM Proposal would, among other things, allow most loans that currently could receive QM status under the Temporary GSE QM loan definition to receive QM status under the General QM loan definition if they are made after the Temporary GSE QM loan definition expires.[123]

The Bureau is concerned about the likely effects on the availability and cost of credit if the Temporary GSE QM loan definition were to expire before final amendments to the General QM loan definition take effect. As explained in the Extension Proposal, while the Bureau can estimate the outer limit of the share of High-DTI GSE loans that could be originated by the FHA, the Bureau cannot estimate with precision the extent to which loans would be absorbed by the FHA or the characteristics of the particular loans that might be absorbed.[124] Similarly, while the Bureau also anticipates that the private market might absorb additional loans that would have been High-DTI GSE loans, the Bureau is uncertain as to the private market's capacity to absorb these loans in the short term—as a robust market for non-QM loans above the 43 percent DTI limit has not materialized as the Bureau had predicted and as the non-QM market has been further reduced by the current economic disruptions associated with the COVID–19 pandemic. And, as noted, the Bureau lacks the loan-level documentation and underwriting data necessary to estimate with precision the number of potentially displaced loans that do not fall within the General QM loan definition due to appendix Q-related issues and are not High-DTI GSE loans. Despite these uncertainties, it is likely that some consumers who would have obtained loans under the Temporary GSE QM loan definition—and who would be able to obtain loans under the revised General QM loan definition, as separately proposed by the Bureau—would not have been able to obtain loans at all if the Temporary GSE QM loan definition were allowed to expire before final amendments to the General QM loan definition have gone

and larger down payments chose FHA loans relatively rarely in 2018 Home Mortgage Disclosure Act (HMDA) data on mortgage originations. *See* Bureau of Consumer Fin. Prot., *Introducing New and Revised Data Points in HMDA* (Aug. 2019), *https://files.consumerfinance.gov/f/documents/cfpb_new-revised-data-points-in-hmda_report.pdf.*

[113] 84 FR 37155, 37159 (July 31, 2019).

[114] *See* 12 CFR 1026.43(e)(5) (extending QM status to certain portfolio loans originated by certain small creditors). In addition, section 101 of the Economic Growth, Regulatory Relief, and Consumer Protection Act (EGRRCPA), Public Law 115–174, section 101, 132 Stat. 1296, 1297 (2018), amended TILA to add a safe harbor for small-creditor portfolio loans. *See* 15 U.S.C. 1639c(b)(2)(F).

[115] 84 FR 37155, 37159 (July 31, 2019).

[116] *Id.*

[117] *Id.*

[118] Assessment Report, *supra* note 27, at 198.

[119] 84 FR 37155, 37159 (July 31, 2019).

[120] *Id.*

[121] *See supra* part V.C.

[122] The General QM Proposal would preserve the current threshold separating safe harbor from rebuttable presumption QMs, under which a loan is a safe harbor QM if its APR exceeds APOR for a comparable transaction by less than 1.5 percentage points as of the date the interest rate is set (or by less than 3.5 percentage points for subordinate-lien transactions).

[123] As described above in part III.C, the Bureau also recently issued the Seasoned QM Proposal, which would create a new category of QMs for first-lien, fixed-rate covered transactions that have met certain performance requirements over a 36-month seasoning period, are held in portfolio until the end of the seasoning period, comply with general restrictions on product features and points and fees, and meet certain underwriting requirements. 85 FR 53568 (Aug. 28, 2020). The Bureau notes that the Seasoned QM Proposal, if finalized, would not address the short-term access to credit concerns described here. The Seasoned QM Proposal would not address the likely effects on the availability and cost of credit if the Temporary GSE QM loan definition were to expire before final amendments to the General QM loan definition take effect, because among other things, as described in the Seasoned QM Proposal, the Seasoned QM definition would take effect at the same time that final amendments to the General QM loan definition take effect. *Id.* at 53569.

[124] Assuming they are still originated, potentially displaced loans made with high LTVs or to consumers with low credit scores are the least likely to be absorbed by the private market, and thus most likely to be absorbed by the FHA. The exact characteristics of loans likely to be absorbed by the FHA would depend on the relative pricing and underwriting requirements of FHA and private market alternatives.

into effect.[125] Further, for loans absorbed by the FHA and the private market in the absence of the Temporary GSE QM loan definition, there is a significant risk that some consumers would have paid more for these loans, although any pricing effects would depend on the characteristics of the particular loans that would be originated as FHA loans or in the private market.[126]

To prevent these likely effects on the availability and cost of credit if the Temporary GSE QM loan definition expired before final amendments to the General QM loan definition take effect, the Bureau is extending the Temporary GSE QM loan definition until the mandatory compliance date of a final rule issued by the Bureau amending the General QM loan definition, or when the GSEs exit conservatorship, whichever comes first. As discussed below in the section-by-section analysis, commenters to the Extension Proposal were supportive of the Bureau's proposal to extend the sunset of the Temporary GSE QM loan definition rather than allowing it to expire on January 10, 2021. The Bureau is issuing this extension to ensure that responsible, affordable credit remains available to consumers who may be affected if the Temporary GSE QM loan definition expires before these amendments take effect.[127]

The Bureau stated in the January 2013 Final Rule that, for a limited period of time and while the GSEs are under conservatorship of the FHFA, it believed that GSE-eligible loans are originated with appropriate consideration of ability to repay.[128] Under current conditions, the Bureau finds that it is appropriate to extend that presumption for a short period until the mandatory compliance date of Bureau amendments to the General QM loan definition, in light of concerns about effects on the availability and cost of credit if the Temporary GSE QM loan definition expires before a rule revising the General QM loan definition takes effect.

Under the conservatorship clause in the current rule, the Temporary GSE QM loan definition expires with respect to a GSE when that GSE exits conservatorship, even if that occurs before January 10, 2021. Consistent with the Extension Proposal, this final rule does not amend this provision. The Bureau addresses the comments it received related to the conservatorship clause in the section-by-section analysis of § 1026.43(e)(4)(iii)(B), below.

VI. Section-by-Section Analysis

1026.43 Minimum Standards for Transactions Secured by a Dwelling

43(e) Qualified Mortgages

43(e)(4) Qualified Mortgage Defined—Special Rules

43(e)(4)(iii) Sunset of Special Rules

43(e)(4)(iii)(B)

Section 1026.43(e)(4)(iii)(B) provides that the Temporary GSE QM loan definition is available only for covered transactions consummated on or before January 10, 2021.[129] The Bureau proposed to revise § 1026.43(e)(4)(iii)(B) to state that the Temporary GSE QM loan definition is available only for covered transactions consummated on or before the effective date of a final rule issued by the Bureau amending § 1026.43(e)(2). Proposed § 1026.43(e)(4)(iii)(B) also would have stated that the Bureau will amend § 1026.43(e)(4)(iii)(B) as of that effective date to reflect the new status. The Bureau also proposed conforming amendments to comment 43(e)(4)-3. The Bureau did not propose to amend the conservatorship clause in § 1026.43(e)(4)(ii)(A). This final rule amends § 1026.43(e)(4)(iii)(B) largely as the Bureau proposed, with minor modifications as described below.

Comments Received

The Bureau received 29 comments in response to the Extension Proposal from industry, consumer advocates, and others. All commenters supported extending the Temporary GSE QM loan definition. No commenter recommended that the Temporary GSE QM loan definition expire earlier than the effective date of final amendments to the General QM loan definition. Many commenters stated that they agreed with the Bureau that extending the Temporary GSE QM loan definition would ensure that responsible, affordable credit remains available to consumers who may be affected if the Temporary GSE QM loan definition expires before these amendments take effect.

Several commenters recommended that the Bureau finalize the Extension Proposal as proposed. Several other commenters recommended modifications to the proposal, as described and organized below based on the topic of concern.

Gap in coverage. Several industry commenters recommended that the Bureau modify the proposed sunset date to prevent a gap around the effective date of final amendments to the General QM loan definition in which neither the Temporary GSE QM loan definition nor the revised General QM loan definition would apply to certain loans. These commenters noted that, under the Extension Proposal, the Temporary GSE QM loan definition would be available only for covered transactions consummated on or before the effective date of final amendments to the General QM loan definition. At the same time, as these commenters noted, the General QM Proposal provided that the revised General QM loan definition would apply to covered transactions for which creditors receive an application on or after the effective date of the final amendments to the General QM loan definition. These commenters stated that, as a result, when a creditor receives an application before the effective date of final amendments to the General QM loan definition, but the loan is consummated after that effective date, neither the Temporary GSE QM loan definition nor the revised General QM loan definition would apply. Consequently, loans that would have been QMs under the Temporary GSE QM loan definition—and that would have been eligible for QM status under the revised General QM loan definition—would not be eligible for QM status under either the Temporary GSE QM loan definition (because the loan was consummated after the effective date of a final rule amending the General QM loan definition) or the revised General QM loan definition (because the creditor received the application before the effective date of a final rule amending the General QM loan definition).

[125] *See supra* part V.C, noting that some consumers who would have sought High-DTI GSE loans may make different choices, such as by adjusting their borrowing to result in a lower DTI ratio.

[126] The Assessment Report noted that, while there did not appear to be a marked change in the relative price of non-QM High-DTI loans immediately following the implementation of the ATR/QM Rule, other research has found a 25 basis point premium for non-QM High-DTI loans in more recent years. Assessment Report, *supra* note 27, at 121–22.

[127] The Bureau expects to finalize a rule amending the General QM loan definition, at which point the Temporary GSE QM loan definition would expire under this final rule. However, the Bureau notes that in the unlikely event that such a rule is not finalized and the current General QM loan definition remains in place, the Bureau would revisit the Temporary GSE QM loan definition and take appropriate action. As noted above, the Bureau does not intend to maintain indefinitely a presumption that loans eligible for purchase or guarantee by either of the GSEs have been originated with appropriate consideration of the consumer's ability to repay.

[128] 78 FR 6408, 6534 (Jan. 30, 2013).

[129] Section 1026.43(e)(4)(iii)(B) also applies to the other temporary QM loan definitions in § 1026.43(e)(4). However, as noted above in part II, these other temporary QM loan definitions have expired because the relevant Federal agencies have issued their own QM rules. *See, e.g.,* 24 CFR 203.19 (HUD rule).

These industry commenters recommended several options to prevent such a gap. Several commenters suggested that the Bureau prevent this gap by having the Temporary GSE QM loan definition expire six months after the effective date of final amendments to the General QM loan definition, rather than on the effective date. This approach would create an overlap period in which creditors could originate QMs under either the Temporary GSE QM loan definition or the revised General QM loan definition. Two commenters suggested that the Bureau align the sunset date with the effective date of final amendments to the General QM loan definition based on the date the creditor received the consumer's application. Under this approach, the Temporary GSE QM loan definition would be available only for covered transactions for which the creditor receives the consumer's application before the effective date of final amendments to the General QM loan definition, and the revised General QM loan definition would apply to covered transactions for which creditors receive an application on or after this effective date. One commenter recommended that the Bureau adopt this approach but provide that the Temporary GSE QM loan definition would cease to be available six months after the effective date of final amendments to the General QM loan definition.

Two industry commenters opposed aligning the sunset date of the Temporary GSE QM loan definition with the effective date of final amendments to the General QM loan definition based on the application date. These commenters argued that this standard would be unclear because ''application'' is not clearly defined for purposes of the ATR/QM Rule. One of these commenters recommended that, if the Bureau adopted this approach, it clarify that ''application'' has the same definition as under the Bureau's TILA–RESPA [130] Integrated Disclosure Rule (TRID). The other commenter stated that the Bureau should not align the sunset date of the Temporary GSE QM loan definition with the effective date of final amendments to the General QM loan definition based on the application date, because creditors do not typically maintain a non-TRID application date in their systems. This commenter also stated that QM status is not determined at the time of application, so the proposed approach may create problems if a loan application is received prior to the sunset date but is no longer eligible for purchase or guarantee by the GSEs at the time of consummation after the sunset date.

One industry commenter suggested that the Bureau could prevent this gap in coverage by aligning the sunset date with the effective date of a final rule amending the General QM loan definition based on the date of consummation. Under this approach, the Temporary GSE QM loan definition would be available for covered transactions consummated before the effective date of a final rule amending the General QM loan definition (as the Bureau proposed), and then, in that final rule, the Bureau would provide that the revised General QM loan definition would apply to covered transactions consummated on or after the effective date. One industry commenter opposed this approach, stating that it would effectively reduce the length of the implementation period for the revised General QM loan definition. One industry commenter also suggested that both the Temporary GSE QM loan definition and the revised General QM loan definition be available for loans in process on the effective date of the revised General QM loan definition.

Other comments on the sunset date. As noted above, several industry commenters suggested that the Bureau prevent a gap around the effective date of final amendments to the General QM loan definition by having the Temporary GSE QM loan definition expire six months after the effective date of final amendments to the General QM loan definition, rather than on the effective date. Several industry commenters and one individual commenter also recommended this approach to address a different concern. These commenters stated that an overlap between the Temporary GSE QM loan definition and the revised General QM loan definition would help facilitate the implementation of the revised General QM loan definition.

Many of these commenters noted that creditors will need to update their business processes and information technology systems as they prepare to comply with the revised General QM loan definition. These commenters stated that an overlap would reduce the likelihood that unforeseen implementation problems arising after the effective date of the General QM amendments could disrupt creditors' ability to originate loans. One of these commenters also noted that secondary market participants will be adjusting to the revised definition. Several of these commenters stated that the COVID–19 pandemic is straining creditors' resources and personnel, making it more difficult for them to adapt to the new definition. A few of these commenters stated that an overlap period would reduce the potential that a revised General QM loan definition could disrupt the mortgage market and affect credit access due to unforeseen changes in the economy or the mortgage market due to the COVID–19 pandemic.

Another commenter stated that an overlap would protect creditors that are affected by clarifications the Bureau makes to a final rule amending the General QM loan definition after it takes effect. With respect to how long the Temporary GSE QM loan definition and the revised General QM loan definition would overlap, commenters suggested periods between four months and one year.

In addition to the comments noted above, three other commenters recommended longer extensions of the sunset date to facilitate implementation of a final rule amending the General QM loan definition. An individual commenter requested a two-year extension of the sunset date until January 10, 2023. An industry commenter recommended an extension of 18 to 24 months, at a minimum.[131] Another industry commenter suggested that the Temporary GSE QM loan definition expire in January 2022 or the effective date of a final rule amending the General QM loan definition, whichever is later.

In addition to the general concerns about implementation noted above, two industry commenters stated that, in determining when the Temporary GSE QM loan definition should expire, the Bureau should consider the GSEs' recently mandated changes to the Uniform Residential Loan Application (URLA). The GSEs are requiring creditors to use a redesigned version of the URLA for all loan applications received on or after March 1, 2021. The GSEs have stated that beginning on March 1, 2022, they will no longer accept the previous URLA.[132] The two industry commenters stated that implementing the new URLA will require creditors to undertake extensive systems changes. One of these industry

[130] Real Estate Settlement Procedures Act of 1974 (RESPA), Public Law 93–533, 88 Stat. 1274 (1974).

[131] These commenters seemed to assume that a final rule issued by the Bureau amending the General QM loan definition would take effect sooner than 18 to 24 months from January 10, 2021, perhaps in light of the Bureau's statement in the Extension NPRM that it does not intend to issue a final rule amending the General QM loan definition early enough for it to take effect before April 1, 2021. 85 FR 41448, 41456 (July 10, 2020).

[132] Fannie Mae & Freddie Mac, *Extended URLA Implementation Timeline* (Apr. 14, 2020), *https://singlefamily.fanniemae.com/media/22661/display.*

commenters stated that requiring creditors to adapt to a revised General QM loan definition in the first six months of 2021 would compound this burden significantly. This commenter recommended that the Bureau extend the Temporary GSE QM loan definition to expire six months after the revised General QM loan definition. The other commenter requested that the Bureau address this concern by extending the Temporary GSE QM loan definition to expire on March 1, 2022, or on the effective date of a final rule amending the General QM loan definition, whichever is later.

Two consumer advocate commenters that submitted a joint comment letter recommended that the Bureau extend the Temporary GSE QM loan definition indefinitely in this rulemaking and determine its sunset date in a final rule amending the General QM loan definition. These commenters also recommended that the Temporary GSE QM loan definition remain in effect until the latest of the following events: A date certain that is no earlier than January 2022 and preferably in 2023; six months after the end of the COVID–19 national emergency; or the effective date of a final rule amending the General QM loan definition. These commenters stated that determining the Temporary GSE QM loan definition's sunset date in a final rule amending the General QM loan definition, instead of in this rulemaking, would allow the Bureau to adjust its approach to the expiration of the Temporary GSE QM loan definition based on the comments the Bureau receives on the General QM Proposal regarding the implementation of the General QM loan definition. In the commenters' view, this would better ensure a smooth transition to any revised General QM loan definition. The commenters stated that the Bureau would tie its hands by linking the sunset date with the effective date of a final rule amending the General QM loan definition; that doing so would create greater uncertainty for creditors; and that uncertainty is destabilizing and tends to reduce access to credit. These commenters also stated that the Temporary GSE QM loan definition should remain in place until the Bureau assesses the impact of the movement for racial justice on mortgage markets as well as the impact of the COVID–19 pandemic, including the decline of the non-QM market and creditors' increasing reliance on GSE and FHA loans.[133]

An industry commenter recommended that the Bureau not extend the Temporary GSE QM loan definition indefinitely. The commenter stated that the Temporary GSE QM loan definition provides significant advantages to the GSEs by codifying their underwriting parameters into the QM definition, which, according to the commenter, produces excessive reliance on the GSEs while stifling innovation by other market participants. The commenter also recommended that the Bureau not extend the Temporary GSE QM loan definition to a date certain. In the commenter's view, because the effective date of final amendments to the General QM loan definition is not yet known, extending the definition to a date certain could result in a sunset date that is too early (causing a gap between the Temporary GSE QM loan definition and a revised General QM loan definition) or too late (causing the Temporary GSE QM loan definition to remain in place longer than necessary, resulting in the perpetuation of the concerns relating to an indefinite extension that the commenter identified).

Several industry commenters recommended that, in a final rule amending the General QM loan definition, the Bureau adopt a longer implementation period—*i.e.,* the time period after such a final rule is issued and before creditors are required to transition from the current General QM loan definition to the revised General QM loan definition—than the six-month period the Bureau proposed. One industry commenter requested that the Bureau provide a 90-day grace period for compliance with the revised definition. The Bureau considers these to be comments on the General QM Proposal and best addressed in that rulemaking. The Bureau will consider these comments as it develops a final rule to amend the General QM loan definition.

Conservatorship clause. Three industry commenters and the two consumer advocacy groups that submitted a joint comment letter recommended that the Bureau remove the conservatorship clause from § 1026.43(e)(ii)(A)(1). Removing the conservatorship clause would result in the Temporary GSE QM loan definition not expiring with respect to a GSE if that GSE exited conservatorship. These commenters noted that the status of the conservatorships is outside of the Bureau's control and stated that, if one or both conservatorships were to end on short notice, the sudden expiration of the Temporary GSE QM loan definition would create turmoil in the market and reduce access to credit. Two industry commenters stated that the Bureau should clarify in advance of the end of conservatorship what steps the Bureau would take with respect to the Temporary GSE QM loan definition if the conservatorships were to end.

The Final Rule

This final rule amends § 1026.43(e)(4)(iii)(B) to provide that, unless otherwise expired under § 1026.43(e)(4)(iii)(A),[134] the special rules in § 1026.43(e)(4) are available only for covered transactions for which the creditor receives the consumer's application before the mandatory compliance date of a final rule issued by the Bureau amending § 1026.43(e)(2).[135] Revised § 1026.43(e)(4)(iii)(B) also states that the Bureau will amend § 1026.43(e)(4)(iii)(B) prior to that mandatory compliance date to reflect the new status.

This final rule also makes conforming changes to comment 43(e)(4)–3. As revised, comment 43(e)(4)–3 explains that the Temporary GSE QM loan definition applies only to loans for which the creditor receives the consumer's application before the mandatory compliance date of a final rule issued by the Bureau amending § 1026.43(e)(2), regardless of whether Fannie Mae or Freddie Mac (or any limited-life regulatory entity succeeding the charter of either) continues to operate under the conservatorship or receivership of the FHFA. The comment also explains that, accordingly, the Temporary GSE QM loan definition is available only for covered transactions: (i) That are consummated on or before the date Fannie Mae or Freddie Mac (or any limited-life regulatory entity succeeding the charter of either), respectively, cease to operate under the conservatorship or receivership of the FHFA and (ii) that are transactions for

[133] The Bureau addresses this group's comments on the conservatorship clause in the subsection below and on the Bureau's section 1022 analysis in part VII.A.1 below.

[134] 12 CFR 1026.43(e)(4)(iii)(A) states that each of the special rules described in 12 CFR 1026.43(e)(4)(ii)(B) through (E)—which provide that mortgages eligible to be insured or guaranteed (as applicable) by HUD, VA, USDA, and RHS are QMs—shall expire on the effective date of a rule issued by each respective agency pursuant to its authority under TILA section 129C(b)(3)(ii) to define a QM.

[135] The Bureau uses the term ''mandatory compliance date'' because this is the date on which creditors that wish to originate General QM loans will be required to comply with the revised General QM loan definition. As of the mandatory compliance date, the current General QM loan definition will no longer be available. The Bureau's use of the term does not imply that creditors are required to use the General QM loan definition to comply with the ATR/QM Rule's ability-to-repay requirement.

which the creditor receives the consumer's application before the mandatory compliance date of a final rule issued by the Bureau amending § 1026.43(e)(2), as provided by § 1026.43(e)(4)(iii). This final rule also revises this comment to note that the Bureau will amend this comment prior to the mandatory compliance date of a final rule issued by the Bureau amending § 1026.43(e)(2) to reflect the new status.[136]

The Bureau has made two substantive modifications to the proposal. The first is that this final rule links the expiration of the Temporary GSE QM loan definition to the ''mandatory compliance date'' of a final rule amending the General QM loan definition instead of to the ''effective date'' of such a final rule. Specifically, under this final rule, the Temporary GSE QM loan definition will be available only for covered transactions for which the creditor receives the consumer's application before the ''mandatory compliance date'' of a final rule issued by the Bureau amending the General QM loan definition, rather than covered transactions consummated on or before the ''effective date'' of such a final rule, as the Bureau proposed.

The Bureau is not adopting an ''overlap period'' in this final rule by keeping the Temporary GSE QM loan definition in effect *after* the date creditors are required to transition from the current General QM loan definition to the revised General QM loan definition, as some commenters suggested. This is because, in a final rule amending the General QM loan definition, after considering the comments in that rulemaking, the Bureau intends to establish an implementation period—*i.e.,* the time period after such a final rule is issued and before creditors are required to transition from the current General QM loan definition to the revised General QM loan definition—that provides the amount of time necessary to facilitate a smooth and orderly transition to a revised General QM loan definition. Establishing an ''overlap period'' that extends after the date creditors are required to transition from the current General QM loan definition to the revised General QM loan definition would keep the Temporary GSE QM loan definition in place longer than necessary to facilitate a smooth and orderly transition to a revised General QM loan definition. The Bureau seeks to maintain the Temporary GSE QM loan definition only as long as necessary to facilitate a smooth and orderly transition to a revised General QM loan definition, and no longer, because the Bureau concludes that the Temporary GSE QM loan definition has certain negative effects on the mortgage market, including stifling innovation and the development of competitive private-sector approaches to underwriting. The Bureau further concludes that, as long as the Temporary GSE QM loan definition continues to be in effect, the non-GSE private market is less likely to rebound and that the existence of the Temporary GSE QM loan definition may be limiting the development of the non-GSE private market. For these reasons, the Bureau concludes that it is appropriate for the Temporary GSE QM loan definition to remain in place no longer than the date creditors are required to transition from the current General QM loan definition to the revised General QM loan definition.

However, while the Bureau is not adopting an ''overlap period'' in this final rule by keeping the Temporary GSE QM loan definition in effect *after* the date creditors are required to transition from the current General QM loan definition to the revised General QM loan definition, the Bureau may choose, in a final rule amending the General QM loan definition, to adopt an ''optional early compliance period'' whereby the revised General QM loan definition would become available *before* the date creditors are required to transition from the current General QM loan definition to the revised General QM loan definition. Such an approach would accommodate those creditors that are able to transition to, and wish to start using, the revised General QM loan definition sooner than the date creditors are required to make the transition, a date the Bureau expects to select based on the time needed for the industry as a whole to make the transition. If the Bureau adopts such an optional early compliance period in a final rule amending the General QM loan definition, the revised General QM loan definition would become available on the ''effective date'' of such a final rule; it would coexist with the current General QM loan definition for a period of time; and then the current General QM loan definition would expire on the ''mandatory compliance date'' of such a final rule.[137] If the Bureau does not adopt an optional early compliance period in a final rule amending the General QM loan definition, the ''effective date'' and ''mandatory compliance date'' would be the same date. In this case, the revision from ''effective date'' to ''mandatory compliance date'' in this final rule would have no substantive effect.

The Bureau concludes that, to preserve the possibility of adopting an optional early compliance period in a final rule amending the General QM loan definition, it is appropriate for the Temporary GSE QM loan definition to expire on the mandatory compliance date of a final rule amending the General QM loan definition (*i.e.,* the end of the optional early compliance period) instead of on the effective date of such a final rule (*i.e.,* the beginning of the optional early compliance period). The Bureau expects that, if it were to adopt an optional early compliance period in a final rule amending the General QM loan definition, some creditors may not be ready to transition away from the Temporary GSE QM loan definition and to the revised General QM loan definition on the effective date. In contrast, because the Bureau intends to establish an adequate implementation period (as described above), it expects creditors to be ready to do so by the mandatory compliance date. Therefore, linking the expiration of the Temporary GSE QM loan definition to the mandatory compliance date of such a final rule will best ensure a smooth and orderly transition away from the Temporary GSE QM loan definition and toward the revised General QM loan definition.

Gap in coverage. The second substantive modification to the proposal addresses the concern several commenters raised about the gap around the effective date of final amendments to the General QM loan definition when, under the proposal, neither the Temporary GSE QM loan definition nor the revised General QM loan definition would have applied. This gap in coverage likely would have resulted in a temporary reduction in access to credit for some consumers because creditors would have been concerned that loans for which they receive an application within a few months of the effective date of final amendments to the General QM loan definition may close after that effective date and would

[136] The Bureau notes that the proposed extension to the Temporary GSE QM loan definition's sunset date does not apply to the temporary points-and-fees cure provision in § 1026.43(e)(3)(iii), which is also set to expire on January 10, 2021. Comments on the expiration date for the temporary points-and-fees cure provision at § 1026.43(e)(3)(iii) are outside the scope of this rulemaking.

[137] For example, the Bureau adopted an optional early compliance period in 2017 amendments to TRID. 82 FR 37656, 37656 (Aug. 11, 2017) (''The final rule is effective October 10, 2017. However, the mandatory compliance date is October 1, 2018.''); *see also id.* at 37763–37765. The details of an optional early compliance period for the General QM loan definition may differ from the 2017 TRID amendments.

not be eligible for either the Temporary GSE QM loan definition or the revised General QM loan definition. The Bureau did not intend that result when it issued the proposed rule.

In this final rule, the Bureau addresses this concern by providing that the Temporary GSE QM loan definition will be available only for covered transactions ''for which the creditor receives the consumer's application before'' the mandatory compliance date of final amendments to the General QM loan definition (rather than covered transactions ''consummated on or before'' the effective date of final amendments to the General QM loan definition, as the Bureau proposed). This approach harmonizes with the proposed effective date in the General QM Proposal, under which the revised General QM loan definition would apply to covered transactions for which the creditor receives the consumer's application on or after the effective date of a final rule amending the General QM loan definition. The Bureau concludes that aligning the sunset date with the proposed effective date of final amendments to the General QM loan definition based on the date the creditor received the consumer's application would address the Bureau's access-to-credit concern by preventing a gap between the two definitions.

For the reasons described above, the Bureau is not addressing the gap by extending the Temporary GSE QM loan definition beyond the date creditors are required to transition from the current General QM loan definition to the revised General QM loan definition, as some commenters suggested. The Bureau is also not addressing this gap by aligning the sunset date with the General QM Proposal based on the date of consummation of mortgages. The Bureau is concerned about this approach because, as this effective date draws closer, this approach would create uncertainty for creditors about which QM definition (*i.e.,* the Temporary GSE QM loan definition or the revised General QM loan definition) would apply to a particular loan, given that creditors would not know for certain when consummation would occur.

To address concerns raised by commenters that the meaning of ''application'' may be unclear if the Bureau aligned the sunset date with the effective date of final amendments to the General QM loan definition based on the date the creditor received the consumer's application, this final rule adds new comment 43(e)(4)–4. This new comment clarifies the meaning of application for purposes of § 1026.43(e)(4)(iii)(B).[138]

Regulation Z contains two definitions of ''application.'' Section 1026.2(a)(3)(i) defines ''application'' as the submission of a consumer's financial information for the purposes of obtaining an extension of credit. This definition applies to all transactions covered by Regulation Z. Section 1026.2(a)(3)(ii) also contains a more specific definition of ''application.'' Under this definition, for transactions subject to § 1026.19(e), (f), or (g)—*i.e.,* transactions subject to TRID—an application consists of the submission of the consumer's name, the consumer's income, the consumer's social security number to obtain a credit report, the property address, an estimate of the value of the property, and the mortgage loan amount sought. The more specific definition of application in § 1026.2(a)(3)(ii) applies not just for purposes of TRID, but extends to all transactions subject to TRID. Therefore, for transactions that are subject to the ATR/QM Rule and that are also subject to TRID, the Bureau concludes that the more specific definition applies for purposes of the ATR/QM Rule as well. However, for transactions that are subject to the ATR/QM Rule but that are not subject to TRID,[139] the Bureau finds that there may be ambiguity as to when the creditor received the consumer's application for purposes of the sunset date in § 1026.43(e)(4)(iii)(B). This potential ambiguity arises because the general definition of application in § 1026.2(a)(3)(i) is less precise than the TRID definition.

To address this potential ambiguity, new comment 43(e)(4)–4 clarifies that, for transactions that are not subject to TRID, creditors can determine the date the creditor received the consumer's application for purposes of § 1026.43(e)(4)(iii)(B) in accordance with either § 1026.2(a)(3)(i) or (ii). The Bureau concludes that this clarification is appropriate because it will facilitate compliance with § 1026.43(e)(4)(iii)(B).

The Bureau disagrees with the industry commenter's assertion that it would be problematic to align the sunset date with the proposed effective date in the General QM Proposal based on the date the creditor received the consumer's application. As noted, that commenter asserted that because creditors do not determine QM status at the time of application, defining a loan as a Temporary GSE QM at the time of application may create problems if the loan is later changed and, as a result, is no longer eligible for sale at the time of consummation. However, under the Bureau's approach, loans would not be defined as QMs at the time of application. Rather, the application date would determine whether the loan is eligible for the Temporary GSE QM loan definition or whether it is eligible for the revised General QM loan definition.

Other comments on the sunset date. As noted above, the Bureau declines to extend the Temporary GSE QM loan definition beyond the mandatory compliance date of final amendments to the General QM loan definition. The Bureau recognizes that creditors will need to update their business processes and information technology systems as they prepare to comply with the revised General QM loan definition, and that an update process often includes making planned system changes, testing those changes, and making further revisions. The Bureau also acknowledges that secondary market participants will need to adjust to the revised definition.

However, as noted above, the Bureau plans, in a final rule amending the General QM loan definition, to establish an implementation period—*i.e.,* the time period after such a final rule is issued and before creditors are required to transition from the current General QM loan definition to the revised General QM loan definition—that provides the amount of time necessary to facilitate a smooth and orderly transition to a revised General QM loan definition, after considering the comments in that rulemaking. Thus, establishing an overlap period beyond this implementation period would keep the Temporary GSE QM loan definition in place longer than necessary to facilitate a smooth and orderly transition to a revised General QM loan definition. The Bureau seeks to maintain the Temporary GSE QM loan definition only as long as necessary to facilitate a smooth and orderly transition to a revised General QM loan definition, and no longer, because the Bureau concludes that the Temporary GSE QM loan definition has certain negative effects on the mortgage market, as noted above.

[138] This final rule also renumbers previous comments 43(e)(4)–4 and –5 as 43(e)(4)–5 and –6, respectively.

[139] The ATR/QM Rule generally applies to closed-end consumer credit transactions that are secured by a dwelling, as defined in 12 CFR 1026.2(a)(19), including any real property attached to a dwelling. 12 CFR 1026.43(a). Therefore, the ATR/QM Rule applies to a dwelling, as defined in § 1026.19(a), whether or not it is attached to real property. In contrast, TRID generally applies to closed-end consumer credit transactions secured by real property or a cooperative unit. 12 CFR 1026.19(e)(1)(i). Therefore, some transactions that are a secured by a dwelling that is not considered real property under State or other applicable law will be subject to the ATR/QM Rule but not to TRID.

In the Bureau's view, commenters have not established why an overlap period would be necessary to facilitate a smooth and orderly transition to a revised General QM loan definition when the Bureau establishes a sufficient implementation period for the final rule amending that definition. Commenters expressed general concerns that unforeseen compliance issues may arise after the implementation period ends, but the same is true in adapting to any new rule of this magnitude and, as stated above, the Bureau intends to adopt an implementation period that gives creditors and the secondary market enough time to prepare to comply with the revised definition.[140] Commenters also suggested that an overlap period would reduce the potential that a revised General QM loan definition could disrupt the mortgage market and affect credit access due to unforeseen changes in the economy or the mortgage market due to the COVID–19 pandemic. However, based on its analysis of the current state of the mortgage market, as described in part II.D above, the Bureau does not believe that current conditions in the mortgage market justify a longer extension on these grounds, particularly in light of the Bureau's concerns about the negative effects of the Temporary GSE QM loan definition on the mortgage market.

The Bureau also declines to extend the Temporary GSE QM loan definition indefinitely in this rulemaking and determine its sunset date in a final rule amending the General QM loan definition, as the two consumer advocate commenters suggest.[141] The Bureau has not yet issued a final rule amending the General QM loan definition, so the contours of a revised General QM loan definition are not yet clear. However, the Bureau determines that it is nevertheless appropriate for this final rule to provide that the Temporary GSE QM loan definition will expire on the mandatory compliance date of a final rule amending the General QM loan definition. As noted above in the Bureau's response to comments recommending an overlap period, the Bureau plans, in a final rule amending the General QM loan definition, to establish an implementation period that provides the amount of time necessary to facilitate a smooth and orderly transition to a revised General QM loan definition. Establishing a sufficient implementation period—based on the comments received on the effective date the Bureau proposed in the General QM Proposal—will help ensure a smooth transition away from the Temporary GSE QM loan definition and toward the revised General QM loan definition. Second, as noted above in the Bureau's response to the comment recommending an overlap period to address the effective date gap issue, the Bureau seeks to maintain the Temporary GSE QM loan definition only as long as necessary to facilitate a smooth and orderly transition to a revised General QM loan definition, and no longer, because the Bureau concludes that the Temporary GSE QM loan definition has certain negative effects on the mortgage market. Third, if market conditions change or other circumstances arise between now and the time the Bureau issues a final rule amending the General QM loan definition, the Bureau could choose to extend the Temporary GSE QM loan definition for a longer period of time.

The Bureau also declines to extend the sunset date in § 1026.43(e)(4)(iii)(B) to a date certain, as some commenters suggested. The Bureau is not extending the sunset date to a date certain because the chosen date could result in too long or too short an extension. The Bureau is concerned that too short an extension may not provide the Bureau with adequate time to finalize amendments to the General QM loan definition and creditors with enough time to bring their operations into compliance with any amendments adopted by the Bureau. At the same time, the Bureau is concerned that too long an extension would have the same type of negative effects as the Bureau describes above regarding making the Temporary GSE QM loan definition permanent, without any offsetting benefits because a longer extension is not needed to provide the Bureau with adequate time to consider, propose, and promulgate amendments to the General QM loan definition or industry to implement those amendments.

Conservatorship clause. The Bureau also declines to eliminate the conservatorship clause in § 1026.43(e)(4)(ii)(A). When the Bureau adopted the January 2013 Final Rule, the FHFA's conservatorship of the GSEs was central to its willingness to presume that loans that are eligible for purchase, guarantee, or insurance by the GSEs would be originated with appropriate consideration of consumers' ability to repay.[142] The Bureau declines to eliminate the conservatorship clause because the Bureau is concerned about presuming that loans eligible for purchase or guarantee by either of the GSEs have been originated with appropriate consideration of the consumer's ability to repay, if the GSEs are not under conservatorship. Furthermore, as the Bureau stated in the Extension Proposal, the Bureau expects that the conservatorships will remain in place until the Temporary GSE QM loan definition would expire under this final rule. As the Bureau stated in the Extension Proposal, in the event that it appears that a final rule amending the General QM loan definition will not be in effect at the time the conservatorship of one or both of the GSEs is terminated, the Bureau will evaluate at that point what, if any, steps to take in response to such a termination of conservatorship.

As with the January 2013 Final Rule, the Bureau issues this final rule pursuant to its authority under TILA sections 129C(b)(3)(B)(i) and 105(a) and Dodd-Frank Act section 1022(b)(1). For the reasons described above in part V.D, the Bureau determines that this final rule's extension of the Temporary GSE QM loan definition's sunset date is necessary and proper to ensure that responsible, affordable mortgage credit remains available to consumers in a manner consistent with the purposes of TILA section 129C, as well as necessary and appropriate to effectuate the purposes of TILA section 129C—including the purpose of assuring that consumers are offered and receive residential mortgage loans on terms that reasonably reflect their ability to repay the loans and that are understandable and not unfair, deceptive, or abusive. For these same reasons, the Bureau determines that the extension is necessary to effectuate the purposes of

[140] As noted above, the Bureau may consider adopting an optional early compliance period in a final rule amending the General QM loan definition. An optional early compliance period would allow creditors who are ready to begin using the revised General QM loan definition early to do so—and to work out unforeseen compliance issues that arise before the Temporary GSE QM loan definition expires—without the Bureau having to extend the Temporary GSE QM loan definition beyond the end of the implementation period.

[141] No commenter recommended that the Bureau extend the Temporary GSE QM loan definition indefinitely without stating that the Bureau should determine the Temporary GSE QM loan definition's sunset date in a final rule amending the General QM loan definition. The Bureau declines to do so for the reasons stated in the Extension Proposal. *See* 85 FR 41448, 41457 (July 10, 2020).

[142] 78 FR 6408, 6534 (Jan. 13, 2013) (''In light of this significant Federal role and the government's focus on affordability in the wake of the mortgage crisis, the Bureau believes it is appropriate, for the time being, to presume that loans that are eligible for purchase, guarantee, or insurance by the designated Federal agencies and the GSEs while under conservatorship have been originated with appropriate consideration of consumers' ability to repay, where those loans also satisfy the requirements of § 1026.43(e)(2) concerning restrictions on product features and total points and fees limitations.'').

TILA, which include, among other things, the above-described purpose of TILA section 129C.

VII. Dodd-Frank Act Section 1022(b) Analysis

A. Overview

As discussed above, this final rule will delay the scheduled expiration of the Temporary GSE QM loan definition from January 10, 2021 to the mandatory compliance date of a final rule issued by the Bureau amending the General QM loan definition. The Bureau's objective with this final rule is to facilitate a smooth and orderly transition away from the Temporary GSE QM loan definition and to ensure access to responsible, affordable mortgage credit upon its expiration.

In developing this final rule, the Bureau has considered the potential benefits, costs, and impacts as required by section 1022(b)(2)(A) of the Dodd-Frank Act. Specifically, section 1022(b)(2)(A) of the Dodd-Frank Act calls for the Bureau to consider the potential benefits and costs of a regulation to consumers and covered persons, including the potential reduction of access by consumers to consumer financial products or services, the impact on depository institutions and credit unions with $10 billion or less in total assets as described in section 1026 of the Dodd-Frank Act, and the impact on consumers in rural areas. The Bureau consulted with appropriate Federal agencies regarding the consistency of the proposed rule with prudential, market, or systemic objectives administered by such agencies as required by section 1022(b)(2)(B) of the Dodd-Frank Act.

1. Data and Evidence

The discussion in these impact analyses relies on data from a range of sources. These include data collected or developed by the Bureau, including HMDA [143] and NMDB [144] data, as well as data obtained from industry, other regulatory agencies, and other publicly available sources. The Bureau also conducted the assessment and issued the Assessment Report as required under section 1022(d) of the Dodd-Frank Act. The Assessment Report provides quantitative and qualitative information on questions relevant to this final rule, including the extent to which DTI ratios are probative of a consumer's ability to repay, the effect of rebuttable-presumption status relative to safe-harbor status on access to credit, and the effect of QM status relative to non-QM status on access to credit. Consultations with other regulatory agencies, industry, and research organizations inform the Bureau's impact analyses.

The data the Bureau relied upon provide detailed information on the number, characteristics, and performance of mortgage loans originated in recent years. However, they do not provide information on creditor costs. As a result, analyses of any impacts of the Extension Proposal on creditor costs, particularly realized costs of complying with underwriting criteria or potential costs from legal liability are based on more qualitative information. Similarly, estimates of any changes in burden on consumers resulting from increased or decreased documentation requirements are based on qualitative information.

In the Extension Proposal, the Bureau set forth a preliminary analysis of these effects and requested comments and submissions of additional data that could inform the Bureau's analysis of the benefits, costs, and impacts of the proposal. The Bureau received several comments on its analysis. Several commenters agreed with the Bureau's estimates of the baseline effects of the Temporary GSE QM loan definition's expiration, and the potential benefits to covered persons and consumers under the Extension Proposal. Two consumer advocate commenters that submitted a joint comment letter argued for a more complete analysis of alternatives, including an indefinite delay of the scheduled expiration of the Temporary GSE QM loan definition as well as a comparison of shorter or longer delays of the expiration.

The Bureau notes that the potential benefits and costs to covered persons and consumers discussed in the Extension Proposal were estimated for the duration of the Temporary GSE QM loan definition, and thus encompass the possibilities of shorter, longer, or indefinite delays of expiration. In addition, these commenters argued that because the mortgage finance market is in flux, the Bureau should redo its analysis of benefits and costs when more data are available. In the Extension Proposal, the Bureau acknowledged the important economic disruptions and mortgage market changes due to the COVID–19 pandemic. However, the Bureau did not receive new data from commenters to inform its analysis and it does not anticipate that market changes or other circumstances will significantly alter its estimates of the benefits and costs of this final rule. These commenters also stated that the Bureau must fulfill its statutory obligation ''to study ability-to-repay'' before amending the ATR/QM Rule. However, the Bureau has already done so by completing the Assessment Report and through its monitoring of the performance of mortgage loans and the availability of mortgage credit.

2. Description of the Baseline

The Bureau considers the benefits, costs, and impacts of this final rule against the baseline in which the Bureau takes no action and the Temporary GSE QM loan definition expires on January 10, 2021, or when the GSEs exit conservatorship, whichever occurs first. Under this final rule, the Temporary GSE QM loan definition will expire when the GSEs exit conservatorship or on the mandatory compliance date of a final rule issued by the Bureau amending the General QM loan definition, whichever occurs first. As a result, this final rule's direct market impacts will occur only if the GSEs remain in conservatorship beyond January 10, 2021. The impact analyses assume the GSEs will remain in conservatorship for the relevant period of time. Unless described otherwise, estimates of loan counts under the baseline and estimates of the benefits and costs of this final rule relative to the baseline are annual estimates for the duration of the Temporary GSE QM loan definition.

Under the baseline, when the Temporary GSE QM loan definition expires, conventional loans could only receive QM status under the Bureau's rules by underwriting according to the General QM requirements, Small Creditor QM requirements, Balloon Payment QM requirements, or the expanded portfolio QM amendments created by the EGRRCPA. The General QM loan definition, which would be the

[143] HMDA requires many financial institutions to maintain, report, and publicly disclose loan-level information about mortgages. These data help show whether creditors are serving the housing needs of their communities; they give public officials information that helps them make decisions and policies; and they shed light on lending patterns that could be discriminatory. HMDA was originally enacted by Congress in 1975 and is implemented by Regulation C. *See* Bureau of Consumer Fin. Prot., *Mortgage Data* (*HMDA*), *https://www.consumerfinance.gov/data-research/hmda/*.

[144] The NMDB, jointly developed by the FHFA and the Bureau, provides de-identified loan characteristics and performance information for a 5 percent sample of all mortgage originations from 1998 to the present, supplemented by de-identified loan and borrower characteristics from Federal administrative sources and credit reporting data. *See* Bureau of Consumer Fin. Prot., *Sources and Uses of Data at the Bureau of Consumer Financial Protection,* at 55–56 (Sept. 2018), *https://www.consumerfinance.gov/documents/6850/bcfp_sources-uses-of-data.pdf.* Differences in total market size estimates between NMDB data and HMDA data are attributable to differences in coverage and data construction methodology.

only type of QM available to larger creditors following the expiration of the Temporary GSE QM loan definition, requires that consumers' DTI ratio not exceed 43 percent and requires creditors to determine debt and income in accordance with the standards in appendix Q of Regulation Z.

As stated above in part V.C, the Bureau anticipates that, under the baseline in which the Temporary GSE QM loan definition expires, there are two main types of conventional loans that would be affected: High-DTI GSE loans (those with DTI ratios above 43 percent) and GSE-eligible loans without appendix Q-required documentation. Leaving the current fixed sunset date in place would affect these loans because they are currently originated as QM loans due to the Temporary GSE QM loan definition but would not be originated as General QM loans, and may not be originated at all, if the Temporary GSE QM loan definition were to expire before amendments to the General QM loan definition are in effect. This section 1022 analysis refers to these loans as potentially displaced loans.

The Extension Proposal's analysis of the potential market impact of the Temporary GSE QM loan definition's expiration cited data and analysis from the Bureau's ANPR, as described below. None of the comments on the Extension Proposal challenged the data or analysis from the ANPR or the Extension Proposal related to the potential market impacts of the Temporary GSE QM loan definition's expiration.[145] The Bureau concludes that the data and analysis in the Extension Proposal and ANPR provide an appropriate estimate of the potential impact of the Temporary GSE QM loan definition's expiration for this final rule.

High-DTI GSE Loans. The ANPR provided an estimate of the number of loans potentially affected by the expiration of the Temporary GSE QM loan definition.[146] In providing the estimate, the ANPR focused on loans that fall within the Temporary GSE QM loan definition but not the General QM loan definition because they have a DTI ratio above 43 percent. This final rule refers to these loans as High-DTI GSE loans. Based on NMDB data, the Bureau estimated that there were approximately 6.01 million closed-end first-lien residential mortgage originations in the United States in 2018.[147] Based on supplemental data provided by FHFA, the Bureau estimated that the GSEs purchased or guaranteed 52 percent—roughly 3.12 million—of those loans.[148] Of those 3.12 million loans, the Bureau estimated that 31 percent—approximately 957,000 loans—had DTI ratios greater than 43 percent.[149] Thus, the Bureau estimated that as a result of the General QM loan definition's 43 percent DTI limit, approximately 957,000 loans—16 percent of all closed-end first-lien residential mortgage originations in 2018—were High-DTI GSE loans.[150] This estimate does not include Temporary GSE QM loans that were eligible for purchase by the GSEs but were not sold to the GSEs.

Loans Without Appendix Q-Required Documentation That Are Otherwise GSE-Eligible. In addition to High-DTI GSE loans, the Bureau noted that an additional, smaller number of Temporary GSE QM loans with DTI ratios of 43 percent or less when calculated using GSE underwriting guidelines would not fall within the General QM loan definition because their method of documenting and verifying income or debt is incompatible with appendix Q.[151] These loans would also likely be affected if the Temporary GSE QM loan definition were to expire before amendments to the General QM loan definition are in effect. As explained in the Extension Proposal, the Bureau understands, from extensive public feedback and its own experience, that appendix Q does not specifically address whether and how to document and include certain forms of income. The Bureau understands these concerns are particularly acute for self-employed consumers, consumers with part-time employment, and consumers with irregular or unusual income streams.[152] As a result, these consumers' access to credit may be affected if the Temporary GSE QM loan definition were to expire before amendments to the General QM loan definition are in effect.

The Bureau's analysis of the market under the baseline focuses on High-DTI GSE loans because the Bureau estimates that most potentially displaced loans are High-DTI GSE loans. The Bureau also lacks the loan-level documentation and underwriting data necessary to estimate with precision the number of potentially displaced loans that do not fall within the other General QM loan requirements and are not High-DTI GSE loans. However, the Assessment Report did not find evidence of substantial numbers of loans in the non-GSE-eligible jumbo market being displaced when appendix Q documentation requirements became effective in 2014.[153] Further, the Assessment Report found evidence of only a limited reduction in the approval rate of self-employed applicants for non-GSE eligible mortgages.[154] Based on this evidence, along with qualitative comparisons of GSE and appendix Q documentation requirements and available data on the prevalence of borrowers with non-traditional or difficult-to-document income (*e.g.,* self-employed borrowers, retired borrowers, those with irregular income streams), the Bureau estimates this second category of potentially displaced loans is considerably less numerous than the category of High-DTI GSE loans. Nevertheless, the Bureau believes that, for some borrowers, there would be a meaningful impact on their access to credit because their method of documenting and verifying income or debt is incompatible with appendix Q.

Additional Effects on Loans Not Displaced. The Extension Proposal explained that, while the most significant market effects under the baseline are displaced loans, loans that continue to be originated as QM loans after the expiration of the Temporary

[145] As noted above in part VII.A.1, two consumer advocate commenters that submitted a joint comment letter argued for a more complete analysis of reasonable alternatives and that the Bureau should redo its analysis of benefits and costs when more data is available. However, these commenters did not challenge the Bureau's estimates of the potential market impacts of the Temporary GSE QM loan definition's expiration.

[146] 84 FR 37155, 37158–59 (July 31, 2019).

[147] *Id.*

[148] *Id.* at 37159.

[149] *Id.* The Bureau estimates that 616,000 of these loans were for home purchases, and 341,000 were refinance loans. In addition, the Bureau estimates that the share of these loans with DTI ratios over 45 percent has varied over time due to changes in market conditions and GSE underwriting standards, rising from 47 percent in 2016 to 56 percent in 2017, and further to 69 percent in 2018.

[150] *Id.*

[151] *Id.* at 37159 n.58. Where these types of loans have DTI ratios above 43 percent, they would be captured in the estimate above relating to High-DTI GSE loans.

[152] For example, in qualitative responses to the Bureau's Lender Survey conducted as part of the Assessment Report, underwriting for self-employed consumers was one of the most frequently reported sources of difficulty in originating mortgages using appendix Q. These concerns were also raised in comments submitted in response to the Assessment RFI, noting that appendix Q is ambiguous with respect to how to treat income for consumers who are self-employed, have irregular income, or want to use asset depletion as income. *See* Assessment Report, *supra* note 27, at 200.

[153] *Id.* at 107 (''For context, total jumbo purchase originations increased from an estimated 108,700 to 130,200 between 2013 and 2014, based on nationally representative NMDB data.'').

[154] *Id.* at 118 (''The Application Data indicates that, notwithstanding concerns that have been expressed about the challenge of documenting and verifying income for self-employed borrowers under the General QM standard and the documentation requirements contained in appendix Q to the Rule, approval rates for non-High DTI, non-GSE eligible self-employed borrowers have decreased only slightly, by two percentage points.'').

GSE QM loan definition would also be affected. After the sunset date, absent changes to the General QM loan definition, all loans with DTI ratios at or below 43 percent that are or would have been purchased and guaranteed as GSE loans under the Temporary GSE QM loan definition—approximately 2.16 million loans in 2018—and that continue to be originated as General QM loans after the provision expires would be required to verify income and debts according to appendix Q, rather than only according to GSE guidelines. Given the concerns raised about appendix Q's ambiguity and lack of flexibility, this would likely entail both increased documentation burden for some consumers as well as increased costs or time-to-origination for creditors on some loans.[155]

B. Benefits and Costs to Covered Persons and Consumers

1. Benefits to Consumers

The primary benefit to consumers of this final rule is the continued availability of High-DTI GSE loans during the period of the extension. Given the large number of consumers who obtain such loans rather than available alternatives, including loans from the private non-GSE market and FHA loans, these GSE loans may be preferred due to their pricing, underwriting requirements, or other features.

Under the baseline, a sizeable share of potentially displaced High-DTI GSE loans may instead be originated as FHA loans. Thus, under this final rule, any price advantage of GSE loans over FHA loans will be a realized benefit to consumers. Based on the Bureau's analysis of 2018 HMDA data, FHA loans comparable to the loans received by High-DTI GSE borrowers, based on loan purpose, credit score, and combined LTV ratio, on average have $3,000 to $5,000 higher upfront total loan costs. APRs provide an alternative, annualized measure of costs over the life of a loan. FHA borrowers typically pay different APRs, which can be higher or lower than APRs for GSE loans depending on a borrower's credit score and LTV. Borrowers with credit scores at or above 720 pay an APR 30 to 60 basis points higher than borrowers of comparable GSE loans, leading to higher monthly payments over the life of the loan. However, FHA borrowers with credit scores below 680 and combined LTVs exceeding 85 percent pay an APR 20 to 40 basis points lower than borrowers of comparable GSE loans, leading to lower monthly payments over the life of the loan.[156] For a loan size of $250,000, these APR differences amount to $2,800 to $5,600 in additional total monthly payments over the first five years of mortgage payments for borrowers with credit scores above 720, and $1,900 to $3,800 in reduced total monthly payments over five years for borrowers with credit scores below 680 and LTVs exceeding 85 percent.[157] Thus all FHA borrowers are likely to pay higher costs at origination, while some pay higher monthly mortgage payments, and others pay lower monthly mortgage payments. Assuming, for comparison, that all 957,000 High-DTI GSE loans would be made as FHA loans in the absence of this final rule, the average of the upfront pricing estimates implies total savings for consumers of roughly $4 billion per year on upfront costs while the Temporary GSE QM loan definition remains in effect.[158] While this comparison assumed all potentially displaced loans would be made as FHA loans, higher costs (either upfront or in monthly payments) are likely to prevent some borrowers from obtaining loans at all.

In the absence of this final rule, some of these potentially displaced consumers, particularly those with higher credit scores and the resources to make larger down payments, likely would be able to obtain credit in the non-GSE private market at a cost comparable or slightly higher than the costs for GSE loans, but below the cost of an FHA loan. As a result, the above cost comparisons between GSE and FHA loans provide an estimated upper bound on pricing benefits to consumers of this final rule. However, under the baseline, some potentially displaced consumers may not obtain loans and thus will experience benefits of credit access under this final rule.[159] As discussed above, the Assessment Report found that the January 2013 Final Rule eliminated between 63 and 70 percent of high-DTI home purchase loans that were not Temporary GSE QM loans.[160]

This final rule will also benefit those consumers with incomes difficult to document using appendix Q to obtain General QM status, as the Temporary GSE QM loan definition continues to allow documentation of income and debt through GSE standards. The greater flexibility of GSE documentation standards likely reduces effort and costs for these consumers under this final rule, and in the most difficult cases in which borrowers' documentation cannot satisfy appendix Q, this final rule will allow consumers to receive Temporary GSE QM loans rather than potential FHA or non-QM alternatives. These consumers will likely benefit from cost savings under this final rule, similar to those for High-DTI consumers discussed above.

2. Benefits to Covered Persons

This final rule's primary benefit to covered persons, specifically mortgage creditors, is the continued profits from originating High-DTI conventional QM loans. Under the baseline, creditors would be unable to originate such loans under the Temporary GSE QM loan definition after January 10, 2021 and would instead have to originate loans with comparable DTI ratios as FHA, Small Creditor QM, or non-QM loans, or originate at lower DTI ratios as conventional General QM loans. Creditors' current preference for originating large numbers of High-DTI Temporary GSE QM loans likely reflects advantages in a combination of costs or guarantee fees (particularly relative to FHA loans), liquidity (particularly relative to Small Creditor QM), or litigation and credit risk (particularly relative to non-QM). Moreover, QM loans—including Temporary GSE QM loans—are exempt from the Dodd-Frank Act risk retention requirement whereby creditors that securitize mortgage loans are required to retain at least 5 percent of the credit risk of the security, which adds significant cost. As a result, this final rule conveys benefits to mortgage creditors originating Temporary GSE QM loans on each of these dimensions.

[155] *See* part V.B for additional discussion of concerns raised about appendix Q.

[156] The Bureau expects consumers could continue to obtain FHA loans where such loans were cheaper or preferred for other reasons.

[157] Based on NMDB data, the Bureau estimates that the average loan amount among High-DTI GSE borrowers in 2018 was $250,000. While the time to repayment for mortgages varies with economic conditions, the Bureau estimates that half of mortgages are typically closed or paid off five to seven years into repayment. Payment comparisons based on typical 2018 HMDA APRs for GSE loans, 5 percent for borrowers with credit scores over 720, and 6 percent for borrowers with credit scores below 680 and LTVs exceeding 85 percent.

[158] This approximation assumes $4,000 in savings from total loan costs for all 957,000 consumers. Actual expected savings would vary substantially based on loan and credit characteristics, consumer choices, and market conditions.

[159] In particular, the Assessment Report concluded that some borrowers with strong credit characteristics may no longer be able to obtain conventional QM loans, despite likely possessing the ability to repay such loans. Assessment Report, *supra* note 27, at 150 (''Together, these findings suggest that the observed decrease in access to credit in this segment was likely driven by lenders' desire to avoid the risk of litigation by consumers asserting a violation of the ATR requirement or other risks associated with that requirement, rather than by rejections of borrowers who were unlikely to repay the loan.'').

[160] *See id.* at 10–11, 117, 131–47.

In addition, for those lower-DTI GSE loans which could satisfy General QM requirements, creditors may realize cost savings from continuing to underwrite loans using only the more flexible GSE documentation standards as compared to the appendix Q underwriting standards required for General QM loans. For GSE consumers unable to provide documentation compatible with appendix Q, this final rule allows such loans to continue receiving QM status, providing comparable benefits to creditors as described for High-DTI GSE loans above.

Finally, those creditors whose business models rely most heavily on originating High-DTI GSE loans will likely see a competitive benefit from the continued ability to originate such loans as Temporary GSE QM loans. This is effectively a transfer in market share to these creditors from those who primarily originate FHA or private non-GSE loans, who likely would have gained market share after the expiration of the Temporary GSE QM loan definition.

3. Costs to Consumers

The extension of the Temporary GSE QM loan definition could delay the development of the non-QM market, particularly new mortgage products which may have become available if the Temporary GSE QM loan definition had been allowed to expire. To the extent that some consumers would prefer some of these products to GSE loans due to pricing, documentation flexibility, or other advantages, the delay of their development will be a cost to consumers of this final rule.

In addition, consumers who would have obtained non-QM loans under the baseline but instead obtain QM loans under this final rule forgo the benefit of retaining the ATR causes of action and defenses against foreclosure.

4. Costs to Covered Persons

This final rule's most sizable costs to covered persons are effectively transfers between lenders for the duration of the extension, reflecting reduced loan origination volume for lenders who primarily originate FHA or private non-GSE loans and increased origination volume for lenders who primarily originate GSE loans. Business models vary substantially within market segments, with portfolio lenders and lenders originating non-QM loans most likely to experience a delay in market share gains that would have been possible if the Temporary GSE QM loan definition had been allowed to expire, while GSE-focused bank and non-bank lenders are likely to maintain market share that might be lost sooner in the absence of this final rule.

5. Other Benefits and Costs

In delaying the Temporary GSE QM loan definition's expiration, this final rule will delay any effects of the expiration on the development of the secondary market for private (non-GSE) mortgage loan securities. When the Temporary GSE QM loan definition expires, those loans that do not fit within the General QM loan definition represent a potential new market for private securitizations. Thus, this final rule will reduce the scope of the potential non-QM market for the duration of the extension, likely lowering profits and revenues for participants in the private secondary market. This will effectively be a transfer from these private secondary market participants to participants in the agency secondary market.

Impact on Depository Institutions and Credit Unions With $10 Billion or Less in Total Assets, as Described in Section 1026

This final rule's expected impact on depository institutions and credit unions that are also creditors making covered loans (depository creditors) with $10 billion or less in total assets is similar to the expected impact on larger creditors and on non-depository creditors. As discussed in part VII.B.4 (Costs to Covered Persons), depository creditors originating portfolio loans may experience a delay in potential market share gains that would occur in the absence of this final rule. In addition, those smaller creditors originating portfolio loans can originate High-DTI Small Creditor QM loans under the rule, and thus may rely less on the Temporary GSE QM loan definition for originating High-DTI loans. If the expiration of the Temporary GSE QM loan definition would confer a competitive advantage to these small creditors in their origination of High-DTI loans, this final rule will delay this outcome.

Conversely, those small creditors that primarily rely on the GSEs as a secondary market outlet because they do not have the capacity to hold numerous loans in portfolio or the infrastructure or scale to securitize loans may continue to benefit from the ability to make High-DTI GSE loans as Temporary GSE QM loans. In the absence of this final rule, these creditors would be limited to originating GSE loans as QMs only with DTI at or below 43 percent under the General QM loan definition. These creditors may also originate FHA, VA, or USDA loans or non-QM loans for private securitizations, likely at a higher cost relative to Temporary GSE QM loans.

Impact on Rural Areas

This final rule's expected impact on rural areas is similar to the expected impact on non-rural areas. Based on 2018 HMDA data, the Bureau estimates that High-DTI conventional purchase mortgages are comparably likely to be reported as initially sold to the GSEs in rural areas (52.5 percent) as in non-rural areas (52.0 percent).[161]

VIII. Regulatory Flexibility Act Analysis

The Regulatory Flexibility Act (RFA), as amended by the Small Business Regulatory Enforcement Fairness Act of 1996, requires each agency to consider the potential impact of its regulations on small entities, including small businesses, small governmental units, and small not-for-profit organizations.[162] The RFA defines a ''small business'' as a business that meets the size standard developed by the Small Business Administration pursuant to the Small Business Act.[163]

The RFA generally requires an agency to conduct an initial regulatory flexibility analysis (IRFA) and a final regulatory flexibility analysis (FRFA) of any rule subject to notice-and-comment rulemaking requirements, unless the agency certifies that the rule would not have a significant economic impact on a substantial number of small entities.[164] The Bureau also is subject to certain additional procedures under the RFA involving the convening of a panel to consult with small business representatives prior to proposing a rule for which an IRFA is required.[165]

In the Extension Proposal, the Bureau certified that an IRFA was not required because the proposal, if adopted, would not have a significant economic impact on a substantial number of small entities. The Bureau did not receive comments on its analysis of the impact of the Extension Proposal on small entities. The Bureau does not expect this final rule to impose costs on small entities relative to the baseline. Under

[161] These statistics are estimated based on originations from the first nine months of the year, to allow time for loans to be sold before HMDA reporting deadlines. In addition, a higher share of High-DTI conventional purchase non-rural loans (33.3 percent) report being sold to other non-GSE purchasers compared to rural loans (22.3 percent).

[162] 5 U.S.C. 601 *et seq.*

[163] 5 U.S.C. 601(3) (the Bureau may establish an alternative definition after consultation with the Small Business Administration and an opportunity for public comment).

[164] 5 U.S.C. 603 through 605.

[165] 5 U.S.C. 609.

the baseline, the Temporary GSE QM loan definition expires, and therefore no creditor—including small entities—would be able to originate QM loans under that definition. Under this final rule, certain small entities that would otherwise not be able to originate QM loans under that definition will be able to originate such loans with QM status. Thus, the Bureau anticipates that this final rule will only reduce the burden on small entities relative to the baseline.

Accordingly, the Director certifies that this final rule will not have a significant economic impact on a substantial number of small entities. Thus, a FRFA is not required for this final rule.

IX. Paperwork Reduction Act

Under the Paperwork Reduction Act of 1995 (PRA),[166] Federal agencies are generally required to seek, prior to implementation, approval from the Office of Management and Budget (OMB) for information collection requirements. Under the PRA, the Bureau may not conduct or sponsor, and, notwithstanding any other provision of law, a person is not required to respond to, an information collection unless the information collection displays a valid control number assigned by OMB.

The Bureau has determined that this final rule does not contain any new or substantively revised information collection requirements other than those previously approved by OMB under that OMB control number 3170–0015. This final rule will amend 12 CFR part 1026 (Regulation Z), which implements TILA. OMB control number 3170–0015 is the Bureau's OMB control number for Regulation Z.

X. Congressional Review Act

Pursuant to the Congressional Review Act,[167] the Bureau will submit a report containing this rule and other required information to the U.S. Senate, the U.S. House of Representatives, and the Comptroller General of the United States at least 60 days prior to the rule's published effective date. The Office of Information and Regulatory Affairs has designated this rule as a ''major rule'' as defined by 5 U.S.C. 804(2).

XI. Signing Authority

The Director of the Bureau, having reviewed and approved this document, is delegating the authority to electronically sign this document to Laura Galban, a Bureau Federal Register Liaison, for purposes of publication in the **Federal Register**.

[166] 44 U.S.C. 3501 *et seq.*

[167] 5 U.S.C. 801 *et seq.*

List of Subjects in 12 CFR Part 1026

Advertising, Banking, Banks, Consumer protection, Credit, Credit unions, Mortgages, National banks, Reporting and recordkeeping requirements, Savings associations, Truth-in-lending.

Authority and Issuance

For the reasons set forth above, the Bureau amends Regulation Z, 12 CFR part 1026, as set forth below:

PART 1026—TRUTH IN LENDING (REGULATION Z)

■ 1. The authority citation for part 1026 continues to read as follows:

Authority: 12 U.S.C. 2601, 2603–2605, 2607, 2609, 2617, 3353, 5511, 5512, 5532, 5581; 15 U.S.C. 1601 *et seq.*

Subpart E—Special Rules for Certain Home Mortgage Transactions

■ 2. Amend § 1026.43 by revising paragraph (e)(4)(iii)(B) to read as follows:

§ 1026.43 Minimum standards for transactions secured by a dwelling.

* * * * *

(e) * * *

(4) * * *

(iii) * * *

(B) Unless otherwise expired under paragraph (e)(4)(iii)(A) of this section, the special rules in this paragraph (e)(4) are available only for covered transactions for which the creditor receives the consumer's application before the mandatory compliance date of a final rule issued by the Bureau amending paragraph (e)(2) of this section. The Bureau will also amend this paragraph prior to that mandatory compliance date to reflect the new status.

* * * * *

■ 3. In Supplement I to Part 1026—Official Interpretations, under *Section 1026.43—Minimum Standards for Transactions Secured by a Dwelling,* revise *43(e)(4) Qualified mortgage defined—special rules* to read as follows:

Supplement I to Part 1026—Official Interpretations

* * * * *

Section 1026.43—Minimum standards for transactions secured by a dwelling.

* * * * *

43(e)(4) Qualified mortgage defined—special rules.

1. *Alternative definition.* Subject to the sunset provided under § 1026.43(e)(4)(iii), § 1026.43(e)(4) provides an alternative definition of qualified mortgage to the definition provided in § 1026.43(e)(2). To be a qualified mortgage under § 1026.43(e)(4), the transaction must satisfy the requirements under § 1026.43(e)(2)(i) through (iii), in addition to being one of the types of loans specified in § 1026.43(e)(4)(ii)(A) through (E).

2. *Termination of conservatorship.* Section 1026.43(e)(4)(ii)(A) requires that a covered transaction be eligible for purchase or guarantee by the Federal National Mortgage Association (Fannie Mae) or the Federal Home Loan Mortgage Corporation (Freddie Mac) (or any limited-life regulatory entity succeeding the charter of either) operating under the conservatorship or receivership of the Federal Housing Finance Agency pursuant to section 1367 of the Federal Housing Enterprises Financial Safety and Soundness Act of 1992 (12 U.S.C. 4617). The special rule under § 1026.43(e)(4)(ii)(A) does not apply if Fannie Mae or Freddie Mac (or any limited-life regulatory entity succeeding the charter of either) has ceased operating under the conservatorship or receivership of the Federal Housing Finance Agency. For example, if either Fannie Mae or Freddie Mac (or succeeding limited-life regulatory entity) ceases to operate under the conservatorship or receivership of the Federal Housing Finance Agency, § 1026.43(e)(4)(ii)(A) would no longer apply to loans eligible for purchase or guarantee by that entity; however, the special rule would be available for a loan that is eligible for purchase or guarantee by the other entity still operating under conservatorship or receivership.

3. *Timing.* Under § 1026.43(e)(4)(iii), the definition of qualified mortgage under § 1026.43(e)(4) applies only to loans for which the creditor receives the consumer's application before the mandatory compliance date of a final rule issued by the Bureau amending § 1026.43(e)(2), regardless of whether Fannie Mae or Freddie Mac (or any limited-life regulatory entity succeeding the charter of either) continues to operate under the conservatorship or receivership of the Federal Housing Finance Agency. Accordingly, § 1026.43(e)(4) is available only for covered transactions:

i. That are consummated on or before the date Fannie Mae or Freddie Mac (or any limited-life regulatory entity succeeding the charter of either), respectively, cease to operate under the conservatorship or receivership of the Federal Housing Finance Agency pursuant to section 1367 of the Federal Housing Enterprises Financial Safety

and Soundness Act of 1992 (12 U.S.C. 4617); and

ii. That are transactions for which the creditor receives the consumer's application before the mandatory compliance date of a final rule issued by the Bureau amending § 1026.43(e)(2), as provided by § 1026.43(e)(4)(iii). The Bureau will also amend this commentary prior to that mandatory compliance date to reflect the new status.

4. *Application.* Under § 1026.43(e)(4)(iii)(B), the special rules in § 1026.43(e)(4)—unless they are otherwise expired under § 1026.43(e)(4)(iii)(A)—are available only for covered transactions for which the creditor receives the consumer's application before the mandatory compliance date of a final rule issued by the Bureau amending paragraph (e)(2) of this section. Under § 1026.2(a)(3)(i), application means the submission of a consumer's financial information for the purposes of obtaining an extension of credit. This definition applies to all transactions covered by Regulation Z. Regulation Z also provides a more specific definition for transactions subject to § 1026.19(e), (f), or (g). For such transactions, an application consists of the submission of the consumer's name, the consumer's income, the consumer's social security number to obtain a credit report, the property address, an estimate of the value of the property, and the mortgage loan amount sought. Therefore, for transactions subject to § 1026.19(e), (f), or (g), creditors determine the date the creditor received the consumer's application, for purposes of § 1026.43(e)(4)(iii)(B), in accordance with § 1026.2(a)(3)(ii). For transactions that are not subject to § 1026.19(e), (f), or (g), creditors can determine the date the creditor received the consumer's application, for purposes of § 1026.43(e)(4)(iii)(B), in accordance with either § 1026.2(a)(3)(i) or (ii).

5. *Eligible for purchase, guarantee, or insurance except with regard to matters wholly unrelated to ability to repay.* To satisfy § 1026.43(e)(4)(ii), a loan need not be actually purchased or guaranteed by Fannie Mae or Freddie Mac or insured or guaranteed by one of the Agencies (the U.S. Department of Housing and Urban Development (HUD), U.S. Department of Veterans Affairs (VA), U.S. Department of Agriculture (USDA), or Rural Housing Service (RHS)). Rather, § 1026.43(e)(4)(ii) requires only that the creditor determine that the loan is eligible (*i.e.,* meets the criteria) for such purchase, guarantee, or insurance at consummation. For example, for purposes of § 1026.43(e)(4), a creditor is not required to sell a loan to Fannie Mae or Freddie Mac (or any limited-life regulatory entity succeeding the charter of either) for that loan to be a qualified mortgage; however, the loan must be eligible for purchase or guarantee by Fannie Mae or Freddie Mac (or any limited-life regulatory entity succeeding the charter of either), including satisfying any requirements regarding consideration and verification of a consumer's income or assets, credit history, debt-to-income ratio or residual income, and other credit risk factors, but not any requirements regarding matters wholly unrelated to ability to repay. To determine eligibility for purchase, guarantee or insurance, a creditor may rely on a valid underwriting recommendation provided by a GSE automated underwriting system (AUS) or an AUS that relies on an Agency underwriting tool; compliance with the standards in the GSE or Agency written guide in effect at the time; a written agreement between the creditor or a direct sponsor or aggregator of the creditor and a GSE or Agency that permits variation from the standards of the written guides and/or variation from the AUSs, in effect at the time of consummation; or an individual loan waiver granted by the GSE or Agency to the creditor. For creditors relying on the variances of a sponsor or aggregator, a loan that is transferred directly to or through the sponsor or aggregator at or after consummation complies with § 1026.43(e)(4). In using any of the four methods listed above, the creditor need not satisfy standards that are wholly unrelated to assessing a consumer's ability to repay that the creditor is required to perform. Matters wholly unrelated to ability to repay are those matters that are wholly unrelated to credit risk or the underwriting of the loan. Such matters include requirements related to the status of the creditor rather than the loan, requirements related to selling, securitizing, or delivering the loan, and any requirement that the creditor must perform after the consummated loan is sold, guaranteed, or endorsed for insurance such as document custody, quality control, or servicing.

Accordingly, a covered transaction is eligible for purchase or guarantee by Fannie Mae or Freddie Mac, for example, if:

i. The loan conforms to the relevant standards set forth in the Fannie Mae Single-Family Selling Guide or the Freddie Mac Single-Family Seller/Servicer Guide in effect at the time, or to standards set forth in a written agreement between the creditor or a sponsor or aggregator of the creditor and Fannie Mae or Freddie Mac in effect at that time that permits variation from the standards of those guides;

ii. The loan has been granted an individual waiver by a GSE, which will allow purchase or guarantee in spite of variations from the applicable standards; or

iii. The creditor inputs accurate information into the Fannie Mae or Freddie Mac AUS or another AUS pursuant to a written agreement between the creditor and Fannie Mae or Freddie Mac that permits variation from the GSE AUS; the loan receives one of the recommendations specified below in paragraphs A or B from the corresponding GSE AUS or an equivalent recommendation pursuant to another AUS as authorized in the written agreement; and the creditor satisfies any requirements and conditions specified by the relevant AUS that are not wholly unrelated to ability to repay, the non-satisfaction of which would invalidate that recommendation:

A. An ''Approve/Eligible'' recommendation from Desktop Underwriter (DU); or

B. A risk class of ''Accept'' and purchase eligibility of ''Freddie Mac Eligible'' from Loan Prospector (LP).

6. *Repurchase and indemnification demands.* A repurchase or indemnification demand by Fannie Mae, Freddie Mac, HUD, VA, USDA, or RHS is not dispositive of qualified mortgage status. Qualified mortgage status under § 1026.43(e)(4) depends on whether a loan is eligible to be purchased, guaranteed, or insured at the time of consummation, provided that other requirements under § 1026.43(e)(4) are satisfied. Some repurchase or indemnification demands are not related to eligibility criteria at consummation. *See* comment 43(e)(4)–4. Further, even where a repurchase or indemnification demand relates to whether the loan satisfied relevant eligibility requirements as of the time of consummation, the mere fact that a demand has been made, or even resolved, between a creditor and GSE or agency is not dispositive for purposes of § 1026.43(e)(4). However, evidence of whether a particular loan satisfied the § 1026.43(e)(4) eligibility criteria at consummation may be brought to light in the course of dealing over a particular demand, depending on the facts and circumstances. Accordingly, each loan should be evaluated by the creditor based on the facts and circumstances relating to the eligibility of that loan at the time of consummation. For example:

i. Assume eligibility to purchase a loan was based in part on the consumer's employment income of $50,000 per year. The creditor uses the income figure in obtaining an approve/eligible recommendation from DU. A quality control review, however, later determines that the documentation provided and verified by the creditor to comply with Fannie Mae requirements did not support the reported income of $50,000 per year. As a result, Fannie Mae demands that the creditor repurchase the loan. Assume that the quality control review is accurate, and that DU would not have issued an approve/eligible recommendation if it had been provided the accurate income figure. The DU determination at the time of consummation was invalid because it was based on inaccurate information provided by the creditor; therefore, the loan was never a qualified mortgage under § 1026.43(e)(4).

ii. Assume that a creditor delivered a loan, which the creditor determined was a qualified mortgage at the time of consummation under § 1026.43(e)(4), to Fannie Mae for inclusion in a particular To-Be-Announced Mortgage-Backed Security (MBS) pool of loans. The data submitted by the creditor at the time of loan delivery indicated that the various loan terms met the product type, weighted-average coupon, weighted-average maturity, and other MBS pooling criteria, and MBS issuance disclosures to investors reflected this loan data. However, after delivery and MBS issuance, a quality control review determines that the loan violates the pooling criteria. The loan still meets eligibility requirements for Fannie Mae products and loan terms. Fannie Mae, however, requires the creditor to repurchase the loan due to the violation of MBS pooling requirements. Assume that the quality control review determination is accurate. Because the loan still meets Fannie Mae's eligibility requirements, it remains a qualified mortgage based on these facts and circumstances.

* * * * *

Dated: October 20, 2020.

Laura Galban,

Federal Register Liaison, Bureau of Consumer Financial Protection.

[FR Doc. 2020–23540 Filed 10–23–20; 8:45 am]

BILLING CODE 4810–AM–P

FEDERAL REGISTER

Vol. 85 Monday,

No. 207 October 26, 2020

Part V

The President

Notice of October 23, 2020—Continuation of the National Emergency With Respect to the Democratic Republic of the Congo

Federal Register
Vol. 85, No. 207
Monday, October 26, 2020

Presidential Documents

Title 3—

The President

Notice of October 23, 2020

Continuation of the National Emergency With Respect to the Democratic Republic of the Congo

On October 27, 2006, by Executive Order 13413, the President declared a national emergency with respect to the situation in or in relation to the Democratic Republic of the Congo and pursuant to the International Emergency Economic Powers Act (50 U.S.C. 1701–1706), ordered related measures blocking the property of certain persons contributing to the conflict in that country. The President took this action to deal with the unusual and extraordinary threat to the foreign policy of the United States constituted by the situation in or in relation to the Democratic Republic of the Congo, which has been marked by widespread violence and atrocities and continues to threaten regional stability. The President took additional steps to address this national emergency in Executive Order 13671 of July 8, 2014.

The situation in or in relation to the Democratic Republic of the Congo continues to pose an unusual and extraordinary threat to the foreign policy of the United States. For this reason, the national emergency declared in Executive Order 13413 of October 27, 2006, as amended by Executive Order 13671 of July 8, 2014, and the measures adopted to deal with that emergency, must continue in effect beyond October 27, 2020. Therefore, in accordance with section 202(d) of the National Emergencies Act (50 U.S.C. 1622(d)), I am continuing for 1 year the national emergency with respect to the situation in or in relation to the Democratic Republic of the Congo declared in Executive Order 13413, as amended by Executive Order 13671.

This notice shall be published in the *Federal Register* and transmitted to the Congress.

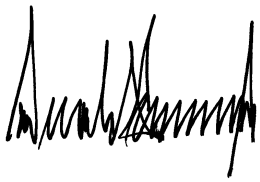

THE WHITE HOUSE,
October 23, 2020.

[FR Doc. 2020–23853
Filed 10–23–20; 11:15 am]
Billing code 3295–F1–P

Reader Aids

Federal Register

Vol. 85, No. 207

Monday, October 26, 2020

CUSTOMER SERVICE AND INFORMATION

Federal Register/Code of Federal Regulations	
General Information, indexes and other finding aids	**202–741–6000**
Laws	**741–6000**
Presidential Documents	
Executive orders and proclamations	**741–6000**
The United States Government Manual	**741–6000**
Other Services	
Electronic and on-line services (voice)	**741–6020**
Privacy Act Compilation	**741–6050**

ELECTRONIC RESEARCH

World Wide Web

Full text of the daily Federal Register, CFR and other publications is located at: **www.govinfo.gov.**

Federal Register information and research tools, including Public Inspection List and electronic text are located at: **www.federalregister.gov.**

E-mail

FEDREGTOC (Daily Federal Register Table of Contents Electronic Mailing List) is an open e-mail service that provides subscribers with a digital form of the Federal Register Table of Contents. The digital form of the Federal Register Table of Contents includes HTML and PDF links to the full text of each document.

To join or leave, go to **https://public.govdelivery.com/accounts/USGPOOFR/subscriber/new**, enter your email address, then follow the instructions to join, leave, or manage your subscription.

PENS (Public Law Electronic Notification Service) is an e-mail service that notifies subscribers of recently enacted laws.

To subscribe, go to **http://listserv.gsa.gov/archives/publaws-l.html and select** *Join or leave the list (or change settings);* then follow the instructions.

FEDREGTOC and **PENS** are mailing lists only. We cannot respond to specific inquiries.

Reference questions. Send questions and comments about the Federal Register system to: **fedreg.info@nara.gov**

The Federal Register staff cannot interpret specific documents or regulations.

FEDERAL REGISTER PAGES AND DATE, OCTOBER

61805–62186 1
62187–62538 2
62539–62920 5
62921–63186 6
63187–63422 7
63423–63992 8
63993–64374 9
64375–64942 13
64943–65186 14
65187–65632 15
65633–66200 16
66201–66468 19
66469–66872 20
66873–67260 21
67261–67426 22
67427–67630 23
67631–67964 26

CFR PARTS AFFECTED DURING OCTOBER

At the end of each month the Office of the Federal Register publishes separately a List of CFR Sections Affected (LSA), which lists parts and sections affected by documents published since the revision date of each title.

2 CFR

910 64943

3 CFR

Proclamations:
10085 62921
10086 62923
10087 62925
10088 62927
10089 62929
10090 62931
10091 63187
10092 63969
10093 63971
10094 63973
10095 64373
10096 65181
10097 65185
10098 65633
10099 65635
10100 65637
10101 65639
10102 66467
10103 67261
10104 67263
Executive Orders:
13951 62179
13952 62187
13953 62539
13954 63977
13955 65643
13956 65647
13957 67631
Administrative Orders:
Memorandums:
Memorandum of October 9, 2020 65631
Notices:
Notice of October 8, 2020 64941
Notice of October 19, 2020 66871
Notice of October 23, 2020 67963
Presidential Permits:
Presidential Permit of September 28, 2020 62191
Permit of October 3, 2020 63981
Permit of October 3, 2020 63985
Permit of October 3, 2020 63989

5 CFR

120 65651
302 63189
315 65940
432 65940
531 65187
752 65940
1631 67265
1650 61805
Proposed Rules:
532 66282
550 63218

6 CFR

5 62933

7 CFR

2 65500
54 62934
56 62934
62 62934
70 62934
90 62934
91 62934
201 65190
301 61806
319 61806
1205 62545
1250 62942
1466 67637
1470 63993
1719 67427
1779 62195
3575 62195
4279 62195
4287 62195
5001 62195
Proposed Rules:
905 63039
927 66283
946 64415
983 62615
984 66491
1280 62617

8 CFR

Ch. I 65653
208 67202
214 63918
1208 67202
Proposed Rules:
213a 62432

9 CFR

56 62559
145 62559
146 62559
147 62559

10 CFR

Ch. I 65656
50 62199
830 66201
Proposed Rules:
50 ..... 62234, 63039, 66498
72 66285
429 67464
430 ..... 64071, 64981, 67312
431 ..... 62816, 67312, 67464

12 CFR

3.....63423, 64003
32.....61809
34.....65666
217.....63423, 64003
225.....65666
252.....63423
323.....65666
324.....63423, 64003
363.....67427
615.....62945
620.....63428
624.....61811
700.....62207
701.....62207
702.....62207
704.....62207
705.....62207
707.....62207
708a.....62207
708b.....62207
709.....62207
717.....62207
722.....64945
725.....62207
740.....62207
741.....62207
747.....62207
748.....62207
750.....62207
1026.....67938

Proposed Rules:

225.....63222
228.....66410
238.....63222
252.....63222
271.....65262
303.....65270
362.....67684
390.....65270, 67684

13 CFR

119.....62950
120.....66214
121.....66146
124.....66146
125.....66146
126.....66146
127.....66146
134.....63191, 66146

Proposed Rules:

121.....62239, 62372

14 CFR

21.....62951
25.....67433, 67435, 67436, 67439
39.....61811, 62975, 62979, 62981, 62990, 62993, 63002, 63193, 63195, 63431, 63434, 63438, 63440, 63443, 64009, 64375, 64949, 64952, 64955, 64958, 64961, 64963, 65190, 65193, 65197, 65200, 65672, 65674, 66469, 66873
61.....62951
63.....62951
65.....62951
71.....62572, 62573, 62575, 62577, 62578, 64014, 64377, 65203, 65677, 67267, 67439, 67441, 67442, 67648, 67649
73.....63007
91.....62951, 65678, 65686
97.....62579, 62580, 65204, 65205
107.....62951
125.....62951
141.....62951

Proposed Rules:

39.....61877, 61879, 61881, 61884, 61886, 61889, 61892, 62266, 62626, 63235, 63238, 63240, 64417, 64419, 64984, 64987, 64993, 64995, 65282, 65285, 66500, 67313, 67465, 67467, 67692, 67694, 67696
71.....62269, 62630, 64422, 64424, 64998, 67315, 67317, 67319, 67320, 67322, 67324, 67325

15 CFR

Ch. VII.....62214
705.....64377
740.....62583
742.....63007, 63009
744.....64014
756.....63011
772.....62583
774.....62583, 63009

Proposed Rules:

742.....64078
774.....64078
1500.....65288

16 CFR

303.....63012
310.....62596

Proposed Rules:

640.....63462
1112.....67906
1130.....67906
1241.....67906

17 CFR

39.....67160
140.....67160
200.....65470
201.....65470
210.....66108
229.....63726, 66108
230.....64234
239.....63726
240.....63726, 64234, 65470
242.....65470
249.....66108

18 CFR

35.....67094
40.....65207

Proposed Rules:

153.....66287
157.....66287
292.....62632, 67699

19 CFR

Ch. I.....67275, 67276
12.....64020

20 CFR

645.....65693
655.....63872
656.....63872

21 CFR

1.....62094
101.....66217
251.....62094
1301.....67278
1308.....62215, 63014
1401.....65694

Proposed Rules:

1.....62632
1300.....62634
1301.....62634
1304.....62634
1306.....62634
1307.....62634

22 CFR

228.....67443

Proposed Rules:

22.....65750
41.....66878

24 CFR

100.....64025

Proposed Rules:

888.....63664
982.....63664
983.....63664
985.....63664

25 CFR

63.....65704

Proposed Rules:

48.....65000

26 CFR

1.....64026, 64040, 64346, 64383, 64386, 66219, 66471
31.....61813, 63019
35.....61813
53.....65526
301.....64386

27 CFR

Proposed Rules:

9.....61895, 61899, 61907, 67469, 67475

28 CFR

0.....67446
50.....63200
68.....63204
541.....66226

29 CFR

1601.....65214
1626.....65214
2200.....65220
2400.....65221
4022.....65224
4902.....63445

Proposed Rules:

102.....64078, 67704
402.....64726
403.....64726
408.....64726
1601.....64079
1626.....64079
2700.....63047
4001.....64425
4901.....64425

30 CFR

1202.....62016
1206.....62016

Proposed Rules:

250.....65904
290.....65904
550.....65904
556.....65904
1206.....62054
1241.....62054

31 CFR

520.....61816
544.....61823
560.....61823

32 CFR

589.....64966

33 CFR

110.....67278
165.....63447, 64394, 67280

Proposed Rules:

117.....66501
127.....62651
165.....66290, 66292
334.....64434

34 CFR

9.....62597
77.....62609

36 CFR

Proposed Rules:

7.....63062

37 CFR

Proposed Rules:

42.....66502
201.....65293

38 CFR

1.....64040
9.....63208

39 CFR

20.....65225

Proposed Rules:

20.....65310
111.....65311
3050.....63473

40 CFR

2.....66230
51.....63394
52.....64044, 64046, 64050, 64966, 64969, 65236, 65706, 65722, 65727, 66240, 66257, 66264, 66484, 66876, 67282, 67651, 67653, 67661
60.....63394, 64398
61.....63394
62.....63447
63.....63394, 64398, 67665
81.....67661
147.....64053
170.....63449
180.....63450, 63453, 65729, 67285, 67288, 67291
271.....67293
423.....64650
1042.....62218

Proposed Rules:

52.....62679, 62687, 63064, 63066, 64084, 64089, 65008, 65013, 65755, 66295, 66296
60.....65774
139.....67818
147.....64437
174.....64308
257.....65015
721.....64280, 65782, 66506

42 CFR

414.....65732
417.....64401

422....64401
423....64401
Proposed Rules:
110....65311

43 CFR

51....67666
420....67294
3000....64056
3500....67671
Proposed Rules:
17....64090

45 CFR

1304....65733
1305....65733
1610....63209
1630....63209
2500....65239

46 CFR

16....61825
310....67299
Proposed Rules:
121....62842
160....62842
169....62842
184....62842
199....62842
540....65020

47 CFR

0....63116, 64404
1....63116, 64061, 64404
2....61825, 64062, 64404
3....64404
9....67447
11....64404
15....64404
20....64404
24....64404
25....64404
27....64404
52....64404
64....64404, 64971, 67447, 67450
67....64404
68....64404
73....61871, 64404, 67303
74....64404
76....63116, 64404
79....64404
80....64404
87....64404
90....64062, 64404
95....64404
97....64062
101....64404
Proposed Rules:
1....65566, 66888
2....66888
27....66888
64....64091, 66512, 67480

48 CFR

Ch. 1....62484, 67612, 67629
1....62485, 67613
2....62485, 67615
3....62485
4....67628
5....62485
6....62485
8....62485, 67617
9....62485, 67615, 67619
10....62485, 67623
12....62485, 67619, 67623
13....62485, 67619
15....62485, 67613
16....62485
17....62485
19....62485, 67615
22....62485, 67626
26....62485
28....67613
29....67623
30....67613
32....62485
36....62485
42....62485, 67613
43....67619
44....67613
50....62485
52....62485, 67615, 67619, 67623, 67626, 67628
53....62485, 67628
204....65733
212....65733
217....65733
252....65733
515....62612
532....61871
538....62612
552....62612
Ch. 7....65734
841....67462
842....67462
852....61872
1503....66266
1552....66266
1845....64069
Proposed Rules:
1....65610
2....65610
3....65610
4....65610
5....65610
6....65610
7....65610
8....65610
9....65610
10....65610
11....65610
12....65610
13....65610
14....65610
15....65610
16....65610, 67327
18....65610
19....65610
22....65610
23....65610
25....65610
26....65610
27....65610
28....65610
29....65610
30....65610
31....65610
32....65610
37....65610
38....65610
39....65610
42....65610
44....65610
46....65610
47....65610
49....65610
52....65610
53....65610
252....65787

49 CFR

213....63362
1570....67681
Proposed Rules:
191....65142
192....65142
1039....62689
1201....62271

50 CFR

17....63764, 63806, 65241
622....64978, 65740, 67309
635....61872, 64411, 65740
648....62613, 63460, 67311, 67683
660....66270
665....63216
679....61875, 62613, 63037, 63038, 64070, 64413, 66280, 67463
Proposed Rules:
17....63474, 64618, 64908, 66906
20....64097
36....64106
300....66513
660....61912, 62492, 66519
665....65336

LIST OF PUBLIC LAWS

This is a continuing list of public bills from the current session of Congress which have become Federal laws. This list is also available online at *https://www.archives.gov/federal-register/laws*.

The text of laws is not published in the **Federal Register** but may be ordered in ''slip law'' (individual pamphlet) form from the Superintendent of Documents, U.S. Government Publishing Office, Washington, DC 20402 (phone, 202–512–1808). The text will also be made available at *https://www.govinfo.gov*. Some laws may not yet be available.

S. 209/P.L. 116–180
Practical Reforms and Other Goals To Reinforce the Effectiveness of Self-Governance and Self-Determination for Indian Tribes Act of 2019 (Oct. 21, 2020; 134 Stat. 857)

S. 881/P.L. 116–181
Promoting Research and Observations of Space Weather to Improve the Forecasting of Tomorrow Act (Oct. 21, 2020; 134 Stat. 882)

S. 1380/P.L. 116–182
Due Process Protections Act (Oct. 21, 2020; 134 Stat. 894)

Last List October 23, 2020

Public Laws Electronic Notification Service (PENS)

PENS is a free email notification service of newly enacted public laws. To subscribe, go to *https://listserv.gsa.gov/cgi-bin/wa.exe?SUBED1=PUBLAWS-L&A=1*

Note: This service is strictly for email notification of new laws. The text of laws is not available through this service. **PENS** cannot respond to specific inquiries sent to this address.